US 20250283739A1

(19) United States

(12) Patent Application Publication

KONO et al.

(10) Pub. No.: US 2025/0283739 A1

(43) Pub. Date: Sep. 11, 2025

(54) **POSITION DETECTION DEVICE**

(71) Applicant: **DENSO CORPORATION**, Kariya-city (JP)

(72) Inventors: **Tsukasa KONO**, Kariya-city (JP); **Atsushi KOBAYASHI**, Kariya-city (JP); **Ryosuke MURAYAMA**, Kariya-city (JP); **Koichiro MATSUMOTO**, Kariya-city (JP); **Tatsuaki SUGITO**, Kariya-city (JP)

(21) Appl. No.: **19/214,476**

(22) Filed: **May 21, 2025**

Related U.S. Application Data

(63) Continuation of application No. PCT/JP2023/039461, filed on Nov. 1, 2023.

(30) **Foreign Application Priority Data**

Nov. 25, 2022 (JP) 2022-188428

Publication Classification

(51) **Int. Cl.**
G01D 5/20 (2006.01)

(52) **U.S. Cl.**
CPC *G01D 5/2053* (2013.01)

(57) **ABSTRACT**

A position detection device includes a first target that reciprocates in a predetermined movement direction, a second target that reciprocates together with the first target in the movement direction, and a substrate. The substrate is disposed on one side of the substrate in a normal direction with respect to the first and second targets, and has a first receiver coil and a second receiver coil that output a detection signal according to a position of the first target by electromagnetic induction. The substrate has a third receiver coil and a fourth receiver coil that output a detection signal according to a position of the second target by electromagnetic induction. A first receiving area occupied by the first and second receiver coils in the substrate, and a second receiving area occupied by the third and fourth receiver coils in the substrate are arranged side by side in the movement direction.

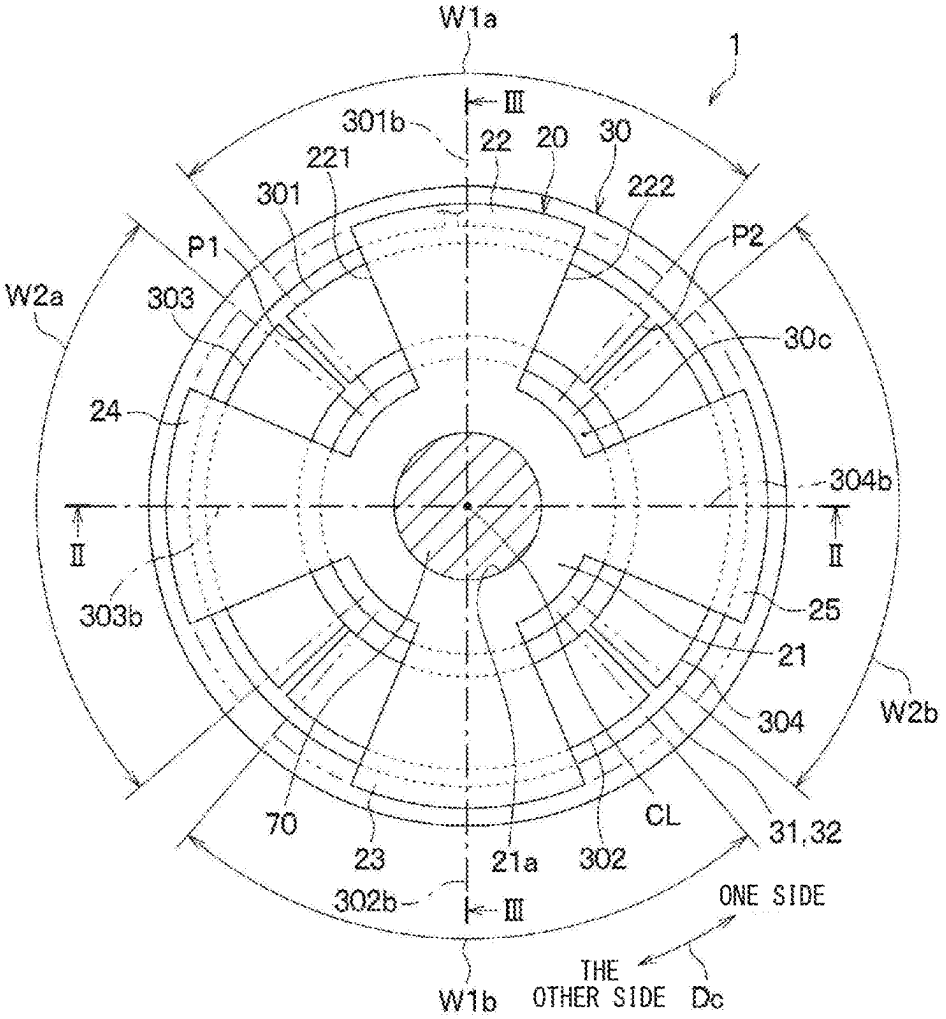

FIG. 1

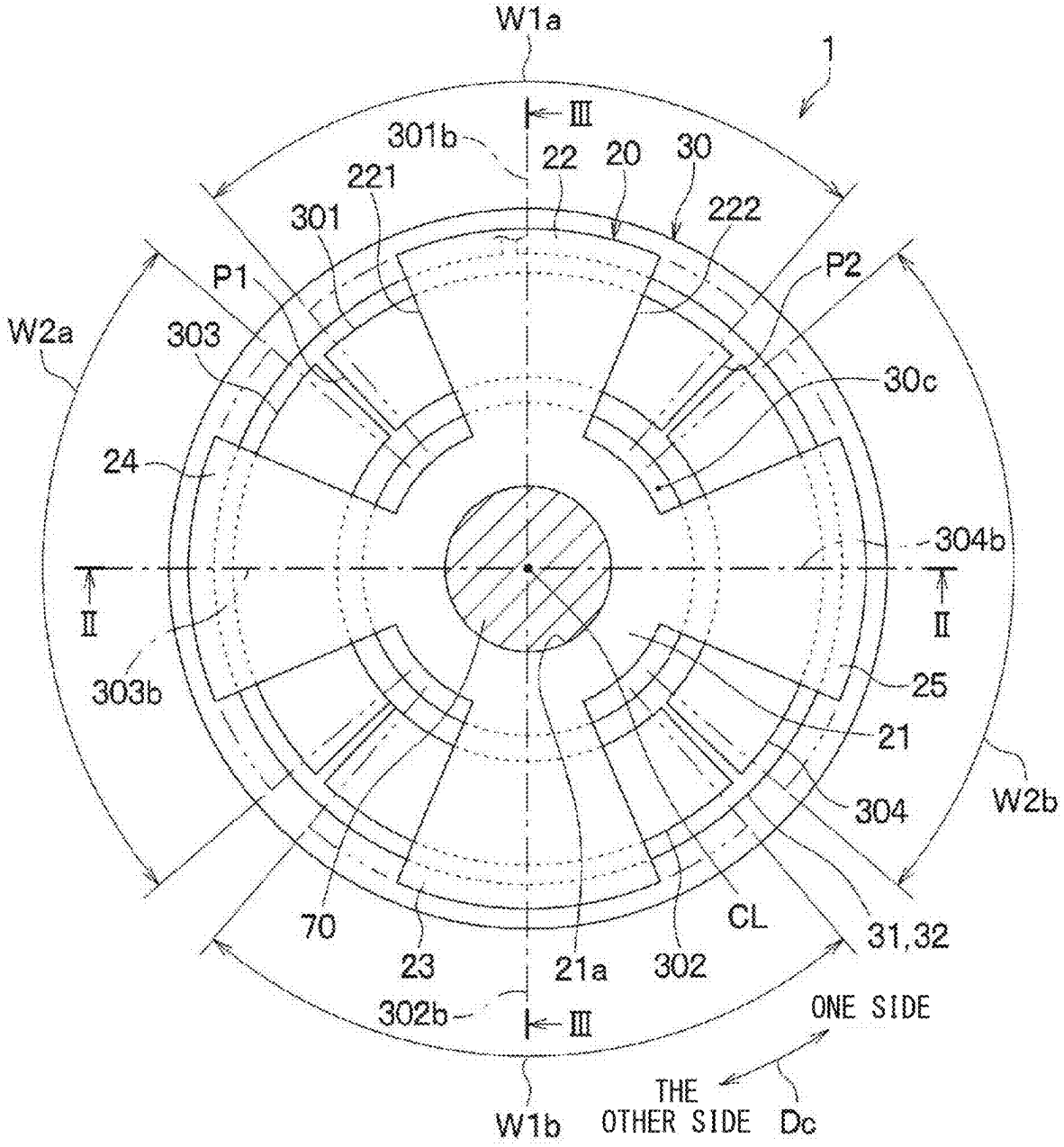
W1a
1
III
301b
22
20
30
221
222
301
P1
P2
W2a
303
30c
24
304b
II
II
303b
25
21
304
W2b
70
CL
31,32
23
21a
302
302b
III
ONE SIDE
THE
OTHER SIDE
Dc
W1b

FIG. 2

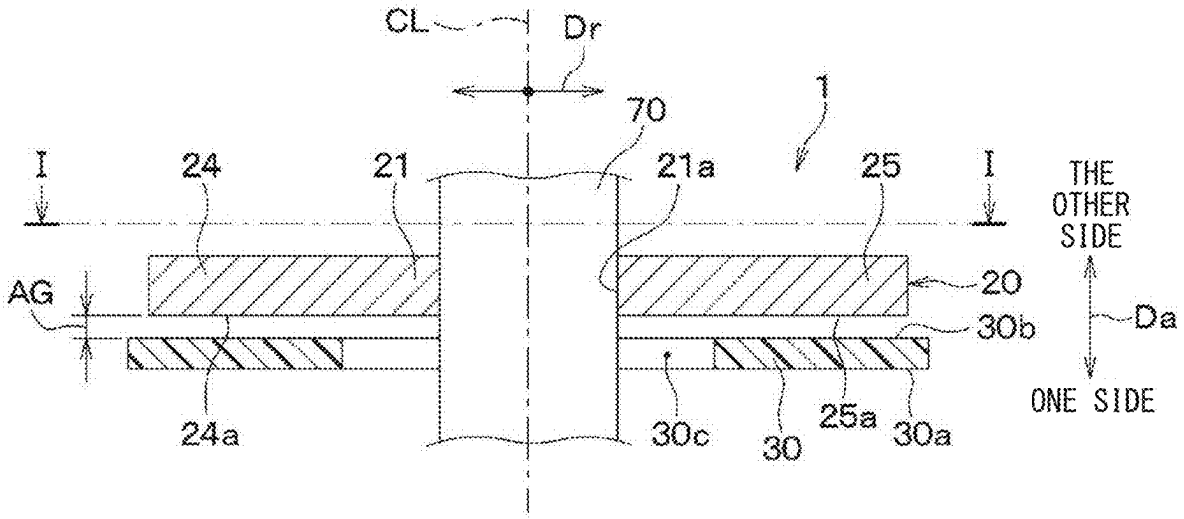
CL
Dr
70
1
I
24
21
21a
25
I
THE OTHER SIDE
AG
20
30b
Da
24a
30c
30
25a
30a
ONE SIDE

FIG. 3

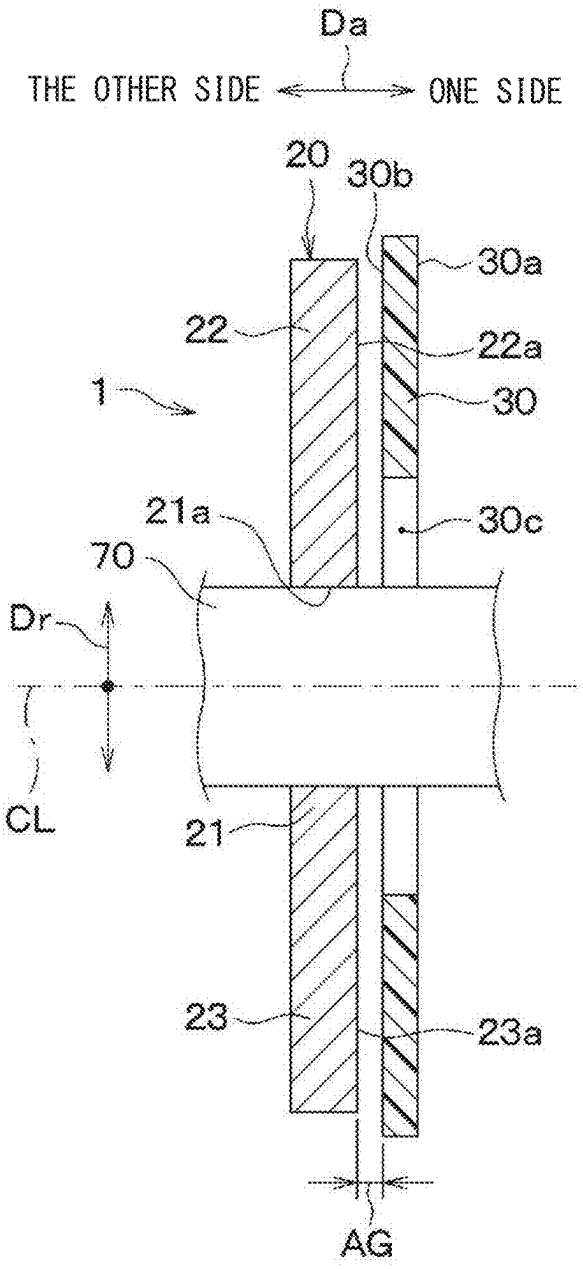
Da
THE OTHER SIDE
ONE SIDE
20
30b
30a
22
22a
1
30
21a
30c
70
Dr
CL
21
23
23a
AG

FIG. 4

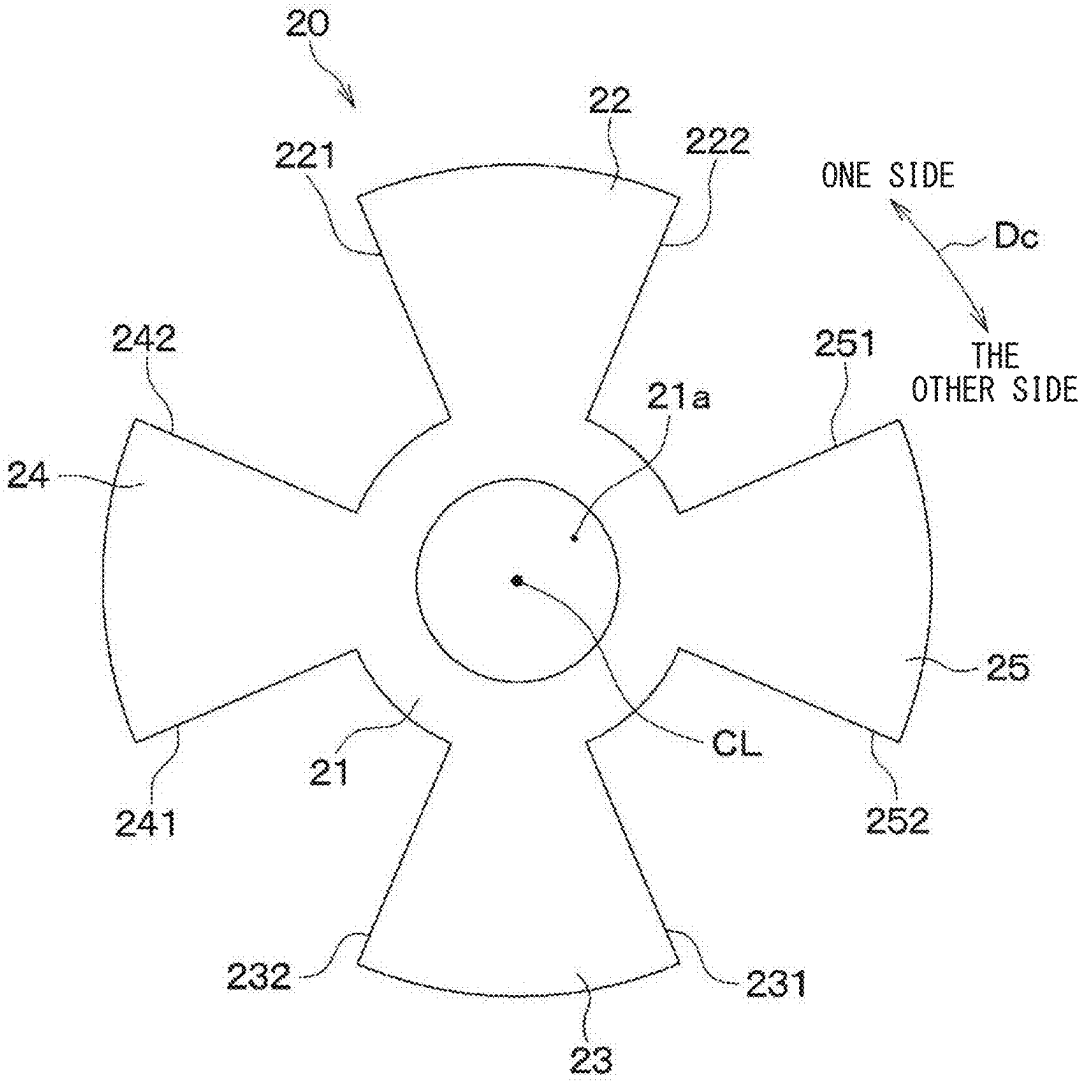
20
22
221
222
ONE SIDE
Dc
THE
OTHER SIDE
242
251
21a
24
25
CL
21
241
252
232
231
23

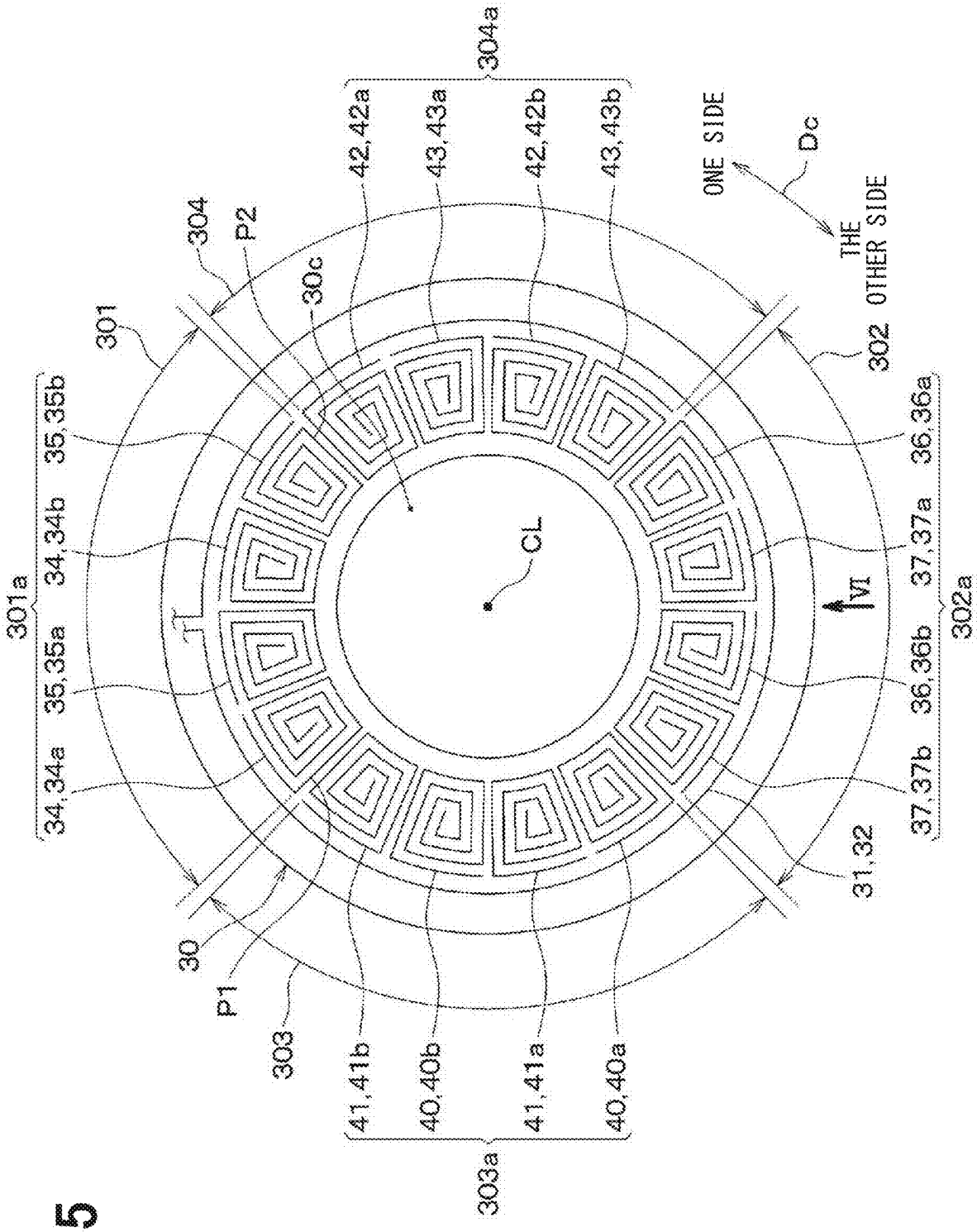
304a
42,42a
43,43a
42,42b
43,43b
ONE SIDE
Dc
THE OTHER SIDE
304
P2
30c
301
302
301a
35,35b
34,34b
35,35a
34,34a
36,36a
37,37a
36,36b
37,37b
302a
CL
VI
31,32
30
P1
303
41,41b
40,40b
41,41a
40,40a
303a

FIG. 5

FIG. 6

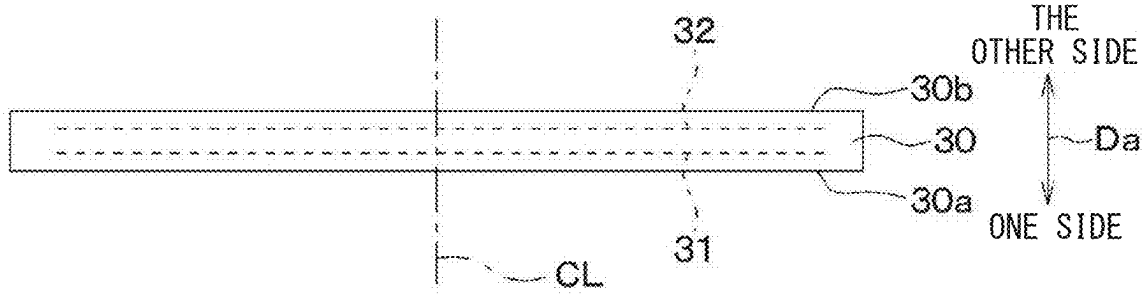
32
THE
OTHER SIDE
30b
30
Da
30a
ONE SIDE
31
CL

FIG. 7

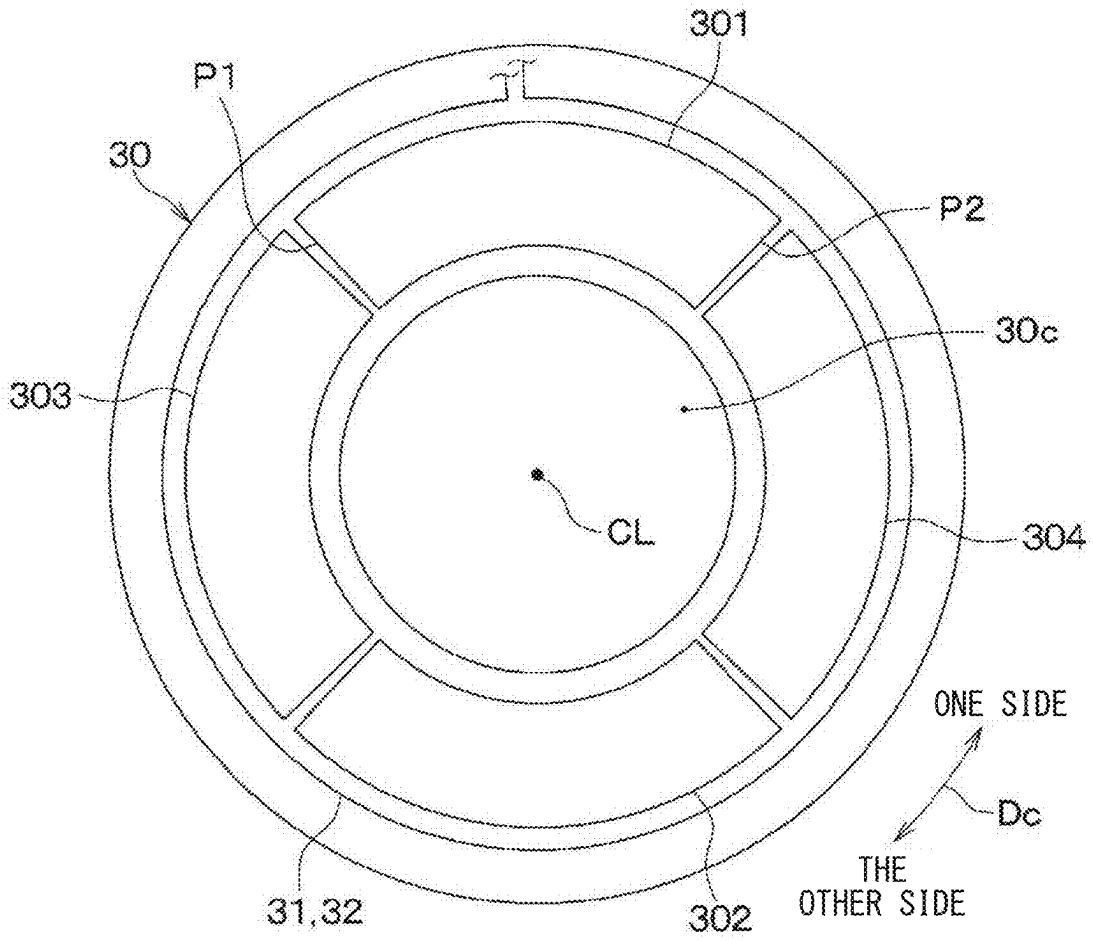
301
P1
30
P2
30c
303
CL
304
ONE SIDE
Dc
THE
OTHER SIDE
31,32
302

FIG. 8

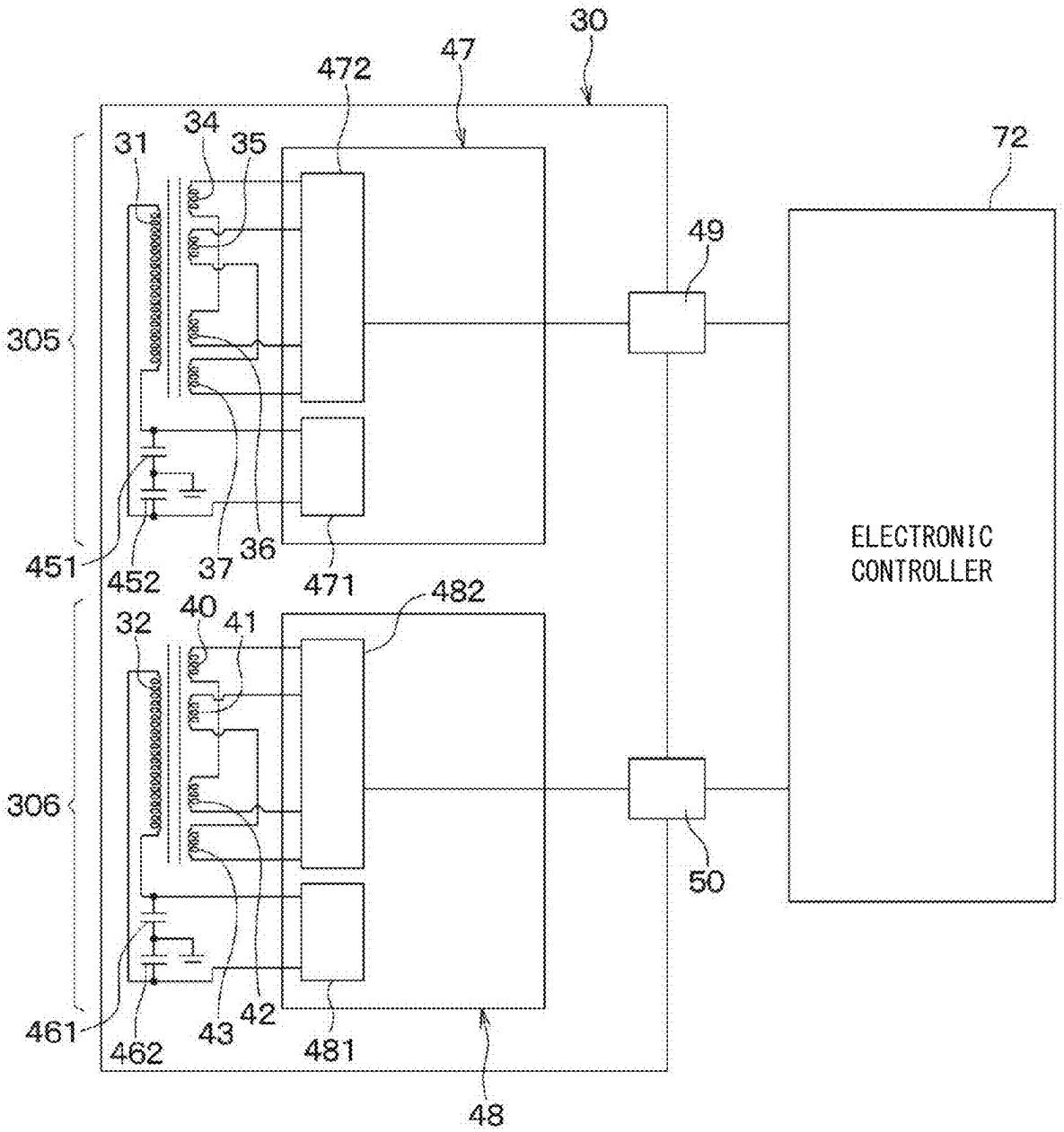
30
47
472
31
34
35
72
49
305
451
452
37
36
471
ELECTRONIC
CONTROLLER
482
32
40
41
306
50
461
462
43
42
481
48

FIG. 9

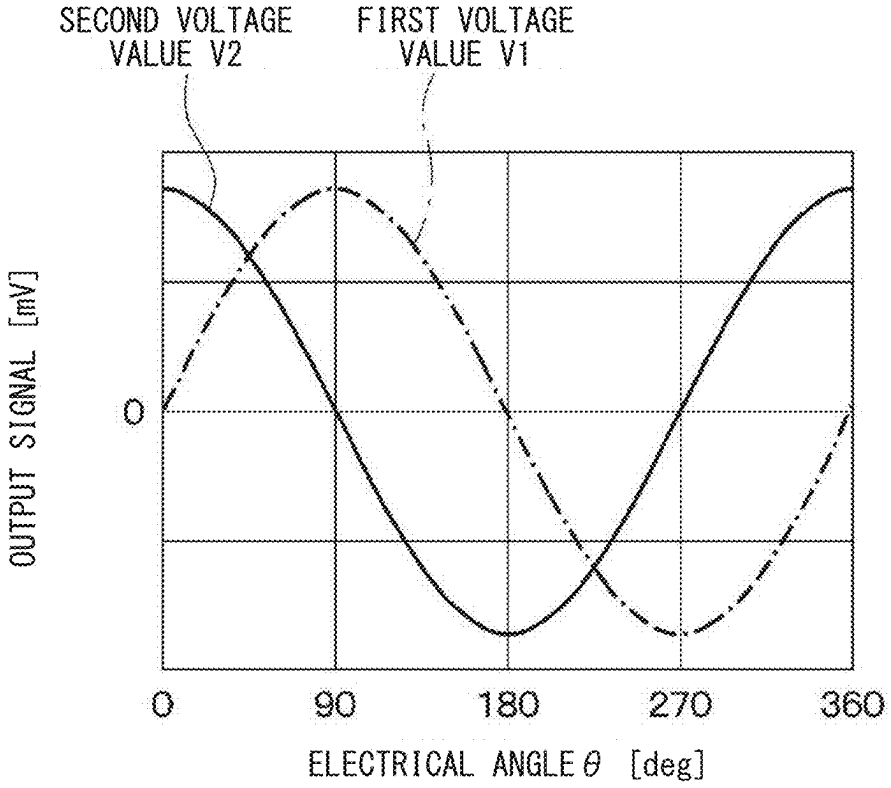
SECOND VOLTAGE VALUE V2
FIRST VOLTAGE VALUE V1
OUTPUT SIGNAL [mV]
0
0
90
180
270
360
ELECTRICAL ANGLE θ [deg]

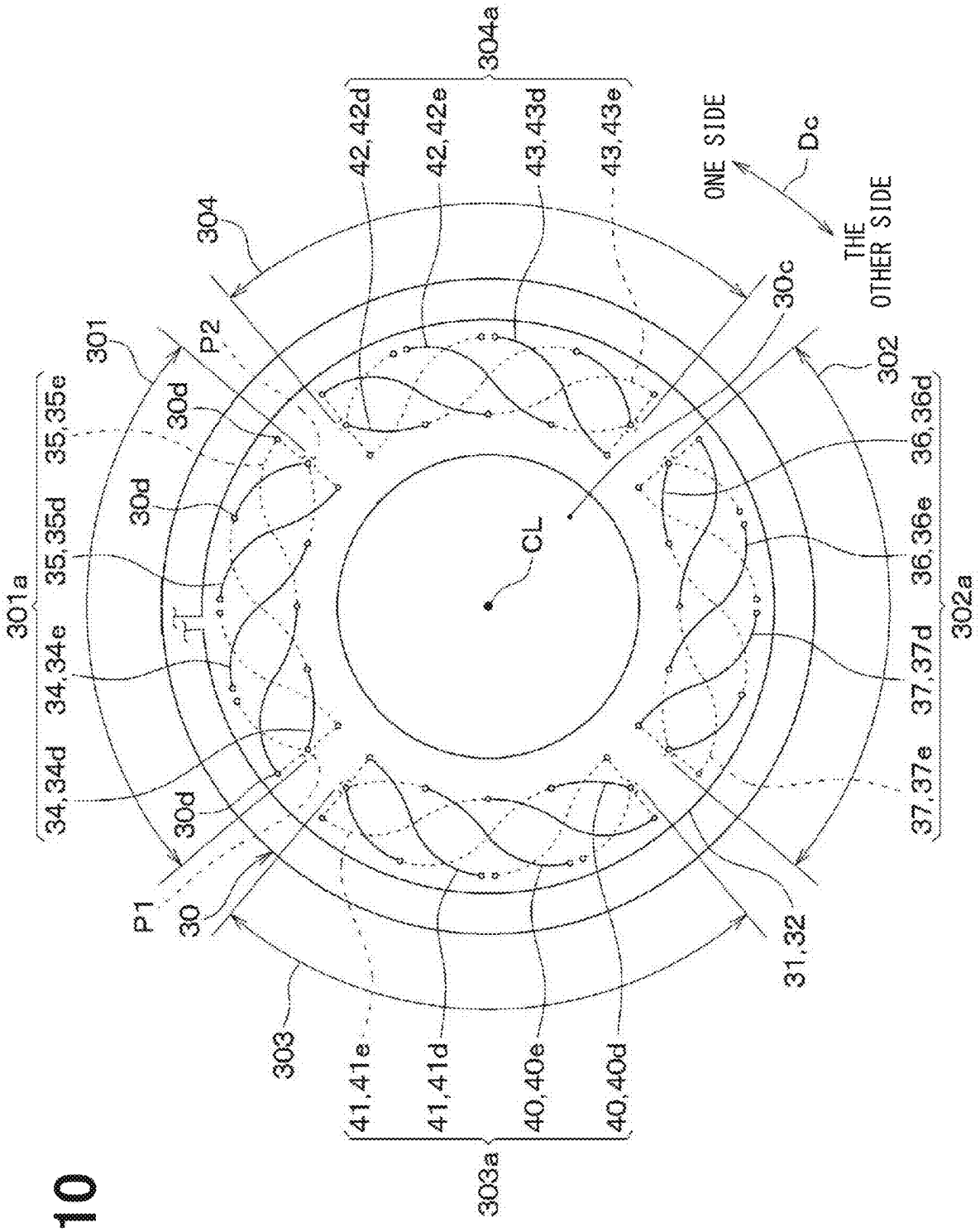
304a
42,42d
42,42e
43,43d
43,43e
ONE SIDE
Dc
THE OTHER SIDE
304
30c
301
P2
302
35,35e
30d
36,36d
30d
35,35d
CL
36,36e
301a
302a
34,34e
37,37d
34,34d
37,37e
30d
P1
30
31,32
303
41,41e
41,41d
40,40e
40,40d
303a

FIG. 10

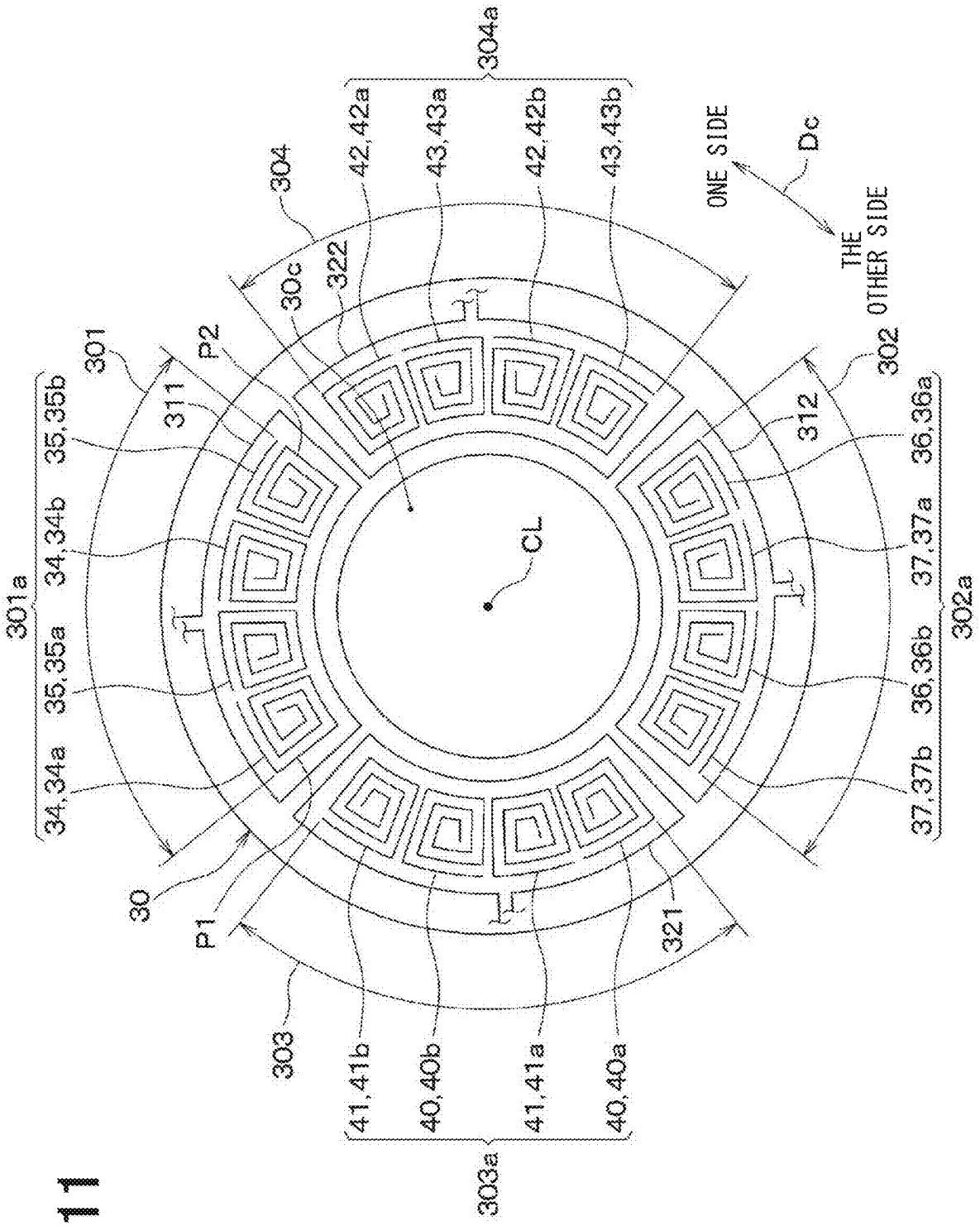
304a
42,42a
43,43a
42,42b
43,43b
304
30c
322
ONE SIDE
Dc
THE OTHER SIDE
301
P2
311
302
312
35,35b
36,36a
34,34b
37,37a
CL
301a
35,35a
36,36b
302a
34,34a
37,37b
30
P1
321
303
41,41b
40,40b
41,41a
40,40a
303a

FIG. 11

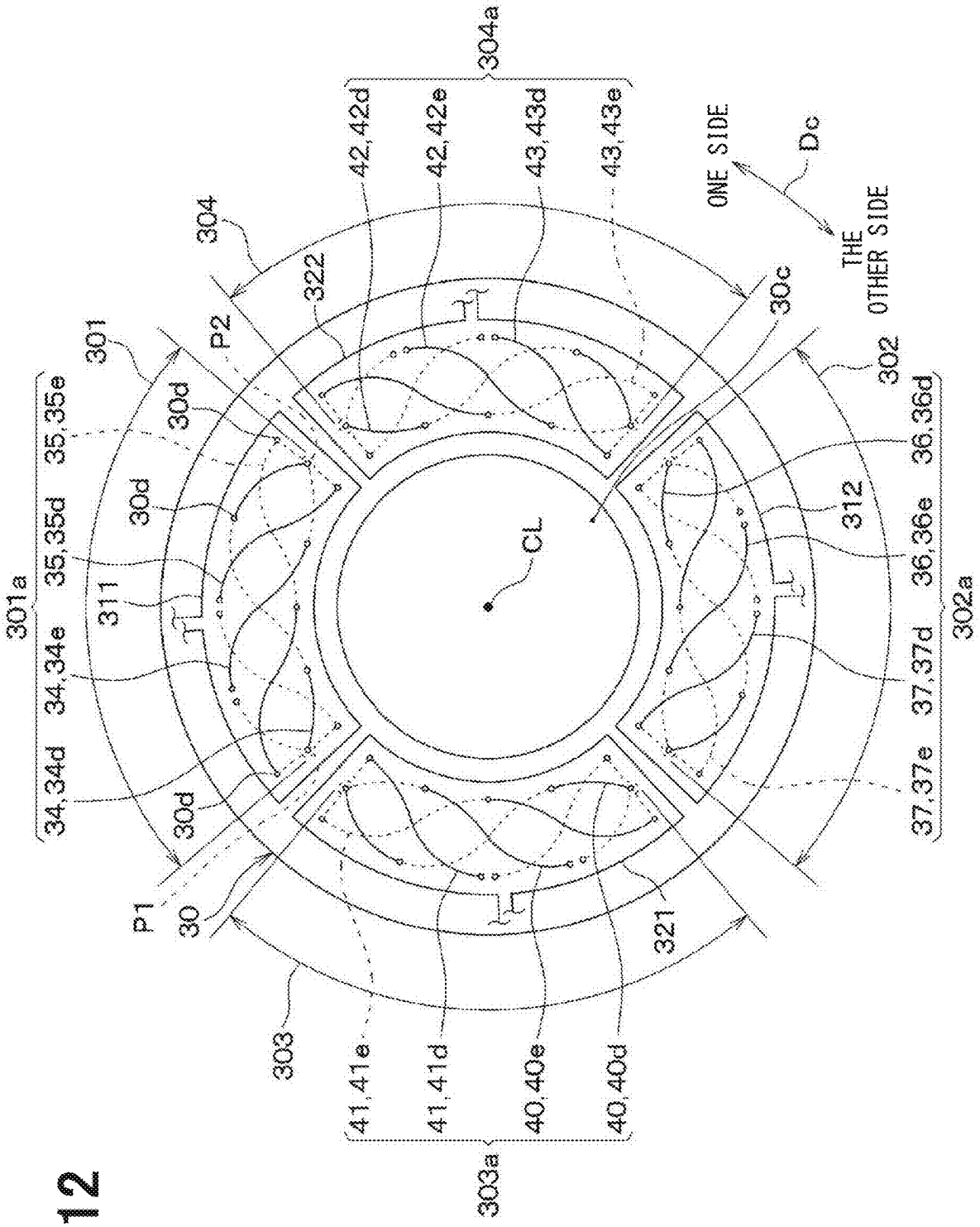
304a
42,42d
42,42e
43,43d
43,43e
ONE SIDE
Dc
THE OTHER SIDE
304
322
30c
302
301
P2
35,35e
30d
36,36d
35,35d
30d
312
36,36e
CL
301a
311
34,34e
37,37d
302a
34,34d
30d
37,37e
P1
30
321
303
41,41e
41,41d
40,40e
40,40d
303a

FIG. 12

FIG. 13

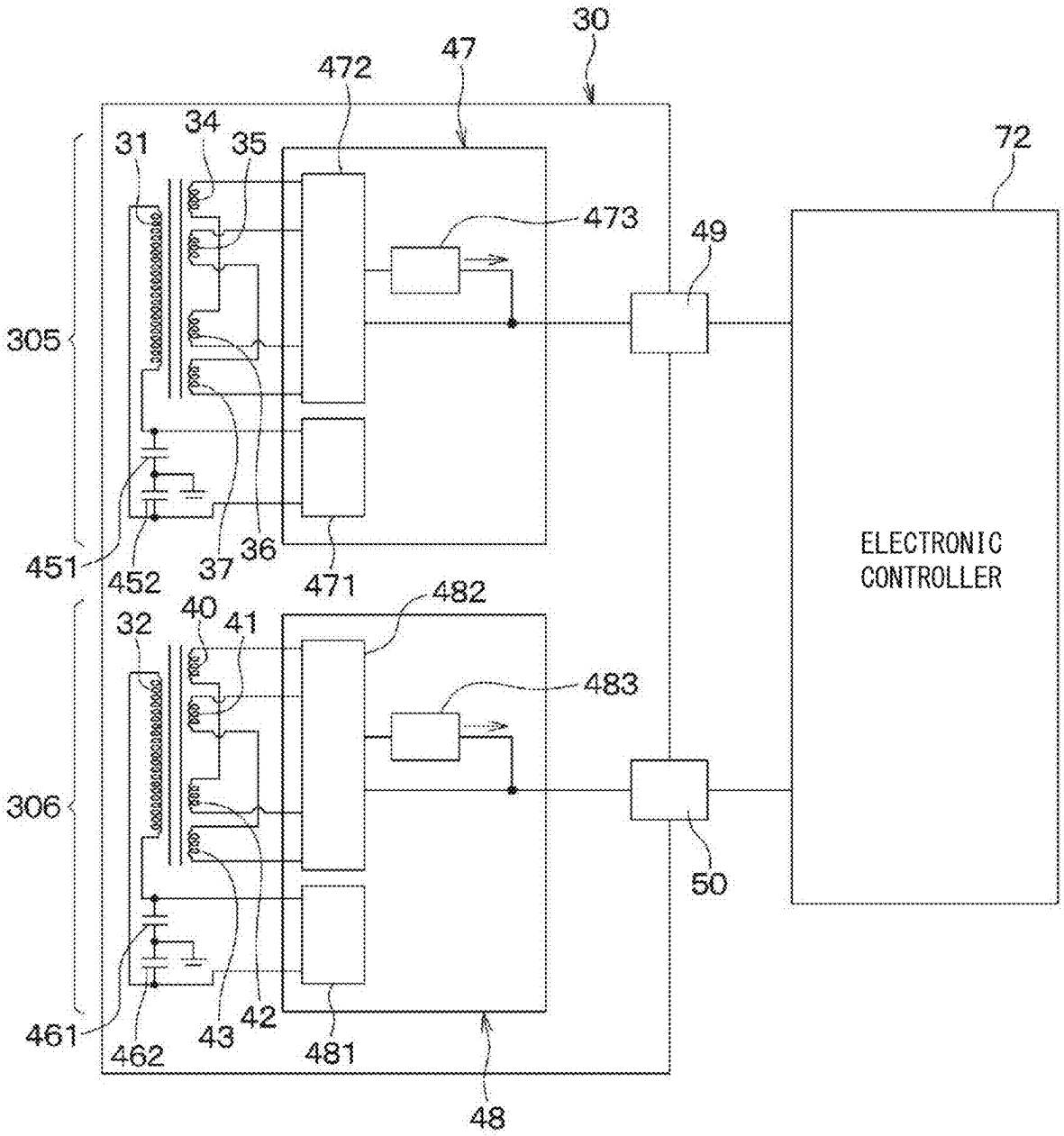
30
47
472
31
34
35
72
473
49
305
451
452
37
36
471
ELECTRONIC
CONTROLLER
482
32
40
41
483
306
50
461
462
43
42
481
48

FIG. 14

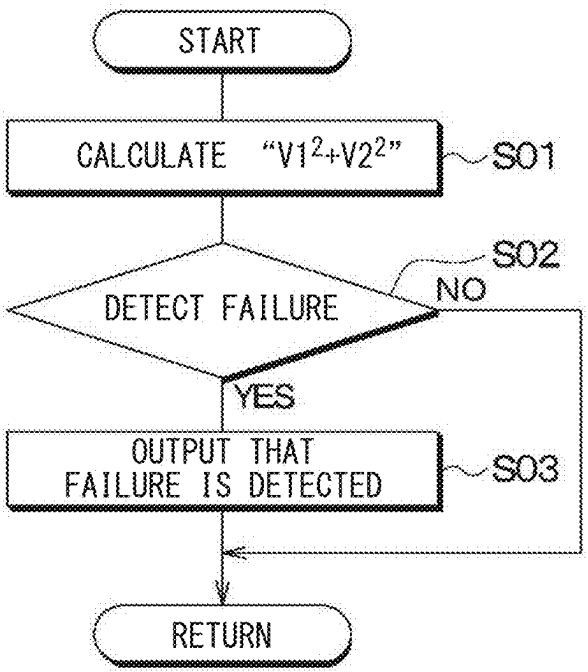
START
CALCULATE "V1²+V2²"
S01
DETECT FAILURE
S02
NO
YES
OUTPUT THAT FAILURE IS DETECTED
S03
RETURN

FIG. 15

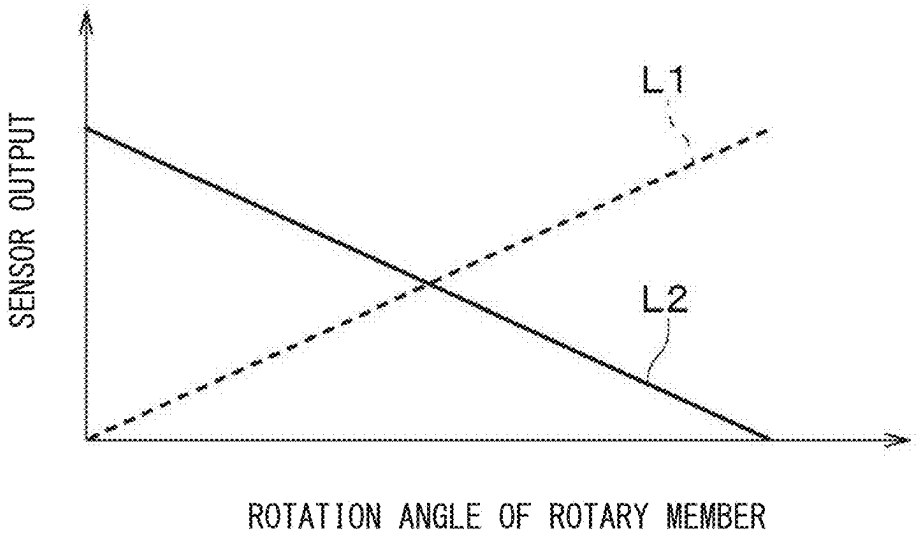
SENSOR OUTPUT
L1
L2
ROTATION ANGLE OF ROTARY MEMBER

FIG. 16

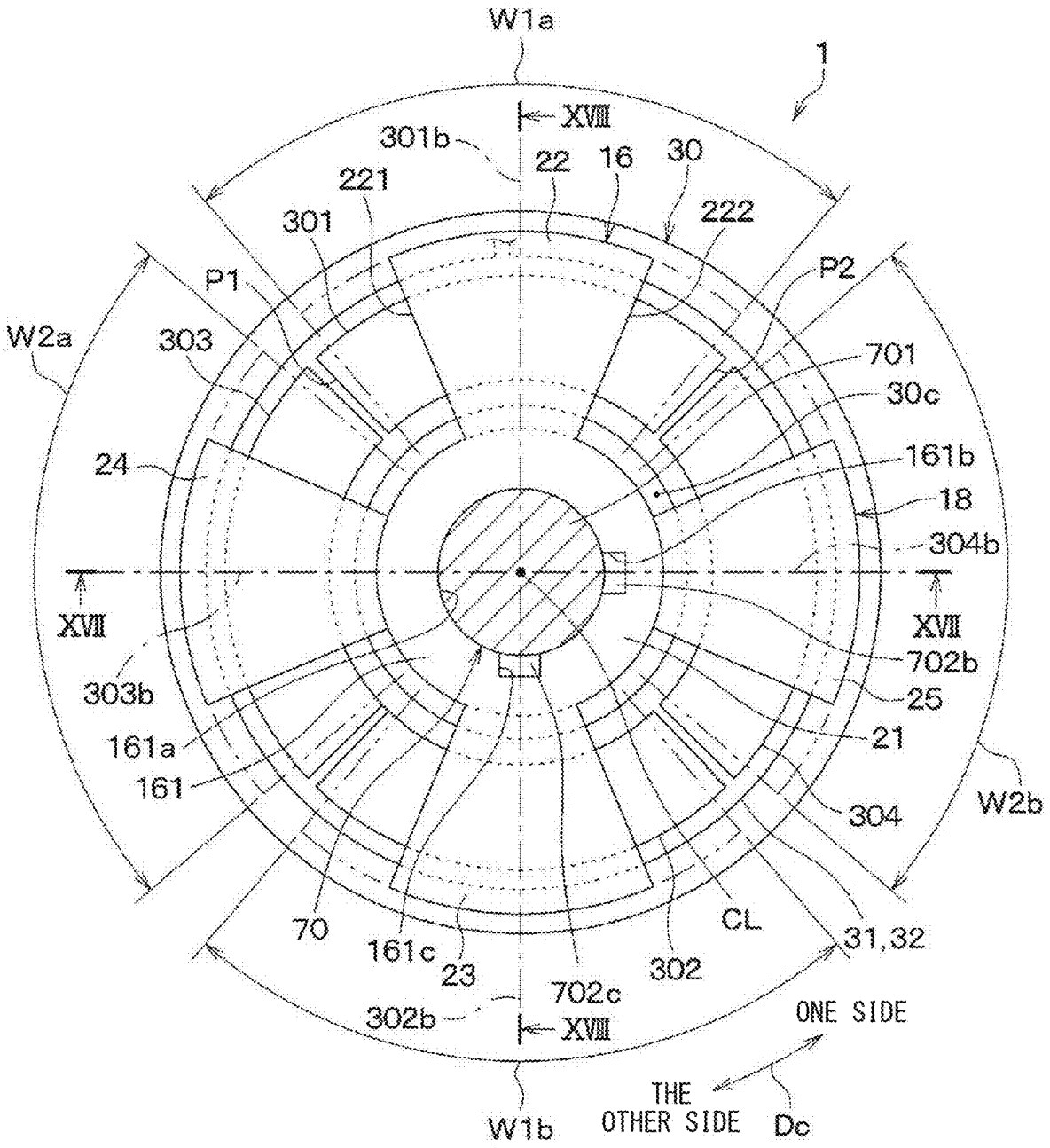
W1a
1
XVIII
301b
22
16
30
221
222
301
P1
P2
W2a
303
701
30c
24
161b
18
304b
XVII
XVII
702b
303b
25
161a
21
161
304
W2b
70
161c
23
CL
31,32
302
702c
302b
XVIII
ONE SIDE
THE OTHER SIDE
Dc
W1b

FIG. 17

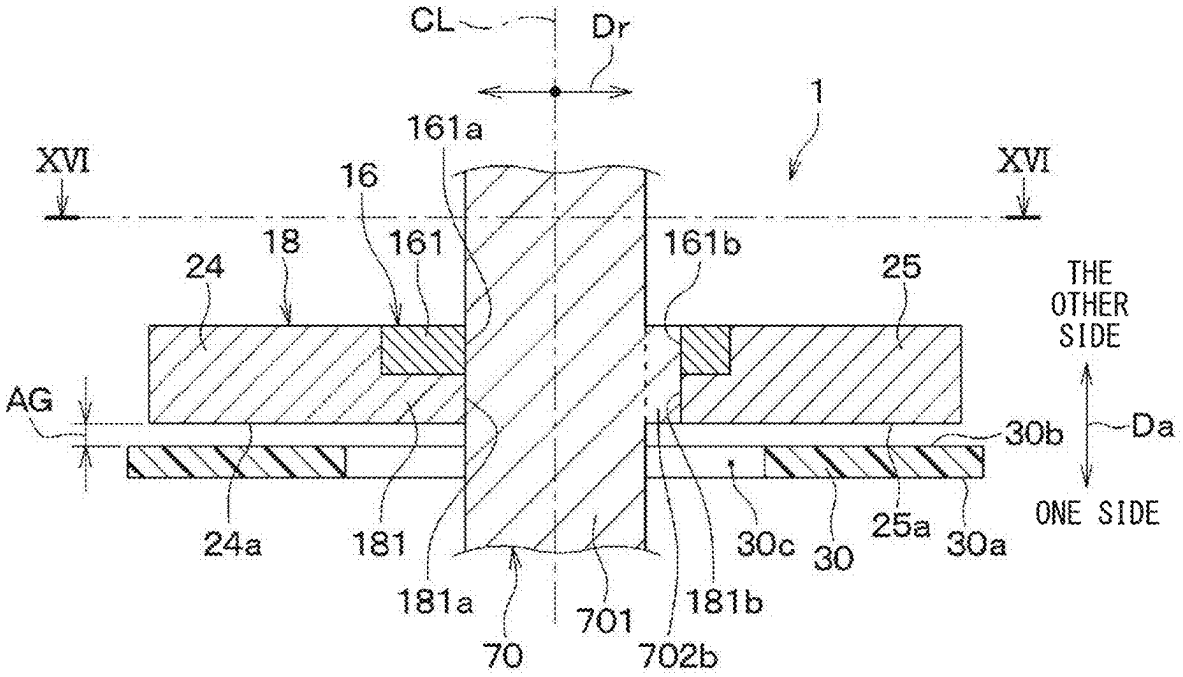
CL
Dr
1
161a
XVI
XVI
16
18
161
161b
24
25
THE OTHER SIDE
AG
30b
Da
24a
181
30c
30
25a
30a
ONE SIDE
181a
701
181b
70
702b

FIG. 18

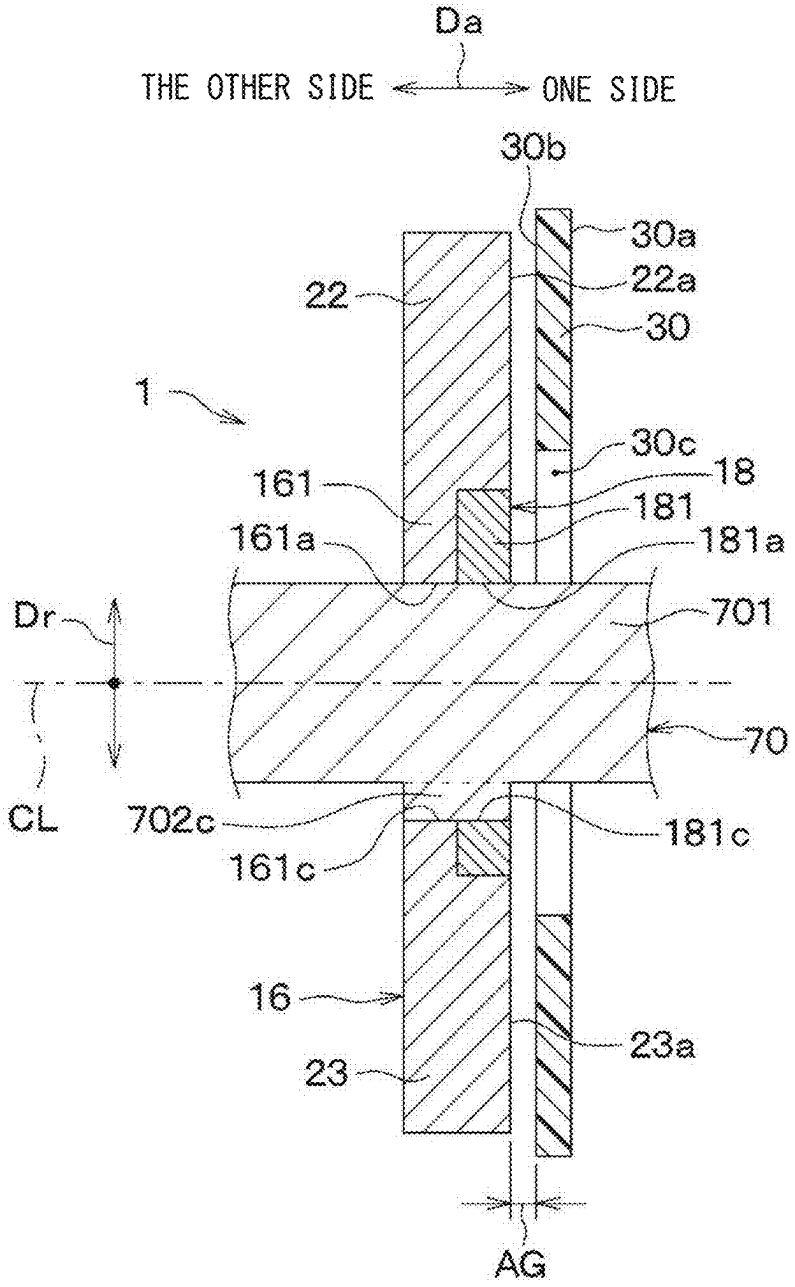
Da
THE OTHER SIDE
ONE SIDE
30b
30a
22a
22
30
1
30c
18
161
181
161a
181a
Dr
701
70
CL
702c
181c
161c
16
23a
23
AG

POSITION DETECTION DEVICE

CROSS REFERENCE TO RELATED APPLICATIONS

[0001] This application is a continuation application of International Patent Application No. PCT/JP2023/039461 filed on Nov. 1, 2023, which designated the U.S. and based on and claims the benefits of priority of Japanese Patent Application No. 2022-188428 filed on Nov. 25, 2022. The entire disclosure of all of the above applications is incorporated herein by reference.

TECHNICAL FIELD

[0002] The present disclosure relates to a position detection device.

BACKGROUND

[0003] As this type of position detection device, for example, an angular position sensor is conventionally known.

SUMMARY

[0004] The present disclosure provides the position detection device in order to reduce an influence by a target.

[0005] In order to achieve the above object, according to one aspect of the present disclosure, a position detection device includes a first target that reciprocates in a predetermined movement direction, a second target that reciprocates in the movement direction together with the first target, and a substrate having a first transmitter coil and a second transmitter coil, a first receiver coil and a second receiver coil that generate induced currents through electromagnetic induction caused by an energization of the first transmitter coil, outputting detection signals corresponding to a position of the first target, and a third receiver coil and a fourth receiver coil generate induced currents through electromagnetic induction caused by an energization of the second transmitter coil, outputting detection signals corresponding to a position of the second target. The substrate is disposed to face both the first target and the second target, with a normal direction defined as a direction intersecting the movement direction, and on one side of the normal direction relative to the first target and the second target.

[0006] A first receiving area occupied by the first receiver coil and the second receiver coil in the substrate, and a second receiving area occupied by the third receiver coil and the fourth receiver coil in the substrate are arranged side by side in the movement direction.

[0007] The first target reciprocates within a movement range in which the first target does not overlap with the other side of the normal direction with respect to the second receiving area.

BRIEF DESCRIPTION OF DRAWINGS

[0008] FIG. **1** is a schematic diagram illustrating a position detection device, viewed along a member axial direction, according to a first embodiment;

[0009] FIG. **2** is a cross-sectional view taken along a line II-II of FIG. **1**, showing a vertical cross section of the position detection device;

[0010] FIG. **3** is a cross-sectional view taken along a line III-III of FIG. **1**, showing a vertical cross section of the position detection device in a different orientation from in FIG. **2**;

[0011] FIG. **4** is a top view illustrating only a rotary member of the position detection device according to the first embodiment;

[0012] FIG. **5** is a diagram illustrating a substrate of the position detection device and schematically illustrating each coil in the substrate according to the first embodiment;

[0013] FIG. **6** is a view in a direction indicated by an arrow VI of FIG. **5**, schematically illustrating each transmitter coil in the substrate;

[0014] FIG. **7** is a schematic diagram corresponding to FIG. **5**, in which receiver coils shown in FIG. **5** is replaced by receiving areas formed by the receiver coils;

[0015] FIG. **8** is a block diagram of the position detection device according to the first embodiment;

[0016] FIG. **9** is a diagram illustrating an example of a waveform of a first voltage value output from the first receiver coil and a waveform of a second voltage value output from the second receiver coil in the first embodiment;

[0017] FIG. **10** is a diagram illustrating a substrate of a position detection device according to a second embodiment, schematically illustrating each coil in the substrate, and corresponding to FIG. **5**;

[0018] FIG. **11** is a diagram illustrating a substrate of a position detection device according to a third embodiment, schematically illustrating each coil in the substrate, and corresponding to FIG. **5**;

[0019] FIG. **12** is a diagram illustrating a substrate of a position detection device according to a fourth embodiment, schematically illustrating each coil in the substrate, and corresponding to FIG. **5**;

[0020] FIG. **13** is a block diagram of a position detection device according to a fifth embodiment, and corresponding to FIG. **8**;

[0021] FIG. **14** is a flowchart showing a control processing executed by a first failure detection unit in a fifth embodiment;

[0022] FIG. **15** is a diagram showing a relationship between the first sensor output and the second sensor output and the rotation angle of a rotary member in a first comparative example to be compared with the fifth embodiment;

[0023] FIG. **16** is a schematic diagram showing a schematic configuration of a position detection device according to a sixth embodiment, viewed in a direction along an axial direction of a member, and corresponding to FIG. **1**;

[0024] FIG. **17** is a cross-sectional view taken along a line XVII-XVII of FIG. **16**, and corresponding to FIG. **2**; and

[0025] FIG. **18** is a cross-sectional view taken along a line XVIII-XVIII of FIG. **16**, and corresponding to FIG. **3**.

DETAILED DESCRIPTION

[0026] In an assumable example, as a type of position detection device, an angular position sensor is conventionally known. The angular position sensor utilizes electromagnetic induction to detect a rotational position of a detection object that rotates around an axis (a rotary shaft center). For this reason, the angular position sensor includes two coil combinations each consisting of a transmitter coil that generates an AC magnetic field and two receiver coils arranged inside the transmitter coil.

[0027] In the example, the object to be detected (detection object), whose rotational position is detected by the angular position sensor, rotates one or more revolutions around the rotary shaft center, but depending on the application, it is also expected that the detection object may reciprocate within a limited operating range. In order to achieve redundancy in such a case, the present disclosers have devised the following configuration. In other words, the disclosers devised a configuration in which a first target and a second target are provided on the detection object, and the position detection device is equipped with a receiver coil for detecting the position of the first target and a receiver coil for detecting the position of the second target, respectively.

[0028] However, in such a configuration devised by the disclosers, there is a concern that one of the first target and the second target may affect the output value of the receiver coil used to detect the position of the other target. As a result of detailed studies by the disclosers, the above has been found.

[0029] In consideration of the above, the present disclosure aims to reduce the influence of the first target on the output value of the receiver coil for detecting a position of the second target in the position detection device that detects the position of the first target and the position of the second target, respectively.

[0030] In order to achieve the above object, according to one aspect of the present disclosure, a position detection device includes a first target that reciprocates in a predetermined movement direction, a second target that reciprocates in the movement direction together with the first target, and a substrate having a first transmitter coil and a second transmitter coil, a first receiver coil and a second receiver coil that generate induced currents through electromagnetic induction caused by an energization of the first transmitter coil, outputting detection signals corresponding to a position of the first target, and a third receiver coil and a fourth receiver coil generate induced currents through electromagnetic induction caused by an energization of the second transmitter coil, outputting detection signals corresponding to a position of the second target. The substrate is disposed to face both the first target and the second target, with a normal direction defined as the direction intersecting the movement direction, and on one side of the normal direction relative to the first target and the second target.

[0031] A first receiving area occupied by the first receiver coil and the second receiver coil in the substrate, and a second receiving area occupied by the third receiver coil and the fourth receiver coil in the substrate are arranged side by side in the movement direction.

[0032] The first target reciprocates within a movement range in which the first target does not overlap with the other side of the normal direction with respect to the second receiving area.

[0033] In this way, it is possible to prevent the first one-side target from interfering with the magnetic flux passing through the third and fourth receiver coils for detecting the positions of the second targets. Therefore, it is possible to reduce the influence of the first one-side target on each output value (i.e., each detection signal) of the third and fourth receiver coils.

[0034] Hereinafter, embodiments are described with reference to the drawings. In the following embodiments, the same reference numeral is given to the same or equivalent parts in the drawings.

First Embodiment

[0035] The present embodiment describes an example in which a position detection device **1** is used to detect a rotational position of a brake pedal or accelerator pedal of a vehicle pedal device. In the following description, the brake pedal or accelerator pedal may be referred to simply as a pedal.

[0036] As shown in FIGS. **1** to **3**, the position detection device **1** in the present embodiment has a rotary member **20** and a substrate **30**. A rotary shaft center CL shown in FIGS. **1** to **3** is the center of rotation of a rotary shaft **70** of the pedal and the rotary member **20**. In the description of the present embodiment, an axial direction Da of the rotary shaft center CL is also referred to as a member axial direction Da, a radial direction Dr of the rotary shaft center CL is also referred to as a member radial direction Dr, and a circumferential direction Dc of the rotary shaft center CL is also referred to as a member circumferential direction Dc. These directions Da, Dr and Dc are directions which cross each other, and are, strictly speaking, directions which are perpendicular to each other. FIG. **1** is a cross-sectional view taken along a line I-I of FIG. **2**.

[0037] The rotary member **20** is made of metal and is formed as a flat plate having a thickness in the member axial direction Da. As shown in FIGS. **1** to **4**, the rotary member **20** is couple to the rotary shaft **70** of the pedal to be rotated together without relative rotation. For example, the rotary member **20** may be made non-rotatable relative to the rotary shaft **70** through a detent key member, or it may be made non-rotatable by being welded to the rotary shaft **70**.

[0038] The rotary member **20** is supported by the non-rotary member via the rotary shaft **70** so that the rotary member **20** is rotatable about the predetermined rotary shaft center CL, and rotates together with the pedal and the rotary shaft **70**. Therefore, a rotational position of the pedal can be detected by detecting a rotational position of the rotary member **20**. In other words, the rotational position of the rotary member **20** is also the rotational position of the pedal and the rotational position of the rotary shaft **70** that is a detection object.

[0039] Since the rotary member **20** is coupled to the rotary shaft **70** of the pedal, the rotary member **20** does not rotate once around the rotary shaft center CL, but rather reciprocates within a predetermined angular range around the rotary shaft center CL as the pedal is depressed. In FIG. **1**, a part of the outline of each target **22**, **23**, **24**, **25** of the rotary member **20** at its end position in its reciprocating motion is illustrated by a dash-dot-dot line.

[0040] The rotary member **20** includes a connecting portion **21**, two first targets **22** and **23**, and two second targets **24** and **25**. That is, the two first targets **22** and **23** and the two second targets **24** and **25** included in that rotary member **20** rotate together around the rotary shaft center CL. The two first targets **22** and **23** and the two second targets **24** and **25** both reciprocate in the member circumferential direction Dc according to depressing of the pedal. The member circumferential direction Dc corresponds to a predetermined direction of movement in the present embodiment.

[0041] For example, the rotary member **20** is configured as a single component including the connecting portion **21**, two first targets **22** and **23**, and two second targets **24** and **25**. For example, the rotary member **20** is formed as a flat plate such that a thickness of the rotary member **20** in the member axial direction Da is uniform, and thus the thicknesses of the four

targets **22** to **25** in the member axial direction Da are the same as each other. In the present embodiment, the two first targets **22** and **23** and the two second targets **24** and **25** may be referred to collectively as targets **22** to **25**.

[0042] The connecting portion **21** is located in the center portion of the rotary member **20** and has a circular shape centered at the rotary shaft center CL. A fitting hole **21***a* is formed inside the connecting portion **21**, which passes through the connecting portion **21** in the member axial direction Da, and the rotary shaft **70** is fitted into the fitting hole **21***a* so that the rotary shaft **70** is not rotatable relative to the connecting portion **21**. In other words, the rotary member **20** is connected to the rotary shaft **70** at this connecting portion **21**.

[0043] The two first targets **22** and **23** are each formed to protrude outward from the connecting portion **21** in the member radial direction Dr, and the two second targets **24** and **25** are also each formed to project outward from the connecting portion **21** in the member radial direction Dr.

[0044] A first one-side target **22**, which is one of the two first targets **22**, **23**, is disposed on the opposite side across the rotary shaft center CL to a first other-side target **23**, which is the other of the two first targets **22**, **23**. A second one-side target **24**, which is one of the two second targets **24**, **25**, is disposed on the opposite side across the rotary shaft center CL to a second other-side target **25**, which is the other of the two second targets **24**, **25**.

[0045] In detail, the four targets **22** to **25** are arranged in the following order: the first one-side target **22**, the second one-side target **24**, the first other-side target **23**, and the second other-side target **25**. They are spaced with equal pitch (specifically, 90 degree pitch) and disposed in a direction toward one side along the member circumferential direction Dc. For example, when viewed in a direction along the member axial direction Da, the four targets **22** to **25** are arranged as a whole to be point symmetrical about the rotary shaft center CL.

[0046] One side of the first one-side target **22** in the member axial direction Da has a facing surface **22***a* facing the other surface **30***b* of the substrate **30**, and one side of the first other-side target **23** in the member axial direction Da also has a facing surface **23***a* facing the other surface **30***b* of the substrate **30**. One side of the second one-side target **24** in the member axial direction Da has a facing surface **24***a* facing the other surface **30***b* of the substrate **30**, and one side of the second other-side target **25** in the member axial direction Da also has a facing surface **25***a* facing the other surface **30***b* of the substrate **30**. These facing surfaces **22***a*, **23***a*, **24***a*, **25***a* are parallel to the other surface **30***b* of the substrate **30**.

[0047] One side of the first one-side target **22** in the member circumferential direction Dc has a one end edge **221** and the other side of the first one-side target **22** in the member circumferential direction Dc has the other end edge **222**. The first one-side target **22** has a circular-sector shape in which a width of the first one-side target **22** in the member circumferential direction Dc increases in a direction outward along the member radial direction Dr. Thus, the one end edge **221** and the other end edge **222** of the first one-side target **22** each extend straight in the member radial direction Dr when viewed in a direction along the member axial direction Da. That is, the one end edge **221** and the other end edge **222** of the first one-side target **22** each extend orthogonally to a movement direction of the first one-side target **22** which is the member circumferential direction Dc.

[0048] The first other-side target **23**, second one-side target **24**, and second other-side target **25** also have the same circular-sector shape as the first one-side target **22**. In the present embodiment, all the four targets **22** to **25** are identical in shape.

[0049] Accordingly, one side of the first other-side target **23** in the member circumferential direction Dc has a one end edge **231**, and the other side of the first other-side target **23** in the member circumferential direction Dc has the other end edge **232**. The one end edge **231** and the other end edge **232** extend straight in the member radial direction Dr when viewed in a direction along the member axial direction Da. Further, one side of the second one-side target **24** in the member circumferential direction Dc has a one end edge **241**, and the other side of the second one-side target **24** in the member circumferential direction Dc has the other end edge **242**. The one end edge **241** and the other end edge **242** extend straight in the member radial direction Dr when viewed in a direction along the member axial direction Da. Further, one side of the second other-side target **25** in the member circumferential direction Dc has a one end edge **251**, and the other side of the second other-side target **25** in the member circumferential direction Dc has the other end edge **252**. The one end edge **251** and the other end edge **252** extend straight in the member radial direction Dr when viewed in a direction along the member axial direction Da.

[0050] In the present embodiment, since all four targets **22** to **25** are the same shape and rotate together as described above, the movement ranges W**1***a*, W**1***b*, W**2***a* and W**2***b* of the respective targets **22**, **23**, **24** and **25** are the same length in the member circumferential direction Dc.

[0051] The movement range W**1***a* of the first one-side target **22** is a maximum movable range of the first one-side target **22** in the member circumferential direction Dc within which the first one-side target **22** reciprocates. The movement range W**1***b* of the first other-side target **23** is a maximum movable range of the first other-side target **23** in the member circumferential direction Dc within which the first other-side target **23** reciprocates. The movement range W**2***a* of the second one-side target **24** is a maximum movable range of the second one-side target **24** in the member circumferential direction Dc within which the second one-side target **24** reciprocates. The movement range W**2***b* of the second other-side target **25** is a maximum movable range of the second other-side target **25** in the member circumferential direction Dc within which the second other-side target **25** reciprocates.

[0052] As shown in FIGS. **1** to **3** and **5**, the substrate **30** is a multilayer printed circuit board on which wiring patterns are formed and electrical components (not shown) are mounted. The substrate **30** has one surface **30***a* and the other surface **30***b* which are flat and perpendicular to the member axial direction Da. In other words, the normal direction of the substrate **30** coincides with the member axial direction Da. The one surface **30***a* of the substrate **30** is on one side of the substrate **30** in the member axial direction Da, and the other surface **30***b* of the substrate **30** is on the other side of the substrate **30** opposite the one side of the substrate **30** in the member axial direction Da.

[0053] The substrate **30** is a non-rotary member that does not rotate relative to a vehicle body or other components. Therefore, the rotary member **20** rotates relative to the substrate **30**.

[0054] The substrate **30** is disposed on one side of the four targets **22** to **25** in the member axial direction Da. The other surface **30***b* of the substrate **30** faces each of the facing surfaces **22***a* to **25***a* of the four targets **22** to **25** with an axial gap AG in the member axial direction Da. This axial gap AG is equal at any point between the substrate **30** and each of the four targets **22** to **25**.

[0055] The substrate **30** has a disk shape centered at the rotary shaft center CL. A through hole **30***c* is formed in the center of the substrate **30**, which passes through the substrate **30** in the member axial direction Da. The rotary shaft **70** is inserted through this through hole **30***c*.

[0056] As shown in FIGS. **5** and **6**, the substrate **30** has a first transmitter coil **31** and a second transmitter coil **32** formed as a part of the wiring pattern. The substrate **30** also has two first receiver coils **34**, **36**, two second receiver coils **35**, **37**, two third receiver coils **40**, **42**, and two fourth receiver coils **41**, **43** formed as a part of the wiring pattern. In other words, all transmitter coils **31** and **32** and all receiver coils **34** to **37** and **40** to **43** in the position detection device **1** are formed on the single substrate **30**.

[0057] Each of the coils **31**, **32**, **34** to **37**, and **40** to **43** possessed by the substrate **30** is connected via a not-shown connection wiring pattern to signal processors **47** and **48** (see FIG. **8**) which are composed of an IC or the like mounted on the substrate **30**. In FIGS. **5** and **6**, each of the coils **31**, **32**, **34** to **37**, and **40** to **43** is shown in a simplified manner for ease of viewing, and this is also applied in the drawings described below, which show each of the coils **31**, **32**, **34** to **37**, and **40** to **43**.

[0058] The first and second transmitter coils **31** and **32** are formed to overlap each other when viewed in a direction along the member axial direction Da, but are displaced from each other in the thickness direction of the substrate **30**, i.e., the member axial direction Da. For example, the first transmitter coil **31** is disposed apart from and on one side od the second transmitter coil **32** in the member axial direction Da.

[0059] Each of the first and second transmitter coils **31** and **32** is wound one or more times and formed into a circular ring shape. The first and second transmitter coils **31** and **32** surround all the receiver coils **34** to **37** and **40** to **43** included in the substrate **30** when viewed in a direction along the member axial direction Da. In other words, when viewed in a direction along the member axial direction Da, all of its receiver coils **34** to **37**, **40** to **43** are located inside the first transmitter coil **31** and inside the second transmitter coil **32**.

[0060] Therefore, when an alternating current flows in the first transmitter coil **31**, induced current flows to all receiver coils **34** to **37** and **40** to **43** due to electromagnetic induction caused by energizing the first transmitter coil **31**. When an alternating current flows in the second transmitter coil **32**, induced current flows to all receiver coils **34** to **37** and **40** to **43** due to electromagnetic induction caused by energizing that second transmitter coil **32**. In order to avoid the magnetic fields generated by the first and second transmitter coils **31** and **32** canceling each other, for example, alternating currents of the same phase and frequency flow through the first and second transmitter coils **31** and **32**.

[0061] A first one-side receiver coil **34**, which is one of the two first receiver coils **34** and **36**, and a second one-side receiver coil **35**, which is one of the two second receiver coils **35** and **37**, are coils for detecting a position of the first one-side target **22** in the member circumferential direction Dc. That is, an induced electromotive force corresponding to the position of the first one-side target **22** is generated in each of the first one-side receiver coil **34** and the second one-side receiver coil **35**.

[0062] A first other-side receiver coil **36**, which is the other of the two first receiver coils **34** and **36**, and a second other-side receiver coil **37**, which is the other of the two second receiver coils **35** and **37**, are coils for detecting a position of the first other-side target **23** in the member circumferential direction Dc. That is, an induced electromotive force corresponding to the position of the first other-side target **23** is generated in each of the first other-side receiver coil **36** and the second other-side receiver coil **37**.

[0063] The two first receiver coils **34**, **36** are electrically connected. In detail, the two first receiver coils **34**, **36** are connected in series with each other in a direction in which their outputs (in other words, their induced electromotive forces) are reinforced. Therefore, the two first receiver coils **34** and **36** output detection signals according to the positions of the first targets **22** and **23**. When two patterns of series connection are assumed, one in which the outputs of the two circuits are reinforced and the other in which the outputs of the two circuits are cancelled out, the "direction in which the outputs are reinforced" in relation to the above series connection means the direction in which the outputs are reinforced, which is one of the two patterns. The detection signals from the first receiver coils **34**, **36** correspond to, for example, a first voltage value V**1** shown in FIG. **9**, which will be described later. The detection signal from the first receiver coils **34**, **36** refers to a detection signal output from a conductor having the first receiver coils **34**, **36**, and does not mean that a detection signal is output individually from each of the two first receiver coils **34**, **36** to the receiver **472** (see FIG. **8**). The same applies to the following explanation.

[0064] The two second receiver coils **35**, **37** are also electrically connected. In detail, the two second receiver coils **35** and **37** are connected in series with each other in a direction in which their outputs are reinforced. Therefore, the two second receiver coils **35** and **37** output detection signals according to the positions of the first targets **22** and **23**. The detection signals from the second receiver coils **35**, **37** correspond to, for example, a second voltage value V**2** shown in FIG. **9**, which will be described later. The outputs of the two first receiver coils **34**, **36** corresponding to the positions of the first targets **22**, **23** are the same. Similarly, the outputs of the two second receiver coils **35** and **37** corresponding to the positions of the first targets **22** and **23** become the same.

[0065] A third one-side receiver coil **40**, which is one of the two third receiver coils **40** and **42**, and a fourth one-side receiver coil **41**, which is one of the two fourth receiver coils **41** and **43**, are coils for detecting a position of the second one-side target **24** in the member circumferential direction Dc. That is, an induced electromotive force corresponding to the position of the second one-side target **24** is generated in each of the third one-side receiver coil **40** and the fourth one-side receiver coil **41**.

[0066] A third other-side receiver coil **42**, which is the other of the two third receiver coils **40** and **42**, and a fourth

other-side receiver coil **43**, which is the other of the two fourth receiver coils **41** and **43**, are coils for detecting a position of the second other-side target **25** in the member circumferential direction Dc. That is, an induced electromotive force corresponding to the position of the second other-side target **25** is generated in each of the third other-side receiver coil **42** and the fourth other-side receiver coil **43**.

[0067] The two third receiver coils **40**, **42** are electrically connected. In detail, the two third receiver coils **40**, **42** are connected in series with each other in a direction in which their outputs (in other words, their induced electromotive forces) are reinforced. Therefore, the two third receiver coils **40** and **42** output detection signals according to the positions of the first targets **24** and **25**.

[0068] The two fourth receiver coils **41** and **43** are also electrically connected. In detail, the two fourth receiver coils **41** and **43** are connected in series with each other in a direction in which their outputs are reinforced. Therefore, the two fourth receiver coils **41** and **43** output detection signals according to the positions of the first targets **24** and **25**. The outputs of the two third receiver coils **40** and **42** corresponding to the positions of the second targets **24** and **25** are the same. Similarly, the outputs of the two fourth receiver coils **41** and **43** corresponding to the positions of the second targets **24** and **25** are also the same.

[0069] Each of the receiver coils **34** to **37** and **40** to **43** is composed of different wiring layers connected as appropriate through a via so that they do not interfere with each other (i.e., do not overlap). In FIG. **5** and the later drawings corresponding to FIG. **5**, the vias in the substrate **30** are omitted as appropriate.

[0070] The first one-side receiver coil **34** has a first spiral section **34***a* and a second spiral section **34***b*. The first and second spiral sections **34***a* and **34***b* thereof each have a spiral pattern shape when viewed in a direction along the member axis direction Da. In other words, the first and second spiral sections **34***a*, **34***b* are each formed to have a spiral-wound planar curve when viewed in a direction along the member axis direction Da. The first and second spiral sections **34***a* and **34***b* are connected in series via, for example, a not-shown connection wiring pattern. The external shapes of the first and second spiral sections **34***a* and **34***b* are not limited to the shape shown in FIG. **5**, but may be other shapes such as circular shapes.

[0071] The same is applied for the other receiver coils **35** to **37** and **40** to **43**. That is, the second one-side receiver coil **35** has a first spiral section **35***a* and a second spiral section **35***b* connected in series with each other. The first other-side receiver coil **36** has a first spiral section **36***a* and a second spiral section **36***b* connected in series with each other, and the second other-side receiver coil **37** has a first spiral section **37***a* and a second spiral section **37***b* connected in series with each other.

[0072] The third one-side receiver coil **40** has a first spiral section **40***a* and a second spiral section **40***b* connected in series with each other, and the fourth one-side receiver coil **41** has a first spiral section **41***a* and a second spiral section **41***b* connected in series with each other. The third other-side receiver coil **42** has a first spiral section **42***a* and a second spiral section **42***b* connected in series with each other, and the fourth other-side receiver coil **43** has a first spiral section **43***a* and a second spiral section **43***b* connected in series with each other. These spiral sections **35***a*, **35***b*, **36***a*, **36***b*, **37***a*, **37***b*, **40***a*, **40***b*, **41** *a*, **41***b*, **42***a*, **42***b*, **43***a*, **43***b* each have a spiral pattern shape when viewed in a direction along the member axis direction Da, similar to the spiral sections **34***a* and **34***b* of the first one-side receiver coil **34**.

[0073] The spiral sections **34***a* and **34***b* of the first one-side receiver coil **34** are arranged to overlap one side of the first one-side target **22** in the member axial direction Da at any position within the movement range W**1***a* of the first one-side target **22**. The spiral sections **35***a* and **35***b* of the second one-side receiver coil **35** are also arranged to overlap one side of the first one-side target **22** in the member axial direction Da at any position within the movement range W**1***a* of the first one-side target **22**.

[0074] The spiral sections **34***a*, **34***b*, **35***a*, **35***b* are arranged in the order: the first spiral section **34***a*, the first spiral section **35***a*, the second spiral section **34***b*, and the second spiral section **35***b*, from one side to the other side in the member circumferential direction Dc. The spiral sections **34***a*, **34***b*, **35***a*, **35***b* form one area when viewed in a direction along the member axis direction Da.

[0075] In other words, the first one-side receiver coil **34** and the second one-side receiver coil **35** form a first one-side receiving area **301** that the receiver coils **34** and **35** occupy in the substrate **30**. The first one-side receiver coil **34** and the second one-side receiver coil **35** constitute a first one-side receiver coil group **301***a* as a combination of the receiver coils **34** and **35**. The first one-side receiver coil group **301***a* corresponds to the one-side receiver coil group of the present disclosure.

[0076] As described above, the spiral sections **36***a* and **36***b* of the first other-side receiver coil **36** are arranged to overlap one side of the first other-side target **23** in the member axial direction Da at any position within the movement range W**1***b* of the first other-side target **23**. The spiral sections **37***a* and **37***b* of the second other-side receiver coil **37** are also arranged to overlap the one side of the first other-side target **23** in the member axial direction Da at any position within the movement range W**1***b* of the first other-side target **23**.

[0077] And these spiral sections **36***a*, **36***b*, **37***a*, **37***b* are arranged in the order: the first spiral section **36***a*, the first spiral section **37***a*, the second spiral section **36***b*, the second spiral section **37***b*, from one side to the other side in the member circumferential direction Dc. The spiral sections **36***a*, **36***b*, **37***a*, **37***b* form one area when viewed in a direction along the member axis direction Da.

[0078] In other words, the first other-side receiver coil **36** and the second other-side receiver coil **37** form a first other-side receiving area **302** that the receiver coils **36** and **37** occupy in the substrate **30**. The first other-side receiver coil **36** and the second other-side receiver coil **37** constitute a first other-side receiver coil group **302***a* as a combination of the receiver coils **36** and **37**. The first-other side receiver coil group **302***a* corresponds to the other receiver coil group of the present disclosure.

[0079] The spiral sections **40***a* and **40***b* of the third one-side receiver coil **40** are arranged to overlap one side of the second one-side target **24** in the member axial direction Da at any position within the movement range W**2***a* of the second one-side target **24**. The spiral sections **41***a* and **41***b* of the fourth one-side receiver coil **41** are also arranged to overlap the one side of the second one-side target **24** in the member axial direction Da at any position within the movement range W**2***a* of the second one-side target **24**.

[0080] The spiral sections **40***a*, **40***b*, **41** *a*, **41***b* are arranged in the order: the first spiral section **40***a*, the first spiral section **41***a*, the second spiral section **40***b* and the second spiral section **41***b*, from one side to the other side in the member circumferential direction Dc. The spiral sections **40***a*, **40***b*, **41** *a*, **41***b* form one are when viewed in a direction along the member axis direction Da.

[0081] That is, the third one-side receiver coil **40** and the fourth one-side receiver coil **41** form a second one-side receiving area **303** that the receiver coils **40** and **41** occupy in the substrate **30**. The third one-side receiver coil **40** and the fourth one-side receiver coil **41** constitute a second one-side receiver coil group **303***a* as a combination of the receiver coils **40** and **41**.

[0082] The spiral sections **42***a* and **42***b* of the third other-side receiver coil **42** are arranged to overlap one side of the second other-side target **25** in the member axial direction Da at any position within the movement range W**2***b* of the second other-side target **25**. The spiral sections **43***a* and **43***b* of the fourth other-side receiver coil **43** are also arranged to overlap the one side of the second other-side target **25** in the member axial direction Da at any position within the movement range W**2***b* of the second other-side target **25**.

[0083] The spiral sections **42***a*, **42***b*, **43***a*, **43***b* are arranged in the order: the first spiral section **42***a*, the first spiral section **43***a*, the second spiral section **42***b* and the second spiral section **43***b*, from one side to the other side in the member circumferential direction Dc. The spiral sections **42***a*, **42***b*, **43***a*, **43***b* form one area when viewed in a direction along the member axis direction Da.

[0084] The third other-side receiver coil **42** and the fourth other-side receiver coil **43** form a second other-side receiving area **304** that the receiver coils **42** and **43** occupy in the substrate **30**. The third other-side receiver coil **42** and the fourth other-side receiver coil **43** constitute a second other-side receiver coil group **304***a* as a combination of the receiver coils **42** and **43**.

[0085] FIG. **7** shows the receiving areas **301**, **302**, **303**, and **304** described above, which are substitutions of the receiver coils **34** to **37** and **40** to **43** shown in FIG. **5**. The above-mentioned first one-side receiving area **301** and first other-side receiving area **302** correspond to the first receiving area of the present disclosure, and the second one-side receiving area **303** and second other-side receiving area **304** correspond to the second receiving area of the present disclosure.

[0086] As shown in FIGS. **5** and **7**, the spiral sections **34***a* to **43***b* of the receiver coils **34** to **37** and **40** to **43**, as a whole, are spaced in the member circumferential direction Dc to form an annular shape centered at the rotary shaft center CL. In other words, the four receiving areas **301** to **304** are also aligned in the member circumferential direction Dc so that as a whole they form an annular shape centered at the rotary shaft center CL. The above spiral sections **34***a* to **43***b* mean spiral sections **34***a*, **34***b*, **35***a*, **35***b*, **36***a*, **36***b*, **37***a*, **37***b*, **40***a*, **40***b*, **41***a*, **41***b*, **42***a*, **42***b*, **43***a*, **43***b*.

[0087] The four receiving areas **301** to **304** are arranged in the order: the first one-side receiving area **301**, the second other-side receiving area **304**, the first other-side receiving area **302**, and the second one-side receiving area **303**, from one side to the other side in the member circumferential direction Dc. Specifically, the four receiving areas **301** to **304** are arranged at a pitch of 90 degrees in the member circumferential direction Dc, centered at the rotary shaft center CL.

[0088] Therefore, the first one-side receiving area **301** is located opposite to the first other-side receiving area **302** across the rotary shaft center CL, and the second one-side receiving area **303** is located opposite to the second other-side receiving area **304** across the rotary shaft center CL. That is, the first one-side receiver coil group **301***a* is located opposite to the first other-side receiver coil group **302***a* across the rotary shaft center CL, and the second one-side receiver coil group **303***a* is located opposite to the second other-side receiver coil group **304***a* across the rotary shaft center CL.

[0089] As a confirmation, a one-side end position P**1** of the first one-side receiving area **301** in the member circumferential direction Dc (i.e., circumferential one-side end position P**1**) coincides with a one-side end position of the first one-side receiver coil **34** (i.e., an end position of the first spiral section **34***a* on one side in the circumferential direction). An other-side end position P**2** of the first one-side receiving area **301** in the member circumferential direction Dc (i.e., circumferential other-side end position P**2**) coincides with an other-side end position of the second one-side receiver coil **35** (i.e., an end position of the second spiral section **35***b* on the other side in the circumferential direction). This relationship is also applied for the first other-side receiving area **302**, the second one-side receiving area **303**, and the second other-side receiving area **304**.

[0090] As shown in FIGS. **1** and **7**, the first one-side target **22** reciprocates in the member circumferential direction Dc within the movement range W**1***a* of the first one-side target **22**, as described above. However, the movement range W**1***a* of the first one-side target **22** is configured so that the first one-side target **22** does not overlap the other sides of the second one-side receiving area **303** and the second other-side receiving area **304** in the member axial direction Da. In other words, the first one-side target **22** reciprocates in the member circumferential direction Dc within a range out of the second one-side receiving area **303** and the second other-side receiving area **304**.

[0091] The same is applied for the other movement ranges W**1***b*, W**2***a*, and W**2***b*. The movement range W**1***b* of the first other-side target **23** is configured so that the first other-side target **23** does not overlap the other sides of the second one-side receiving area **303** and the second other-side receiving area **304** in the member axial direction Da. The movement range W**2***a* of the second one-side target **24** is configured so that the second one-side target **24** does not overlap the other sides of the first one-side receiving area **301** and the first other-side receiving area **302** in the member axial direction Da. The movement range W**2***b* of the second other-side target **25** is configured so that the second other-side target **25** does not overlap the other sides of the first one-side receiving area **301** and the first other-side receiving area **302** in the member axial direction Da.

[0092] More specifically, the first one-side target **22** reciprocates in the circumferential direction Dc without departing from an area located on the other side of the circumferential one-side end position P**1** of the first one-side receiving area **301** and on the one side of the circumferential other-side end position P**2** of the first one-side receiving area **301** in the member circumferential direction Dc. This is also applied

for the location relationships between the other targets **23**, **24**, **25** and the receiving areas **302**, **303**, **304**.

[0093] The movement range W**1***a* of the first one-side target **22** is a range distributed in the member circumferential direction Dc with respect to the center position **301***b* of the first one-side receiving area **301** in the member circumferential direction Dc. Specifically, the movement range W**1***a* is symmetrical in the member circumferential direction Dc with respect to the center position **301***b* of the first one-side receiving area **301** in the member circumferential direction Dc. The "symmetry" of the movement range W**1***a* is not strictly true. The same applies to the "symmetry" of the other movement ranges W**1***b*, W**2***a*, and W**2***b* described later.

[0094] Similarly, the movement range W**1***b* of the first other-side target **23** is a range distributed in the member circumferential direction Dc with respect to the center position **302***b* of the first other-side receiving area **302** in the member circumferential direction Dc. Specifically, the movement range W**1***b* is symmetrical in the member circumferential direction Dc with respect to the center position **302***b* of the first other-side receiving area **302** in the member circumferential direction Dc.

[0095] The movement range W**2***a* of the second one-side target **24** is a range distributed in the member circumferential direction Dc with respect to the center position **303***b* of the second one-side receiving area **303** in the member circumferential direction Dc. Specifically, the movement range W**2***a* is symmetrical in the member circumferential direction Dc with respect to the center position **303***b* of the second one-side receiving area **303** in the member circumferential direction Dc.

[0096] Further, the movement range W**2***b* of the second other-side target **25** is a range distributed in the member circumferential direction Dc with respect to the center position **304***b* of the second other-side receiving area **304** in the member circumferential direction Dc. Specifically, the movement range W**2***b* is symmetrical in the member circumferential direction Dc with respect to the center position **304***b* of the second other-side receiving area **304** in the member circumferential direction Dc.

[0097] As shown in FIG. **8**, various electrical components are mounted on the substrate **30** in addition to the coils **31**, **32**, **34** to **37**, and **40** to **43** described above. Specifically, a plurality of capacitors **451**, **452**, **461**, **462**, ICs constituting the first signal processor **47**, ICs constituting the second signal processor **48**, a first terminal **49**, and a second terminal **50** are also mounted on the substrate **30**.

[0098] The first transmitter coil **31**, the two first receiver coils **34**, **36**, the two second receiver coils **35**, **37**, the two capacitors **451**, **452**, the first signal processor **47**, and the first terminal **49** constitute a first system **305**. The second transmitter coil **32**, the two third receiver coils **40**, **42**, the two fourth receiver coils **41**, **43**, the two capacitors **461**, **462**, second signal processor **48**, and the second terminal **50** constitute a second system **306**. Since the first system **305** and the second system **306** are independent as electrical circuits, the position detection device **1** can detect the rotational position of the rotary member **20** by one of the systems **305** and **306** even if another of the systems malfunctions.

[0099] The first and second signal processors **47** and **48** each function as an in-vehicle microcomputer with a CPU, RAM, ROM, nonvolatile rewritable memory, etc., not shown. That is, the first and second signal processors **47** and **48** individually read and execute computer programs stored in ROM or nonvolatile rewritable memory, which are non-transitory substantive storage media. By executing this computer program, a method corresponding to the computer program is performed. The same is applied for an electronic controller **72**, which is discussed below. CPU is an abbreviation for Central Processing Unit, ROM is an abbreviation for Read Only Memory, RAM is an abbreviation for Random Access Memory.

[0100] The first transmitter coil **31**, the two first receiver coils **34**, **36**, and the two second receiver coils **35**, **37** are individually connected to the first signal processor **47**. For example, the two capacitors **451** and **452** are connected in series between both ends of the first transmitter coil **31** and the first signal processor **47**, and a portion connecting each capacitor **451** and **452** to each other is connected to ground. The first signal processor **47** is then connected to the electronic controller **72** located outside the position detection device **1** via the first terminal **49** fixed to the substrate **30**.

[0101] The same is applied for the connection relationship around the second signal processor **48**. That is, the second transmitter coil **32**, the two third receiver coils **40**, **42**, and the two fourth receiver coils **41**, **43** are individually connected to the second signal processor **48**. For example, two capacitors **461** and **462** are connected in series between both ends of the second transmitter coil **32** and the second signal processor **48**, and a portion connecting each capacitor **461** and **462** to each other is connected to ground. The second signal processor **48** is then connected to the electronic controller **72** located outside via the second terminal **50** fixed to the substrate **30**. Thus, the first signal processor **47** and the second signal processor **48** output the rotational position (in other words, the rotation angle) of the rotary member **20** separately to the electronic controller **72**.

[0102] Next, the operation of the first signal processor **47** described above will be described.

[0103] As shown in FIG. **8**, the first signal processor **47** includes an oscillator **471** and a receiver **472**. The oscillator **471** is connected to both ends of the first transmitter coil **31** and applies an alternating current of a predetermined frequency to the first transmitter coil **31**. This causes the first transmitter coil **31** to generate a magnetic field in the member axial direction Da that passes through the receiver coils **34** to **37** and **40** to **43**. This magnetic field causes an induced current to flow in the receiver coils **34** to **37** and **40** to **43**, respectively.

[0104] The receiver **472** is connected to two first receiver coils **34** and **36** connected in series, and two second receiver coils **35** and **37** connected in series. The receiver **472** acquires a conversion signal (i.e., the first voltage value V**1** in FIG. **9**) by performing demodulation and AD conversion on the outputs from the two first receiver coils **34** and **36**. The output from the two first receiver coils **34**, **36** is the sum of the output from one of the two first receiver coils **34**, **36** and the output from the other one. The receiver **472** also acquires a conversion signal (i.e., the second voltage value V**2** in FIG. **9**) obtained by performing demodulation and AD conversion on the outputs from the two second receiver coils **35** and **37**. The output from the two second receiver coils **35**, **37** is the sum of the output from one of the two second receiver coils **35**, **37** and the output from the other one.

[0105] Based on each of the acquired conversion signals, the receiver **472** calculates the rotation angle (i.e., rotational position) of the rotary member **20** by computing, for example, an inverse tangent function using those conversion signals. The relationship between the electrical angle θ in the electrical signals of the first and second receiver coils **34**, **36**, **35**, and **37** and the rotation angle (i.e., the mechanical angle) of the rotary member **20** is determined in advance depending on, for example, the sizes of the first targets **22**, **23** and the receiver coils **34**, **36**, **35**, and **37**. Therefore, the rotation angle of the rotary member **20** can be calculated based on the electrical angle θ. For example, in the present embodiment, the relationship between the above electrical angle θ and the mechanical angle is the same for all of the receiver coil groups **301***a*, **302***a*, **303***a*, **304***a*.

[0106] When the receiver **472** thus calculates or determines the rotation position of the rotary member **20** based on the detection signals from the first and second receiver coils **34**, **36**, **35**, **37**, the receiver **472** outputs a signal indicating the rotational position of the rotary member **20** to the external electronic controller **72** via the first terminal **49**.

[0107] The above is the basic operation of the first signal processor **47**. Like the first signal processor **47**, the second signal processor **48** also has an oscillator **481** and a receiver **482**. The oscillator **481** of the second signal processor **48** is the same as the oscillator **471** of the first signal processor **47**, and the receiver **482** of the second signal processor **48** is the same as the receiver **472** of the first signal processor **47**. The operation of the second signal processor **48** is the same as that of the first signal processor **47**, so a description of the operation of the second signal processor **48** is omitted.

[0108] Next, the first voltage value V**1** of the first receiver coils **34**, **36** and the second voltage value V**2** of the second receiver coils **35**, **37** when the rotary member **20** rotates will be described.

[0109] For example, when an alternating current of a predetermined frequency is applied to the first transmitter coil **31**, a magnetic field is generated in the member axis direction Da that passes through the first one-side receiver coil **34** and the second one-side receiver coil **35** of the first one-side receiver coil group **301***a*. Since the magnetic field is changed by the alternating current, electromagnetic induction generates an induced electromotive force for each of the first one-side receiver coil **34** and the second one-side receiver coil **35**.

[0110] When the first one-side target **22** faces the first transmitter coil **31**, the first one-side receiver coil **34**, and the second one-side receiver coil **35**, eddy currents are generated in the first one-side target **22** and a magnetic field caused by the eddy currents is generated. Therefore, the magnetic field passing through the first one-side receiver coil **34** and the second one-side receiver coil **35** in the member axial direction Da has a portion that passes through an area facing the first one-side target **22** and is cancelled out by the magnetic field caused by the eddy currents.

[0111] In accordance with rotation of the rotary member **20**, the position and size of the area facing the first one-side target **22** changes in each of the first one-side receiver coil **34** and the second one-side receiver coil **35**. The above has been described using the first one-side receiver coil group **301***a* as an example, but the same applies to the first other-side receiver coil group **302***a*.

[0112] Therefore, as the rotary member **20** rotates, the first voltage value V**1** generated in the first receiver coils **34**, **36** and the second voltage value V**2** generated in the second receiver coils **35**, **37** change periodically. In the present embodiment, for example, as shown in FIG. **9**, the first voltage value V**1** generated in the first receiver coils **34**, **36** is a sine wave, and the second voltage value V**2** generated in the second receiver coils **35**, **37** is a cosine wave with the same wavelength as the first voltage value V**1**.

[0113] The voltage values generated in the third receiver coils **40**, **42** and the voltage values generated in the fourth receiver coils **41**, **43** are similar to those described above, and therefore will not be described here.

[0114] As described above, according to the present embodiment, the first one-side target **22** reciprocates in the member circumferential direction Dc. The first one-side target **22** reciprocates within the movement range W**1***a* in which the first one-side target **22** does not overlap with the second one-side receiving area **303** and the second other-side receiving area **304** on the other side in the member axis direction Da.

[0115] Therefore, it is possible to prevent the first one-side target **22** from interfering with the magnetic flux passing through the third and fourth receiver coils **40**, **42**, **41**, **43** for detecting the positions of the second targets **24**, **25**. Therefore, it is possible to reduce the influence of the first one-side target **22** on each output value (i.e., each detection signal) of the third and fourth receiver coils **40**, **42**, **41**, **43**.

[0116] In addition, the first one-side target **22** and the first other-side target **23** operate without affecting the signal processing of the second system **306**, and the second one-side target **24** and the second other-side target **25** operate without affecting the signal processing of the first system **305**. Therefore, the independence of the first system **305** and the second system **306** from each other can be guaranteed.

[0117] (1) Furthermore, according to the present embodiment, the movement range W**1***a* of the first one-side target **22** is a range distributed in the member circumferential direction Dc with respect to the center position **301***b* of the first one-side receiving area **301** in the member circumferential direction Dc. Therefore, it is possible to make maximum use of the length of the first one-side receiving area **301** in the member circumferential direction Dc, thereby widening the movement range W**1***a* of the first one-side target **22**.

[0118] (2) Furthermore, according to the present embodiment, the first one-side target **22** reciprocates in the circumferential direction Dc without departing from an area located on the other side of the circumferential one-side end position P**1** of the first one-side receiving area **301** and on the one side of the circumferential other-side end position P**2** of the first one-side receiving area **301** in the member circumferential direction Dc. This makes it possible to further reduce the influence of the first one-side target **22** on the output values of the third and fourth receiver coils **40**, **42**, **41**, and **43**.

[0119] (3) Furthermore, according to the present embodiment, when viewed in a direction along the member axis direction Da, all the receiver coils **34** to **37** and **40** to **43** on the substrate **30** are arranged inside the first transmitter coil **31** and inside the second transmitter coil **32**.

[0120] Therefore, even if, for example, one of the first transmitter coil **31** and the second transmitter coil **32** becomes unable to conduct electricity due to a broken wire or the like, it is possible for the other transmitter coil to cause an induced current to flow through all of the receiver coils

34 to **37** and **40** to **43**. In addition, compared to a configuration in which the receiver coils **34**, **36**, **35**, and **37** belonging to the first system **305** and the receiver coils **40**, **42**, **41**, and **43** belonging to the second system **306** are surrounded separately by the first transmitter coil **31** and the second transmitter coil **32**, the area required by the first and second transmitter coils **31** and **32** can be made smaller.

[0121] (4) Furthermore, according to the present embodiment, the spiral sections **34***a* to **43***b* of the receiver coils **34** to **37** and **40** to **43** each have a spiral pattern shape when viewed when viewed in a direction along the member axis direction Da. Therefore, for example, compared to a case where each of the receiver coils **34** to **37**, **40** to **43** is formed in a pattern shape that describes a sine wave or cosine wave, the number of wiring layers formed on the substrate **30** is reduced, making it possible to manufacture more easily.

[0122] (5) Furthermore, according to the present embodiment, as shown in FIGS. **1** and **5**, the first one-side target **22** is disposed on the opposite side of the first other-side target **23** across the rotary shaft center CL. The first one-side receiver coil group **301***a* is disposed on the opposite side of the first other-side receiver coil group **302***a* across the rotary shaft center CL.

[0123] This makes it possible to easily obtain a configuration that can reduce the effect of misalignment of the rotary member **20** on the output of the position detection device **1** indicating the rotational position of the rotary member **20**, in other words, a configuration that is resistant to misalignment of the rotary member **20**.

[0124] For example, assume that the rotary member **20** in FIG. **1** is misaligned toward the upper side of the paper. In this case, in the first system **305**, in the first one-side receiving area **301**, the projected area of the first one-side target **22** overlapping the first and second one-side receiver coils **34**, **35** is reduced due to misalignment of the rotary member **20**. In contrast, in the first other-side receiving area **302**, the projected area of the first other-side target **23** overlapping the first and second other-side receiver coils **36**, **37** increases due to misalignment of the rotary member **20**. When the projected area of the target changes, the output of the receiver coil also changes accordingly.

[0125] Furthermore, assuming that the direction from one side to the other side of the member circumferential direction Dc is a positive direction, and looking at the second system **306**, the second one-side target **24** advances due to misalignment of the rotary member **20**, and conversely, the second other-side target **25** retards due to misalignment of the rotary member **20**.

[0126] In this way, between the first one-side receiver coil group **301***a* and the first other-side receiver coil group **302***a* which belong to the first system **305** and are arranged point-symmetrically with respect to the rotary shaft center CL, opposite phenomena occur due to misalignment of the rotary member **20**. Similarly, opposite phenomena occur between the second one-side receiver coil group **303***a* and the second other-side receiver coil group **304***a*, which are arranged point-symmetrically with respect to the rotary shaft center CL and belong to the second system **306**, due to misalignment of the rotary member **20**.

[0127] Therefore, by utilizing the fact that the opposite phenomenon occurs in the first system **305**, a configuration that is resistant to misalignment of the rotary member **20** can be easily obtained in the first system **305**. By utilizing the fact that the opposite phenomenon occurs in the second system **306**, a configuration that is resistant to misalignment of the rotary member **20** can be easily obtained in the second system **306** as well.

[0128] For example, in the present embodiment, the two first receiver coils **34**, **36** in the first system **305** are connected in series as described above, so that the effect of misalignment of the rotary member **20** on the coil output is offset between the two first receiver coils **34**, **36**. Similarly, the effect of misalignment of the rotary member **20** on the coil output is offset between the two second receiver coils **35**, **37** connected in series. The same applies to the second system **306**. Therefore, as described above, in the first system **305**, a configuration that is resistant to misalignment of the rotary member **20** can be easily obtained, and also in the second system **306**, a configuration that is resistant to misalignment of the rotary member **20** can be easily obtained.

[0129] It is considered that the angular position sensor disclosed in the above-mentioned Patent Document 1 is more vulnerable to misalignment of the rotary member than the position detection device **1** of the present embodiment. This is because the angular position sensor of Patent Document 1 does not employ a structure that offsets the effect of misalignment of the rotary member on the coil output between the two receiver coils arranged on either side of the rotary shaft center.

[0130] In addition, according to the present embodiment, as shown in FIGS. **2** and **5**, all of the transmitter and receiver coils **31**, **32**, **34** to **37**, **40** to **43** are formed on a single substrate **30**, and all of the targets **22** to **25** are arranged on one side of the substrate **30** in the member axis direction Da. Therefore, the size of the position detection device **1** can be made smaller than, for example, a configuration in which the first targets **22**, **23** are arranged on one side of the substrate **30** in the member axis direction Da, and the second targets **24**, **25** are arranged on the other side of the substrate **30** in the member axis direction Da.

Second Embodiment

[0131] Next, a second embodiment will be described. The present embodiment is explained mainly with respect to points different from those of the first embodiment. In addition, explanations of the same or equivalent portions as those in the above embodiment is omitted or simplified. The same applies to a description of the embodiments described later.

[0132] As shown in FIG. **10**, pattern shapes of the receiver coils **34** to **37** and **40** to **43** in the present embodiment are different from those in the first embodiment. Therefore, the spiral sections **34***a* to **43***b* (see FIG. **5**) of the first embodiment are not provided in the present embodiment.

[0133] In the present embodiment, as in the first embodiment, all receiver coils **34** to **37** and **40** to **43** are located inside the first transmitter coil **31** and inside the second transmitter coil **32** when viewed in a direction along the member axial direction Da. Each of the receiver coils **34** to **37** and **40** to **43** is composed of different wiring layers connected as appropriate through a via **30***d* so that they do not interfere with each other (i.e., do not overlap).

[0134] In the present embodiment, each of the receiver coils **34** to **37**, **40** to **43** is composed of two adjacent wiring layers stacked in sequence and connected by the via **30***d*. For example, in the present embodiment, each of the receiver coils **34** to **37**, **40** to **43** is formed by connecting the wiring

layer on the topmost surface layer located on the other surface **30***b* of the substrate **30** to the next layer on the topmost surface layer. With respect to each of the receiver coils **34** to **37** and **40** to **43** in FIG. **10**, the wiring layer formed on the topmost surface layer in substrate **30** is indicated by a solid line, and the wiring layer formed on the layer next to the topmost surface layer is indicated by a dashed line. The transmitter coils **31** and **32** are all shown as solid lines.

[0135] Specifically, the first one-side receiver coil **34** has a first wavy section **34***d* and a second wavy section **34***e*. The first and second wavy sections **34***d* and **34***e* each form a sinusoidal pattern shape when viewed in a direction along the member axial direction Da. The first and second wavy sections **34***d* and **34***e* are connected in series via a connecting wiring pattern, for example, to form a closed loop.

[0136] The second one-side receiver coil **35** has a first wavy section **35***d* and a second wavy section **35***e*. The first and second wavy sections **35***d*, **35***e* each have a pattern shape that draws a sinusoidal curve phase-shifted in the member circumferential direction Dc relative to the first and second wavy portions **34***d* and **34***e* of the first one-side receiver coil **34** in the member circumferential direction Dc when viewed in a direction along the member axial direction Da. The first and second wavy sections **35***d* and **35***e* are connected in series via a connecting wiring pattern, for example, to form a closed loop. For example, the wavy sections **34***d*, **34***e*, **35***d*, **35***e* of the first and second one-side receiver coils **34** and **35** are arranged to overlap the one side of the first one-side target **22** in the member axial direction Da at any position within the movement range W**1***a* of the first one-side target **22**.

[0137] The same is applied for other receiver coil groups **302***a*, **303***a*, **304***a* other than the first one-side receiver coil group **301***a* which includes the receiver coils **34** and **35** described above. That is, the first other-side receiver coil **36** has a first wavy section **36***d* and a second wavy section **36***e* that form a sinusoidal pattern shape when viewed in a direction along the member axial direction Da and are connected in series with each other. In addition, the second other-side receiver coil **37** has a first wavy section **37***d* and a second wavy section **37***e* connected in series to each other and forming a pattern shape that draws a sinusoidal curve phase-shifted in the member circumferential direction Dc relative to the first and second wavy sections **36***d*, **36***e* when viewed in a direction along the member axial direction Da. For example, the wavy sections **36***d*, **36***e*, **37***d*, **37***e* of the first and second other-side receiver coils **36** and **37** are arranged to overlap the one side of the first other-side target **23** in the member axial direction Da at a position within the movement range W**1***b* of the first other-side target **23**.

[0138] The third one-side receiver coil **40** has a first wavy section **40***d* and a second wavy section **40***e* that form a sinusoidal pattern shape when viewed in a direction along the member axial direction Da and are connected in series with each other. In addition, the fourth other-side receiver coil **41** has a first wavy section **41***d* and a second wavy section **41***e* connected in series to each other and forming a pattern shape that draws a sinusoidal curve phase-shifted in the member circumferential direction Dc relative to the first and second wavy sections **40***d*, **40***e* when viewed in a direction along the member axial direction Da. For example, the wavy sections **40***d*, **40***e*, **41***d*, **41***e* of the third and fourth one-side receiver coils **40** and **41** are arranged to overlap the one side of the second one-side target **24** in the member axial direction Da at any position within the movement range W**2***a* of the second one-side target **24**.

[0139] The third other-side receiver coil **42** has a first wavy section **42***d* and a second wavy section **42***e* that form a sinusoidal pattern shape when viewed in a direction along the member axial direction Da and are connected in series with each other. In addition, the fourth other-side receiver coil **43** has a first wavy section **42***d* and a second wavy section **42***e* connected in series to each other and forming a pattern shape that draws a sinusoidal curve phase-shifted in the member circumferential direction Dc relative to the first and second wavy sections **43***d*, **43***e* when viewed in a direction along the member axial direction Da. For example, the wavy sections **42***d*, **42***e*, **43***d*, **43***e* of the third and fourth other-side receiver coils **42** and **43** are arranged to overlap the one side of the second other-side target **25** in the member axial direction Da at a position within the movement range W**2***b* of the second other-side target **25**.

[0140] In the present embodiment, a circumferential one-side end position P**1** of the first one-side receiving area **301** coincides with the one-side end position of the second one-side receiver coil **35** in the member circumferential direction Dc. A circumferential other-side end position P**2** of the first one-side receiving area **301** coincides with the other end position of the second one-side receiver coil **35** in the member circumferential direction Dc. This relationship is also applied for the first other-side receiving area **302**, the second one-side receiving area **303**, and the second other-side receiving area **304**.

[0141] (1) As described above, according to the present embodiment, each of the wavy sections **34***d* to **43***e* of the receiver coils **34** to **37** and **40** to **43** has a pattern shape that forms a sinusoidal curve when viewed in the direction along the member axis direction Da. Therefore, it is possible to cause the receiver coils **34** to **37** and **40** to **43** to output electrical signals of sine waves or cosine waves having a phase difference. In addition, the above-mentioned wavy sections **34***d* to **43***e* mean wavy sections **34***d*, **34***e*, **35***d*, **35***e*, **36***d*, **36***e*, **37***d*, **37***e*, **40***d*, **40***e*, **41***d*, **41***e*, **42***d*, **42***e*, **43***d*, and **43***e*.

[0142] The present embodiment is similar to the first embodiment, except for the above described aspects. Thus, the present embodiment can achieve the advantages obtained by the configuration common to the first embodiment described above in a similar manner as in the first embodiment.

Third Embodiment

[0143] Next, a third embodiment will be described. The present embodiment is explained mainly with respect to points different from those of the first embodiment.

[0144] As shown in FIG. **11**, a substrate **30** in this embodiment has two first transmitter coils **311** and **312** instead of the first transmitter coil **31** (see FIG. **5**) of the first embodiment, and two second transmitter coils **321** and **322** instead of the second transmitter coil **32** (see FIG. **5**) of the first embodiment.

[0145] The two first transmitter coils **311** and **312** are a first one-side transmitter coil **311** and a first other-side transmitter coil **312**. The two second transmitter coils **321** and **322** are a second one-side transmitter coil **321** and a second other-side transmitter coil **322**.

[0146] The first one-side transmitter coil **311** and the first other-side transmitter coil **312** are connected in series. Therefore, for example, when a current flows through the first one-side transmitter coil **311**, a current also flows through the first other-side transmitter coil **312** at the same time. At this time, the direction of the current flowing through the first one-side transmitter coil **311** around the first one-side receiver coil group **301***a* is the same as the direction of the current flowing through the first other-side transmitter coil **312** around the first other-side receiver coil group **302***a*. In short, when a current flows clockwise in the first one-side transmitter coil **311**, a current also flows clockwise in the first other-side transmitter coil **312**, and when a current flows counterclockwise in the first one-side transmitter coil **311**, a current also flows counterclockwise in the first other-side transmitter coil **312**.

[0147] The second one-side transmitter coil **321** and the second other-side transmitter coil **322** are also connected in series. Therefore, for example, when a current flows through the second one-side transmitter coil **321**, a current also flows through the second other-side transmitter coil **322** at the same time. At this time, the direction of the current flowing through the second one-side transmitter coil **321** around the second one-side receiver coil group **303***a* is the same as the direction of the current flowing through the second other-side transmitter coil **322** around the second other-side receiver coil group **304***a*. In short, when a current flows clockwise in the second one-side transmitter coil **321**, a current also flows clockwise in the second other-side transmitter coil **322**, and when a current flows counterclockwise in the second one-side transmitter coil **321**, a current also flows counterclockwise in the second other-side transmitter coil **322**.

[0148] When viewed in a direction along the member axial direction Da, the first and second one-side receiver coils **34** and **35** are located inside the first one-side transmitter coil **311** while the other receiver coils **36**, **37**, **40** to **43** are located outside the first one-side transmitter coil **311**. Therefore, when an alternating current flows in the first one-side transmitter coil **311**, the induced current flows to the first and second one-side receiver coils **34** and **35** due to electromagnetic induction caused by energizing the first one-side transmitter coil **311**.

[0149] When viewed in a direction along the member axial direction Da, the first and second other-side receiver coils **36** and **37** are located inside the first other-side transmitter coil **312** while the other receiver coils **34**, **35**, **40** to **43** are located outside the first other-side transmitter coil **312**. Therefore, when an alternating current flows in the first other-side transmitter coil **312**, the induced current flows to the first and second other-side receiver coils **36** and **37** due to electromagnetic induction caused by energizing the first other-side transmitter coil **312**.

[0150] When viewed in a direction along the member axial direction Da, the third and fourth one-side receiver coils **40** and **41** are located inside the second one-side transmitter coil **321** while the other receiver coils **34** to **37**, **42** and **43** are located outside the second one-side transmitter coil **321**. Therefore, when an alternating current flows in the second one-side transmitter coil **321**, the induced current flows to the third and fourth one-side receiver coils **40** and **41** due to electromagnetic induction caused by energizing the second one-side transmitter coil **321**.

[0151] When viewed in a direction along the member axial direction Da, the third and fourth other-side receiver coils **42** and **43** are located inside the second other-side transmitter coil **322** while the other receiver coils **34** to **37**, **40** and **41** are located outside the second other-side transmitter coil **322**. Therefore, when an alternating current flows in the second other-side transmitter coil **322**, the induced current flows to the third and fourth other-side receiver coils **42** and **43** due to electromagnetic induction caused by energizing the second other-side transmitter coil **322**.

[0152] The transmitter coils **311**, **312**, **321**, **322** are arranged at intervals from one side to the other side in the member circumferential direction Dc in the order: the first one-side transmitter coil **311**, the second other-side transmitter coil **322**, the first other-side transmitter coil **312** and the second one-side transmitter coil **321**. Each of these transmitter coils **311**, **312**, **321**, and **322** has a sector shape, and the transmitter coils **311**, **312**, **321**, and **322** are arranged as a whole to form a circular ring shape centered on the rotary shaft center CL.

[0153] Except the above descriptions, the first one-side transmitter coil **311** and the first other-side transmitter coil **312** are the same as the first transmitter coil **31** of the first embodiment, and the second one-side transmitter coil **321** and the second other-side transmitter coil **322** are the same as the second transmitter coil **32** of the first embodiment.

[0154] (1) The configurations of the transmitter coils **311**, **312**, **321** and **322** described above makes it possible to generate electromagnetic induction to the receiver coils separately for each of the receiver coil groups **301***a*, **302***a*, **303***a* and **304***a*.

[0155] In the present embodiment, each of the transmitter coils **311**, **312**, **321**, **322** may be formed in the same wiring layer in the substrate **30**.

[0156] The present embodiment is similar to the first embodiment, except for the above described aspects. Thus, the present embodiment can achieve the advantages obtained by the configuration common to the first embodiment described above in a similar manner as in the first embodiment.

Fourth Embodiment

[0157] A fourth embodiment is described next. The present embodiment will be explained mainly with respect to portions different from those of the third embodiment.

[0158] As shown in FIG. **12**, each of the receiver coils **34** to **37** and **40** to **43** of the present embodiment has the pattern shape of the second embodiment instead of the pattern shape of the third embodiment.

[0159] That is, in the present embodiment, the spiral sections **34***a* to **43***b* (see FIG. **11**) are not provided. Instead, the first one-side receiver coil **34** has a first wavy section **34***d* and a second wavy section **34***e* similar to the second embodiment, and the second one-side receiver coil **35** has a first wavy section **35***d* and a second wavy section **35***e* similar to the second embodiment. In addition, the first other-side receiver coil **36** has a first wavy section **36***d* and a second wavy section **36***e* similar to the second embodiment, and the second other-side receiver coil **37** has a first wavy section **37***d* and a second wavy section **37***e* similar to the second embodiment.

[0160] In addition, the third one-side receiver coil **40** has a first wavy section **40***d* and a second wavy section **40***e* similar to the second embodiment, and the fourth one-side

receiver coil **41** has a first wavy section **41***d* and a second wavy section **41***e* similar to the second embodiment. In addition, the third other-side receiver coil **42** has a first wavy section **42***d* and a second wavy section **42***e* similar to the second embodiment, and the fourth other-side receiver coil **43** has a first wavy section **43***d* and a second wavy section **43***e* similar to the second embodiment.

[0161] Aside from the above described aspects, the present embodiment is the same as the third embodiment. Thus, the present embodiment can achieve the advantages obtained by the configuration common to the third embodiment described above in a similar manner as in the third embodiment.

Fifth Embodiment

[0162] A fifth embodiment is described next. The present embodiment is explained mainly with respect to points different from those of the first embodiment.

[0163] As shown in FIG. **13**, the first signal processor **47** includes a first failure detection unit **473**, and the second signal processor **48** includes a second failure detection unit **483**. The present embodiment is different from the first embodiment in this point.

[0164] Specifically, the first failure detection unit **473** executes the control process shown in FIG. **14**. The flowchart in FIG. **14** is repeatedly executed periodically.

[0165] As shown in FIG. **14**, firstly, in step S**01**, the first failure detection unit **473** acquires, from the receiver **472**, the detection signals output from the two first receiver coils **34**, **36** connected in series. At the same time, the first failure detection unit **473** also acquires, from the receiver **472**, the detection signals output from the two second receiver coils **35** and **37** connected in series. As shown in FIG. **9**, the magnitude of the detection signal output from the first receiver coils **34**, **36** is specifically a first voltage value V**1**, and the magnitude of the detection signal output from the second receiver coils **35**, **37** is specifically a second voltage value V**2**.

[0166] As described above, the first voltage value V**1** changes sinusoidally with respect to the electrical angle θ corresponding to the rotational position of the rotary member **20**, and the second voltage value V**2** changes cosineally with respect to the electrical angle θ in synchronization with the first voltage value V**1**. In short, the first voltage value V**1** and the second voltage value V**2** change with respect to the electrical angle θ as shown in FIG. **9**. Based on the above situation and the following formula F**1**, which is a trigonometric formula, it is considered that the determination value Vx calculated from the following formula F**2** will be a constant value even if the electrical angle θ changes, if there is no error in each detection signal.

$$\sin^2\theta + \cos^2\theta = 1 \quad \text{(F1)}$$

$$Vx = V1^2 + V2^2 \quad \text{(F2)}$$

[0167] Therefore, in step S**01** of FIG. **14**, the determination value Vx is calculated from the above formula F**2** based on the first voltage value V**1** and the second voltage value V**2**. After executing S**01**, the process proceeds to S**02**.

[0168] In step S**02**, the first failure detection unit **473** detects a failure based on the determination value Vx. Specifically, the failure detected in step S**02** is a failure in a component of the position detection device **1** that is related to the detection signal output from the first receiver coils **34**, **36** or the detection signal output from the second receiver coils **35**, **37**.

[0169] In detail, as described above, it is ideal that the determination value Vx does not vary with respect to the electrical angle θ. Therefore, when the variation of the determination value Vx with respect to the electrical angle θ exceeds a predetermined limit, the first failure detection unit **473** determines that a failure has occurred. In other words, the first failure detection unit **473** determines that a failure has been detected.

[0170] For example, it may be determined that a failure has been detected when the determination value Vx calculated from the above formula F**2** falls outside a predetermined allowable range including an ideal value of the determination value Vx. The ideal value of the determination value Vx is the determination value Vx when there is no error between the first voltage value V**1** and the second voltage value V**2**. Alternatively, it may be determined that a failure has been detected when the rate at which the determination value Vx calculated from the above formula F**2** varies with respect to the electrical angle θ (i.e., the rate of variation) exceeds a predetermined limit value.

[0171] When it is determined in step S**02** that a failure has been detected, the process proceeds to step S**03**. On the other hand, when it is determined that no failure has been detected, this flow chart ends and a new flow chart starts again from step S**01**.

[0172] In step S**03**, the first failure detection unit **473** outputs a signal indicating that a failure has been detected. An output indicating that a failure has been detected is input to the external electronic controller **72** via the first terminal **49**.

[0173] The detection of a failure based on the first voltage value V**1** and the second voltage value V**2** is as described above. Since the operation of the second failure detection unit **483** shown in FIG. **13** is similar to the operation of the first failure detection unit **473** described above, a description of the operation of the second failure detection unit **483** will be omitted.

[0174] (1) As described above, according to the present embodiment, the first failure detection unit **473** in FIG. **13** detects a failure based on the determination value Vx obtained from the above formula F**2**. Therefore, a failure can be detected without requiring any additional structure. For example, high functional safety can be provided without the need to increase the size of the substrate **30**. Furthermore, since the number of patterns required for failure detection does not increase, it is easy to increase the pattern area per receiver coil, which ensures the amplitude of the detection signal and improves robustness against misalignment of the rotary member **20**.

[0175] Here, in order to explain the effects of the present embodiment, a following first comparative example will be considered. For example, in the first comparative example, the first sensor output which is output from the first system **305** increases as the rotation angle of the rotary member **20** increases, as indicated by a dashed line L**1** in FIG. **15**. The second sensor output from the second system **306** decreases as the rotation angle of the rotary member **20** increases, as indicated by a solid line L**2** in FIG. **15**. In short, the first sensor output and the second sensor output are set to have an

inverse correlation with each other with respect to the rotation angle of the rotary member **20**.

[0176] In the case of this first comparative example, the sum of the first sensor output and the second sensor output will be a constant value if it is normal and there is no error, so by monitoring the sum of the first and second sensor outputs, it is possible to detect a failure (in other words, determine whether there is an abnormality). However, in the first comparative example, although it is possible to detect a failure, it is not possible to determine which of the first and second sensor outputs is the normal value when a failure is detected.

[0177] In contrast, in the present embodiment, it is possible to determine whether or not a failure has occurred in each of the first system **305** and the second system **306**. Therefore, even if a failure is detected in one of the first system **305** and the second system **306**, it is possible to detect the rotation angle of the rotary member **20** using the other system which is functioning normally.

[0178] The present embodiment is similar to the first embodiment, except for the above described aspects. Thus, the present embodiment can achieve the advantages obtained by the configuration common to the first embodiment described above in a similar manner as in the first embodiment.

[0179] The present embodiment is a modification based on the first embodiment and can also be combined with any of the second to the fourth embodiments described above.

Sixth Embodiment

[0180] A sixth embodiment is described next. The present embodiment is explained mainly with respect to points different from those of the first embodiment.

[0181] As shown in FIGS. **16** to **18**, in the present embodiment, the rotary member **20** (see FIG. **1**) of the first embodiment is made up of two parts. That is, in the present embodiment, the position detection device **1** includes a first target member **16** and a second target member **18** combined with each other, instead of the rotary member **20** of the first embodiment. The first target member **16** and the second target member **18** in the present embodiment correspond as a whole to the rotary member **20** in the first embodiment, and therefore the rotary shaft center CL is the center of rotation of the first target member **16** and the second target member **18**. The first target member **16** and the second target member **18** are made of metal, similar to the rotary member **20** of the first embodiment.

[0182] An overall shape of the first target member **16** and the second target member **18** of the present embodiment combined is the same as that of the rotary member **20** of the first embodiment when viewed in the direction along the member axial direction Da. For example, when viewed in the direction along the member axis direction Da, the shape and arrangement of each of the targets **22** to **25** are the same as those in the first embodiment. FIG. **16** is a cross-sectional view taken along line XVI-XVI of FIG. **17**.

[0183] The first target member **16** has a first connecting portion **161** and two first targets **22** and **23**. In addition, the second target member **18** has a second connecting portion **181** and two second targets **24** and **25**. For example, the first target member **16** is configured as a single part including a first connecting portion **161** and two first targets **22**, **23**, and the second target member **18** is configured as a single part including a second connecting portion **181** and two second targets **24**, **25**.

[0184] The first connecting portion **161** and the second connecting portion **181** as a whole correspond to the connecting portion **21** of the first embodiment. Specifically, the first connecting portion **161** is disposed in the central portion of the first target member **16** and has an annular shape centered on the rotary shaft center CL. The two first targets **22** and **23** are each formed so as to protrude outward from the first connecting portion **161** in the member radial direction Dr, and are disposed outward from the second connecting portion **181** in the member radial direction Dr. A first insertion hole **161***a* is formed on the inside of the first connecting portion **161**, penetrating the first connecting portion **161** in the member axial direction Da, and the rotary shaft **70** is inserted into the first insertion hole **161***a*. As a result, the first connecting portion **161** is connected to the rotary shaft **70** without connecting to the second target member **18** so as to be unable to rotate relatively to the rotary shaft **70**.

[0185] The second connecting portion **181** is stacked on one side of the first connecting portion **161** in the member axial direction Da. The second connecting portion **181** has a shape similar to that of the first connecting portion **161** when viewed in the direction along the member axis direction Da.

[0186] That is, the second connecting portion **181** is disposed in the central portion of the second target member **18** and has an annular shape centered on the rotary shaft center CL. The two second targets **24** and **25** are each formed so as to protrude outward from the second connecting portion **181** in the member radial direction Dr, and are disposed outward from the first connecting portion **161** in the member radial direction Dr. A second insertion hole **181***a* is formed on the inner side of the second connecting portion **181**, penetrating the second connecting portion **181** in the member axial direction Da.

[0187] The second insertion hole **181***a* is concentric with and has the same diameter as the first insertion hole **161***a*, and is disposed so as to continue from the first insertion hole **161***a* in the member axial direction Da. In short, the first insertion hole **161***a* and the second insertion hole **181***a* are arranged in series to form one through hole. The rotary shaft **70** is also fitted into the second insertion hole **181***a* in the same manner as the first insertion hole **161***a*. As a result, the second connecting portion **181** is connected to the rotary shaft **70** without connecting to the first target member **16** so as to be unable to rotate relatively to the rotary shaft **70**.

[0188] In detail, the rotary shaft **70** has a cylindrical shaft body **701** and two protrusions **702***b* and **702***c*. The shaft body **701** is a portion of the rotary shaft **70** that is fitted and accommodated inside the first insertion hole **161***a* and the second insertion hole **181***a*. Each of one-side protrusion **702***b*, which is one of the two protrusions **702***b*, **702***c*, and the other-side protrusion **702***c*, which is the other of the two protrusions **702***b*, **702***c*, protrudes outward from the shaft body **701** in the member radial direction Dr. The one-side protrusion **702***b* and the other-side protrusion **702***c* each have a rectangular cross section, extend in the member axial direction Da, and are disposed at intervals in the member circumferential direction Dc. For example, the two protrusions **702***b*, **702** *c* may be integral with the shaft body **701**, or may be formed of a key member fitted into a key groove provided in the shaft body **701**.

[0189] In addition to the first insertion hole **161***a* described above, the first connecting portion **161** is formed with two first fitting grooves **161***b* and **161***c* connected to the first insertion hole **161***a*. One of the two first fitting grooves **161***b*, **161***c* is referred to as a first one-side fitting groove **161***b*, and the other of the two first fitting grooves **161***b*, **161***c* is referred to as a first other-side fitting groove **161***c*. When viewed in a direction along the member axial direction Da, the two first fitting grooves **161***b*, **161***c* are each formed as grooves recessed outward from the first insertion hole **161***a* in the member radial direction Dr, and are arranged at intervals from each other in the member circumferential direction Dc.

[0190] Similarly, in the second connecting portion **181**, in addition to the above-mentioned second insertion hole **181***a*, two second fitting grooves **181***b*, **181***c* connected to the second insertion hole **181***a* are formed. One of the two second fitting grooves **181***b*, **181***c* is referred to as a second one-side fitting groove **181***b*, and the other of the two second fitting grooves **181***b*, **181** *c* is referred to as a second other-side fitting groove **181***c*. When viewed in a direction along the member axial direction Da, the two second fitting grooves **181***b*, **181** *c* are each formed as grooves recessed outward from the second insertion hole **181***a* in the member radial direction Dr, and are arranged at intervals from each other in the member circumferential direction Dc.

[0191] Furthermore, when viewed in the direction along the member axial direction Da, the second one-side fitting groove **181***b* has the same shape and is arranged in the same manner as the first one-side fitting groove **161***b*, and the second other-side fitting groove **181***c* has the same shape and is arranged in the same manner as the first other-side fitting groove **161***c*. In short, the first one-side fitting groove **161***b* and the second one-side fitting groove **181***b* are arranged in series so as to be continuously connected in the member axial direction Da, forming a single groove extending in the member axial direction Da. Similarly, the first other-side fitting groove **161***c* and the second other-side fitting groove **181***c* are arranged in series so as to be continuously connected in the member axial direction Da, forming a single groove extending in the member axial direction Da.

[0192] The one-side protrusion **702***b* of the rotary shaft **70** is fitted into the first one-side fitting groove **161***b* and the second one-side fitting groove **181***b*, and the other-side protrusion **702***c* of the rotary shaft **70** is fitted into the first other-side fitting groove **161***c* and the second other-side fitting groove **181***c*.

[0193] In the first target member **16**, the facing surface **22***a* of the first one-side target **22** and the facing surface **23***a* of the first other-side target **23** are each disposed on one side of the first connecting portion **161** in the member axis direction Da. Therefore, a step in the member axial direction Da is formed between the facing surface **22***a* of the first one-side target **22** and the first connecting portion **161**, and a step in the member axial direction Da is also formed between the facing surface **23***a* of the first other-side target **23** and the first connecting portion **161**.

[0194] As a result, in the present embodiment, similarly to the first embodiment, the axial distances AG between the substrate **30** and the facing surfaces **22***a*, **23***a*, **24***a*, **25***a* of the four targets **22** to **25** are aligned with one another. In other words, the axial distance AG between the substrate **30** and each of the facing surfaces **22***a*, **23***a*, **24***a*, and **25***a* of the four targets **22** to **25** is the same.

[0195] In the present embodiment, similarly to the first embodiment, the thicknesses of the four targets **22** to **25** in the member axial direction Da are the same as each other.

[0196] (1) As described above, according to the present embodiment, the first target member **16** including the two first targets **22**, **23** is connected without the second target member **18** so as to be unable to rotate relative to the rotary shaft **70**. The second target member **18** including the two second targets **24**, **25** is connected to the rotary shaft **70** without the first target member **16** in between so as to be unable to rotate relatively to the rotary shaft **70**.

[0197] Therefore, compared to, for example, a case in which the four targets **22** to **25** are included in a single component, the failure of either one of the first targets **22**, **23** or the second targets **24**, **25** can be mitigated or prevented from affecting the other. This makes it possible to increase the redundancy of the position detection device **1**.

[0198] For example, failure of the first and second target members **16**, **18** may result in the target position being shifted by several degrees from the normal position due to wear, or the axial distance AG between the target and the substrate **30** may change from the normal position. Even if such a failure occurs in one of the first and second target members **16**, **18**, the failure is unlikely to affect the other target member, and the rotational position of the rotary shaft **70** can be detected by the other target member.

[0199] Furthermore, as a failure of one of the first and second target members **16**, **18**, in addition to the above-mentioned wear, slight deformation of that one target member or slight misalignment in the member circumferential direction Dc may also be considered. Even in such a case, the failure is unlikely to affect the other target member, and the rotational position of the rotary shaft **70** can be detected by the other target member.

[0200] (2) Furthermore, according to the present embodiment, the first insertion hole **161***a* and the second insertion hole **181***a* are arranged to be connected to each other in the member axial direction Da. The first one-side fitting groove **161***b* and the second one-side fitting groove **181***b* are also arranged to be connected to each other in the member axial direction Da, and the first other-side fitting groove **161***c* and the second other-side fitting groove **181***c* are also arranged to be connected to each other in the member axial direction Da. The one-side protrusion **702***b* of the rotary shaft **70** is fitted into the first one-side fitting groove **161***b* and the second one-side fitting groove **181***b*, and the other-side protrusion **702***c* of the rotary shaft **70** is fitted into the first other-side fitting groove **161***c* and the second other-side fitting groove **181***c*.

[0201] Therefore, the first target member **16** is connected without passing through the second target member **18** so that it cannot rotate relative to the rotary shaft **70**, and the second target member **18** is connected without passing through the first target member **16** so that it cannot rotate relative to the rotary shaft **70**. Furthermore, the configuration in which the first and second target members **16**, **18** are connected to the rotary shaft **70** can be realized with a simple structure.

[0202] (3) Furthermore, according to the present embodiment, the facing surfaces **22***a* and **23***a* of the two first targets **22** and **23** are each disposed on one side of the first connecting portion **161** in the member axis direction Da. This ensures that the axial distance AG between the substrate **30** and the facing surfaces **22***a*, **23***a* of the first targets **22**, **23** and the axial distance AG between the substrate **30**

and the facing surfaces **24***a*, **25***a* of the second targets **24**, **25** are aligned with each other. Therefore, it is possible to easily attach the first target member **16** and the second target member **18** to the rotary shaft **70** by combining them, and to make the outputs of the receiver coils **34** to **37** and **40** to **43** approximately equal in magnitude.

[0203] The present embodiment is similar to the first embodiment, except for the above described aspects. Thus, the present embodiment can achieve the advantages obtained by the configuration common to the first embodiment described above in a similar manner as in the first embodiment.

[0204] Although the present embodiment is a modification based on the first embodiment, the present embodiment can be combined with any of second to fifth embodiments described above.

Seventh Embodiment

[0205] A seventh embodiment is described next.

[0206] The angular position sensor described in Patent Document 1 utilizes electromagnetic induction to detect the rotational position of a rotary member, which serves as a detection object that rotates about a rotary shaft center. Specifically, the angular position sensor of Patent Document 1 includes a pair of transmitter coils that generate an AC magnetic field, and a pair of receiver coil groups.

[0207] Each of the pair of receiver coil groups includes a plurality of receiver coils, and one of the pair of receiver coil groups is disposed on the opposite side of the rotary shaft center from the other receiver coil group. One of the pair of transmitter coils is formed so as to surround one of the receiver coil groups, and the other of the pair of transmitter coils is formed so as to surround the other receiver coil group.

[0208] Here, in a position detection device such as the angular position sensor of Patent Document 1, there is a concern that the rotary member may become misaligned with respect to the substrate having the transmitter coil and receiver coil.

[0209] However, in the angular position sensor of Patent Document 1, no measures are taken against misalignment of the rotary member with respect to the substrate. Therefore, misalignment of the rotary member has a large effect on the output of the angular position sensor that indicates the rotational position of the rotary member. For example, misalignment of the rotary member can lead to a decrease in the detection accuracy of the rotational position of the rotary member.

[0210] In contrast, in the present embodiment, it is possible to easily obtain a configuration that can reduce the effect of misalignment of the rotary member on the output of the position detection device that indicates the rotational position of the rotary member, in other words, a configuration that is resistant to misalignment of the rotary member.

[0211] Specifically, the present embodiment is similar to the first embodiment. Therefore, in the present embodiment, it is possible to obtain the same effects as in the first embodiment, which are achieved by the configuration common to the first embodiment described above.

Summary of the Seventh Embodiment:

[0212] The seventh embodiment is configured as described above. Therefore, in summary, it can be said that the seventh embodiment has the following aspects.

An Aspect 1:

[0213] A position detection device includes:

[0214] a rotary member (**16**, **18**, **20**) having a first one-side target (**22**), a first other-side target (**23**), a second one-side target (**24**), and a second other-side target (**25**), and rotating about a predetermined rotary shaft center (CL); and

[0215] a substrate (**30**) having a first transmitter coil (**31**, **311**, **312**), a second transmitter coil (**32**, **321**, **322**), a first one-side receiver coil (**34**) and a second one-side receiver coil (**35**) constituting a first one-side receiver coil group (**301***a*) in which an electromotive force corresponding to a position of the first one-side target is generated by electromagnetic induction due to energization of the first transmitter coil, a first other-side receiver coil (**36**) and a second other-side receiver coil (**37**) constituting a first other-side receiver coil group (**302***a*) in which an electromotive force corresponding to a position of the first other-side target is generated by electromagnetic induction due to energization of the first transmitter coil, a third one-side receiver coil (**40**) and a fourth one-side receiver coil (**41**) constituting a second one-side receiver coil group (**303***a*) in which an electromotive force corresponding to a position of the second one-side target is generated by electromagnetic induction due to energization of the second transmitter coil, and a third other-side receiver coil (**42**) and a fourth other-side receiver coil (**43**) constituting a second other-side receiver coil group (**304***a*) in which an electromotive force corresponding to a position of the second other-side target is generated by electromagnetic induction due to energization of the second transmitter coil. The substrate is disposed to face the first one-side target, the first other-side target, the second one-side target, and the second other-side target, with an axial direction (Da) of the rotary shaft center being a normal direction, and on one side in the axial direction relative to the first one-side target, the first other-side target, the second one-side target, and the second other-side target.

[0216] The first one-side receiver coil and the first other-side receiver coil are connected in series in a direction in which the induced electromotive forces of each other are strengthened.

[0217] The second one-side receiver coil and the second other-side receiver coil are connected in series in a direction in which the induced electromotive forces of each other are strengthened.

[0218] The third one-side receiver coil and the third other-side receiver coil are connected in series in a direction in which the induced electromotive forces of each other are strengthened.

[0219] The fourth one-side receiver coil and the fourth other-side receiver coil are connected in series in a direction in which the induced electromotive forces of each other are strengthened.

[0220] The first one-side target is disposed on an opposite side of the rotary shaft center with respect to the first other-side target.

[0221] The second one-side target is disposed on an opposite side of the rotary shaft center with respect to the second other-side target.

[0222] the first one-side receiver coil group is disposed on an opposite side of the rotary shaft center with respect to the first other-side receiver coil group.

[0223] The second one-side receiver coil group is arranged on the opposite side of the rotary shaft center with respect to the second other-side receiver coil group.

[0224] According to this configuration, the effect of misalignment of the rotary member on the coil output of each of the receiver coils connected in series to each other as described above is offset. Therefore, a configuration that is resistant to misalignment of the rotary member can be easily obtained.

An Aspect 2:

[0225] The position detection device according to aspect 1, wherein, when viewed in a direction along the axial direction, the first one-side receiver coil, the first other-side receiver coil, the second one-side receiver coil, the second other-side receiver coil, the third one-side receiver coil, the third other-side receiver coil, the fourth one-side receiver coil, and the fourth other-side receiver coil are arranged inside the first transmitter coil and inside the second transmitter coil.

An Aspect 3:

[0226] In the position detection device according to aspect 1, the first transmitter coil is provided in two numbers, and the two first transmitter coils include a first one-side transmitter coil (**311**) and a first other-side transmitter coil (**312**).

[0227] The second transmitter coils are also provided in two numbers, and the two second transmitter coils include a second one-side transmitter coil (**321**) and a second other-side transmitter coil (**322**).

[0228] When viewed in a direction along the axial direction, the first one-side receiver coil and the second one-side receiver coil are disposed inside the first one-side transmitter coil, and are disposed outside the first other-side transmitter coil, outside the second one-side transmitter coil, and outside the second other-side transmitter coil.

[0229] When viewed in a direction along the axial direction, the first other-side receiver coil and the second other-side receiver coil are disposed inside the first other-side transmitter coil, and are disposed outside the first one-side transmitter coil, outside the second one-side transmitter coil, and outside the second other-side transmitter coil.

[0230] When viewed in a direction along the axial direction, the third one-side receiver coil and the fourth one-side receiver coil are disposed inside the second one-side transmitter coil, and are disposed outside the first one-side transmitter coil, the first other-side transmitter coil, and the second other-side transmitter coil.

[0231] When viewed in a direction along the axial direction, the third other-side receiver coil and the fourth other-side receiver coil are disposed inside the second other-side transmitter coil, and are disposed outside the first one-side transmitter coil, outside the first other-side transmitter coil, and outside the second one-side transmitter coil.

An Aspect 4:

[0232] The position detection device according to any one of aspects 1 to 3, wherein each of the first one-side receiver coil, the first other-side receiver coil, the second one-side receiver coil, the second other-side receiver coil, the third one-side receiver coil, the third other-side receiver coil, the fourth one-side receiver coil, and the fourth other-side receiver coil has a plurality of spiral sections (**34***a*, **34***b*, **35***a*, **35***b*, **36***a*, **36***b*, **37***a*, **37***b*, **40***a*, **40***b*, **41** *a*, **41***b*, **42***a*, **42***b*, **43***a*, **43***b*) that form a spiral pattern when viewed in a direction along the axial direction.

An Aspect 5:

[0233] The position detection device according to any one of aspects 1 to 3, wherein each of the first one-side receiver coil, the first other-side receiver coil, the second one-side receiver coil, the second other-side receiver coil, the third one-side receiver coil, the third other-side receiver coil, the fourth one-side receiver coil, and the fourth other-side receiver coil has a plurality of wavy sections (**34***d*, **34***e*, **35***d*, **35***e*, **36***d*, **36***e*, **37***d*, **37***e*, **40***d*, **40***e*, **41***d*, **41***e*, **42***d*, **42***e*, **43***d*, **43***e*) forming a pattern shape that draws a sinusoidal curve when viewed in a direction along the axial direction.

Other Embodiments

[0234] (1) In each of the above embodiments, the position detection device **1** is used, for example, to detect the rotational position of a brake pedal or accelerator pedal for a vehicle, but the use of the position detection device **1** is not limited to this and can be assumed in various ways. The position detection device **1** may also be used for applications other than for vehicles.

[0235] (2) In each of the above mentioned embodiments, for example, as shown in FIG. **1**, the movement direction of targets **22** to **25** is the member circumferential direction Dc, but this is just one example. For example, the targets **22** to **25** may linearly reciprocate, and the position detection device **1** may detect the position of the targets **22** to **25** in the movement direction.

[0236] (3) In each of the above mentioned embodiments, all four targets **22** to **25** have the same circular-sector shape, as shown in FIG. **1**, but this is just one example. The shape of the targets **22** to **25** does not have to have the circular-sector shape, and the shapes of the targets **22** to **25** may differ from each other.

[0237] (4) In each of the above embodiments, for example, as shown in FIG. **1**, the rotary member **20** has two first targets **22** and **23**, but one of the two first targets **22** and **23** may be omitted. Similarly, one of the two second targets **24** and **25** of the rotary member **20** may be omitted. Further, the rotary member **20** may have three or more first targets **22** and **23** and three or more second targets **24** and **25**.

[0238] (5) In each of the above embodiments, as shown in FIG. **8**, the position detection device **1** has the first system **305** and the second system **306**, which are independent electrical circuits, but the position detection device **1** may have three or more systems that are independent electrical circuits.

[0239] (6) In each of the above-described embodiments, for example as shown in FIG. **5**, the first one-side receiver coil group **301***a* is disposed on the opposite side of the rotary shaft center CL with respect to the first other-side receiver coil group **302***a*. The first system **305** (see FIG. **8**) includes a pair of receiver coil groups **301***a*, **302***a* arranged on both sides of the rotary shaft center CL. However, this is merely an example, and it is also possible to have two or more pairs of receiver coil groups arranged on both sides of the rotary shaft center CL. The same applies to the second system **306**.

[0240] (7) In each of the above-described embodiments, the first system **305** includes the first one-side receiver coil group **301***a* and the first other-side receiver coil group **302***a*. However, this configuration is merely an example. For example, the first system **305** may include only one of the first one-side receiver coil group **301***a* and the first other-side receiver coil group **302***a*, and may not include the other receiver coil group. In this case as well, the waveform of the detection signal output by the first receiver coil belonging to one of the receiver coil groups becomes a sine wave similar to the waveform of the first voltage value V**1** in FIG. **9**. The waveform of the detection signal output by the second receiver coil belonging to one of the receiver coil groups becomes a cosine wave similar to the waveform of the second voltage value V**2** in FIG. **9**. Therefore, for example, failure detection using the control process in FIG. **14** can be performed in the same manner as in the fifth embodiment described above. The same applies to the second system **306**.

[0241] (8) In the above-described sixth embodiment, as shown in FIG. **16**, the one-side protrusion **702***b* and the other-side protrusion **702***c* each have a rectangular cross-section and extend in the member axial direction Da, but their cross-sectional shapes are not limited to rectangular cross-sections. For example, the cross-sectional shape of each of the one-side protrusion **702***b* and the other-side protrusion **702***c* may be various shapes such as a trapezoid, a polygonal shape, or a semicircular shape.

[0242] (9) In each of the above-described embodiments, for example, alternating currents of the same frequency flow through the first transmitter coil **31** and the second transmitter coil **32**. However, this is not limited to the above. For example, as long as the directions of current flowing through the first transmitter coil **31** and the second transmitter coil **32** are not opposite at the same timing, the currents do not have to have the same frequency.

[0243] (10) In the fifth embodiment described above, the process of each step shown in the flowchart of FIG. **14** is implemented by a computer program, but may be implemented by hardware.

[0244] (11) The present disclosure is not limited to the above-described embodiments, and can be implemented in various modifications. The above-described embodiments are not independent of each other, and can be appropriately combined together except when the combination is obviously impossible.

[0245] The constituent element(s) of each of the above embodiments is/are not necessarily essential unless it is specifically stated that the constituent element(s) is/are essential in the above embodiment, or unless the constituent element(s) is/are obviously essential in principle. Furthermore, in each of the above embodiments, in the case where the number of the constituent element(s), the value, the amount, the range, and/or the like is specified, the present disclosure is not necessarily limited to the number of the constituent element(s), the value, the amount, and/or the like specified in the embodiment unless the number of the constituent element(s), the value, the amount, and/or the like is indicated as indispensable or is obviously indispensable in view of the principle of the present disclosure. Further, in each of the embodiments described above, when referring to the material, shape, positional relationship, and the like of the components and the like, except in the case where the components are specifically specified, and in the case where the components are fundamentally limited to a specific material, shape, positional relationship, and the like, the components are not limited to the material, shape, positional relationship, and the like.

[0246] Additionally, the signal processors **47**, **48** and techniques described herein may be implemented by a special purpose computer provided by configuring a processor and memory programmed to perform one or more functions embodied in a computer program. Alternatively, the signal processors **47**, **48** and the techniques described herein may be implemented in a special purpose computer provided by configuring a processor with one or more dedicated hardware logic circuits. Alternatively, the signal processors **47**, **48** and techniques described herein may be implemented using one or more special purpose computers configured using a combination of a processor and memory programmed to perform one or more functions, and a processor configured using one or more hardware logic circuits. The computer programs may be stored, as instructions to be executed by a computer, in a tangible non-transitory computer-readable medium.

Various Aspects of Present Disclosure:

[0247] The present disclosure described above can be understood from the following features, for example.

Aspect 1:

[0248] A position detection device includes:

- **[0249]** a first target (**22**, **23**) that reciprocates in a predetermined movement direction (Dc);
- **[0250]** a second target (**24**, **25**) that reciprocates in the movement direction together with the first target; and
- **[0251]** a substrate (**30**) having a first transmitter coil (**31**, **311**, **312**) and a second transmitter coil (**32**, **321**, **322**), a first receiver coil (**34**, **36**) and a second receiver coil (**35**, **37**) that generate an induced current due to electromagnetic induction caused by an energization of the first transmitter coil, outputting detection signals (V**1**, V**2**) corresponding to a position of the first target, and a third receiver coil (**40**, **42**) and a fourth receiver coil (**41**, **43**) that generate an induced current due to electromagnetic induction caused by an energization of the second transmitter coil, outputting detection signals corresponding to a position of the second target. The substrate is disposed to face both the first target and the second target, with a normal direction (Da) defined as a direction intersecting the movement direction, and on one side of the normal direction relative to the first target and the second target.

[0252] A first receiving area (**301**, **302**) occupied by the first receiver coil and the second receiver coil in the substrate, and a second receiving area (**303**, **304**) occupied by the third receiver coil and the fourth receiver coil in the substrate are arranged side by side in the movement direction.

[0253] The first target reciprocates within a movement range (W**1***a*, W**1***b*) in which the first target does not overlap with the other side opposite to the one side in the normal direction with respect to the second receiving area.

Aspect 2:

[0254] The position detection device according to aspect 1, wherein the movement range of the first target is a range

allocated in the movement direction centered on a center position (**301***b*, **302***b*) of the first receiving area in the movement direction.

Aspect 3:

[0255] The position detection device according to aspect 1 or 2, wherein the first target reciprocates in the movement direction without departing from a range between the one side corresponding to an end position (P**1**) on one side of the first receiving area in the movement direction and the other side corresponding to an end position (P**2**) on the other side of the first receiving area.

Aspect 4:

[0256] The position detection device according to any one of aspects 1 to 3, wherein, when viewed in a direction along the normal direction of the substrate, the first receiver coil, the second receiver coil, the third receiver coil, and the fourth receiver coil are arranged inside the first transmitter coil and inside the second transmitter coil.

Aspect 5:

[0257] The position detection device according to any one of aspects 1 to 3, wherein, when viewed in a direction along the normal direction of the substrate, the first receiver coil and the second receiver coil are arranged inside the first transmitter coil and are arranged outside the second transmitter coil, and the third receiver coil and the fourth receiver coil are arranged inside the second transmitter coil and arranged outside the first transmitter coil.

Aspect 6:

[0258] The position detection device according to any one of aspects 1 to 5, wherein each of the first receiver coil, the second receiver coil, the third receiver coil and the fourth receiver coil has a plurality of spiral sections (**34***a*, **34***b*, **35***a*, **35***b*, **36***a*, **36***b*, **37***a*, **37***b*, **40***a*, **40***b*, **41** *a*, **41***b*, **42***a*, **42***b*, **43***a*, **43***b*) that form a spiral pattern shape when viewed in a direction along the normal direction of the substrate.

Aspect 7:

[0259] The position detection device according to any one of aspects 1 to 5, wherein each of the first receiver coil, the second receiver coil, the third receiver coil and the fourth receiver coil has a plurality of wavy sections (**34***d*, **34***e*, **35***d*, **35***e*, **36***d*, **36***e*, **37***d*, **37***e*, **40***d*, **40***e*, **41***d*, **41** *e*, **42***d*, **42***e*, **43***d*, **43***e*) forming a pattern shape that describes a sinusoidal curve when viewed in a direction along the normal direction of the substrate.

Aspect 8:

[0260] The position detection device according to any one of aspects 1 to 7 includes a failure detection unit (**473**, **483**) that detects a fault based on a value (Vx) obtained from "$V1^2+V2^2$" when a magnitude of a detection signal output by the first receiver coil is defined as V**1** and a magnitude of a detection signal output by the second receiver coil is defined as V**2**.

[0261] The detection signal of the first receiver coil changes sinusoidally with respect to an electrical angle (θ) corresponding to a position of the first target.

[0262] The detection signal of the second receiver coil changes in a cosine wave shape with respect to the electrical angle.

Aspect 9:

[0263] In the position detection device according to any one of aspects 1 to 8, the first target and the second target each constitute a part of a rotary member (**16**, **18**, **20**) that rotates around an axis (CL) whose axial direction is the normal direction.

[0264] The movement direction is a circumferential direction (Dc) of the axis.

Aspect 10:

[0265] In the position detection device according to aspect 9, two first targets are provided, and one first target (**22**), which is one of the two first targets, is disposed on an opposite side of the axis to the other first target (**23**).

[0266] Two receiver coil groups (**301***a*, **302***a*) configured as a combination of the first receiver coil and the second receiver coil are provided, and one of the two receiver coil groups (**301***a*) is positioned on an opposite side of the axis from the other receiver coil group (**302***a*).

Aspect 11:

[0267] In the position detection device according to aspect 10, the first receiver coil (**34**) belonging to one of the receiver coil groups and the first receiver coil (**36**) belonging to the other receiver coil group are electrically connected to each other.

[0268] The second receiver coil (**35**) belonging to the one of the receiver coil groups and the second receiver coil (**37**) belonging to the other of the receiver coil groups are also electrically connected.

Aspect 12:

[0269] In the position detection device according to aspect 10, the first receiver coil (**34**) belonging to one of the receiver coil groups and the first receiver coil (**36**) belonging to the other receiver coil group are connected in series in a direction in which the induced electromotive force generated by the electromagnetic induction of the first transmitter coil are strengthened with each other.

[0270] The second receiver coil (**35**) belonging to one of the receiver coil groups and the second receiver coil (**37**) belonging to the other receiver coil group are connected in series in a direction in which induced electromotive forces generated by the electromagnetic induction of the first transmitter coil are strengthened with each other.

Aspect 13:

[0271] The position detection device according to any one of aspects 1 to 12 includes a first target member (**16**) having the first target, and a second target member (**18**) having the second target.

[0272] The first target member is connected to the detection object (**70**) without an intermediary of the second target member so as to be unable to move relative to the detection object in the movement direction.

[0273] The second target member is connected to the detection object without an intermediary of the first target

member so as to be unable to move relative to the detection object in the movement direction.

Aspect 14:

[0274] The position detection device according to any one of aspects 1 to 8 includes a first target member (**16**) including the first target, and having a first insertion hole (**161***a*) into which a detection object (**70**) rotating around an axis (CL) whose axial direction is the normal direction is inserted and a first fitting groove (**161***b*, **161***c*) connected to the first insertion hole, and a second target member (**18**) including the second target, the second target member (**18**) having a second insertion hole (**181***a*) into which the detection object is inserted and a second fitting groove (**181***b*, **181***c*) connected to the second insertion hole.

[0275] The movement direction is a circumferential direction (Dc) of the axis.

[0276] The first insertion hole and the second insertion hole are arranged to be connected to each other in the axial direction.

[0277] The first fitting groove and the second fitting groove are also arranged to be connected to each other in the axial direction.

[0278] A protrusion (**702***b*, **702***c*) provided on the detection object and protruding outward in the radial direction (Dr) of the axis is fitted into the first fitting groove and the second fitting groove.

Aspect 15:

[0279] In the position detection device according to aspect 13 or 14, the first target has a facing surface (**22***a*, **23***a*) formed on the one side of the normal direction and facing the substrate.

[0280] The second target has a facing surface (**24***a*, **25***a*) formed on the one side of the normal direction and facing the substrate.

[0281] The first target member has a first connecting portion (**161**) that is connected to the detection object.

[0282] The second target member has a second connecting portion (**181**) that is arranged on the one side in the normal direction with respect to the first connecting portion and is connected to the detection object.

[0283] The facing surface of the first target is located on one side of the first connection portion in the normal direction, so that a distance (AG) between the facing surface of the first target and the substrate in the normal direction and a distance (AG) between the facing surface of the second target and the substrate are aligned with each other.

What is claimed is:

1. A position detection device, comprising:

a first target configured to reciprocate in a predetermined movement direction;

a second target configured to reciprocate in the movement direction together with the first target; and

a substrate

including

a first transmitter coil and a second transmitter coil,

a first receiver coil and a second receiver coil that receive an induced current due to electromagnetic induction caused by an energization of the first transmitter coil, and output detection signals corresponding to a position of the first target, and

a third receiver coil and a fourth receiver coil that receive an induced current due to electromagnetic induction caused by an energization of the second transmitter coil, and output detection signals corresponding to a position of the second target, and

being disposed to face both the first target and the second target, with a normal direction defined as a direction intersecting the movement direction, and on one side of the normal direction relative to the first target and the second target, wherein

a first receiving area occupied by the first receiver coil and the second receiver coil in the substrate, and a second receiving area occupied by the third receiver coil and the fourth receiver coil in the substrate are arranged side by side in the movement direction, and

the first target reciprocates within a movement range in which the first target does not overlap with the other side opposite to the one side in the normal direction with respect to the second receiving area.

2. The position detection device according to claim **1**, wherein

the movement range of the first target is a range allocated in the movement direction centered on a center position of the first receiving area in the movement direction.

3. The position detection device according to claim **1**, wherein

the first target reciprocates in the movement direction without departing from a range between the one side corresponding to an end position on one side of the first receiving area in the movement direction and the other side corresponding to an end position on the other side of the first receiving area.

4. The position detection device according to claim **1**, wherein

when viewed in a direction along the normal direction of the substrate, the first receiver coil, the second receiver coil, the third receiver coil, and the fourth receiver coil are arranged inside the first transmitter coil and inside the second transmitter coil.

5. The position detection device according to claim **1**, wherein

when viewed in a direction along the normal direction of the substrate, the first receiver coil and the second receiver coil are arranged inside the first transmitter coil and are arranged outside the second transmitter coil, and the third receiver coil and the fourth receiver coil are arranged inside the second transmitter coil and arranged outside the first transmitter coil.

6. The position detection device according to claim **1**, wherein

each of the first receiver coil, the second receiver coil, the third receiver coil and the fourth receiver coil has a plurality of spiral sections that form a spiral pattern shape when viewed in a direction along the normal direction of the substrate.

7. The position detection device according to claim **1**, wherein

each of the first receiver coil, the second receiver coil, the third receiver coil and the fourth receiver coil has a plurality of wavy sections forming a pattern shape that describes a sinusoidal curve when viewed in a direction along the normal direction of the substrate.

8. The position detection device according to claim **1**, further comprising,

a failure detection unit that detects a failure based on a value obtained from "$V1^2+V2^2$" when a magnitude of a detection signal output by the first receiver coil is defined as V**1** and a magnitude of a detection signal output by the second receiver coil is defined as V**2**, wherein

the detection signal of the first receiver coil changes sinusoidally with respect to an electrical angle corresponding to the position of the first target, and

the detection signal of the second receiver coil changes cosineally with respect to the electrical angle.

9. The position detection device according to claim **1**, wherein

each of the first target and the second target constitutes a part of a rotary member that rotates around an axis whose axial direction is the normal direction, and

the movement direction is a circumferential direction of the axis.

10. The position detection device according to claim **9**, wherein

two first targets are provided, and one first target, which is one of the two first targets, is disposed on an opposite side of an axis with respect to other first target, which is other of the two first targets, and

two receiver coil groups configured as a combination of the first receiver coil and the second receiver coil are provided, and one of the two receiver coil groups is positioned on the opposite side of the axis with respect to the other of the two receiver coil groups.

11. The position detection device according to claim **10**, wherein

the first receiver coil belonging to one of the receiver coil groups and the first receiver coil belonging to the other receiver coil group are electrically connected to each other, and

the second receiver coil belonging to the one of the receiver coil groups and the second receiver coil belonging to the other of the receiver coil groups are also electrically connected.

12. The position detection device according to claim **10**, wherein

the first receiver coil belonging to one of the receiver coil groups and the first receiver coil belonging to the other receiver coil group are connected in series in a direction in which induced electromotive forces generated by the electromagnetic induction of the first transmitter coil are strengthened with each other, and

the second receiver coil belonging to one of the receiver coil groups and the second receiver coil belonging to the other receiver coil group are connected in series in a direction in which the induced electromotive force generated by the electromagnetic induction of the first transmitter coil are strengthened with each other.

13. The position detection device according to claim **1**, further comprising,

a first target member having the first target, and

a second target member having the second target, wherein

the first target member is connected to a detection object without an intermediary of the second target member so as to be unable to move relative to the detection object in the movement direction, and

the second target member is connected to the detection object without an intermediary of the first target member so as to be unable to move relative to the detection object in the movement direction.

14. The position detection device according to claim **1**, further comprising,

a first target member including the first target, and having a first insertion hole into which a detection object rotating around an axis whose axial direction is the normal direction is inserted and a first fitting groove connected to the first insertion hole, and

a second target member including the second target, and having a second insertion hole into which the detection object is inserted and a second fitting groove connected to the second insertion hole, wherein

the movement direction is a circumferential direction of the axis,

the first insertion hole and the second insertion hole are arranged to be connected to each other in the axial direction,

the first fitting groove and the second fitting groove are arranged to be connected to each other in the axial direction, and

a protrusion provided on the detection object and protruding outward in a radial direction of the axis is fitted into the first fitting groove and the second fitting groove.

15. The position detection device according to claim **13**, wherein

the first target has a facing surface formed on the one side of the normal direction and facing the substrate,

the second target has a facing surface formed on the one side of the normal direction and facing the substrate,

the first target member has a first connecting portion that is connected to the detection object,

the second target member has a second connecting portion that is arranged on the one side in the normal direction with respect to the first connecting portion and is connected to the detection object, and

the facing surface of the first target is located on one side of the first connecting portion in the normal direction, so that a distance between the facing surface of the first target and the substrate in the normal direction and a distance between the facing surface of the second target and the substrate are aligned with each other.

* * * * *