US012414776B2

(12) **United States Patent**
Lu

(10) **Patent No.: US 12,414,776 B2**
(45) **Date of Patent: Sep. 16, 2025**

(54) **CLIP DELIVERY DEVICE, AND RELEASING METHOD OF CLIP UNIT**

(71) Applicant: **OLYMPUS MEDICAL SYSTEMS CORP.**, Tokyo (JP)

(72) Inventor: **Ranwen Lu**, Hino (JP)

(73) Assignee: **Olympus Medical Systems Corp.**, Tokyo (JP)

(*) Notice: Subject to any disclaimer, the term of this patent is extended or adjusted under 35 U.S.C. 154(b) by 395 days.

(21) Appl. No.: **18/114,318**

(22) Filed: **Feb. 27, 2023**

(65) **Prior Publication Data**

US 2023/0277190 A1 Sep. 7, 2023

Related U.S. Application Data

(60) Provisional application No. 63/315,433, filed on Mar. 1, 2022.

(51) **Int. Cl.**

A61B 17/122	(2006.01)
A61B 17/128	(2006.01)
A61B 17/00	(2006.01)

(52) **U.S. Cl.**

CPC ***A61B 17/122*** (2013.01); ***A61B 17/1285*** (2013.01); *A61B 2017/00296* (2013.01)

(58) **Field of Classification Search**

CPC A61B 17/122; A61B 17/1285; A61B 17/1227; A61B 17/1222; A61B 2017/00296; A61B 2017/00292; A61B 2017/0034; A61B 2017/00477; A61B 2017/12004

See application file for complete search history.

(56) **References Cited**

U.S. PATENT DOCUMENTS

11,020,125 B2 6/2021 Randhawa et al.

FOREIGN PATENT DOCUMENTS

JP 2021-035501 A 3/2021

Primary Examiner — Ryan J. Severson

(74) *Attorney, Agent, or Firm* — Morgan, Lewis & Bockius LLP

(57) **ABSTRACT**

Clip delivery device has a sheath, a wire inserted into the sheath, and a clip detachably connected to the wire and having arms movable between an open position and a closed position. A tube is adjacent the sheath along a longitudinal axis and contains at least part of the clip and has a convex portion on an inner surface. A connector provided in the sheath has a hook detachably connected with the convex portion. The hook is movable between a first position, in which the hook engages the convex portion and is at a first radial distance from a central axis of the sheath, and a second position, in which the hook is disengaged from the convex portion and is at a second radial distance from the central axis of the sheath, where the first radial distance is greater than the second radial distance, by moving the wire.

20 Claims, 17 Drawing Sheets

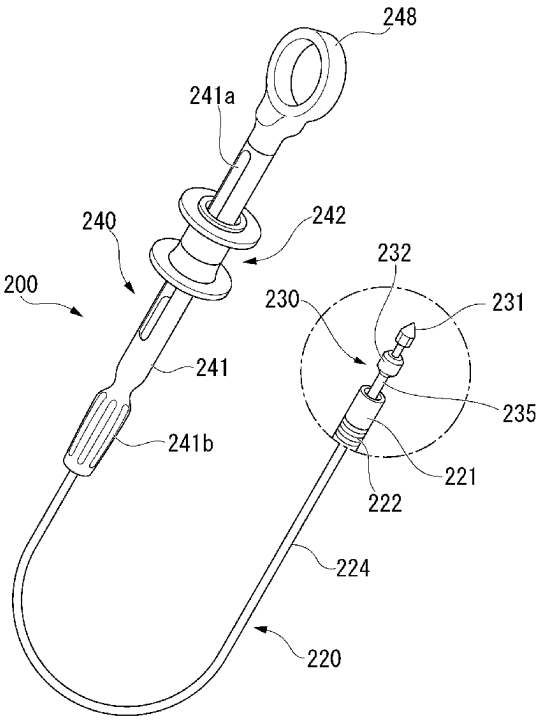

FIG. 1

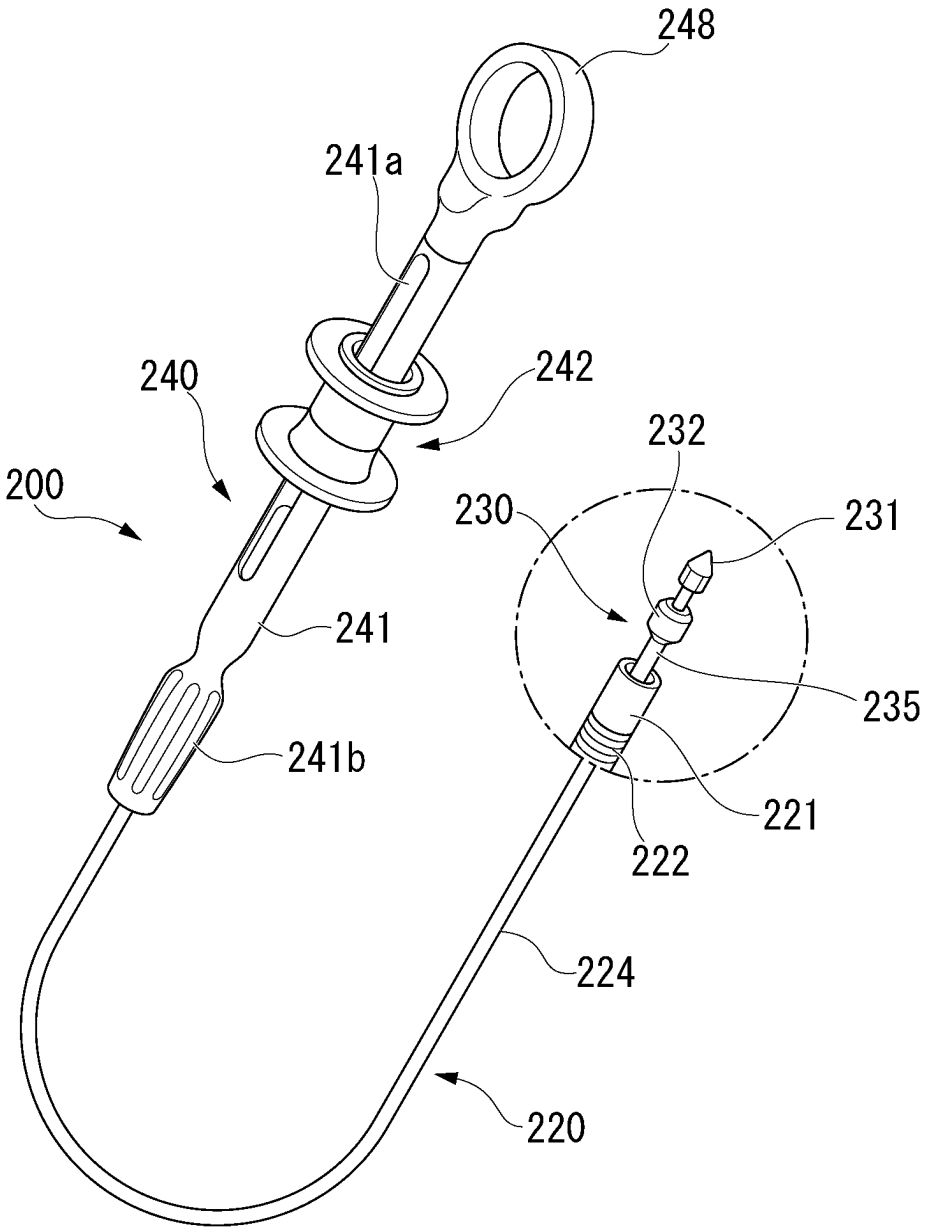

FIG. 2

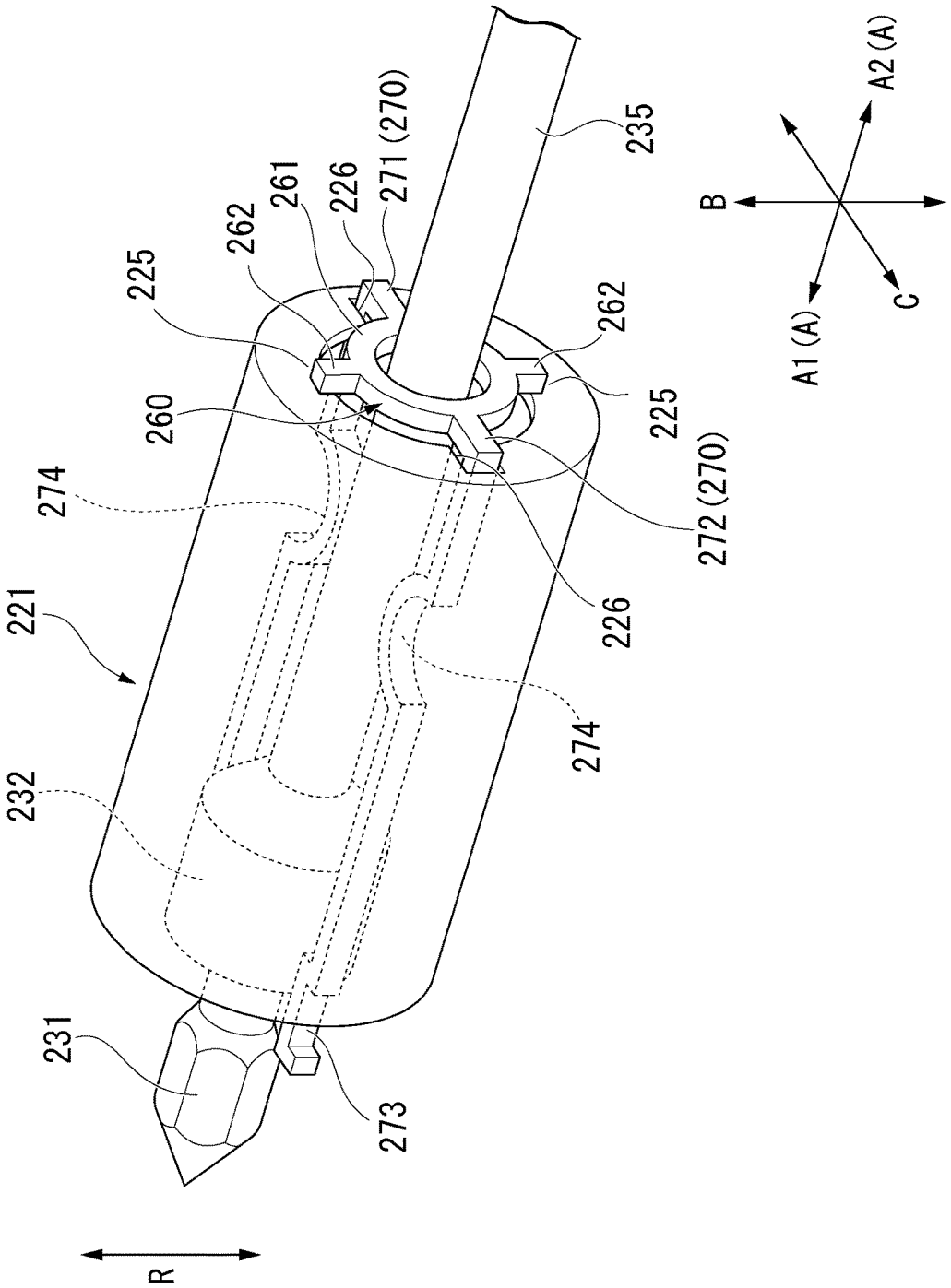
221
232
231
274
260
225
262
261
226
271 (270)
235
273
R
274
226
272 (270)
225
262
B
A2 (A)
A1 (A)
C

FIG. 3

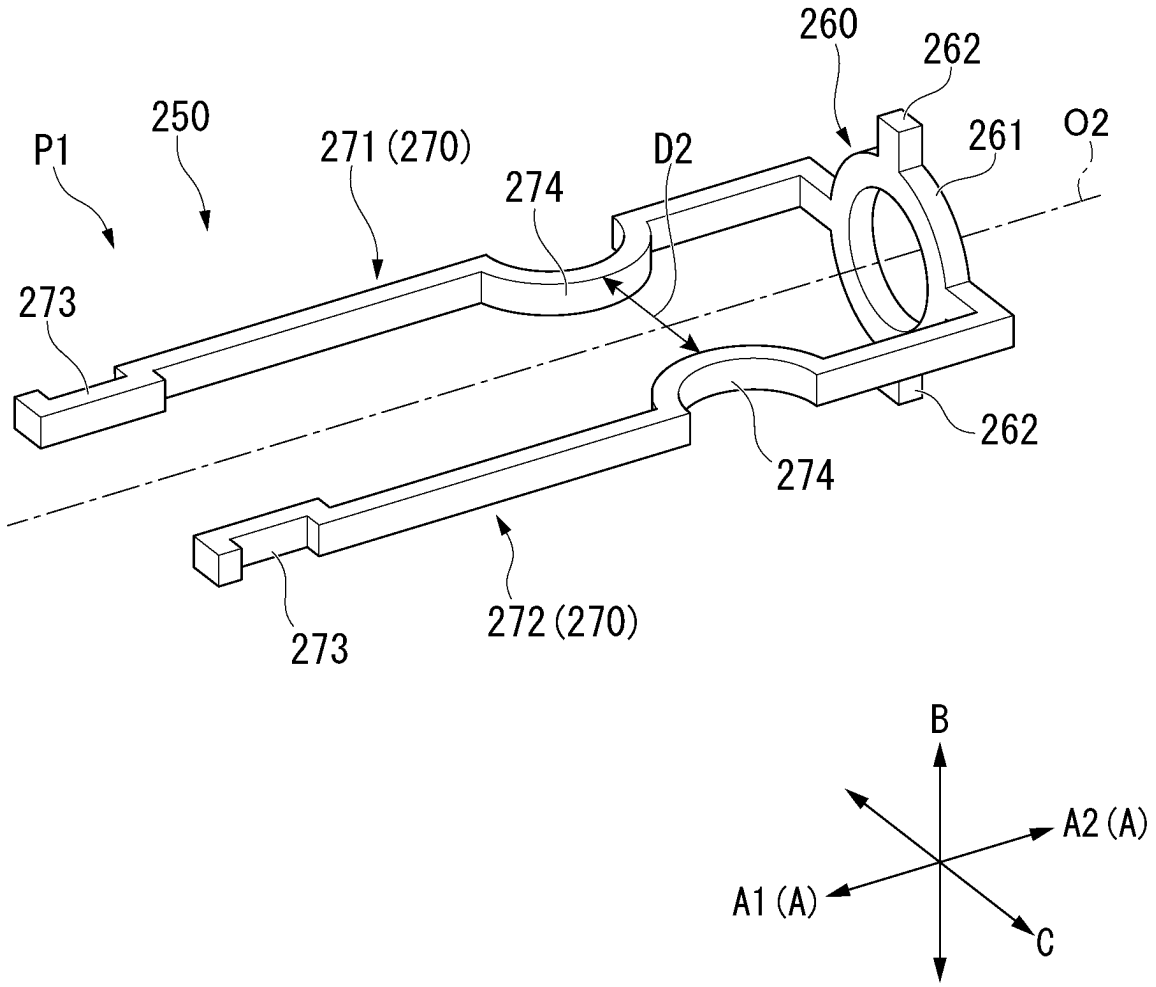
260
262
250
P1
271 (270)
D2
261
O2
274
273
262
274
272 (270)
273
B
A2 (A)
A1 (A)
C

FIG. 4

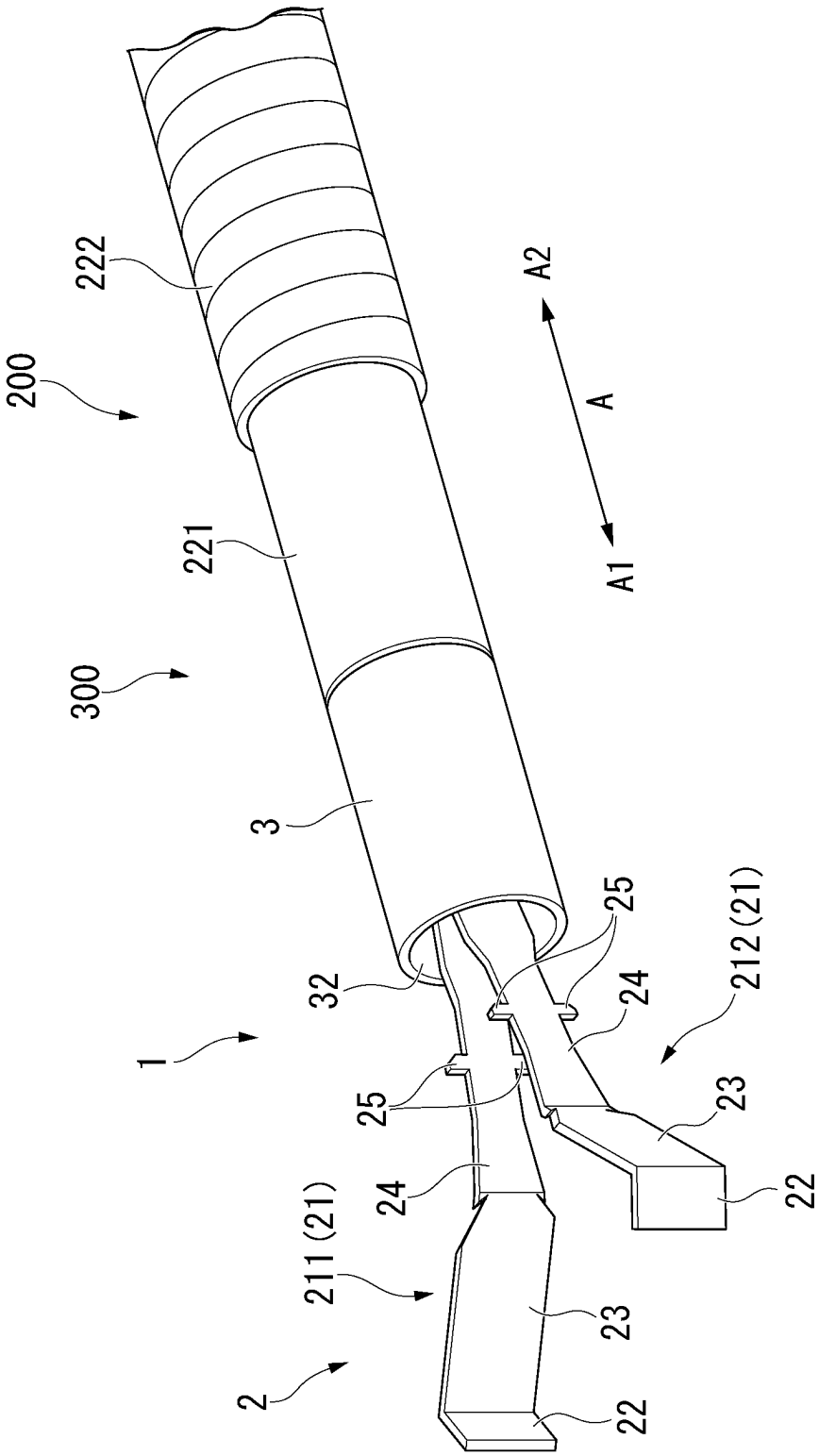

FIG. 5

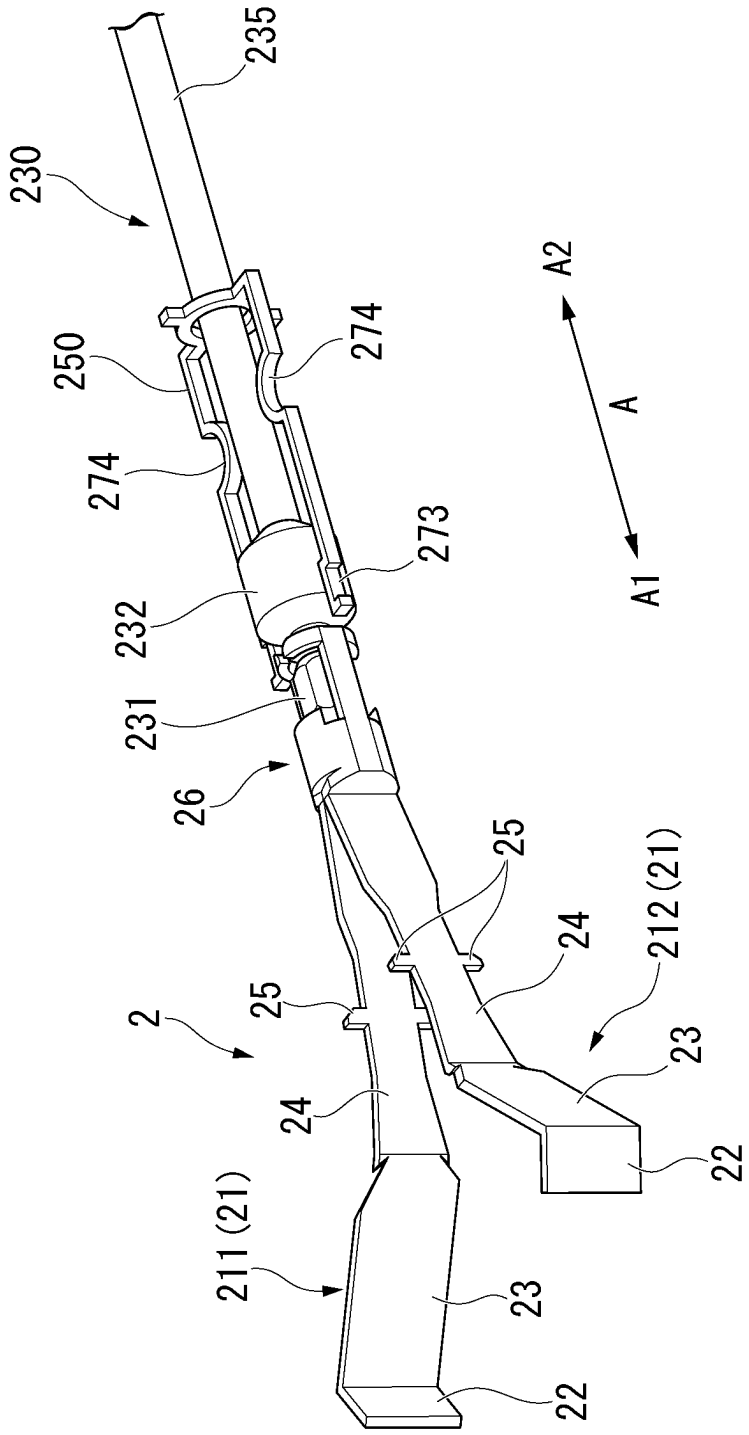
235
230
250
274
274
273
232
231
26
25
25
24
24
2
212 (21)
23
22
211 (21)
23
22
A2
A
A1

FIG. 6

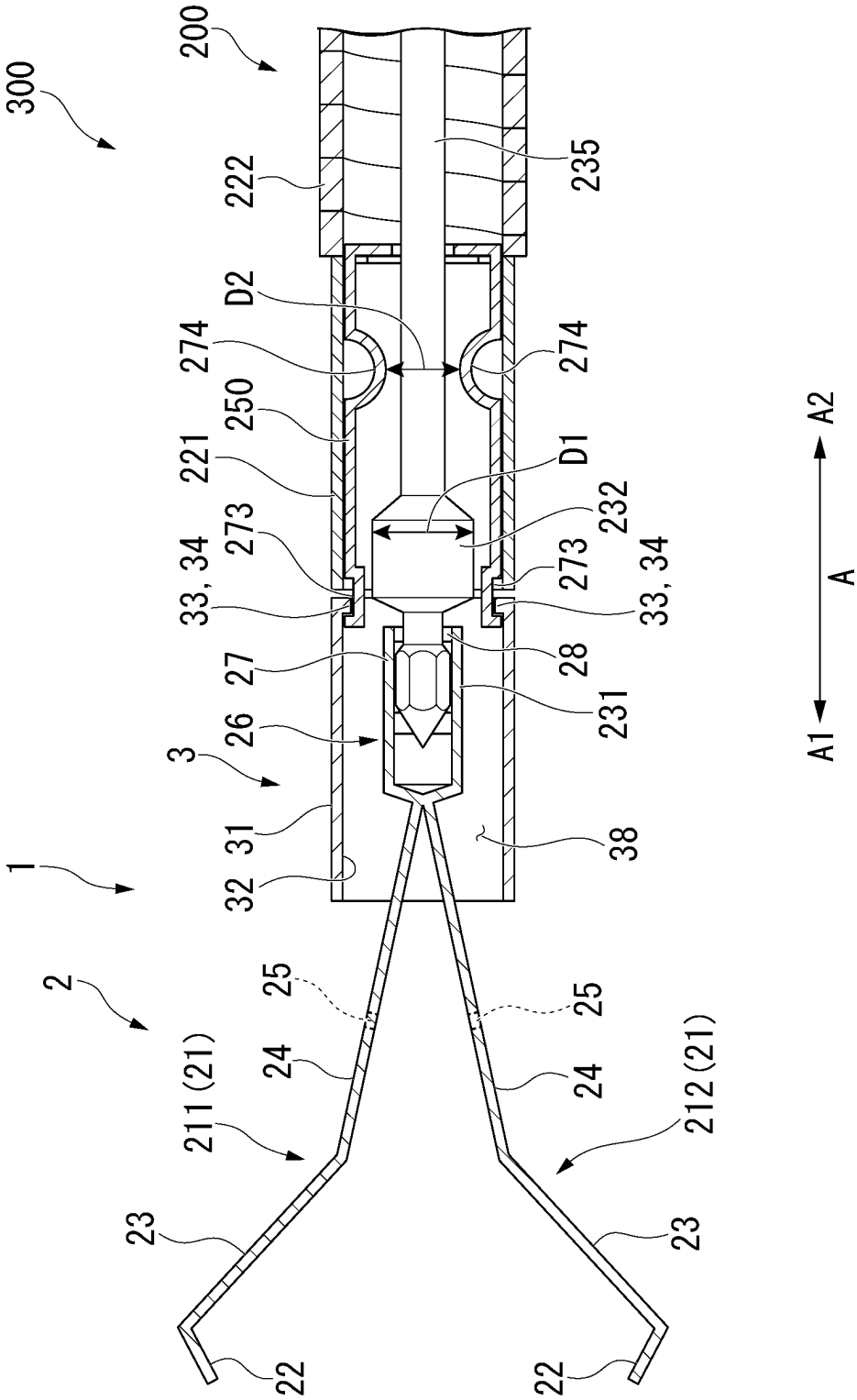
300
200
222
235
D2
274
274
250
221
D1
232
273
33, 34
273
33, 34
27
28
231
26
3
31
38
1
32
2
25
25
24
24
211 (21)
212 (21)
23
23
22
22
A2
A
A1

FIG. 7

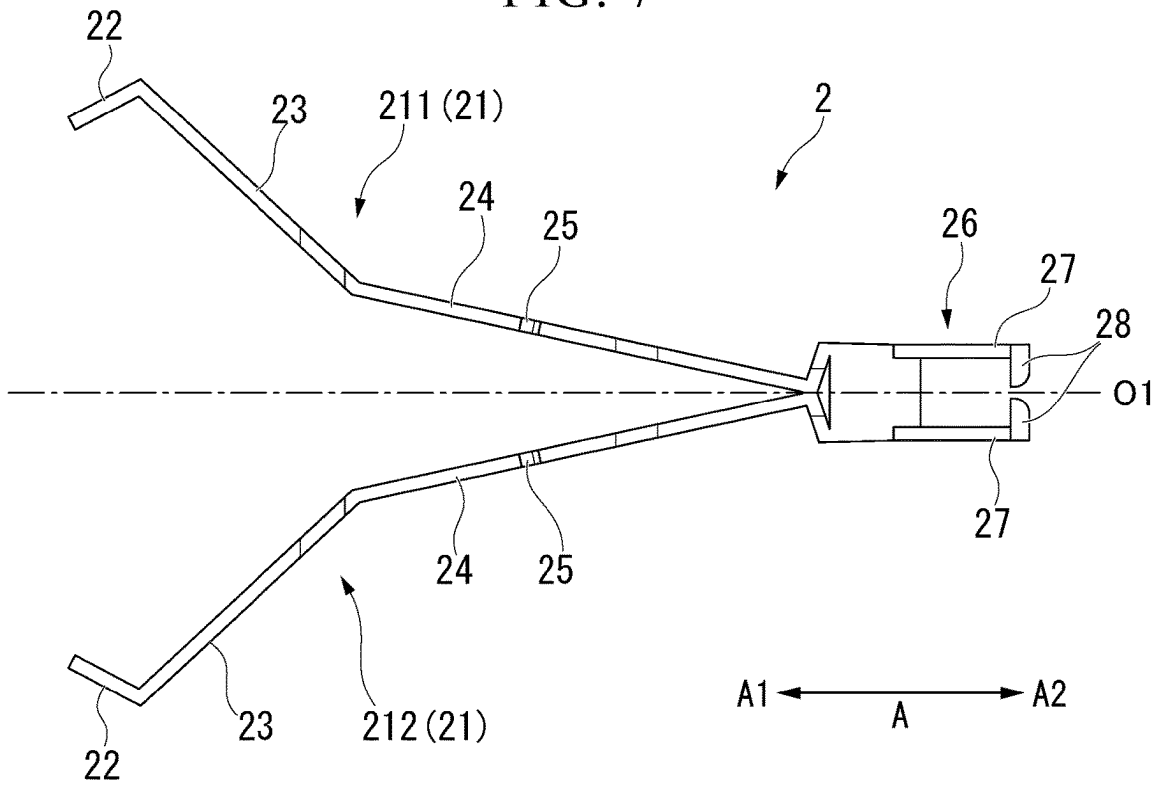
22
23
211 (21)
2
24
25
26
27
28
O1
27
24
25
23
212 (21)
22
A1
A
A2

FIG. 8

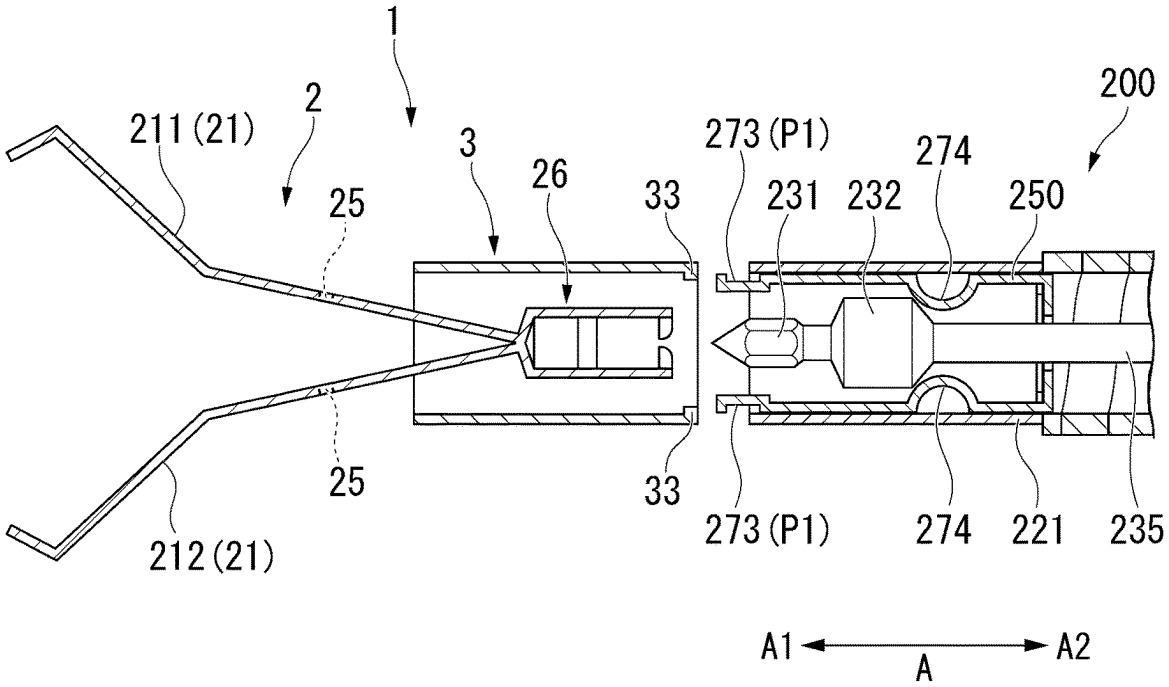
1
2
211 (21)
3
26
25
33
273 (P1)
231
232
274
250
200
25
33
273 (P1)
274
221
235
212 (21)
A1
A
A2

FIG. 9

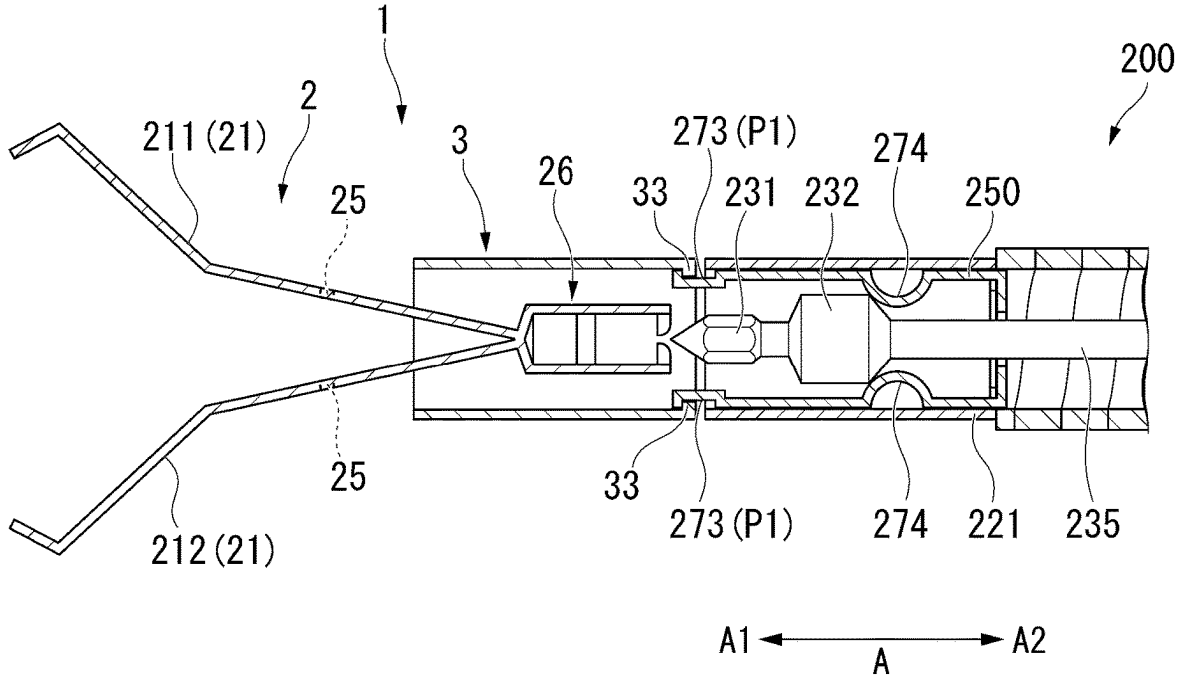
1
200
2
211 (21)
3
26
273 (P1)
274
25
33
231
232
250
25
33
273 (P1)
274
221
235
212 (21)
A1
A2
A

FIG. 10

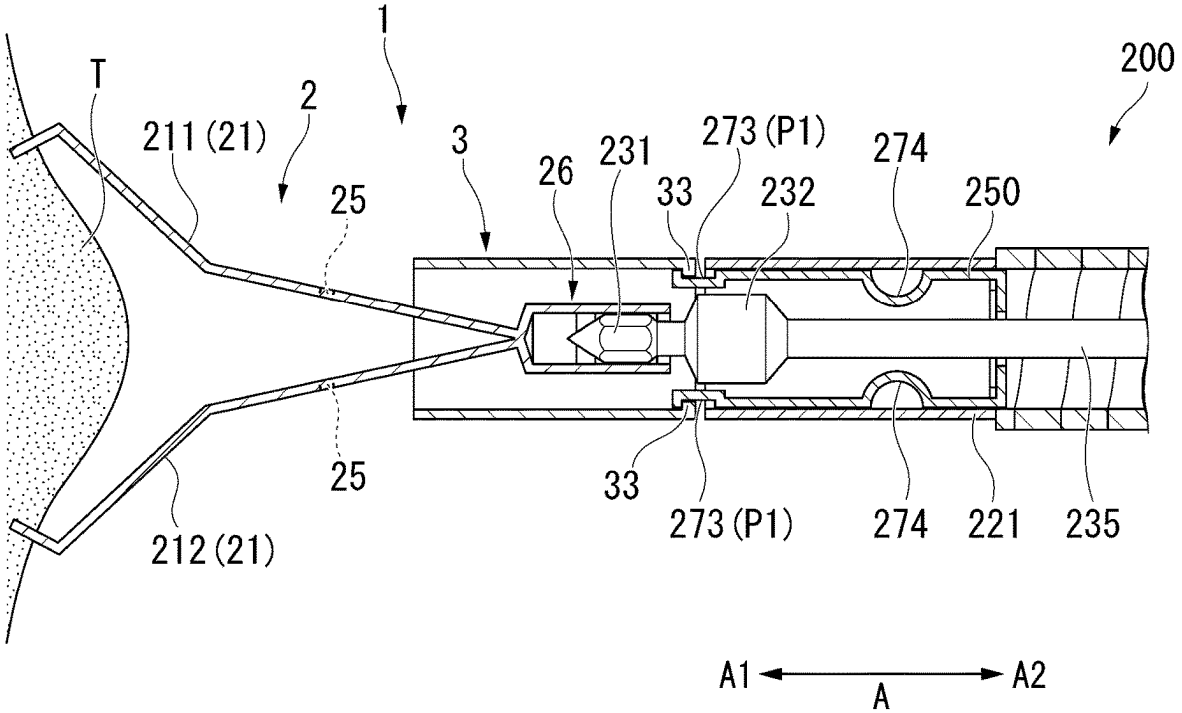
1
200
T
2
211 (21)
3
26
231
273 (P1)
274
25
33
232
250
25
33
273 (P1)
274
221
235
212 (21)
A1
A2
A

FIG. 11

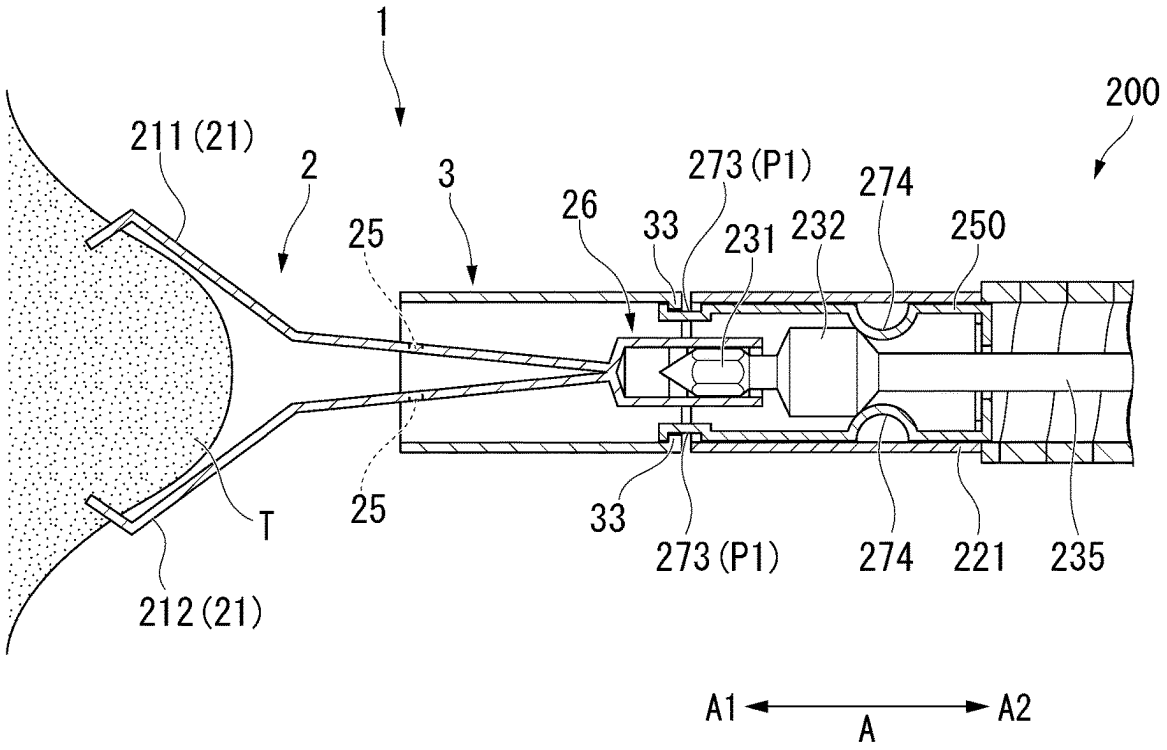
1
200
211 (21)
2
3
273 (P1)
274
26
33
231
232
250
25
T
25
33
273 (P1)
274
221
235
212 (21)
A1
A2
A

FIG. 12

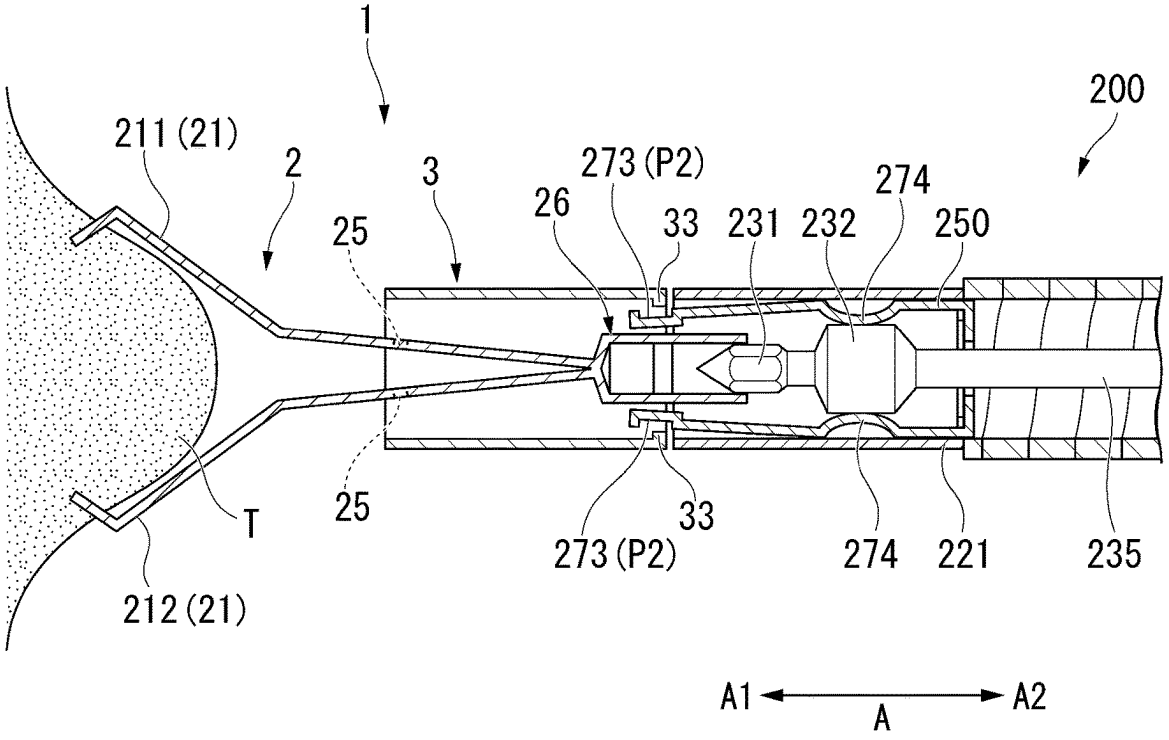
1
200
211 (21)
2
3
273 (P2)
274
26
33
231
232
250
25
T
25
33
273 (P2)
274
221
235
212 (21)
A1
A2
A

FIG. 13

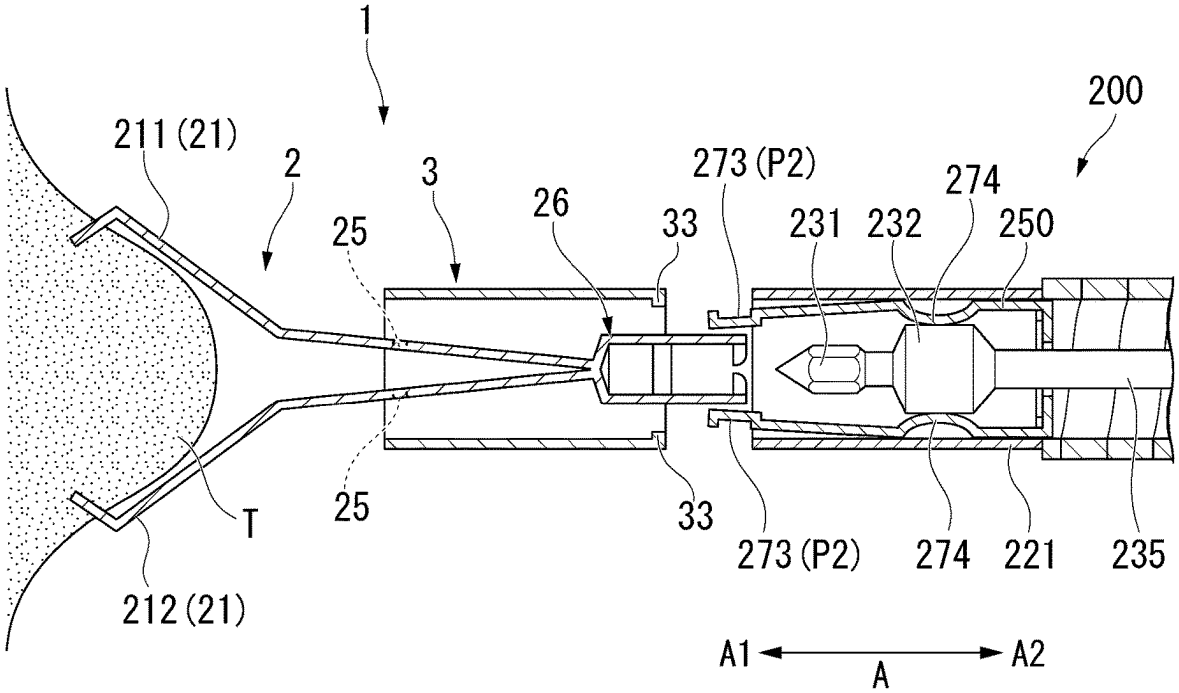
1
200
211 (21)
2
3
26
273 (P2)
274
25
33
231
232
250
T
25
33
273 (P2)
274
221
235
212 (21)
A1
A
A2

FIG. 14

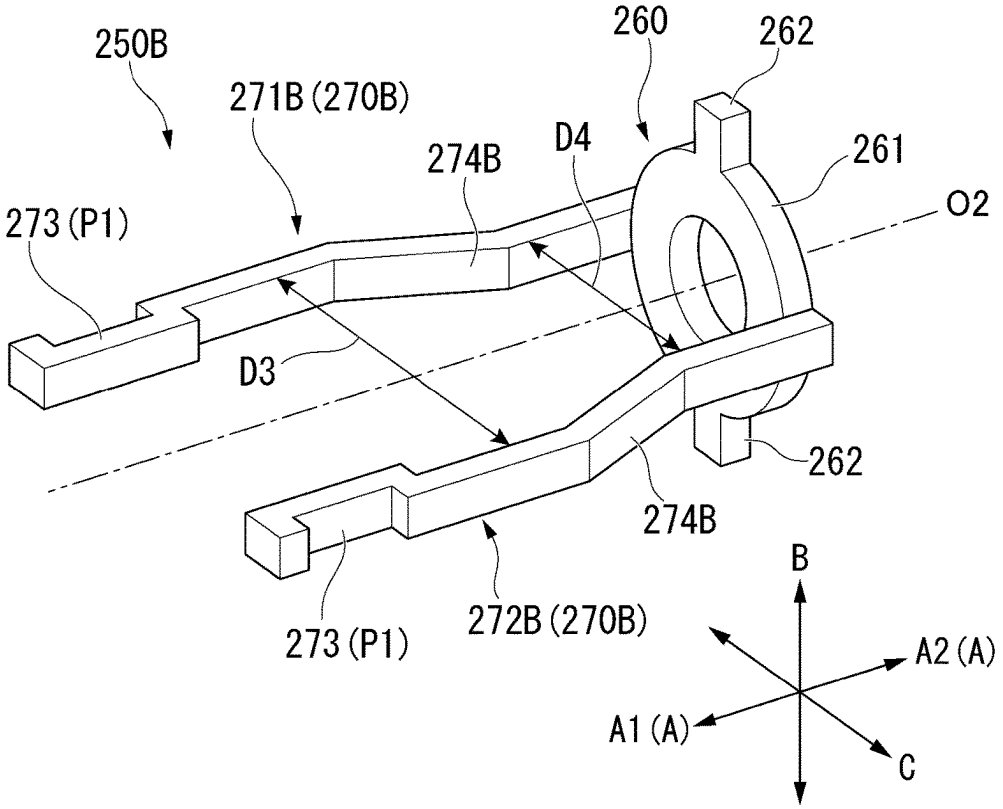
250B
260
262
271B (270B)
D4
261
274B
O2
273 (P1)
D3
262
274B
273 (P1)
272B (270B)
B
A2 (A)
A1 (A)
C

FIG. 15

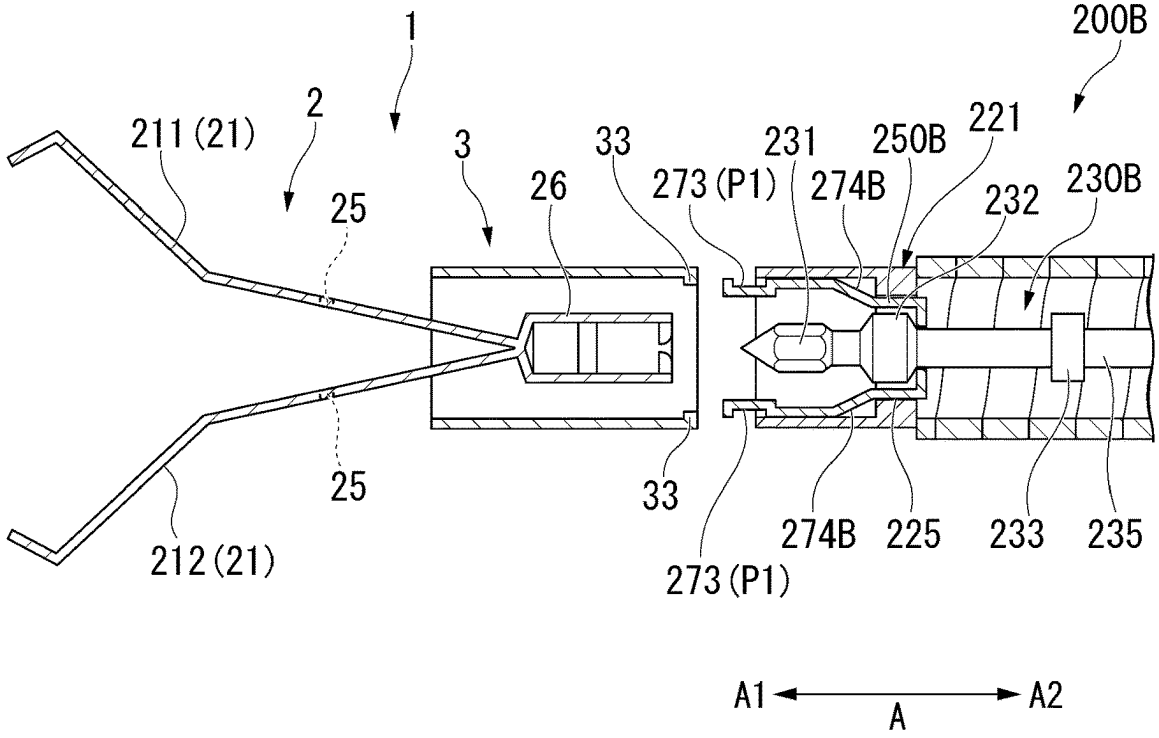
1
200B
2
211 (21)
3
33
231
250B
221
26
273 (P1)
274B
232
230B
25
25
33
274B
225
233
235
212 (21)
273 (P1)
A1
A
A2

FIG. 16

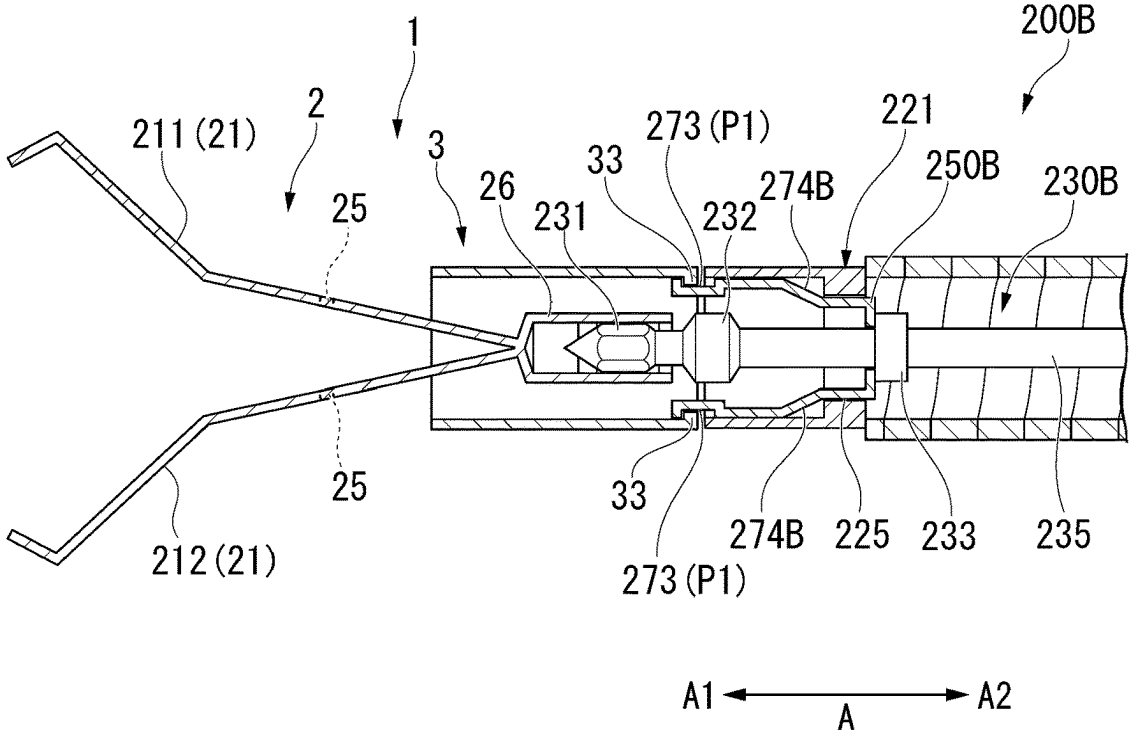
1
200B
2
211 (21)
273 (P1)
221
3
33
250B
26
274B
230B
231
232
25
25
33
274B
225
233
235
212 (21)
273 (P1)
A1
A
A2

FIG. 17

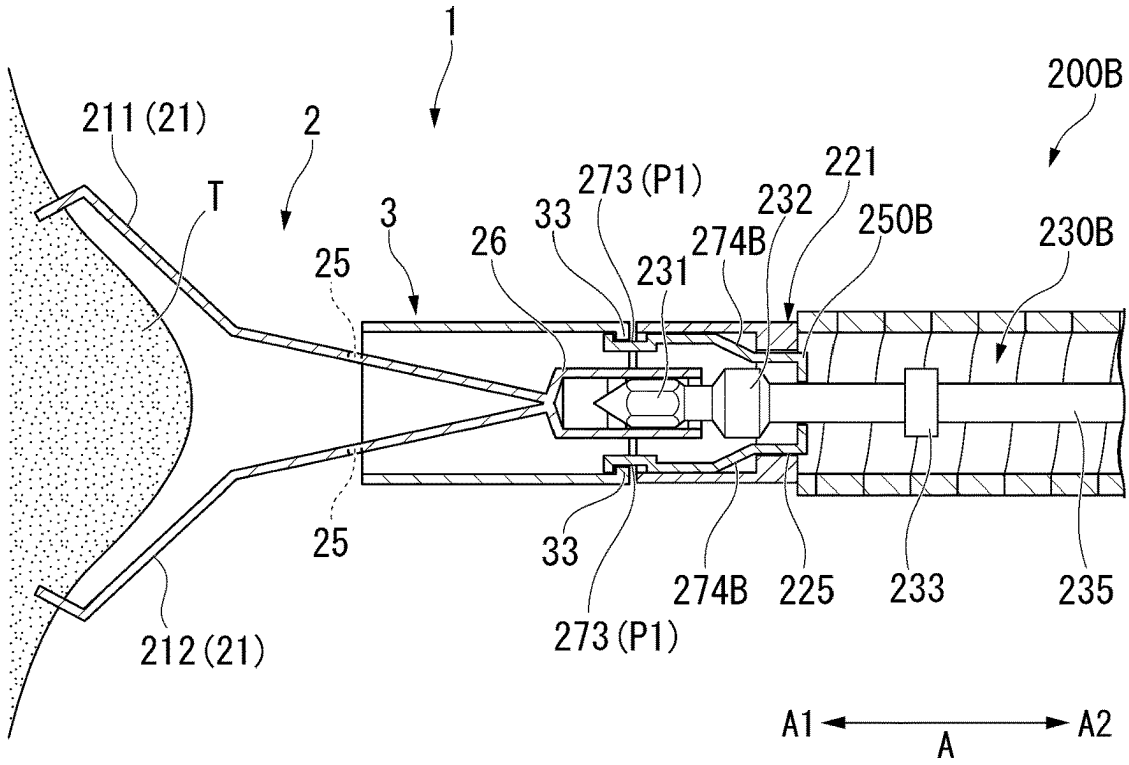
1
200B
211 (21)
2
T
3
25
26
33
273 (P1)
231
274B
232
221
250B
230B
25
33
274B
225
233
235
212 (21)
273 (P1)
A1
A2
A

FIG. 18

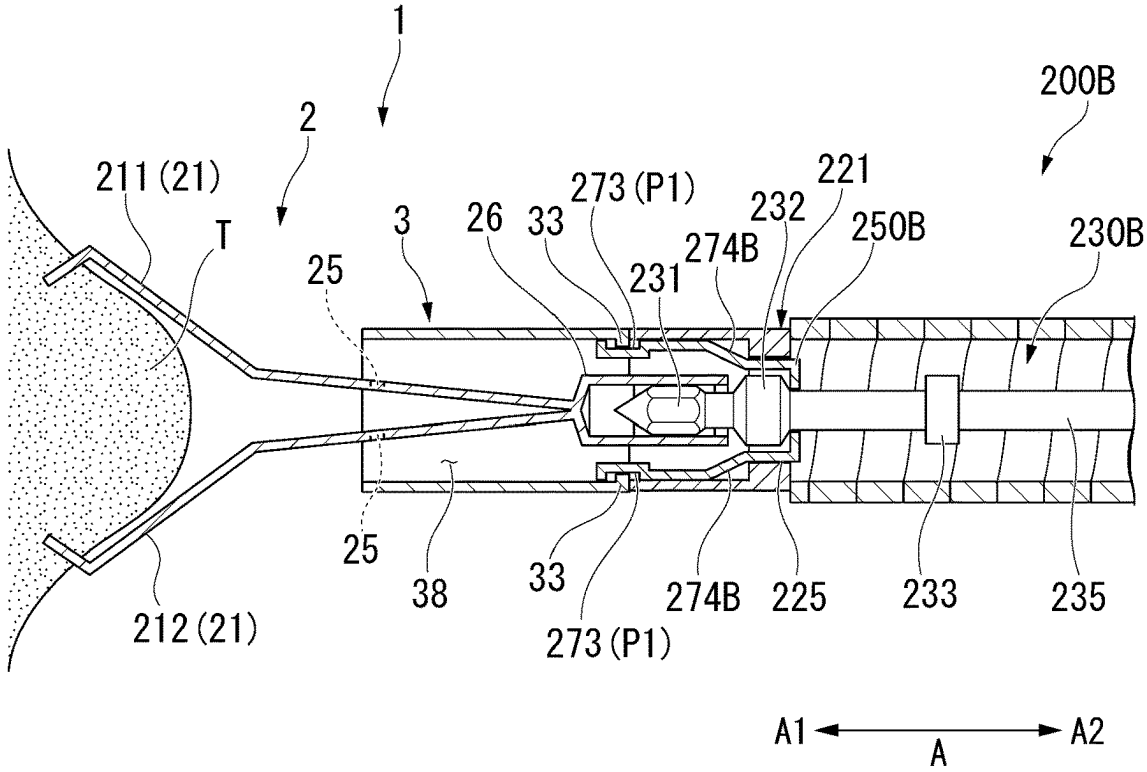
1
200B
2
211 (21)
T
3
26
33
273 (P1)
231
274B
232
221
250B
230B
25
25
38
33
274B
225
233
235
212 (21)
273 (P1)
A1
A2
A

FIG. 19

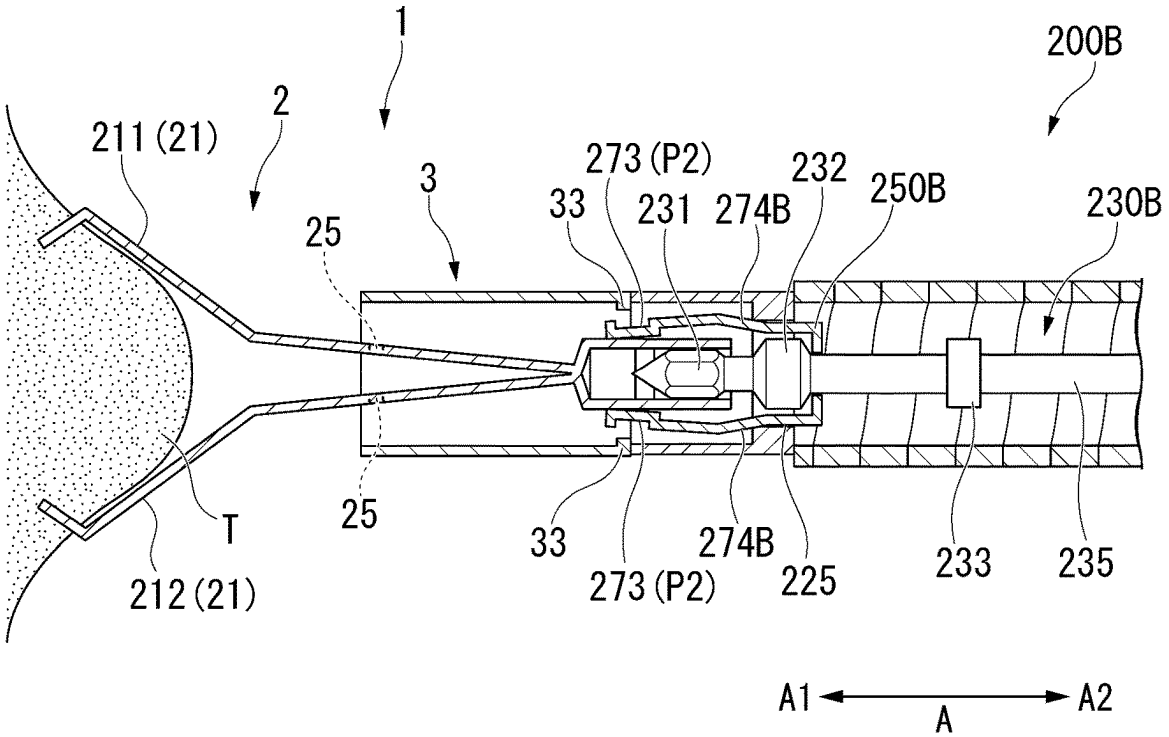
1
200B
2
211 (21)
3
273 (P2)
232
250B
33
231
274B
230B
25
T
25
33
274B
212 (21)
273 (P2)
225
233
235
A1
A2
A

FIG. 20

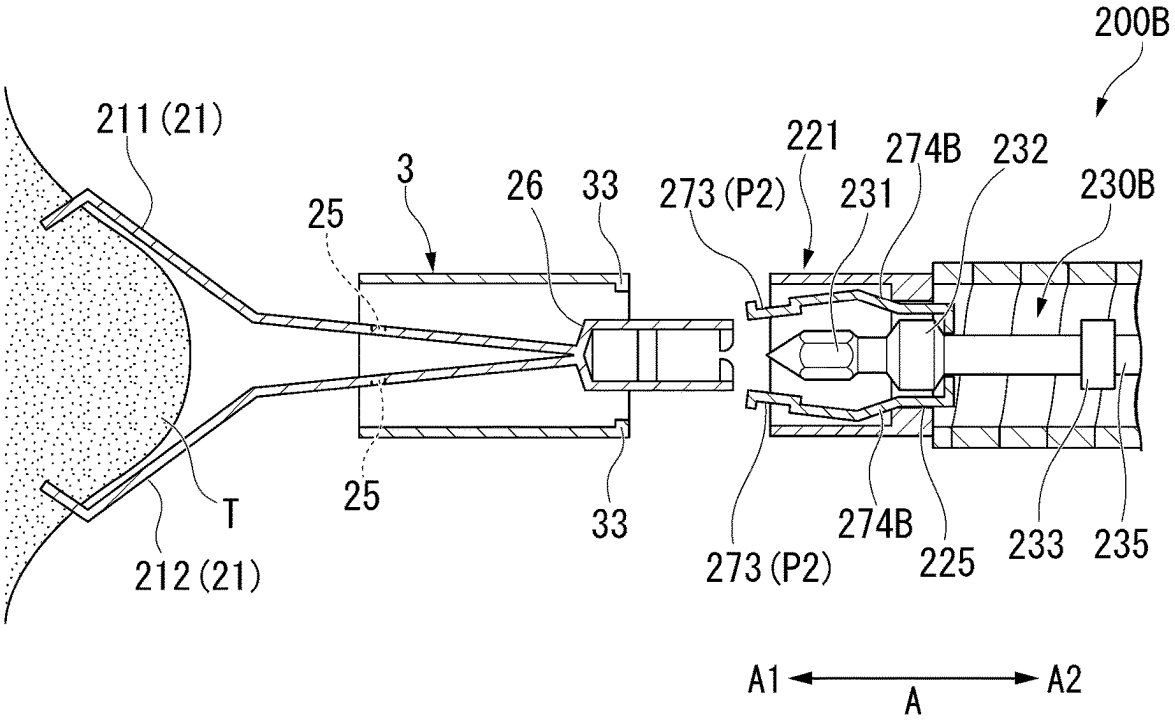
200B
211 (21)
221
274B
232
3
26
33
273 (P2)
231
230B
25
T
25
33
274B
212 (21)
273 (P2)
225
233
235
A1
A2
A

FIG. 21

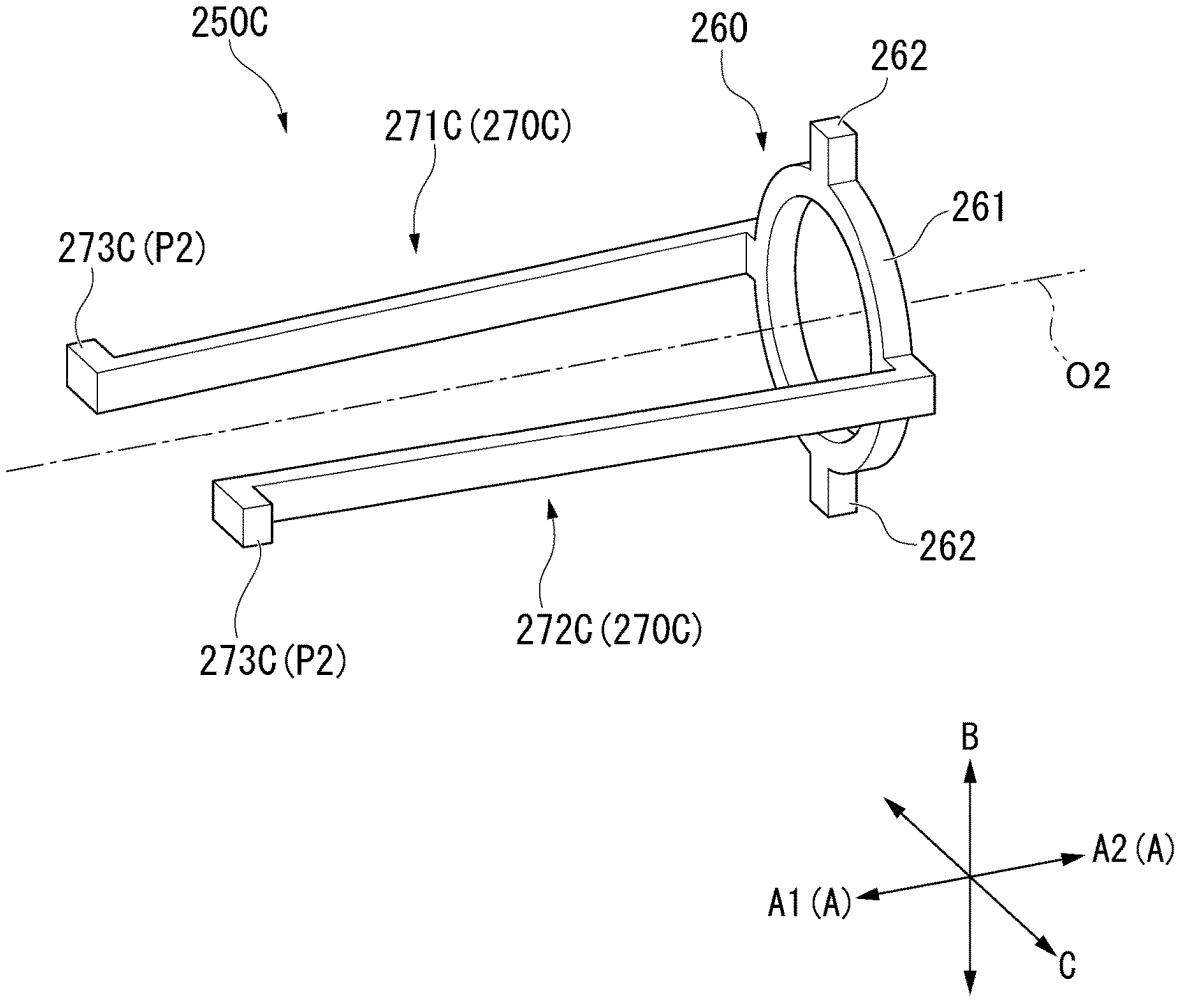
250C
260
262
271C (270C)
261
273C (P2)
O2
262
272C (270C)
273C (P2)
B
A2 (A)
A1 (A)
C

FIG. 22

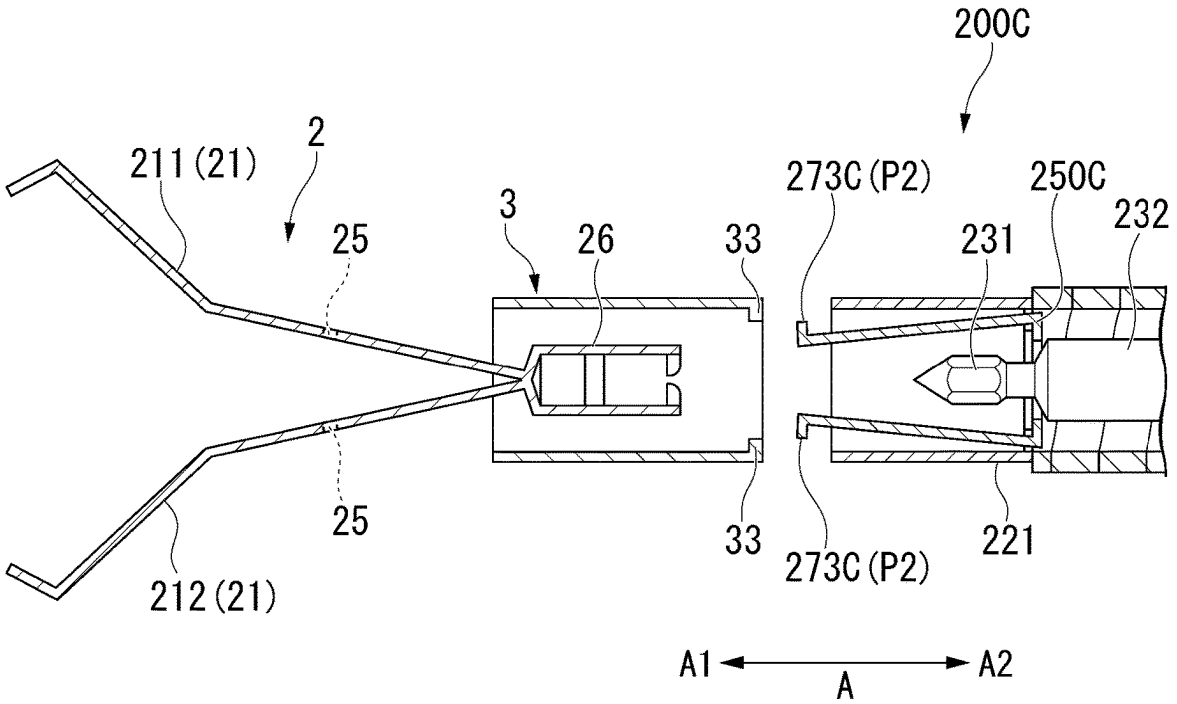
200C
2
211 (21)
25
3
26
33
273C (P2)
250C
231
232
25
33
273C (P2)
221
212 (21)
A1
A2
A

FIG. 23

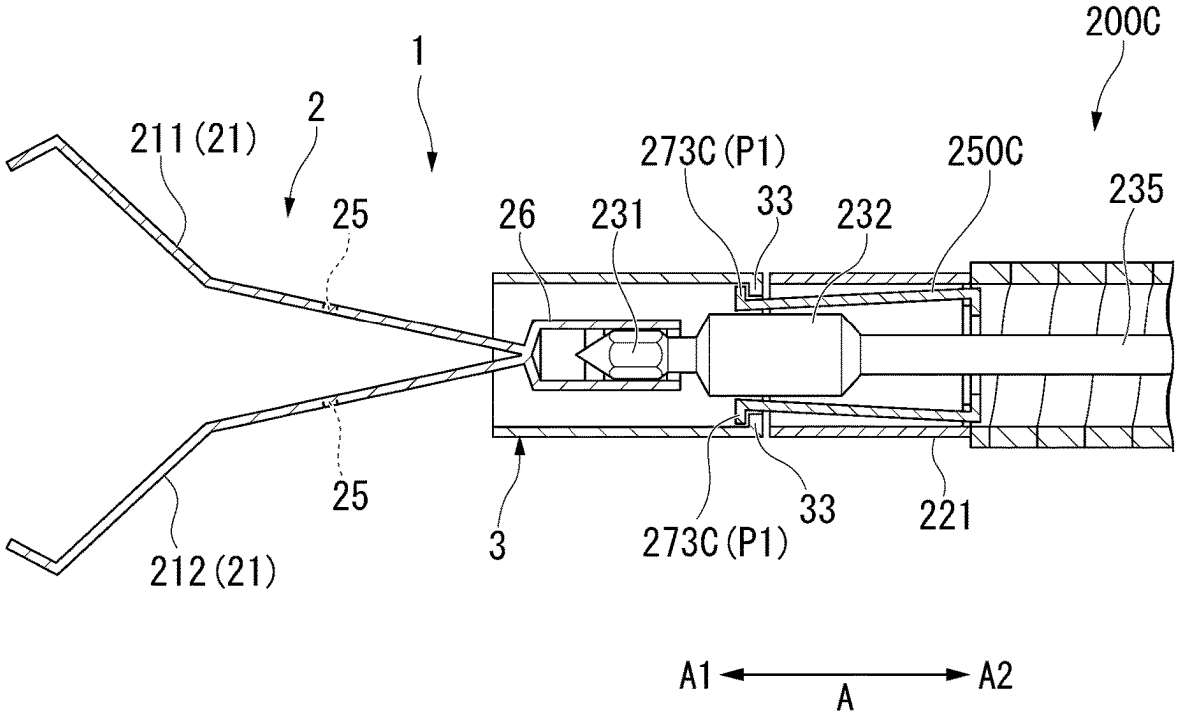
200C
1
2
211 (21)
273C (P1)
250C
25
26
231
33
232
235
25
3
273C (P1)
33
221
212 (21)
A1
A2
A

FIG. 24

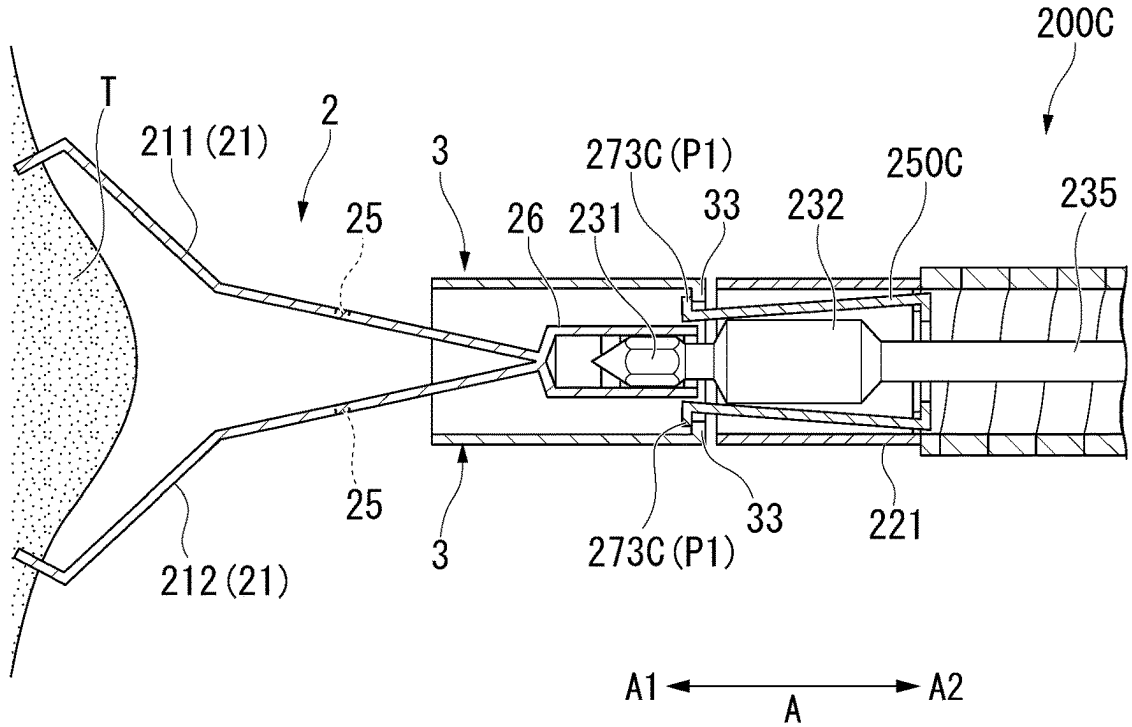
200C
T
211 (21)
2
3
273C (P1)
250C
235
25
26
231
33
232
25
3
273C (P1)
33
221
212 (21)
A1
A
A2

FIG. 25

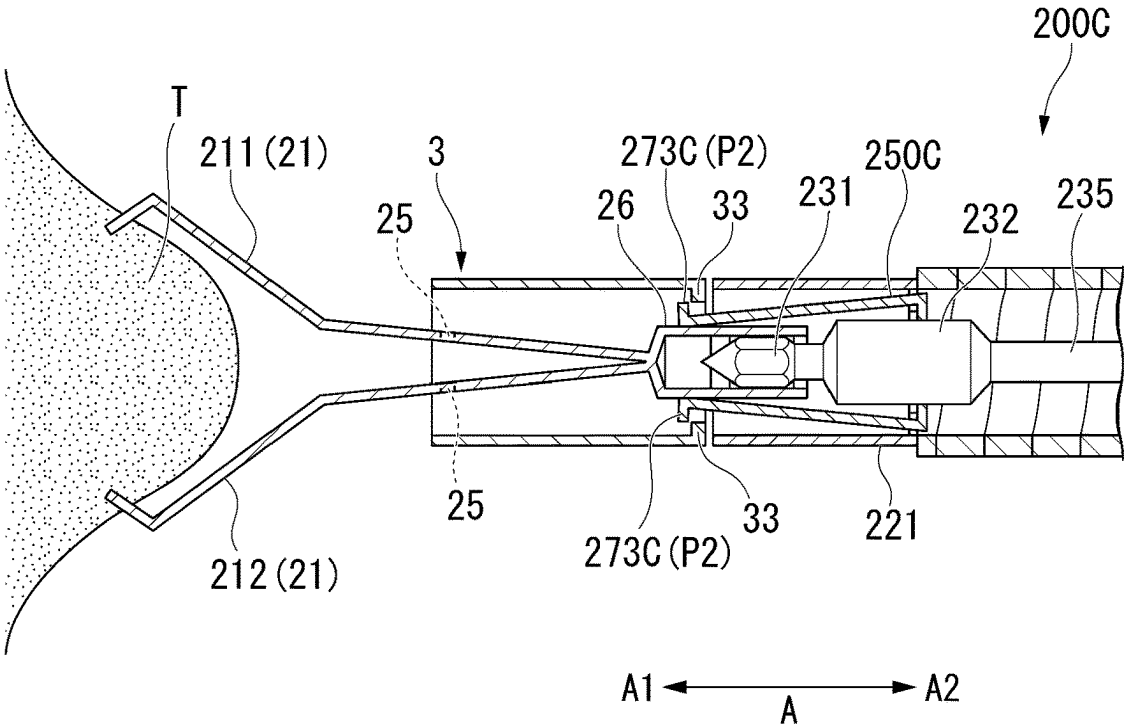
200C
T
211 (21)
3
273C (P2)
250C
25
26
33
231
232
235
25
33
221
273C (P2)
212 (21)
A1
A
A2

FIG. 26

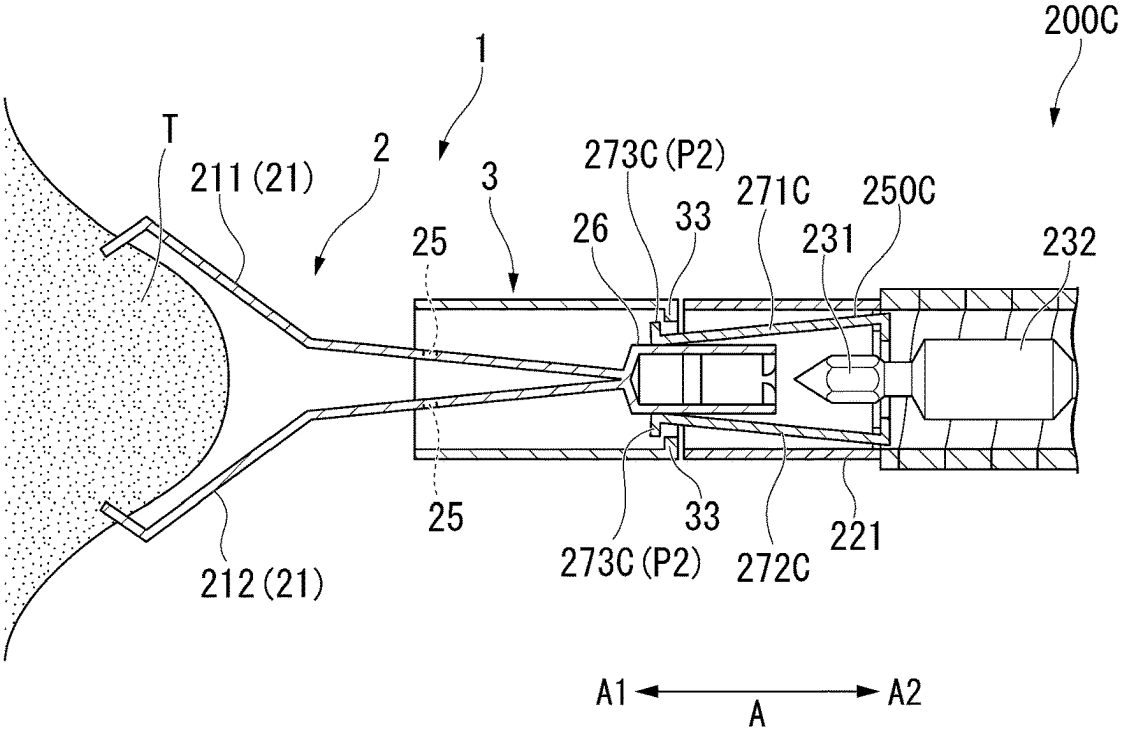
200C
1
T
211 (21)
2
3
273C (P2)
271C
250C
25
26
33
231
232
25
33
221
273C (P2)
272C
212 (21)
A1
A2
A

FIG. 27

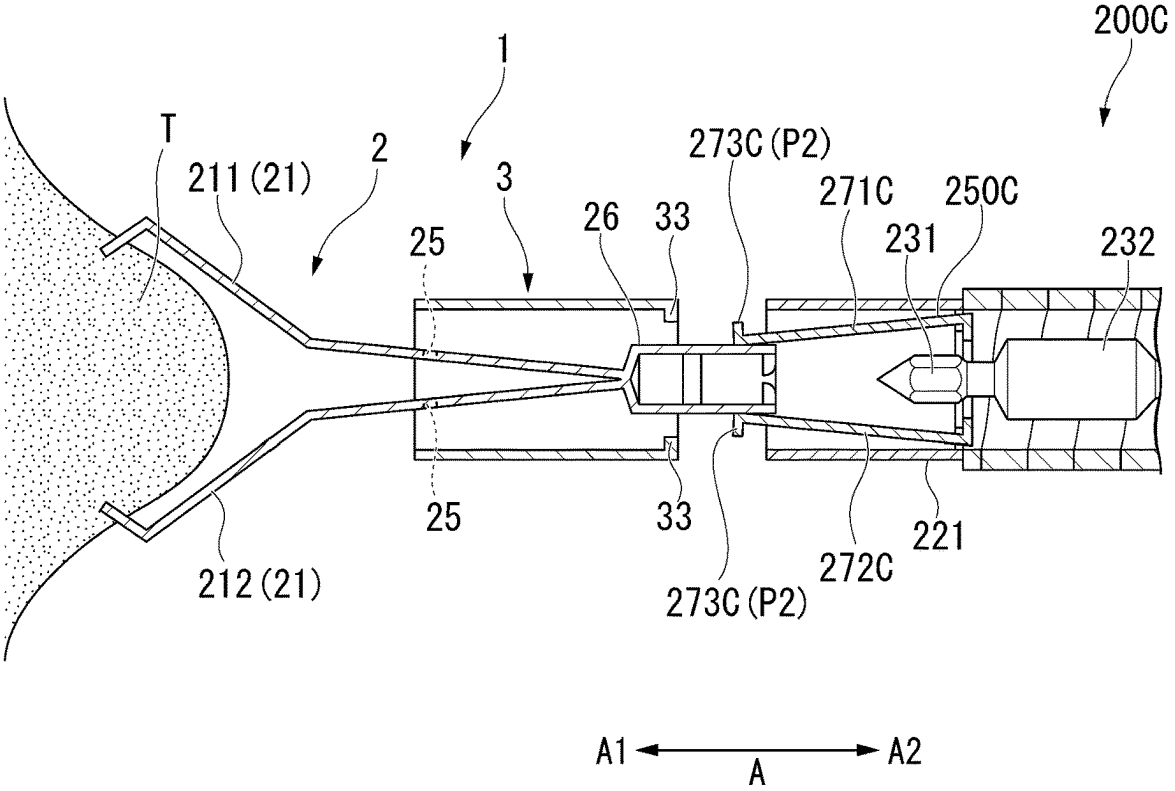
200C
1
T
211 (21)
2
3
273C (P2)
271C
250C
25
26
33
231
232
25
33
221
272C
212 (21)
273C (P2)
A1
A2
A

CLIP DELIVERY DEVICE, AND RELEASING METHOD OF CLIP UNIT

CROSS-REFERENCE TO RELATED APPLICATIONS

The present disclosure claims priority on U.S. Provisional Application No. 63/315,433, filed Mar. 1, 2022. The disclosure of the prior applications is hereby incorporated by reference herein in its entirety.

TECHNICAL FIELD

The present disclosure relates to a clip delivery device, and a method of releasing a clip unit.

BACKGROUND

In an endoscopic treatment, a clip unit capable of ligating the dissection portion or the like after the treatment to realize the hemostasis or the like is used. The clip unit includes a clip configured to clamp the dissection portion or the like and a pressing tube configured to accommodate the clip and lock the clip in a closed state. The clip unit is introduced to the treatment portion by an applicator that is insertable into a channel of the endoscope.

The clip system disclosed in Japanese Unexamined Patent Application, First Publication No. 2021/035501 includes a clip assembly and an applicator having a mechanism into which the clip assembly is loadable and from which the clip assembly is detachable. The clip system is configured to be capable of reloading (reloadable) a new clip assembly to the applicator after indwelling the clip assembly in the living body.

SUMMARY

A clip delivery device comprises a sheath, a wire inserted into the sheath and a clip detachably connected to the wire and including a plurality of arms. The plurality of arms is movable between an open position and a closed position. The clip delivery device further comprises a tube containing at least part of the clip and having a convex portion on an inner surface of the tube and a connector provided in the sheath and having a hook. The hook detachably connected with the convex portion of the tube. The tube is adjacent the sheath along a longitudinal axis. The hook is movable between a first position and a second position. In the first position, the hook engages the convex portion of the tube and is located at a first radial distance from a central axis of the sheath. In the second position, the hook is disengaged from the convex portion of the tube and is located at a second radial distance from the central axis of the sheath. The first radial distance is greater than the second radial distance. When the wire is moved proximal to the sheath, the hook is moved from the first position to the second position.

A clip delivery device comprises a sheath, a wire inserted into the sheath and a clip detachably connected to the wire and including a plurality of arms. The plurality of arms is movable between an open position and a closed position. The clip delivery device further comprises a tube containing at least part of the clip and having a convex portion on an inner surface of the tube and a connector provided in the sheath and having a distal-end portion and a deformation portion. The distal-end portion is detachably connected to the convex portion on an inner surface of the tube. The deformation portion is elastically deformable. When the wire is moved proximal to the sheath, the deformation portion is elastically deformed to decrease a diameter of the distal-end portion of the connector.

DESCRIPTION OF DRAWINGS

FIG. **1** is a view showing a clip introduction device of a clip delivery device according to a first embodiment.

FIG. **2** is a perspective view showing a distal-end tube portion and a connection member of the clip introduction device.

FIG. **3** is a perspective view showing the connection member.

FIG. **4** is a perspective view showing a clip unit that is loaded in the clip introduction device.

FIG. **5** is a perspective view showing a clip that is connected with an operation wire of the clip introduction device.

FIG. **6** is a cross-sectional view showing the clip unit that is loaded in the clip introduction device.

FIG. **7** is a planar view showing the clip of the clip unit.

FIG. **8** is a cross-sectional view showing the clip introduction device before loading the clip unit.

FIG. **9** is a cross-sectional view showing the clip introduction device that is connected with a pressing tube of the clip unit.

FIG. **10** is a cross-sectional view showing the clip introduction device into which the clip unit is loaded.

FIG. **11** is a cross-sectional view showing the clip unit where the clip is locked and the clip introduction device.

FIG. **12** is a cross-sectional view showing the clip introduction device where the arrowhead hook is further pulled.

FIG. **13** is a cross-sectional view showing the clip introduction device from which the clip unit is separated.

FIG. **14** is a perspective view showing a connection member in a clip introduction device of a clip delivery device according to a second embodiment.

FIG. **15** is a cross-sectional view showing the clip introduction device before loading the clip unit.

FIG. **16** is a cross-sectional view showing the clip introduction device that is connected to a pressing tube of the clip unit.

FIG. **17** is a cross-sectional view showing the clip introduction device in which the clip unit is loaded.

FIG. **18** is a cross-sectional view showing the clip unit where the clip is locked and the clip introduction device.

FIG. **19** is a cross-sectional view showing the clip introduction device where the arrowhead hook is further pulled.

FIG. **20** is a cross-sectional view showing the clip introduction device from which the clip unit is separated.

FIG. **21** is a perspective view showing a connection member in a clip introduction device of a clip delivery device according to a third embodiment.

FIG. **22** is a cross-sectional view showing the clip introduction device before loading the clip unit.

FIG. **23** is a cross-sectional view showing the clip introduction device that is connected to a pressing tube of the clip unit.

FIG. **24** is a cross-sectional view showing the clip introduction device in which the clip unit is loaded.

FIG. **25** is a cross-sectional view showing the clip unit where the clip is locked and the clip introduction device.

FIG. **26** is a cross-sectional view showing the clip introduction device where the arrowhead hook is further pulled.

FIG. **27** is a cross-sectional view showing the clip introduction device from which the clip unit is separated.

DETAILED DESCRIPTION

First Embodiment

A clip delivery device **300** according to a first embodiment of the present disclosure will be described with reference from FIG. **1** to FIG. **13**.

[Clip Delivery Device **300**]

The clip delivery device (clip system, clip device) **300** includes a clip introduction device (applicator) **200** and a clip unit **1**. The clip unit **1** is loaded into the clip introduction device **200**.

[Clip Introduction Device **200**]

FIG. **1** is a view showing the clip introduction device **200**.

The clip introduction device (applicator) **200** includes a sheath **220**, an operation wire **230**, an operation portion **240**, and a connection member (connector) **250**.

In the following description, the clip unit **1** side in the longitudinal direction A of the clip delivery device **300** is referred to as a tip-end side (distal-end side) A**1** of the clip delivery device **300**, and the operation portion **240** side of the clip introduction device **200** is referred to as a base-end side (proximal-end side) A**2** of the clip delivery device **300**.

The clip introduction device **200** is, for example, inserted through the treatment device insertion channel of the endoscope to be used in combination with the endoscope. Accordingly, the sheath **220** is formed to be enough longer than the length of the treatment device insertion channel of the endoscope. The sheath **220** has the flexibility and is configured to bend following the bending of the insertion portion of the endoscope.

The sheath **220** includes a distal-end tube portion **221**, a distal-end coil **222**, and a hand-side coil **224**, and the entire of the sheath **220** is formed in an elongated tubular shape. The distal-end coil **222** is disposed at the distal-end portion side of the sheath **220**. The distal-end tube portion **221** is disposed in the distal-end portion of the distal-end coil **222**.

As shown in FIG. **1**, the operation wire (power transmission member) **230** includes an arrowhead hook (connection portion) connected to the clip unit **1**, an enlarged-diameter portion **232**, and a wire **235** to operate the arrowhead hook **231**.

The arrowhead hook **231** is provided at the distal end of the operation wire (power transmission member) **230**, and formed in the approximately conical shape. The arrowhead hook **231** is formed of metal material such as the stainless steel or the like, for example.

The enlarged-diameter portion **232** is provided at the proximal-end side A**2** of the arrowhead hook **231**. An outer diameter of the enlarged-diameter portion **232** is larger than an outer diameter of the wire **235**. The enlarged-diameter portion **232** is formed of metal material such as the stainless steel or the like, for example.

The wire **235** is inserted to be freely advanceable and retractable with respect to the sheath **220**. The distal-end portion of the wire **235** is fixed to the proximal end of the enlarged-diameter portion **232** by welding or the like, for example.

As shown in FIG. **1**, the operation portion **240** includes an operation portion main body **241**, a slider **242**, and a thumb ring **248**. The operation portion main body **241** is injection-molded, for example, from a resin material. The operation portion main body **241** includes a slit portion **241***a*, and a rotation grip **241***b* at the distal-end side. The slit portion **241***a* supports the slider **242** to be advanceable and retractable.

The slider **242** is attached to the operation portion main body **241** to be advanceable and retractable in the longitudinal direction, and to which the proximal end of the wire **235** is attached. By the slider **242** advancing and retracting along the operation portion main body **241**, the wire **235** advances and retracts with respect to the sheath **220** and the arrowhead hook **231** advances and retracts.

The thumb ring **248** is attached to the proximal end of the operation portion main body **241** to be rotatable around the longitudinal direction of the operation portion main body **241**.

[Connection Member **250**]

FIG. **2** is a perspective view showing the distal-end tube portion **221** and the connection member **250**.

The connection member **250** is a member for detachably connecting the clip unit **1** and the clip introduction device **200**, and the connection member **250** is provided in the internal space of the distal-end tube portion **221**.

FIG. **3** is a perspective view showing the connection member **250**.

The connection member **250** includes a support portion (support base) **260** and a connection arm **270**. In the present embodiment, the connection arm **270** includes a first connection arm **271** and a second connection arm **272**. The connection arm **270** may include three or more connection arms.

The support portion **260** is a member that is supported by the distal-end tube portion **221**. The support portion **260** includes an annular portion **261** and an engagement convex portion **262**.

As shown in FIG. **2**, the annular portion **261** is formed in an annular shape such that the wire **235** can pass through the internal space thereof. The outer diameter D**1** of the enlarged-diameter portion **232** is larger than an inner diameter of the annular portion **261**, and it is impossible for the enlarged-diameter portion **232** to pass through the internal space of the annular portion **261**.

The engagement convex portion **262** is a convex portion protruding outwardly in the radial direction R from the annular portion **261**. The engagement convex portion **262** is provided at both sides in the up-down direction B orthogonal to the longitudinal direction A.

The distal-end tube portion **221** has a proximal-end opening portion **225** at the proximal-end side A**2**. The proximal-end opening portion **225**, for example, is a convex portion protruding toward the inside in the radial direction R from the inner circumferential surface of the distal-end tube portion **221**. The proximal-end opening portion **225** as the example shown in FIG. **2** is formed across the whole circumference in the inner circumferential surface of the distal-end tube portion **221**. The engagement convex portion **262** is engaged with the proximal-end opening portion **252** from the proximal-end side A**2** so as to be impossible to move to the distal-end side A**1** beyond the proximal-end opening portion **225**.

The proximal-end portion of the connection arm **270** (first connection arm **271** and second connection arm **272**) is attached to the support portion **260**. More specifically, the proximal-end portion of the connection arm **270** is attached to the support portion **260** at both sides in the radial direction R. The connection arm **270** extends toward the distal-end side A**1** from the support portion **260** passing through a slit **226** formed in the proximal-end opening portion **225**.

The connection arm **270** is arranged at both sides in the left-right direction C orthogonal to the longitudinal direction A and the up-down direction B. The first connection arm **271** and the second connection arm **272** are formed in a shape symmetrical with respect to the central axis O2 in the longitudinal direction A of the connection member **250**.

The connection arm (first connection arm **271** and second connection arm **272**) includes a hooking portion (hook) **273** and a deformation portion **274**.

The hooking portion (hook) **273** is a hook whose outside in the radial direction is formed in a concave portion, and is provided at the distal end of the connection arm **270**. As shown in FIG. **2**, the hooking portion **273** protrudes in the distal-end side A**1** from the distal-end tube portion **221**. The hooking portion **273** is engageable with the decreased-diameter portion **33** of the pressing tube **3** described below.

The deformation portion **274** is an intermediate portion of the connection arm **270**, and is a portion bent in a C shape toward the inside in the radial direction R. The deformation portion **274** may be a portion bent in a semicircular or semioval toward the inside in the radial direction R. A distance D**2** between the deformation portions **274** arranged at two sides to sandwich the central axis O**2** is smaller than the outer diameter D**1** of the enlarged-diameter portion **232** of the operation wire **230** (see FIG. **6**).

The connection arm **270** (first connection arm **271** and second connection arm **272**) is configured such that at least the deformation portion **274** has the elasticity and is movable at least in the left-right direction C. In the present embodiment, in the state without receiving any external force, the connection arm **270** is arranged at a position (hereinafter referred to as an initial position) where the first connection arm **271** and the second connection arm **272** are substantially parallel to each other.

[Clip Unit **1**]

FIG. **4** is a perspective view showing the clip unit **1** that is loaded in the clip introduction device **200**. FIG. **5** is a perspective view showing the clip **2** connected to the operation wire **230**. FIG. **6** is a cross-sectional view showing the clip unit **1** that is loaded in the clip introduction device **200**. The clip unit **1** includes the clip **2** and the pressing tube **3**. The proximal-end side A**2** of the clip **2** is inserted into the internal space **38** of the pressing tube **3**.

FIG. **7** is a planar view showing the clip **2**.

The clip **2** includes a pair of arms **21** that can be opened and closed toward the distal-end side A**1**, and a proximal-end portion **26** provided on the proximal-end side A**2** of the pair of arms **21**. As shown in FIG. **5** and FIG. **6**, the clip **2** is detachably connected to an arrowhead hook **231** of the operation wire **230** being inserted through the sheath **220**.

The pair of arms **21** has a first arm **211** and a second arm **212**. The first arm **211** and the second arm **212** are arranged symmetrically with respect to a central axis O**1** in the longitudinal direction A of the clip unit **1**. It is noted that the clip **2** may have three or more arms.

The first arm **211** and the second arm **212** have a claw **22**, a grasping portion **23**, a sliding portion **24**, and an engaging portion **25** arranged from the distal-end side A**1** toward the proximal-end side A**2**.

The claw **22** is formed by bending the distal ends of the first arm **211** and the second arm **212** inwardly. The grasping portion **23** is formed in a substantially flat plate shape and is a portion that grasps the tissue. The sliding portion **24** is a portion that is elastically deformed when the pair of arms **21** is retracted into the pressing tube **3**.

The engaging portion **25** is a portion that is engageable with the inner circumferential surface **32** of the pressing tube **3**. The engaging portion **25** is a convex portion that protrudes from the sliding portion **24**. Specifically, the engaging portion **25** protrudes to both sides in the up-down direction perpendicular to the longitudinal direction A and the open-close direction P of the pair of arms **21**.

The proximal-end portion **26** is supported by the first arm **211** and the second arm **212**. The first arm **211** and the second arm **212** supported by the proximal-end portion **26** is provided to be freely openable and closable toward the distal-end side A**1**. The proximal-end portion **26** is biased such that the pair of arms **21** are in the open state. Accordingly, the pair of arms **21** of the clip **2** have a self-expanding force in the open-close direction.

The proximal-end portion **26** is detachably connected with the arrowhead hook **231** inserting through the sheath **220**. The proximal-end portion **26** includes a pair of connection arms **27** to be freely openable and closable with respect to the proximal-end side A**2**. The pair of connection arms **27** clamp the arrowhead hook **231**. The pair of connection arms **27** include a pair of stoppers **28** protruding toward each other at the proximal end thereof.

The arrowhead hook **231** can pass through the gap between the pair of stoppers **28** by pressing the pair of stoppers **28** to expand in a direction separating from the central axis O**1**. The arrowhead hook **231** passes through the gap between the pair of stoppers **28** toward the distal-end side A**1** so as to be connected with the connection arm **27**. The arrowhead hook **231** passes through the gap between the pair of stoppers **28** toward the proximal-end side A**1** so as to be separated from the connection arm **27**.

The pressing tube (tubular member, tube) **3** is a circular tubular member capable of accommodating at least part of the clip **2**. The pressing tube **3** has the internal space **38** where the clip **2** advances and retracts in the longitudinal direction A. The pressing tube **3** can fix the clip **2** in the closed state that is retracted into the internal space **38** thereof. The pressing tube **3** includes a pressing tube main body **31** formed in a cylindrical shape and a decreased-diameter portion **33**.

The pressing tube main body **31** is formed by performing the injection molding using a material more flexible than that of the clip **2**, for example, the thermoplastic resin such as PPA (polyphthalamide), PA (polyamide), PEEK (polyetheretherketone), LCP (liquid crystal polymer), and the like having appropriate elasticity. It is noted that the pressing tube main body **31** may be made of the metal instead of the thermoplastic resin.

The decreased-diameter portion (narrow portion, engaged portion) **33** is provided at the proximal-end side A**1** of the pressing tube main body **31** to form a proximal-end opening **34**. The inner diameter of the proximal-end opening **34** is smaller than the inner diameter of the pressing tube main body **31**. The decreased-diameter portion **33**, for example, is a convex portion protruding to the inside in the radial direction R and arranged along the circumferential direction in the inner circumferential surface **32**. It is noted that the decreased-diameter portion **33** does not have to be formed across the whole circumference in the circumferential direction.

[Operations and Effect of Clip Delivery Device **300**]

Next, the operations and effect of the clip delivery device **300** will be described by referring from FIG. **8** to FIG. **13**.

FIG. **8** is a cross-sectional view showing the clip introduction device **200** before loading the clip unit **1**. Before loading the clip unit **1**, the connection arm **270** of the connection member **250** is disposed at the initial position. The enlarged-diameter portion **232** of the operation wire **230**

is disposed at the distal-end side A1 with respect to the deformation portion **274** of the connection member **250**.

FIG. **9** is a cross-sectional view showing the clip introduction device **200** that is connected to the pressing tube **3**. The user pushes the clip unit **1** toward the clip introduction device **200** from the distal-end side A1 so as to engage the hooking portion **273** protruding from the distal-end tube portion **221** toward the distal-end side A1 with the decreased-diameter portion **33** of the pressing tube **3**. The connection member **250** has the elasticity so as to tend to return to the initial position. At this time, the hooking portion **273** moves outwardly in the radial direction to be disposed at a position (hereinafter referred to as a first position P1) where the hooking portion **273** engages with the decreased-diameter portion **33** from the inside of the radial direction. The decreased-diameter portion **33** is formed across the whole circumference in the inner circumferential surface **32** of the pressing tube main body **31**. Accordingly, it is possible for the surgeon to make the hooking portion **273** and the decreased-diameter portion **33** to be definitely engaged with each other despite of the position of the hooking portion **273** in the circumferential direction C. The decreased-diameter portion **33** may be formed across at least a portion of the inner circumferential surface **32** of the pressing tube main body **31**.

The user advances the operation wire **230** to connect the proximal-end portion **26** of the clip **2** and the arrowhead hook **231**. As a result, the clip unit **1** is loaded inside the clip introduction device **200**.

FIG. **10** is a cross-sectional view showing the clip introduction device **200** into which the clip unit **1** is loaded. The user introduces the clip unit **1** that is loaded in the clip introduction device **200** into the body through the channel of the endoscope. The user operates the operation portion **240** to grasp the tissue T by the clip **2**.

The user retracts the slider **242** along the operation portion main body **241** to retract the clip **2** (traction step). By pulling the proximal-end portion **26** of the clip **2** to the proximal-end side A2, the pair of arms **21** are retracted into the pressing tube **3** and the pair of arms **21** are gradually closed. When the slider **242** is advanced along the operation portion main body **241** in this state, the arrowhead hook **231** is advanced. Since the proximal-end portion **26** of the clip **2** protrudes toward the distal-end side A1, the pair of arms **21** protrude from the pressing tube **3** and the pair of arms **21** gradually open. At this time, the decreased-diameter portion **33** of the pressing tube **3** is engaged with the hooking portion **273** such that the pressing tube **3** does not move toward the distal-end side A1. Accordingly, it is possible for the user to make the pair of arms **21** to return to the open state to re-grasp the tissue T (re-opening).

FIG. **11** is a cross-sectional view showing the clip unit **1** where the clip **2** is locked and the clip introduction device **200**. By further pulling the proximal-end portion **26** toward the proximal-end side A2, the engaging portion **25** is retracted into the internal space **38** of the pressing tube **3**. When the engaging portion **25** is retracted into the internal space **38** of the pressing tube **3**, the engaging portion **25** and the inner circumferential surface **32** of the pressing tube **3** are engaged with each other. As a result, the movement of the clip **2** toward the distal-end side A1 with respect to the pressing tube **3** is restricted and the pair of arms **21** are locked in the closed state. When the pair of arms **21** are locked in the closed state, it is impossible for the pair of arms **21** to return to the open state.

FIG. **12** is a cross-sectional view showing the clip introduction device **200** where the arrowhead hook **231** is further pulled. The engaging portion **25** and the inner circumferential surface **32** of the pressing tube **3** are engaged with each other and the pair of arms **21** are locked in the closed state such that the clip **2** is not further pulled toward the proximal-end side A2. The arrowhead hook **231** of the pulled operation wire **230** is separated from the proximal-end portion **26** to be pulled toward the proximal-end side A2.

The enlarged-diameter portion **232** of the pulled operation wire **230** moves in the gap between the deformation portions **274** of the connection member **250** toward the proximal-end side A2. The distance D2 between the deformation portions **274** is smaller than the outer diameter D1 of the enlarged-diameter portion **232** of the operation wire **230** (D1>D2). Accordingly, the enlarged-diameter portion **232** comes into contact with the deformation portions **274** to make the deformation portions **274** to deform so as to extend along the longitudinal direction A. As a result, the hooking portion **273** at the distal-end side moves to a position (hereinafter referred to as a second position P2) at the inside in the radial direction with respect to the first position P1. In other words, the distal-end portion of the connection member **250** is decreased in the dimeter (diameter decreasing step). In other words, a first radial distance is greater than a second radial distance. The first radial distance is from hooking portion **273** to a central axis of the sheath **220** in the first position P1. The second radial distance is from hooking portion **273** to a central axis of the sheath **220** in the second position P2. The hooking portion **273** that is disposed at the second position P2 is in the state in which the hooking portion **273** is not engaged with the decreased-diameter portion **33**, or the state in which the engagement with the decreased-diameter portion **33** is easy to be released.

FIG. **13** is a cross-sectional view showing the clip introduction device **200** from which the clip unit **1** is separated. The user further pulls the clip **2**. The engagement between the decreased-diameter portion **33** and the hooking portion **273** is disengaged such that the clip unit **1** and the clip introduction device **200** are separated. The user retracts the sheath **220** to indwell the clip unit **1** in the state of ligating the tissue inside the body (indwelling step).

According to the clip delivery device **300** and the clip introduction device **200** according to the present embodiment, it is possible for the clip **2** of the clip unit **1** to re-grasp the tissue (re-opening) such that the loading and the separation of the clip unit **1** with respect to the clip introduction device **200** can be definitely performed.

As described above, the first embodiment of the present disclosure has been described in detail with reference to the drawings; however, the specific configuration is not limited to the present embodiment, and design changes and the like are included within the scope of the present disclosure. Also, the configurational elements shown in the present embodiment and the modification examples shown below can be combined as appropriate.

Second Embodiment

A second embodiment of the present disclosure will be described by referring from FIG. **14** to FIG. **20**. In the following description, the described configurations and the common configurations will be designated with the same reference signs and the duplicate description will be omitted. The clip delivery device according to the second embodiment is different from the clip delivery device **300** according to the first embodiment in the connection member **250**.

The clip delivery device according to the present embodiment includes a clip introduction device (applicator) **200**B

and the clip unit **1**. The clip introduction device (applicator) **200**B includes the sheath **220**, an operation wire **230**B, the operation portion **240**, and a connection member **250**B.

The operation wire (power transmission member) **230**B includes the arrowhead hook **231**, the enlarged-diameter portion **232**, a second enlarged-diameter portion **233** provided at the proximal end with respect to the enlarged-diameter portion **232**, and the wire **235**. The outer diameter of the second enlarged-diameter portion **233** is larger than the inner diameter of the annular portion **261**, and the second enlarged-diameter portion **233** is impossible to pass through the internal space of the annular portion **261**.

FIG. **14** is a perspective view showing the connection portion **250**B.

The connection portion **250**B includes the support portion **260** and a connection arm **270**B. The proximal end of the connection arm **270**B (first connection arm **271**B and second connection arm **272**B) is attached to the support portion **260**.

The connection arm **270**B is arranged at both sides in the left-right direction C orthogonal to the longitudinal direction A and the up-down direction B. The first connection arm **271**B and the second connection arm **272**B are formed in a shape symmetrical with respect to the central axis O**2** in the longitudinal direction A of the connection member **250**B.

The connection arm **270**B (first connection arm **271**B and second connection arm **272**B) includes the hooking portion **273** and a deformation portion **274**B.

The deformation portion **274**B is a tapered portion formed in an intermediate portion of the connection arm **270**B. Specifically, the deformation portion **274**B is formed in a tapered shape so as to approach the central axis O**1** from the distal-end side A**1** toward the proximal-end side A**2**. In other words, the distance D**3** between the distal ends of the deformation portions **274**B is larger than the distance D**4** between the proximal ends of the deformation portions **274**B (D**3**>D**4**).

The distance D**3** between the distal ends of the deformation portions **274**B is larger than the outer diameter D**5** of the proximal-end opening portion **225** (D**3**>D**5**). In the present embodiment, the outer diameter D**1** of the enlarged-diameter portion **232** of the operation wire **230**B is smaller than the outer diameter D**5** of the proximal-end opening portion **225** (D**5**>D**1**). Accordingly, the enlarged-diameter portion **232** can pass through the proximal-end opening portion **225**.

The connection arm **270**B (first connection arm **271**B and second connection arm **272**B) is configured such that at least the deformation portion **274**B has the elasticity and is movable at least in the left-right direction C. In the present embodiment, in the state without receiving any external force, the connection arm **270**B is arranged at a position (the initial position) where the first connection arm **271**B and the second connection arm **272**B are substantially parallel to each other.

Next, the operations and effect of the clip delivery device according to the present embodiment will be described by referring from FIG. **15** to FIG. **20**.

FIG. **15** is a cross-sectional view showing the clip introduction device **200**B before loading the clip unit **1**. Before loading the clip unit **1**, the connection arm **270**B of the connection member **250**B is disposed at the initial position.

FIG. **16** is a cross-sectional view showing the clip introduction device **200**B that is connected to the pressing tube **3**. The user pushes the clip unit **1** toward the clip introduction device **200**B from the distal-end side A**1** so as to engage the hooking portion **273** protruding from the distal-end tube portion **221** toward the distal-end side A**1** with the decreased-diameter portion **33** of the pressing tube **3**. At this time, the second enlarged-diameter portion **233** is supporting the connection member **250**B from the proximal-end side A**2** and the connection member **250**B does not move to the proximal-end side A**2**. The connection member **250**B has the elasticity so as to tend to return to the initial position. At this time, the hooking portion **273** moves outwardly in the radial direction to be disposed at a position (the first position P**1**) where the hooking portion **273** engages with the decreased-diameter portion **33** from the inside of the radial direction.

The user advances the operation wire **230**B to connect the proximal-end portion **26** of the clip **2** and the arrowhead hook **231**. As a result, the clip unit **1** is loaded inside the clip introduction device **200**.

FIG. **17** is a cross-sectional view showing the clip introduction device **200**B into which the clip unit **1** is loaded. The user introduces the clip unit **1** that is loaded in the clip introduction device **200**B into the body through the channel of the endoscope. The user operates the operation portion **240** to grasp the tissue T by the clip **2**.

The user retracts the slider **242** along the operation portion main body **241** such that the arrowhead hook **231** is retracted. By pulling the proximal-end portion **26** of the clip **2** to the proximal-end side A**2**, the pair of arms **21** are retracted into the pressing tube **3** and the pair of arms **21** are gradually closed. In this state, when the pulling force to the proximal-end portion **26** is released, due to the self-expanding force of the pair of arms **21**, the clip **2** moves to the distal-end side A**1** while returning to the open state. It is possible for the user to make the pair of arms **21** to return to the open state to re-grasp the tissue T.

FIG. **18** is a cross-sectional view showing the clip unit **1** where the clip **2** is locked and the clip introduction device **200**B. By further pulling the proximal-end portion **26** toward the proximal-end side A**2**, the engaging portion **25** is retracted into the internal space **38** of the pressing tube **3**. When the engaging portion **25** is retracted into the internal space **38** of the pressing tube **3**, the engaging portion **25** and the inner circumferential surface **32** of the pressing tube **3** are engaged with each other. As a result, the movement of the clip **2** toward the distal-end side A**1** with respect to the pressing tube **3** is restricted and the pair of arms **21** are locked in the closed state. When the pair of arms **21** are locked in the closed state, it is impossible for the pair of arms **21** to return to the open state.

FIG. **19** is a cross-sectional view showing the clip introduction device **200**B where the arrowhead hook **231** is further pulled. The engaging portion **25** and the inner circumferential surface **32** of the pressing tube **3** are engaged with each other and the pair of arms **21** are locked in the closed state such that the clip **2** is not further pulled toward the proximal-end side A**2**. The arrowhead hook **231** of the pulled operation wire **230**B is separated from the proximal-end portion **26** to be pulled toward the proximal-end side A**2**.

The enlarged-diameter portion **232** of the pulled operation wire **230**B passes through the proximal-end opening portion **225** of the distal-end tube portion **221** to move toward the proximal-end side A**2**. The enlarged-diameter portion **232** of the operation wire **230**B passing through the proximal-end opening portion **225** moves the connection member **250**B toward the proximal-end side A**2**.

The distance between the distal ends of the deformation portions **274**B is larger than the outer diameter D**5** of the proximal-end opening portion **225** (D**3**>D**5**). Accordingly, the proximal-end opening portion **225** comes into contact with the deformation portions **274**B to make the deformation portions **274**B to deform inwardly in the radial direction so

as to approach the central axis O2. As a result, the hooking portion **273** at the distal-end side moves to a position (the second position P2) at the inside in the radial direction with respect to the first position P1. In other words, the distal-end portion of the connection member **250** is decreased in the dimeter. The hooking portion **273** that is disposed at the second position P2 is in the state in which the hooking portion **273** is not engaged with the decreased-diameter portion **33**, or the state in which the engagement with the decreased-diameter portion **33** is easy to be released.

FIG. **20** is a cross-sectional view showing the clip introduction device **200**B from which the clip unit **1** is separated. The user further pulls the clip **2**. The engagement between the decreased-diameter portion **33** and the hooking portion **273** is disengaged such that the clip unit **1** and the clip introduction device **200**B are separated. The user retracts the sheath **220** to indwell the clip unit **1** in the state of ligating the tissue inside the body.

The user advances the arrowhead hook **231** to advance the connection member **250**B by the second enlarged-diameter portion **233** so as to return the connection arm **270**B to the initial position where the connection arm **270**B is engageable with the pressing tube **3**.

According to the clip delivery device and the clip introduction device **200**B according to the present embodiment, it is possible for the clip **2** of the clip unit **1** to re-grasp the tissue (re-opening) such that the loading and the separation of the clip unit **1** with respect to the clip introduction device **200**B can be definitely performed.

As described above, the second embodiment of the present disclosure has been described in detail with reference to the drawings; however, the specific configuration is not limited to the present embodiment, and design changes and the like are included within the scope of the present disclosure. Also, the configurational elements shown in the present embodiment and the modification examples shown below can be combined as appropriate.

Third Embodiment

A third embodiment of the present disclosure will be described by referring from FIG. **21** to FIG. **27**. In the following description, the described configurations and the common configurations will be designated with the same reference signs and the duplicate description will be omitted. The clip delivery device according to the third embodiment is different from the clip delivery device **300** according to the first embodiment in the connection member **250**.

The clip delivery device according to the third embodiment includes a clip introduction device (applicator) **200**C and the clip unit **1**. The clip introduction device (applicator) **200**C includes the sheath **220**, the operation wire **230**, the operation portion **240**, and a connection member **250**C.

FIG. **21** is a perspective view showing the connection portion **250**C.

The connection portion **250**C includes the support portion **260** and a connection arm **270**C. The proximal end of the connection arm **270**C (first connection arm **271**C and second connection arm **272**C) is attached to the support portion **260**.

The connection arm **270**C is arranged at both sides in the left-right direction C orthogonal to the longitudinal direction A and the up-down direction B. The first connection arm **271**C and the second connection arm **272**C are formed in a shape symmetrical with respect to the central axis O2 in the longitudinal direction A of the connection member **250**C.

The connection arm **270**C (first connection arm **271**C and second connection arm **272**C) includes a hooking portion **273**C.

The hooking portion (hook) **273**C is a hook bending outwardly in the radial direction, and is provided at the distal end of the connection arm **270**C. The hooking portion **273**C protrudes from the distal-end tube portion **221** toward the distal-end side A1. The hooking portion **273**C is engageable with the decreased-diameter portion **33** of the pressing tube **3**.

The connection arm **270**C (first connection arm **271**C and second connection arm **272**C) has the elasticity and is movable at least in the left-right direction C. In the present embodiment, in the state without receiving any external force, the connection arm **270**C is arranged at a position (the initial position) where the first connection arm **271**C and the second connection arm **272**C approach each other as toward the distal-end side A1.

Next, the operations and effect of the clip delivery device according to the present embodiment will be described by referring from FIG. **22** to FIG. **27**.

FIG. **22** is a cross-sectional view showing the clip introduction device **200**C before loading the clip unit **1**. Before loading the clip unit **1**, the connection arm **270**C of the connection member **250**C is disposed at the initial position.

FIG. **23** is a cross-sectional view showing the clip introduction device **200**C that is connected to the pressing tube **3**. The user advances the operation wire **230** in the state of pushing the clip unit **1** toward the clip introduction device **200**C from the distal-end side A1. The hooking portion **273** protruding from the distal-end tube portion **221** toward the distal-end side A1 is pushed to the outside in the radial direction and disposed at a position (the first position P1) to be engaged with the decreased-diameter portion **33** from the inside in the radial direction since the advanced enlarged-diameter portion **232** comes into contact with the connection arm **270**C.

The user advances the operation wire **230** to connect the proximal-end portion **26** of the clip **2** and the arrowhead hook **231**. As a result, the clip unit **1** is loaded inside the clip introduction device **200**C.

FIG. **24** is a cross-sectional view showing the clip introduction device **200**C into which the clip unit **1** is loaded. The user introduces the clip unit **1** that is loaded in the clip introduction device **200**C into the body through the channel of the endoscope. The user operates the operation portion **240** to grasp the tissue T by the clip **2**.

The user retracts the slider **242** along the operation portion main body **241** such that the arrowhead hook **231** is retracted. By pulling the proximal-end portion **26** of the clip **2** to the proximal-end side A2, the pair of arms **21** are retracted into the pressing tube **3** and the pair of arms **21** are gradually closed. In this state, when the pulling force to the proximal-end portion **26** is released, due to the self-expanding force of the pair of arms **21**, the clip **2** moves to the distal-end side A1 while returning to the open state. It is possible for the user to make the pair of arms **21** to return to the open state to re-grasp the tissue T.

FIG. **25** is a cross-sectional view showing the clip unit **1** where the clip **2** is locked and the clip introduction device **200**C. By further pulling the proximal-end portion **26** toward the proximal-end side A2, the engaging portion **25** is retracted into the internal space **38** of the pressing tube **3**. When the engaging portion **25** is retracted into the internal space **38** of the pressing tube **3**, the engaging portion **25** and the inner circumferential surface **32** of the pressing tube **3** are engaged with each other. As a result, the movement of

the clip **2** toward the distal-end side A**1** with respect to the pressing tube **3** is restricted and the pair of arms **21** are locked in the closed state. When the pair of arms **21** are locked in the closed state, it is impossible for the pair of arms **21** to return to the open state.

The retracted enlarged-diameter portion **232** separates from the connection arm **270**C to not to be in contact with the connection arm **270**C. The connection member **250**C has the elasticity to tend to return to the initial position. As a result, the hooking portion **273**C at the distal-end side moves to the position (the second position P**2**) at the inside of the radial direction with respect to the first position P**1**. In other words, the distal-end portion of the connection member **250**C is decreased in the diameter. The hooking portion **273** that is disposed at the second position P**2** is in the state in which the hooking portion **273** is not engaged with the decreased-diameter portion **33**, or the state in which the engagement with the decreased-diameter portion **33** is easy to be released.

FIG. **26** is a cross-sectional view showing the clip introduction device **200**C from which the arrowhead hook **231** is further pulled. The engaging portion **25** and the inner circumferential surface **32** of the pressing tube **3** are engaged with each other and the pair of arms **21** are locked in the closed state such that the clip **2** is not further pulled toward the proximal-end side A**2**. The arrowhead hook **231** of the pulled operation wire **230** is separated from the proximal-end portion **26** and pulled toward the proximal-end side A**2**.

FIG. **27** is a cross-sectional view showing the clip introduction device **200**C from which the clip unit **1** is separated. The user further pulls the clip **2**. The engagement between the decreased-diameter portion **33** and the hooking portion **273** is disengaged such that the clip unit **1** and the clip introduction device **200** are separated. The user retracts the sheath **220** to indwell the clip unit **1** in the state of ligating the tissue inside the body.

According to the clip delivery device and the clip introduction device **200**C according to the present embodiment, it is possible for the clip **2** of the clip unit **1** to re-grasp the tissue (re-opening) such that the loading and the separation of the clip unit **1** with respect to the clip introduction device **200**C can be definitely performed.

As described above, the third embodiment of the present disclosure has been described in detail with reference to the drawings; however, the specific configuration is not limited to the present embodiment, and design changes and the like are included within the scope of the present disclosure. Also, the configurational elements shown in the present embodiment and the modification examples shown above can be combined as appropriate.

What is claimed is:

1. A clip delivery device, comprising:

a sheath;

a wire inserted into the sheath;

a clip detachably connected to the wire and including a plurality of arms, wherein the plurality of arms is movable between an open position and a closed position;

a tube containing at least part of the clip and having a convex portion on an inner surface of the tube; and

a connector provided in the sheath and having a hook, the hook detachably connected with the convex portion of the tube,

wherein the tube is adjacent the sheath along a longitudinal axis,

wherein the hook is movable between a first position and a second position,

wherein, in the first position, the hook engages the convex portion of the tube and is located at a first radial distance from a central axis of the sheath,

wherein, in the second position, the hook is disengaged from the convex portion of the tube and is located at a second radial distance from the central axis of the sheath,

wherein the first radial distance is greater than the second radial distance, and

wherein, when the wire is moved proximal to the sheath, the hook is moved from the first position to the second position.

2. The clip delivery device according to claim **1**, wherein the convex portion extends circumferentially around at least a portion of the inner surface of the tube, and

wherein the convex portion protrudes from the inner surface of the tube in a direction intersecting with the longitudinal axis.

3. The clip delivery device according to claim **1**, wherein, when the hook is in the first position, the engagement of the hook with the convex portion connects the hook to the tube.

4. The clip delivery device according to claim **1**, wherein at least part of the connector has an elasticity, and

wherein the hook is in the first position when no external force is applied to the hook.

5. The clip delivery device according to claim **4**, wherein the connector includes a connection arm, and

wherein the connection arm includes:

the hook at a distal end of the connection arm, and

an elastically deformable deformation portion.

6. The clip delivery device according to claim **5**, wherein the hook moving from the first position to the second position results from the wire elastically deforming the deformation portion when the wire is moved proximal to the sheath.

7. The clip delivery device according to claim **5**, wherein the deformation portion is semicircular.

8. The clip delivery device according to claim **6**, wherein the connector includes a support base having an annular shape,

wherein the wire passes through an opening in the annular shape,

wherein the connection arm is one of a plurality of connection arms, and

wherein proximal-end portions of the plurality of connection arms connect to the support base on different sides of the support base in a radial direction.

9. The clip delivery device according to claim **4**, wherein the connector includes a connection arm,

wherein the connection arm includes:

the hook at a distal end of the connection arm, and

an elastically deformable deformation portion,

wherein the connection arm includes:

the hook at a distal end of the connection arm, and

an elastically deformable deformation portion, and

wherein, the hook moving from the first position to the second position results from the sheath elastically deforming the deformation portion when the wire is moved proximal to the sheath.

10. The clip delivery device according to claim **9**, wherein the deformation portion has a tapered shape.

11. The clip delivery device according to claim **9**, wherein the connector includes a support base having an annular shape,

wherein the wire passes through an opening in the annular shape,

wherein the connection arm is one of a plurality of connection arms, and

wherein proximal-end portions of the plurality of connection arms connect to the support base on different sides of the support base in a radial direction.

12. The clip delivery device according to claim **1**, wherein at least part of the connector has an elasticity, and

wherein the hook is in the second position when no external force is applied to the hook.

13. The clip delivery device according to claim **12**, wherein the connector includes a connection arm,

wherein the hook is at a distal end of the connection arm, and

wherein, the hook moving from the second position to the first position results from the wire elastically deforming the deformation portion when the wire is moved distal to the sheath.

14. A clip delivery device, comprising:

a sheath;

a wire inserted into the sheath;

a clip detachably connected to the wire and including a plurality of arms, wherein the plurality of arms is movable between an open position and a closed position;

a tube containing at least part of the clip and having a convex portion on an inner surface of the tube; and

a connector provided in the sheath and having a distal-end portion and a deformation portion,

wherein the distal-end portion is detachably connected to the convex portion on an inner surface of the tube,

wherein the deformation portion is elastically deformable, and

wherein, when the wire is moved proximal to the sheath, the deformation portion is elastically deformed to decrease a diameter of the distal-end portion of the connector.

15. The clip delivery device according to claim **14**, wherein the convex portion extends circumferentially around at least a portion of the inner surface of the tube, and

wherein the convex portion protrudes from the inner surface of the tube in a direction intersecting with a longitudinal direction of the tube.

16. The clip delivery device according to claim **14**, wherein the connector includes a connection arm,

wherein the connection arm includes:

a hook at the distal end of the connection arm, and

the deformation portion, and

wherein, elastically deforming the deformation portion to decrease the diameter of the distal-end portion of the connector results from the wire engaging with the deformation portion to deform the deformation member to extend along a longitudinal direction of the connector when the wire is moved proximal to the sheath.

17. The clip delivery device according to claim **14**, wherein the connector includes a connection arm,

wherein the connection arm includes:

the distal end portion at a distal end of the connection arm, and

the deformation portion, and

wherein, elastically deforming the deformation portion to decrease the diameter of the distal-end portion of the connector results from the deformation portion deforming inwardly in a radial direction of the connector as the connector moves proximal to the sheath when the wire moves proximal to the sheath.

18. A method of releasing the clip of the clip delivery device according to claim **1**, the method comprising:

moving the wire proximal to the sheath;

decreasing the diameter of the distal-end portion of the connector; and

separating the clip from the connector and indwelling the tube and the clip.

19. The clip releasing method according to claim **18**, further comprising engaging the wire and the connector, and deforming at least the deformation portion of the connector.

20. The clip unit releasing method according to claim **18**, further comprising moving the connector proximal to the applicator, and deforming at least the deformation portion of the connector.

* * * * *