US 20250284238A1

(19) United States
(12) Patent Application Publication
KOBAYASHI et al.
(10) Pub. No.: US 2025/0284238 A1
(43) Pub. Date: Sep. 11, 2025

(54) **IMAGE FORMING APPARATUS**

(71) Applicant: **CANON KABUSHIKI KAISHA**, Tokyo (JP)

(72) Inventors: **JUNYA KOBAYASHI**, Shizuoka (JP); **SHINYA NODA**, Shizuoka (JP); **NORIYUKI MONDEN**, Boise, ID (US)

(21) Appl. No.: **19/074,214**

(22) Filed: **Mar. 7, 2025**

(30) **Foreign Application Priority Data**

Mar. 11, 2024 (JP) 2024-037323
Mar. 11, 2024 (JP) 2024-037324
Mar. 11, 2024 (JP) 2024-037325

Publication Classification

(51) **Int. Cl.**
G03G 15/00 (2006.01)
G03G 15/01 (2006.01)
G03G 15/16 (2006.01)
G03G 15/20 (2006.01)
G03G 21/16 (2006.01)

(52) **U.S. Cl.**
CPC ***G03G 15/80*** (2013.01); ***G03G 15/0189*** (2013.01); ***G03G 15/167*** (2013.01); ***G03G 15/2017*** (2013.01); ***G03G 15/6511*** (2013.01); ***G03G 15/6552*** (2013.01); ***G03G 15/757*** (2013.01); ***G03G 21/1638*** (2013.01); ***G03G 21/1652*** (2013.01)

(57) **ABSTRACT**

An image forming apparatus includes (i) an apparatus body including first and second end portions located opposite each other in a first direction, the first end portion having an opening, the apparatus body including a first side wall at one end in a second direction that is orthogonal to a vertical direction and to the first direction; (ii) a drawable unit movable in a direction intersecting the second direction and movable between an inside position and an outside position through the opening; (iii) a fixing device located closer to the first end portion than to the second end portion in the first direction; (iv) a power source board configured to supply electrical power to the fixing device; and (v) an inlet electrically connected to the power source board and located closer to the second end portion than to the first end portion in the first direction.

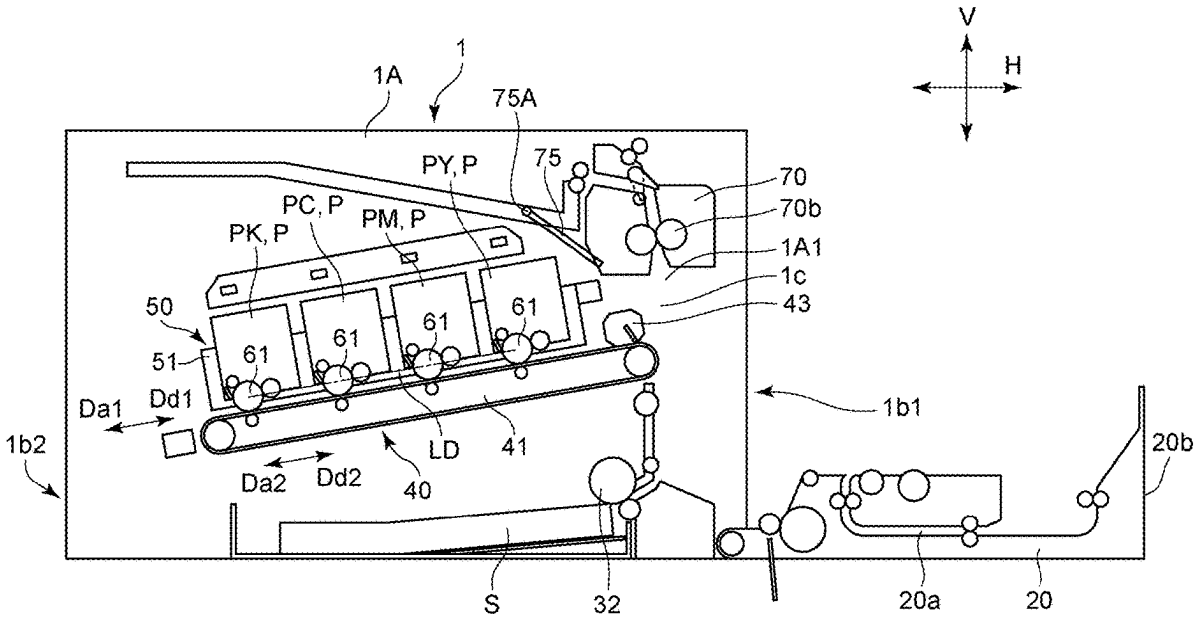

FIG. 1

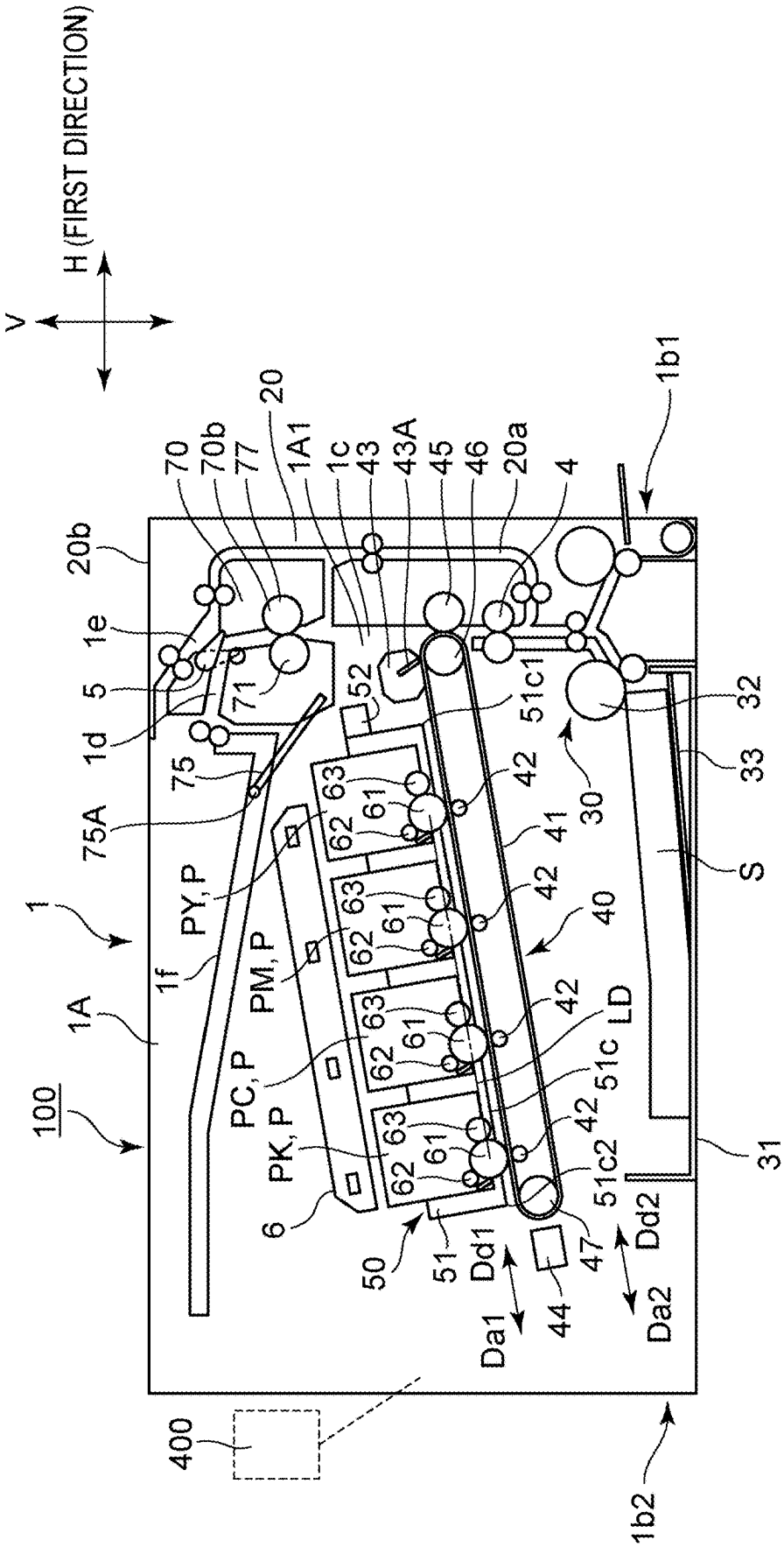
V
H (FIRST DIRECTION)
100
1
1A
1f
1d
1e
5
20b
75A
75
71
70
70b
77
20
1A1
1c
43
43A
45
46
20a
4
1b1
52
51c1
30
32
33
S
31
PY, P
PM, P
PC, P
PK, P
6
50
51
Dd1
Da1
44
47
51c2
Dd2
Da2
LD
51c
40
41
42
61
62
63
400
1b2

FIG. 2

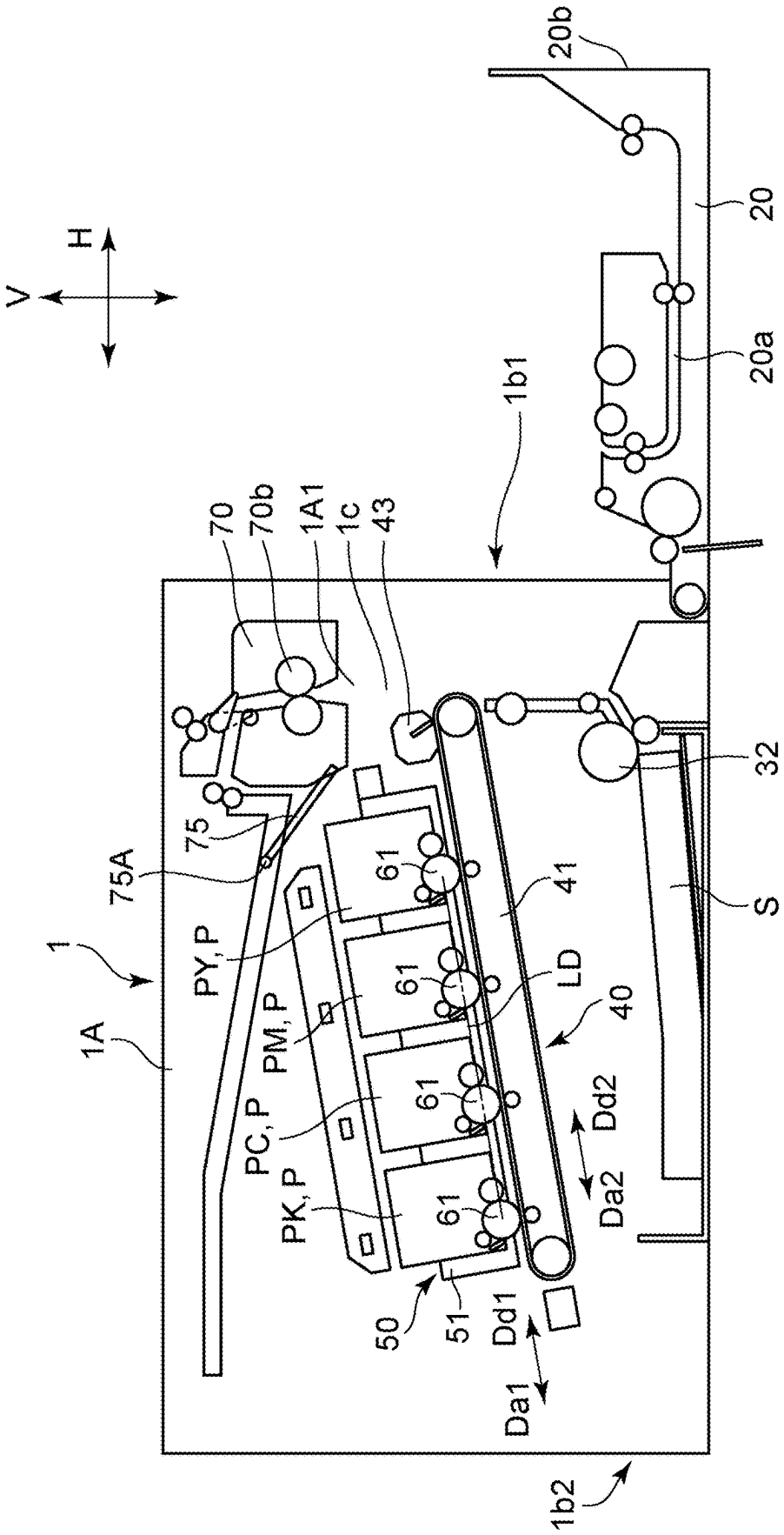
V
H
20b
20
20a
1b1
70
70b
1A1
1c
43
32
S
75
75A
1
1A
PY, P
PM, P
PC, P
PK, P
61
61
61
61
41
LD
40
Dd2
Da2
50
51
Dd1
Da1
1b2

FIG. 3

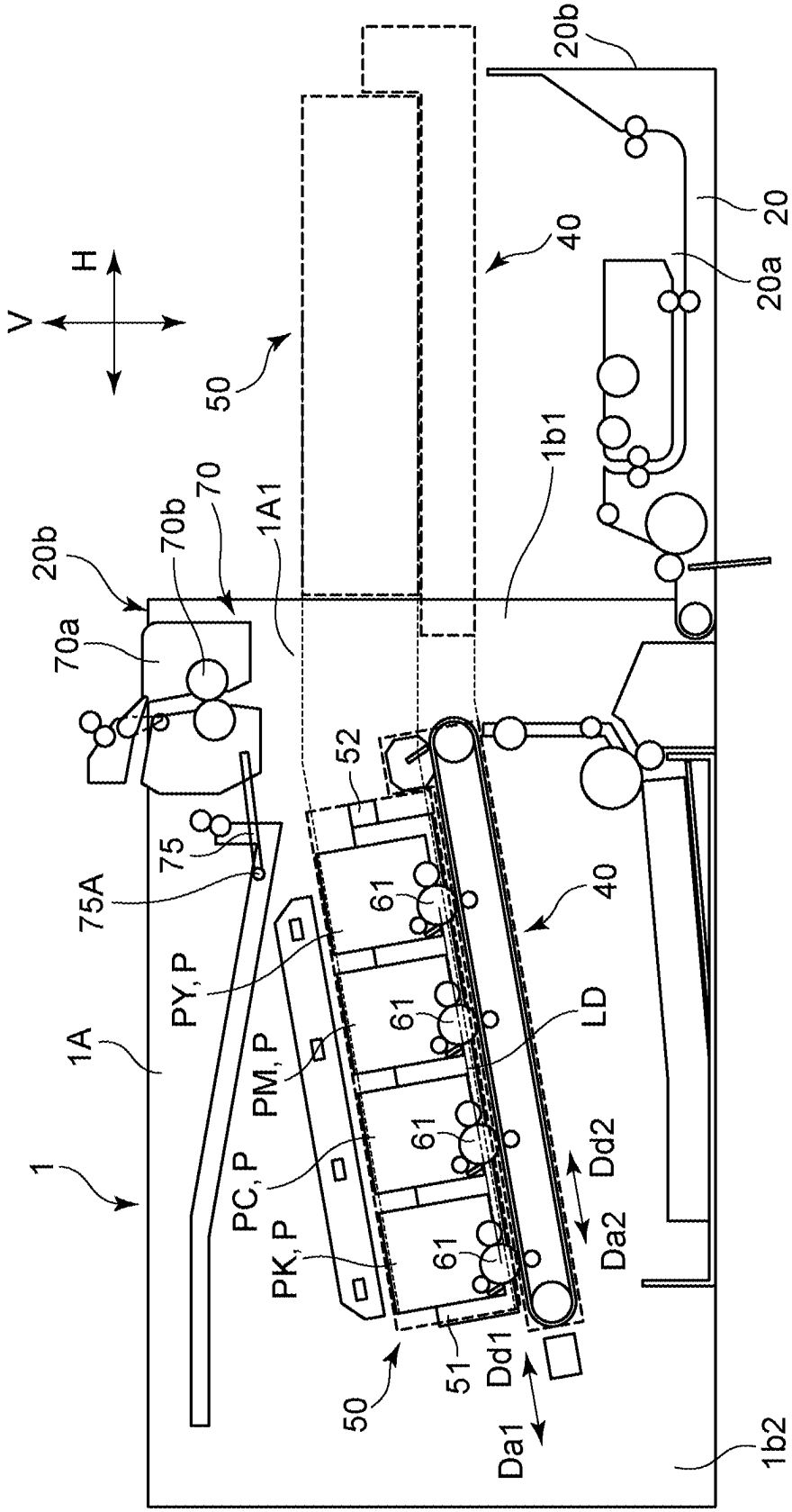
V
H
50
40
20b
20
20a
1b1
1A1
70
70b
20b
70a
52
75
75A
61
40
PY, P
61
LD
1A
PM, P
61
Dd2
1
PC, P
PK, P
61
Da2
51
Dd1
50
Da1
1b2

FIG. 4

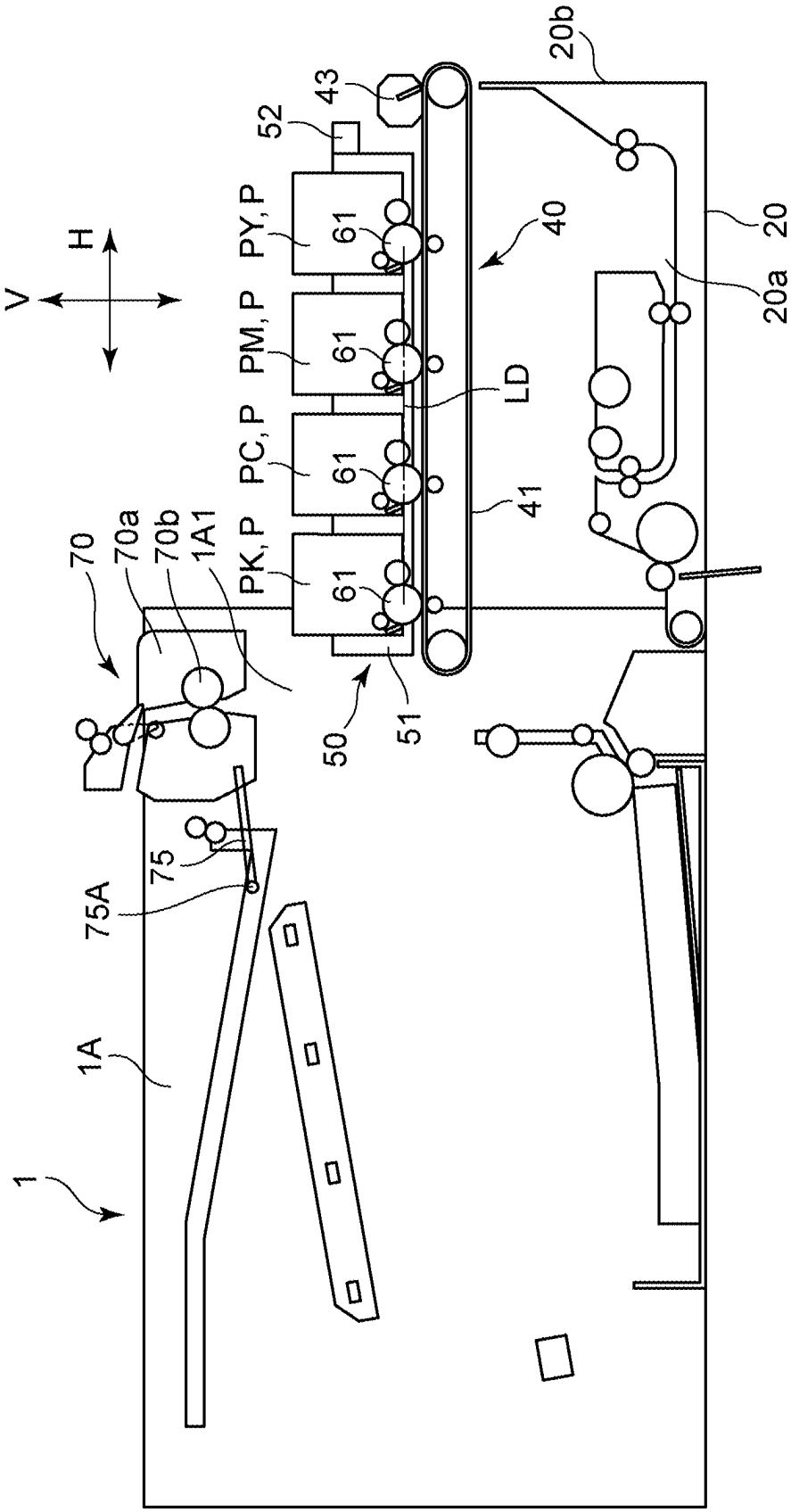
V
H
PY, P
PM, P
PC, P
PK, P
61
52
43
40
41
LD
50
51
20b
20
20a
70
70a
70b
1A1
75
75A
1A
1

FIG. 5

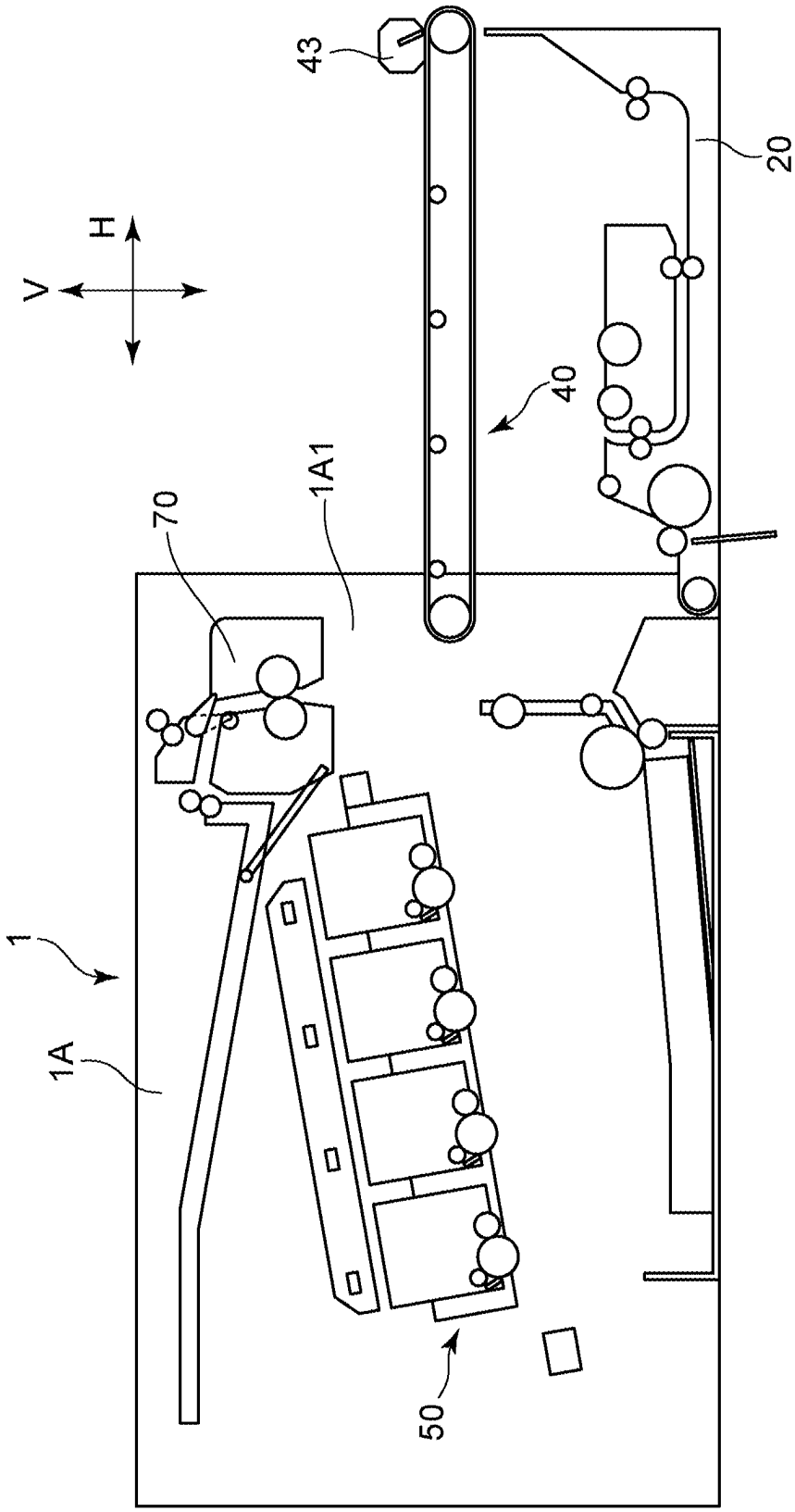

FIG. 6

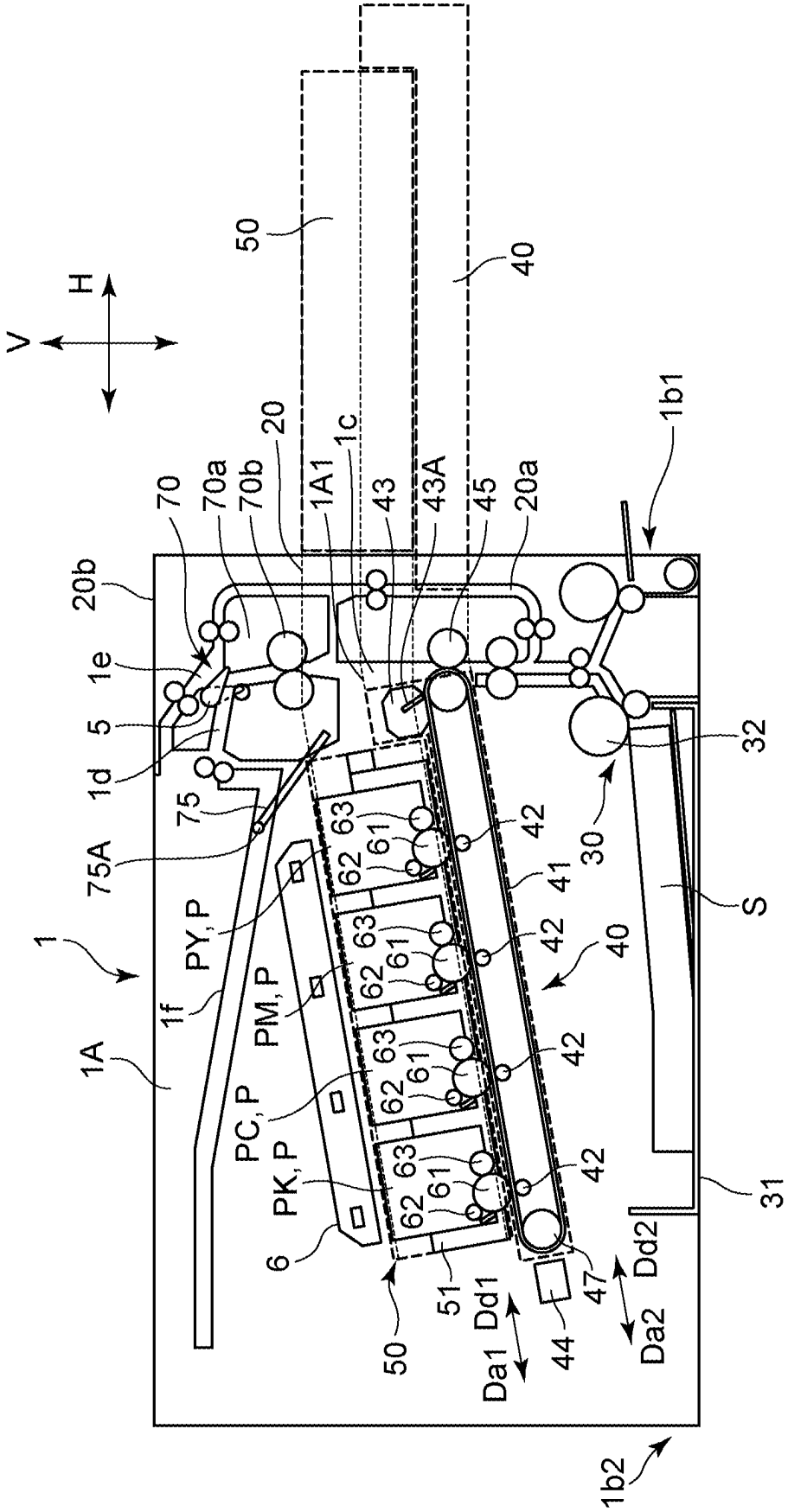
V
H
50
40
1b1
20
70
70a
70b
1A1
1c
43
43A
45
20a
20b
1e
5
1d
75
75A
32
30
S
1
PY, P
1f
PM, P
1A
PC, P
PK, P
6
63
61
62
42
41
40
51
47
Dd1
Dd2
Da1
Da2
44
31
1b2

FIG. 7

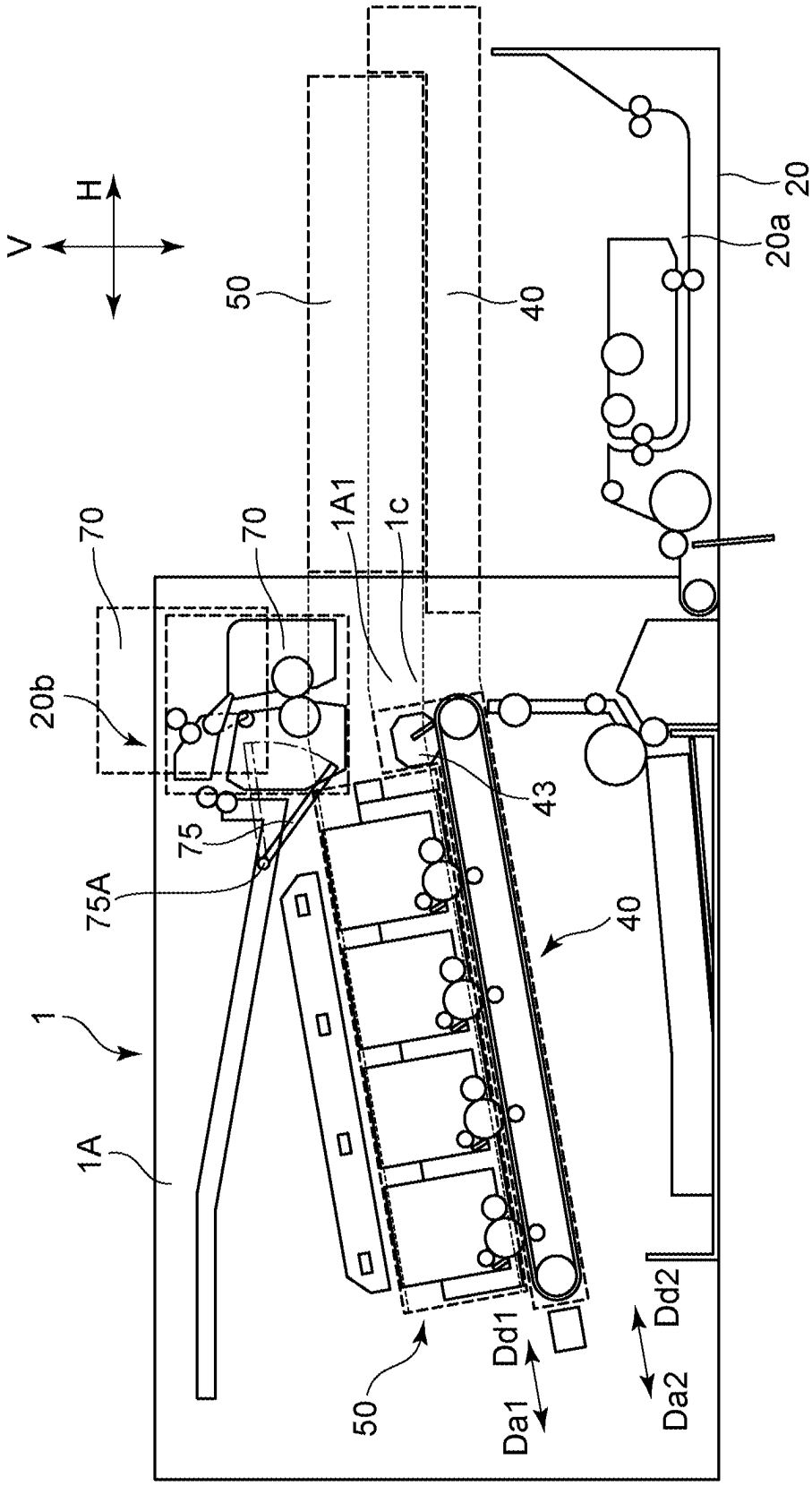

FIG. 8

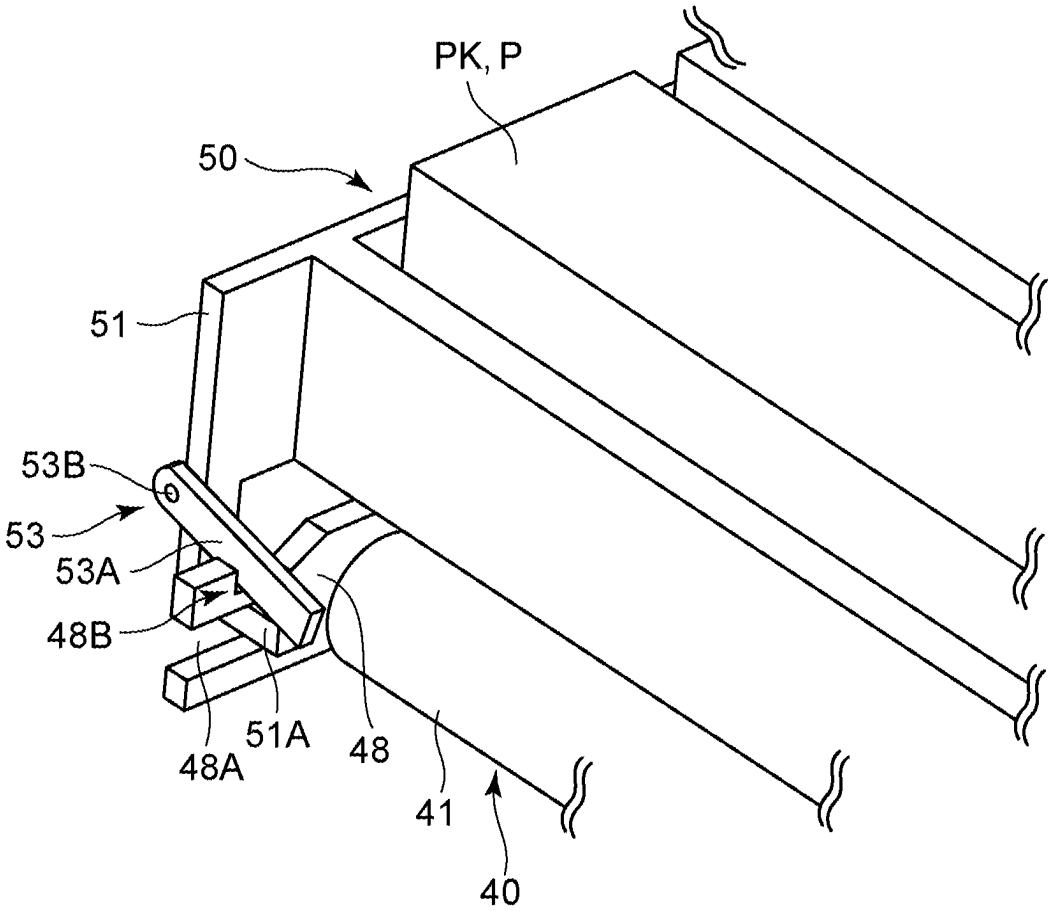

FIG. 9

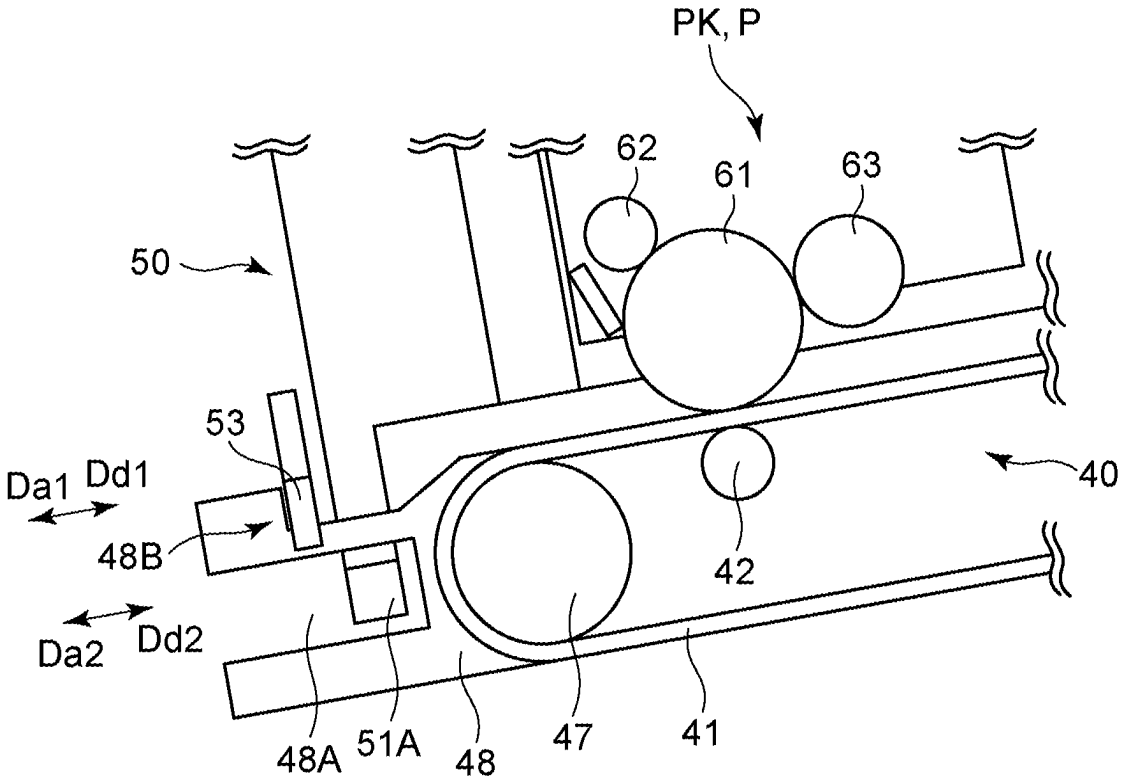

FIG. 10

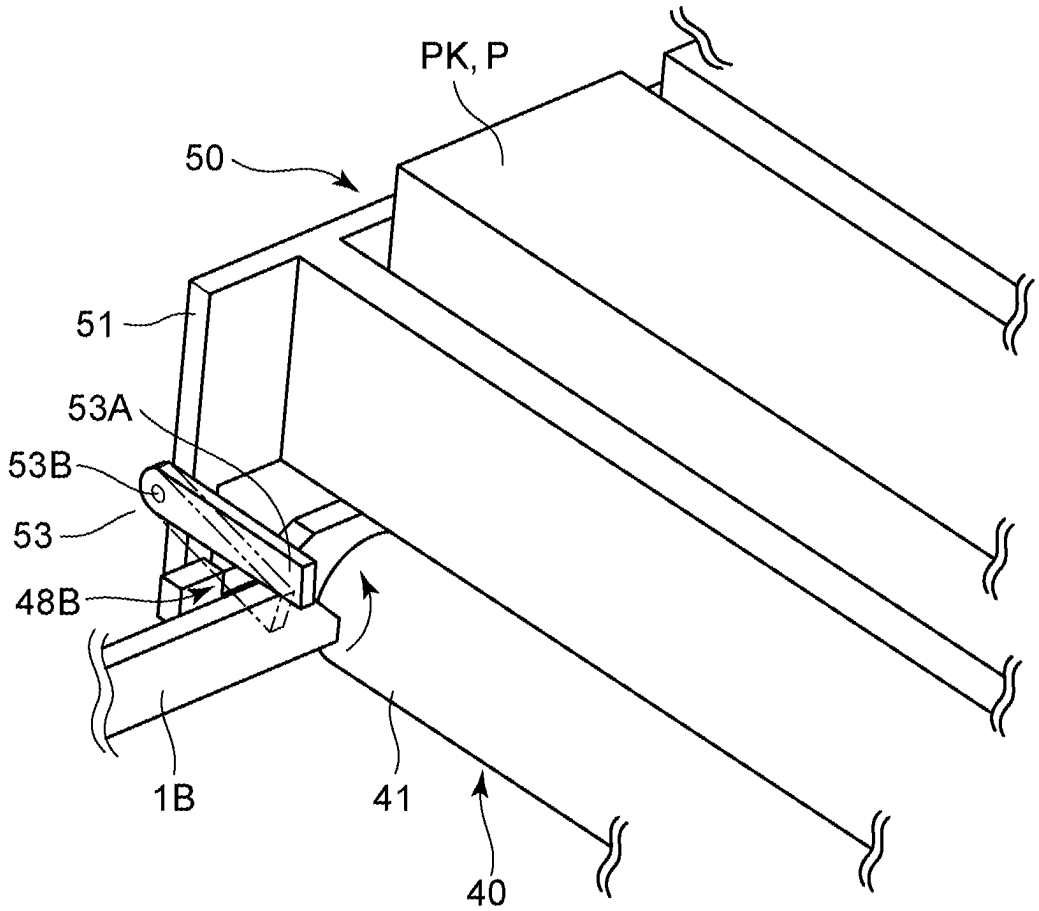

FIG. 11

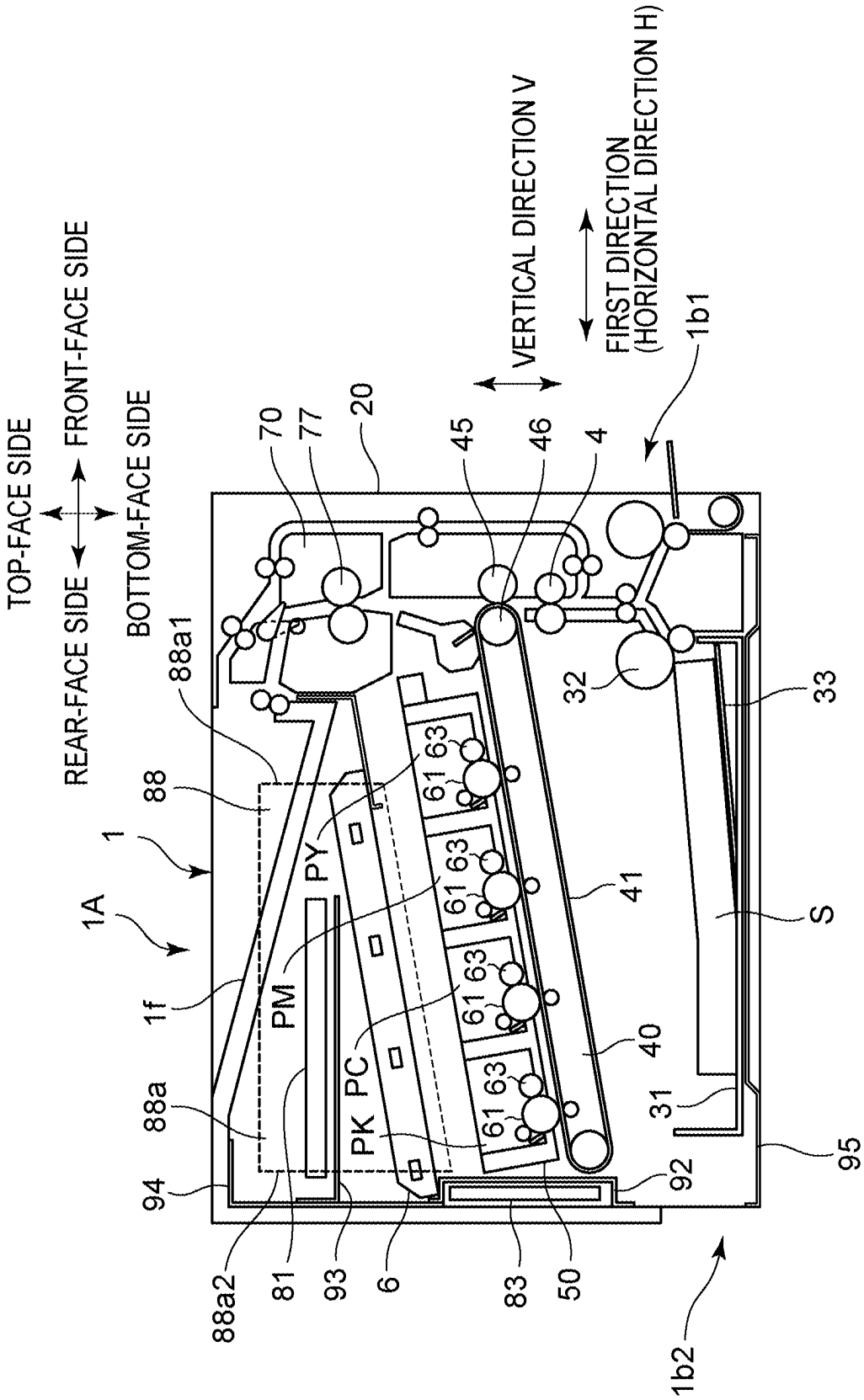
TOP-FACE SIDE
FRONT-FACE SIDE
REAR-FACE SIDE
BOTTOM-FACE SIDE
VERTICAL DIRECTION V
FIRST DIRECTION
(HORIZONTAL DIRECTION H)
1b1
1b2
1
1A
1f
88
88a1
88a
88a2
94
81
93
6
83
50
92
95
31
40
41
S
33
32
4
46
45
20
77
70
PM
PY
PC
PK
61
63

FIG. 12

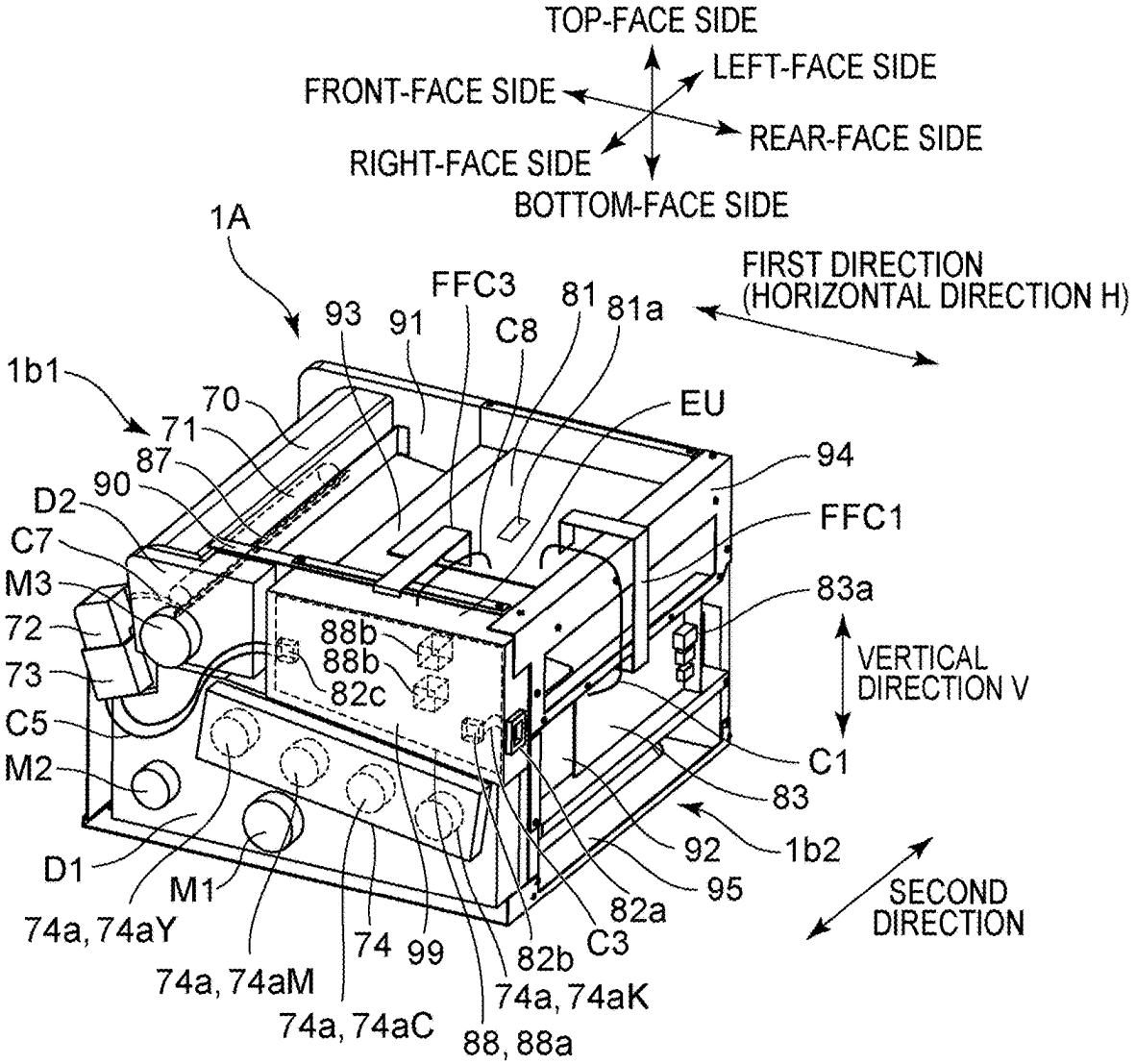
TOP-FACE SIDE
LEFT-FACE SIDE
FRONT-FACE SIDE
REAR-FACE SIDE
RIGHT-FACE SIDE
BOTTOM-FACE SIDE
1A
FIRST DIRECTION
(HORIZONTAL DIRECTION H)
FFC3
81
81a
93
91
C8
1b1
70
71
87
90
D2
C7
M3
72
73
C5
M2
D1
M1
74a, 74aY
74a, 74aM
74a, 74aC
74
99
88, 88a
74a, 74aK
82b
C3
82a
95
92
1b2
83
C1
VERTICAL
DIRECTION V
83a
FFC1
94
EU
88b
88b
82c
SECOND
DIRECTION

FIG. 13

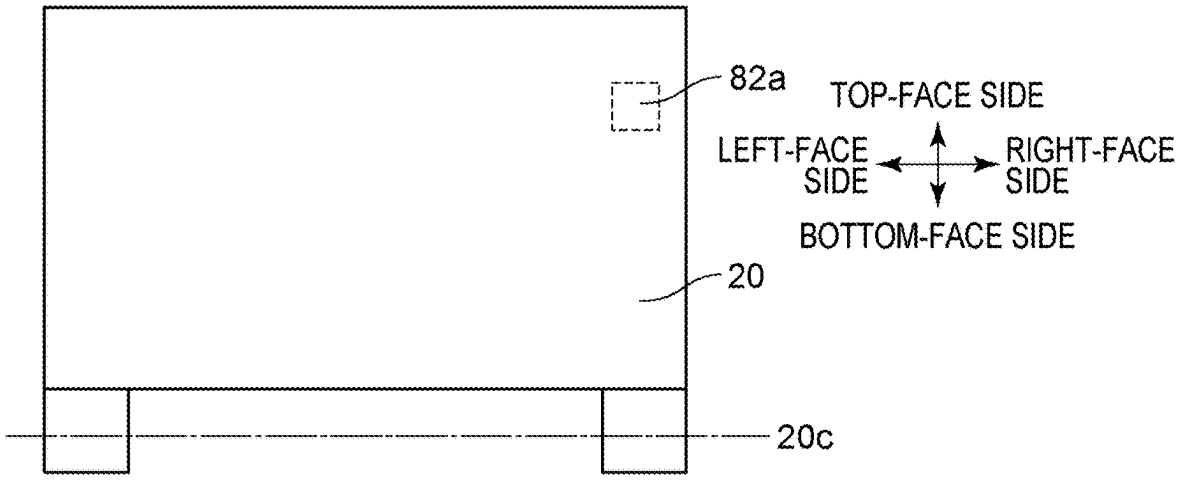
82a
TOP-FACE SIDE
LEFT-FACE SIDE
RIGHT-FACE SIDE
BOTTOM-FACE SIDE
20
20c

FIG. 14

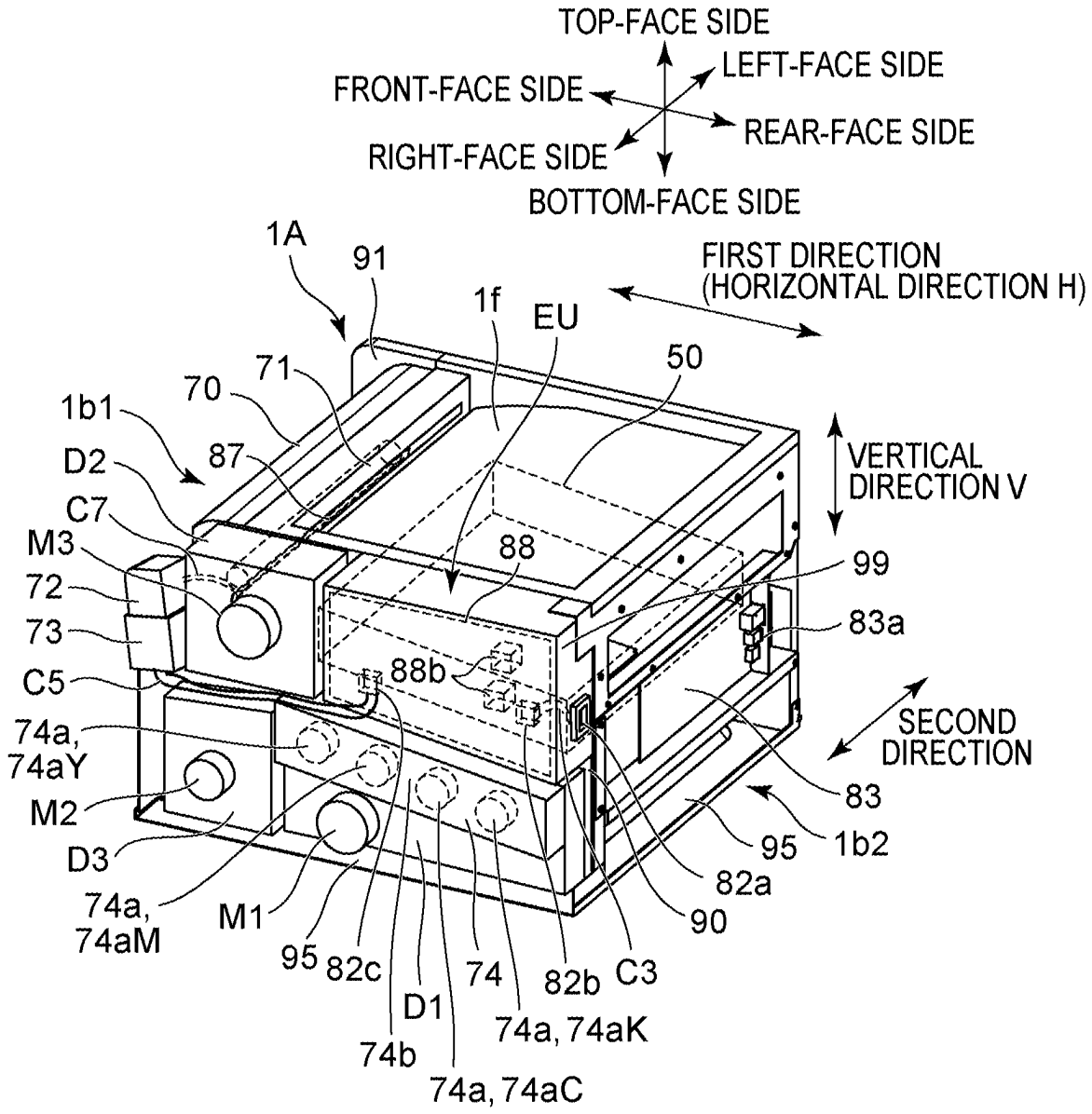
TOP-FACE SIDE
LEFT-FACE SIDE
FRONT-FACE SIDE
REAR-FACE SIDE
RIGHT-FACE SIDE
BOTTOM-FACE SIDE
1A
91
FIRST DIRECTION
(HORIZONTAL DIRECTION H)
1f
EU
50
71
70
1b1
87
D2
C7
M3
72
73
C5
74a,
74aY
M2
D3
74a,
74aM
M1
95
82c
D1
74b
74a, 74aC
74
82b
C3
74a, 74aK
90
82a
95
1b2
83
SECOND
DIRECTION
83a
99
VERTICAL
DIRECTION V
88
88b

FIG. 15

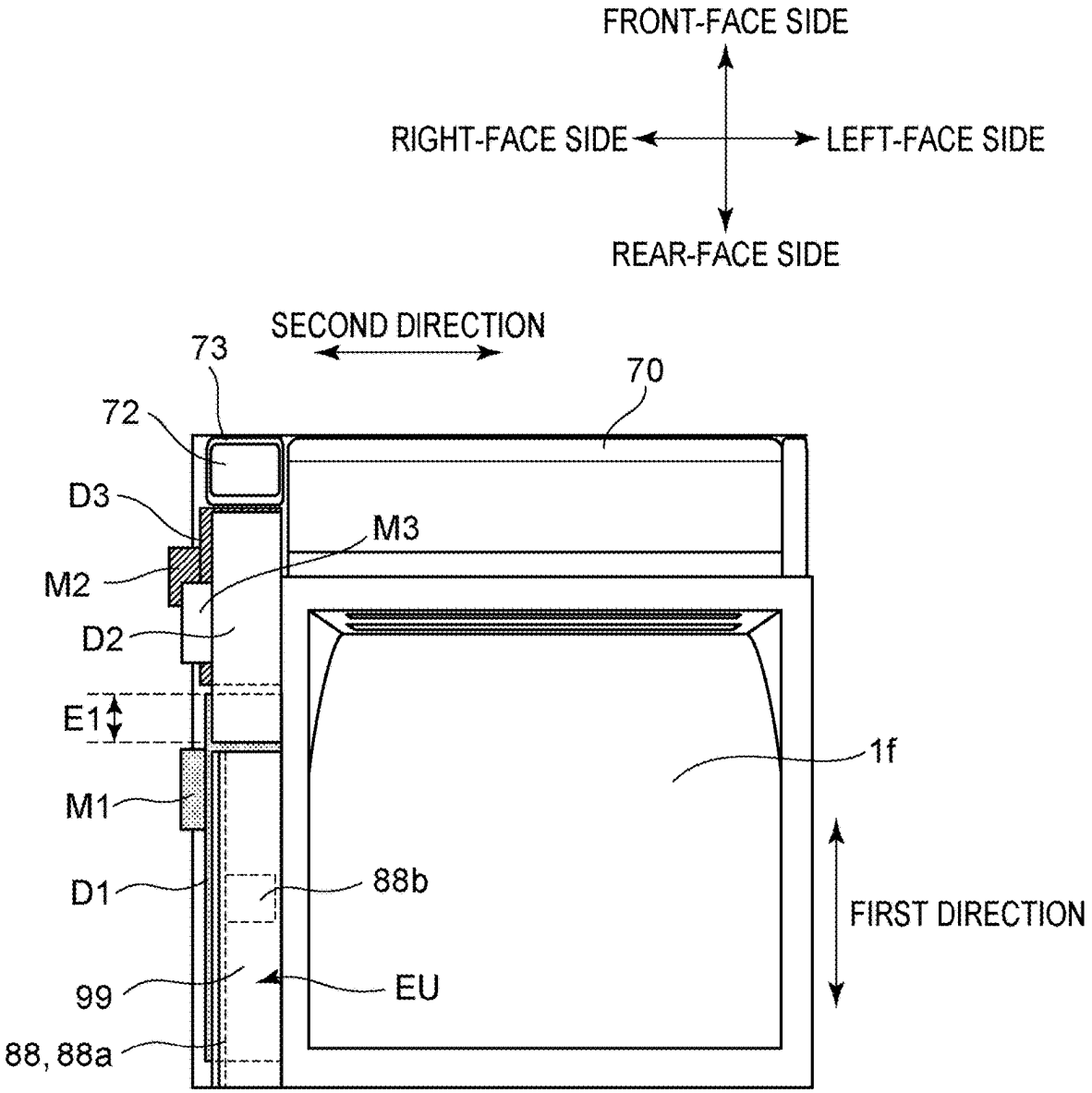
FRONT-FACE SIDE
RIGHT-FACE SIDE
LEFT-FACE SIDE
REAR-FACE SIDE
SECOND DIRECTION
73
70
72
D3
M3
M2
D2
E1
1f
M1
D1
88b
FIRST DIRECTION
99
EU
88, 88a

FIG. 16

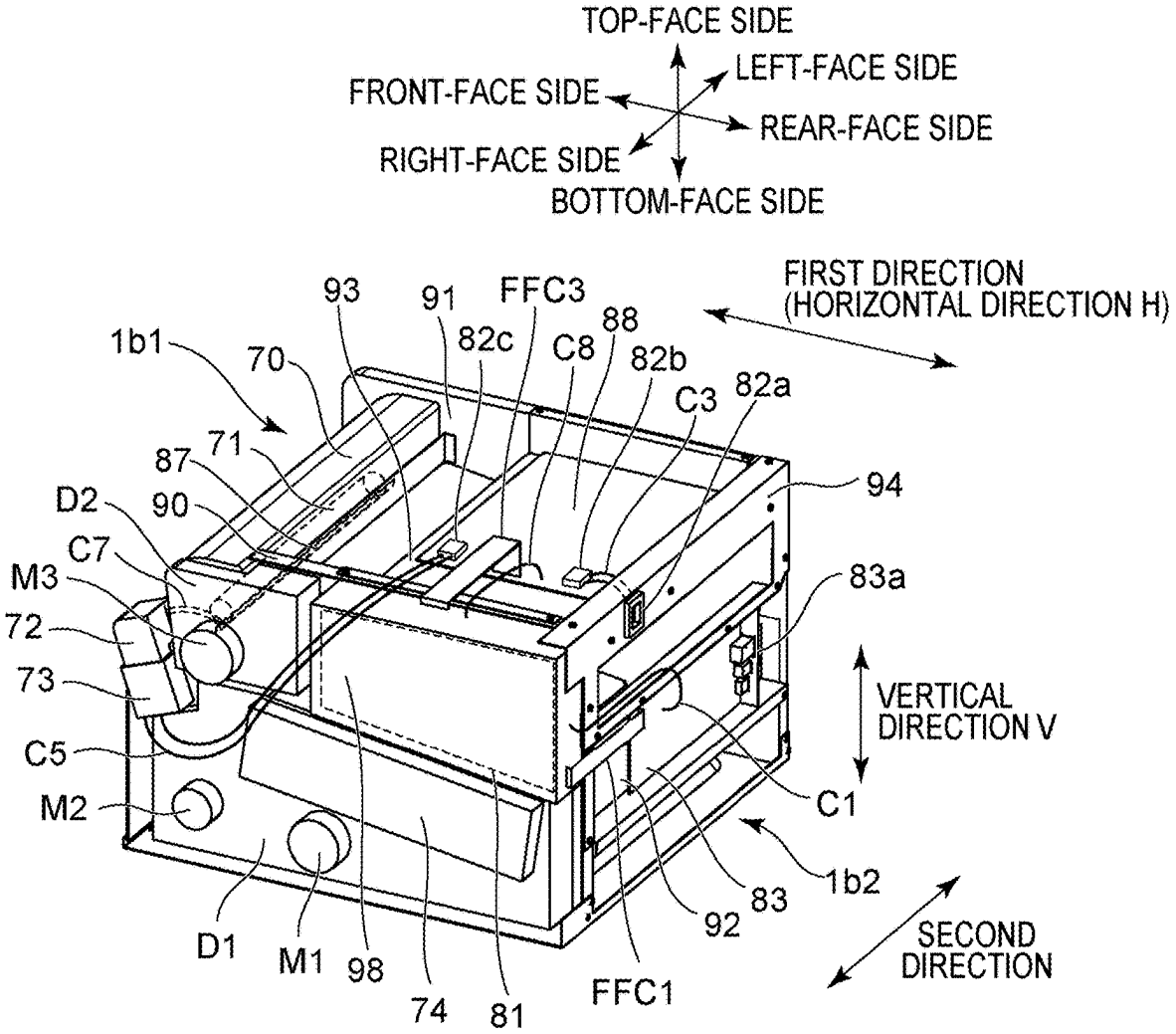
TOP-FACE SIDE
LEFT-FACE SIDE
FRONT-FACE SIDE
REAR-FACE SIDE
RIGHT-FACE SIDE
BOTTOM-FACE SIDE
FIRST DIRECTION
(HORIZONTAL DIRECTION H)
93
91
FFC3
88
82c
C8
82b
C3
82a
1b1
70
71
87
90
D2
C7
M3
72
73
C5
M2
94
83a
VERTICAL
DIRECTION V
C1
1b2
83
92
SECOND
DIRECTION
D1
M1
98
74
81
FFC1

FIG. 17

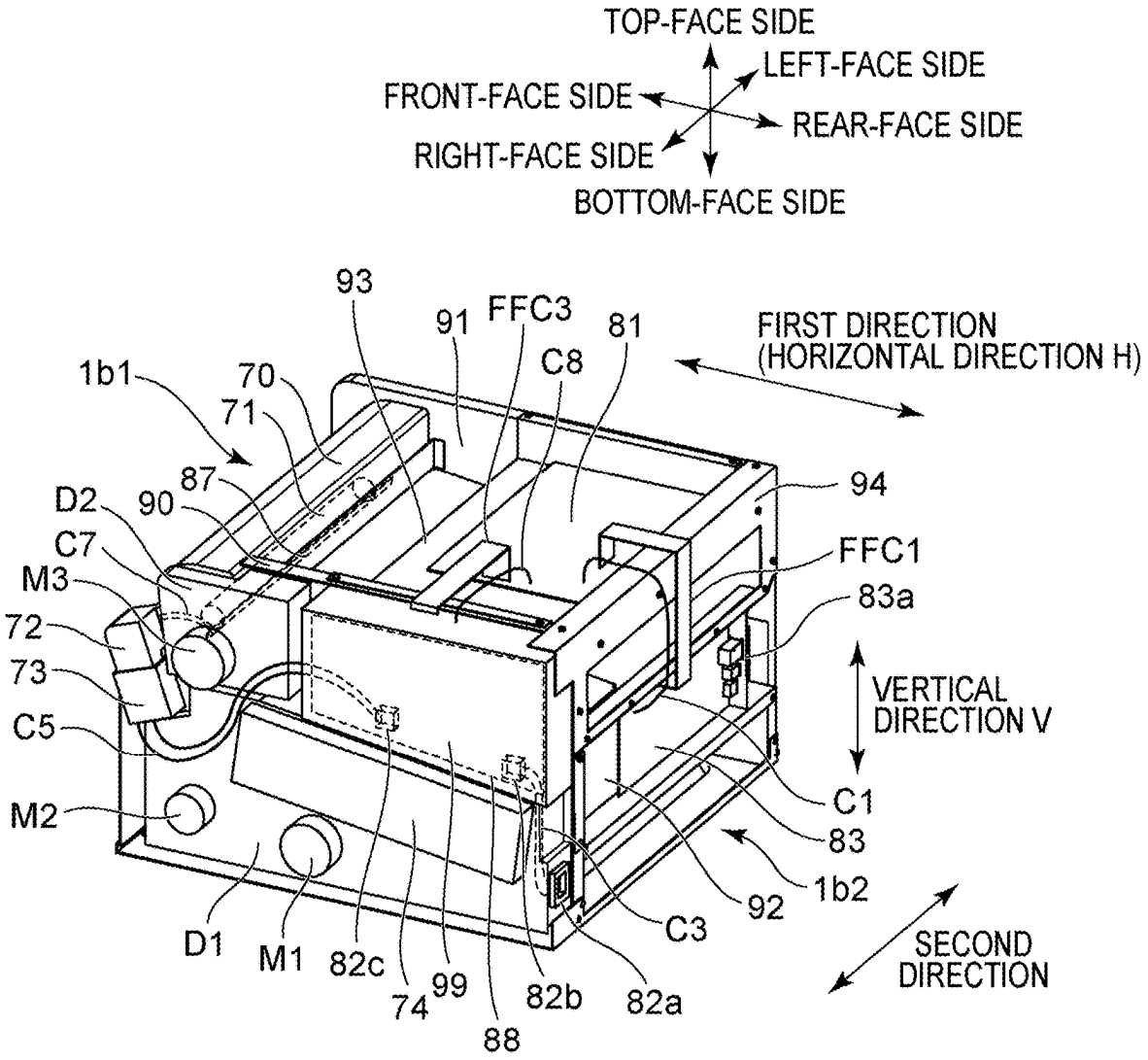
TOP-FACE SIDE
LEFT-FACE SIDE
FRONT-FACE SIDE
REAR-FACE SIDE
RIGHT-FACE SIDE
BOTTOM-FACE SIDE
FIRST DIRECTION
(HORIZONTAL DIRECTION H)
VERTICAL
DIRECTION V
SECOND
DIRECTION
93
91
FFC3
81
C8
1b1
70
71
87
90
D2
C7
M3
72
73
C5
M2
94
FFC1
83a
C1
83
1b2
92
C3
82a
82b
88
99
74
82c
M1
D1

FIG. 18

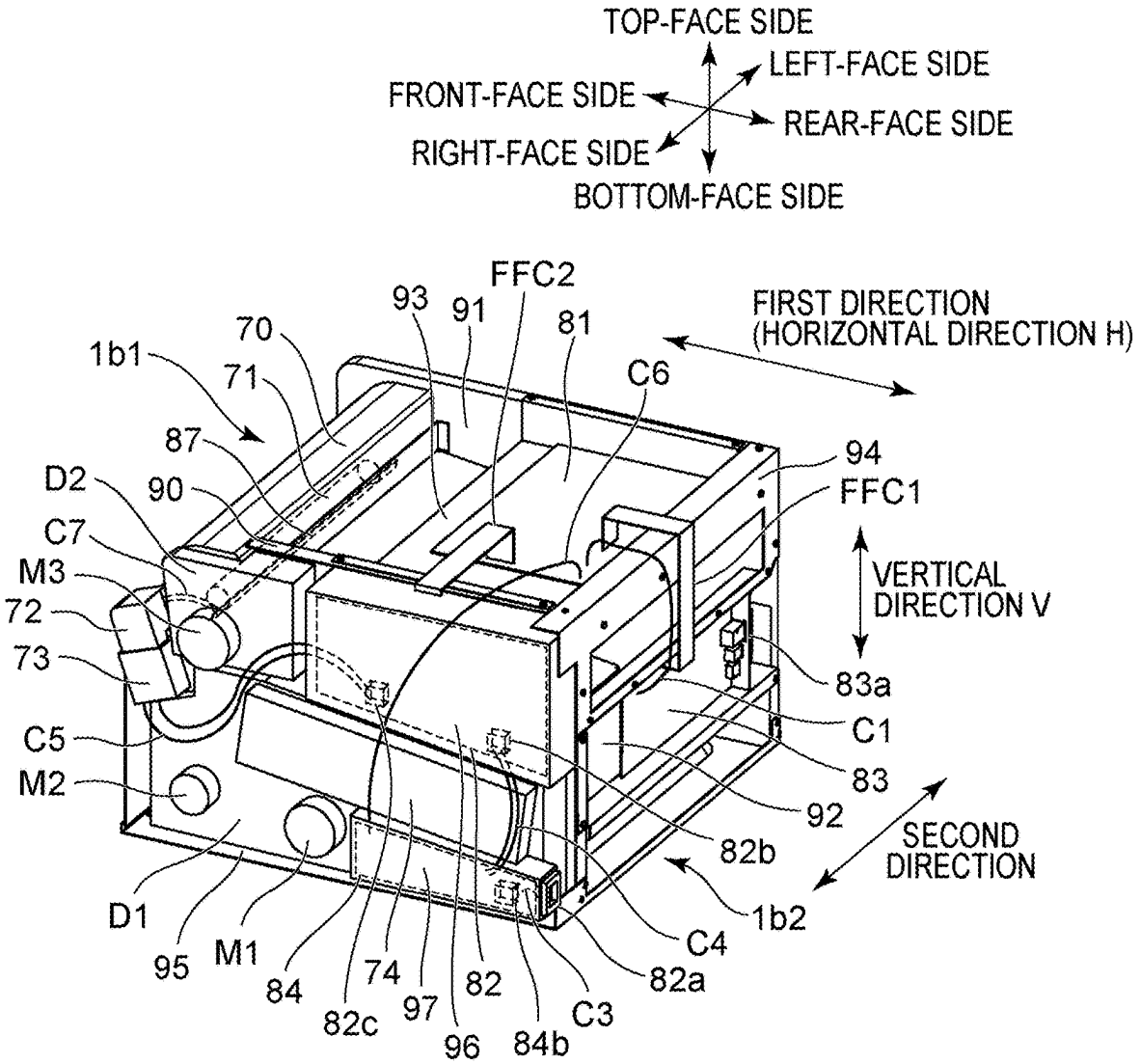
TOP-FACE SIDE
LEFT-FACE SIDE
FRONT-FACE SIDE
REAR-FACE SIDE
RIGHT-FACE SIDE
BOTTOM-FACE SIDE
FIRST DIRECTION
(HORIZONTAL DIRECTION H)
VERTICAL
DIRECTION V
SECOND
DIRECTION
FFC2
93
91
81
70
1b1
71
C6
87
94
D2
90
FFC1
C7
M3
72
73
83a
C1
C5
83
M2
92
82b
1b2
D1
C4
95
M1
84
74
82
82a
82c
97
C3
96
84b

FIG. 19

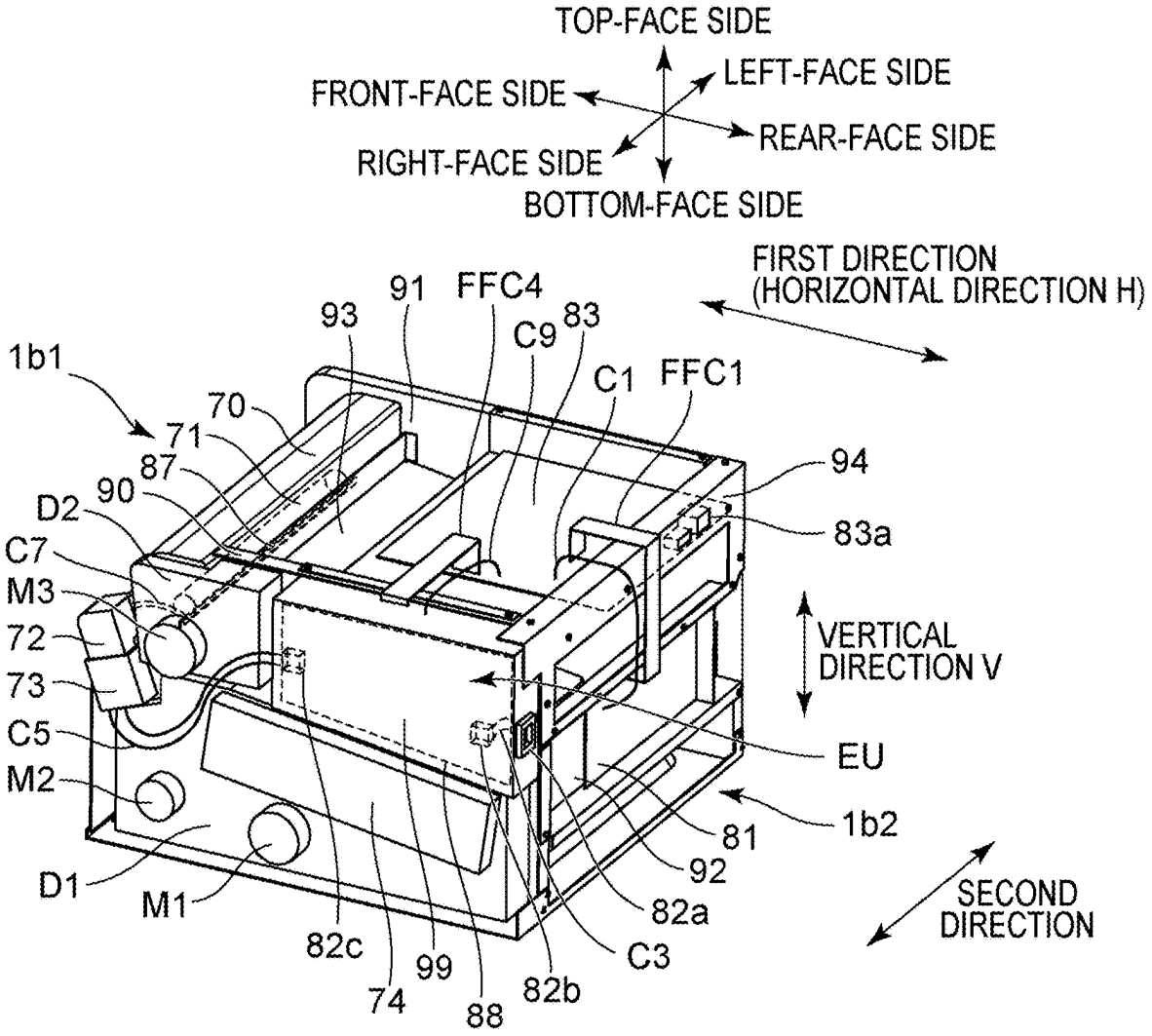
TOP-FACE SIDE
LEFT-FACE SIDE
FRONT-FACE SIDE
REAR-FACE SIDE
RIGHT-FACE SIDE
BOTTOM-FACE SIDE
FIRST DIRECTION
(HORIZONTAL DIRECTION H)
1b1
93
91
FFC4
C9
83
C1
FFC1
70
71
87
90
D2
C7
M3
72
73
C5
M2
D1
M1
94
83a
VERTICAL
DIRECTION V
EU
1b2
81
92
82a
C3
82b
88
99
74
82c
SECOND
DIRECTION

FIG. 20

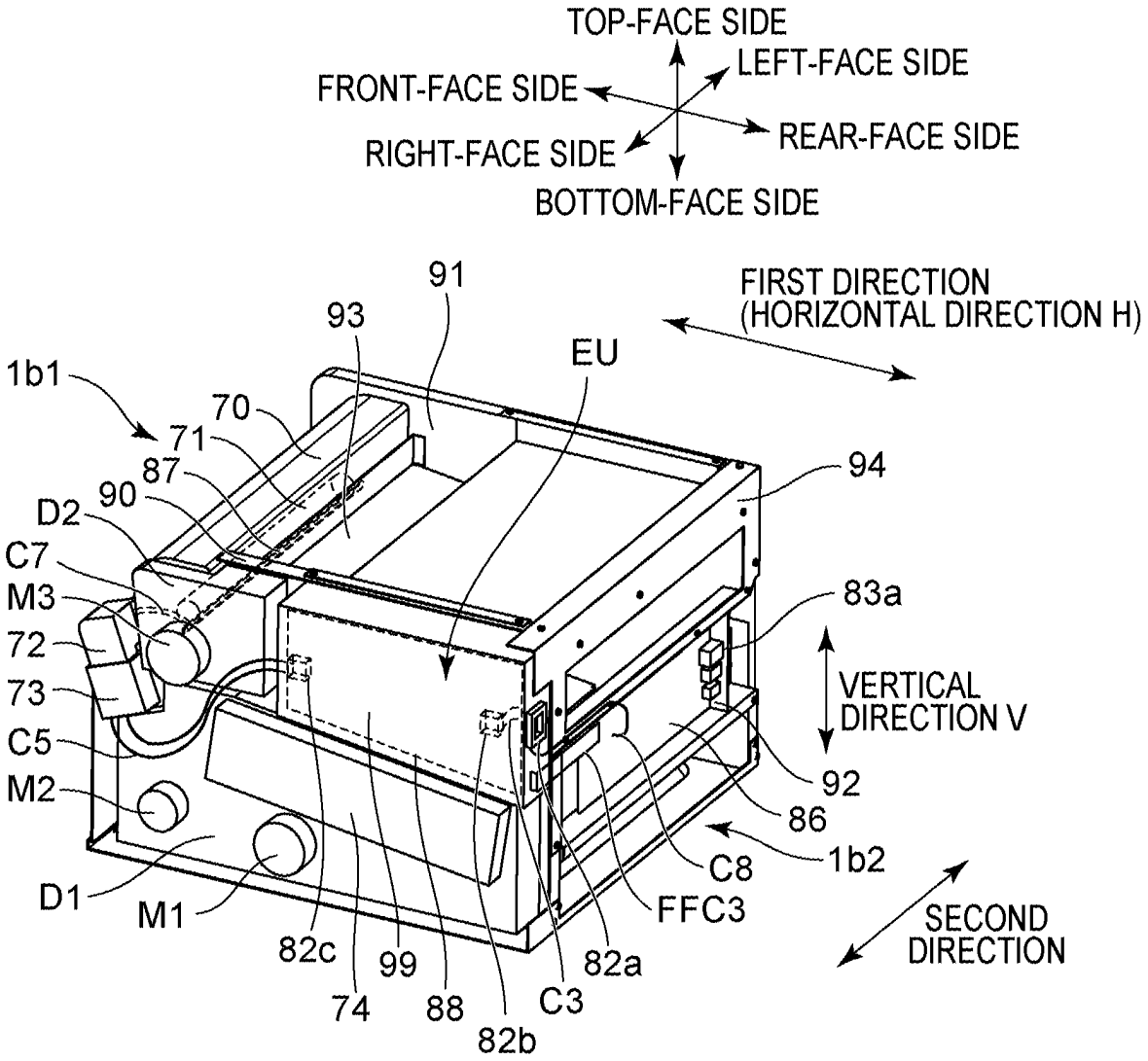
TOP-FACE SIDE
LEFT-FACE SIDE
FRONT-FACE SIDE
REAR-FACE SIDE
RIGHT-FACE SIDE
BOTTOM-FACE SIDE
FIRST DIRECTION
(HORIZONTAL DIRECTION H)
91
93
EU
1b1
70
71
87
90
D2
C7
M3
72
73
C5
M2
D1
M1
94
83a
VERTICAL
DIRECTION V
92
86
1b2
C8
FFC3
SECOND
DIRECTION
82c
99
74
88
82b
C3
82a

FIG. 21

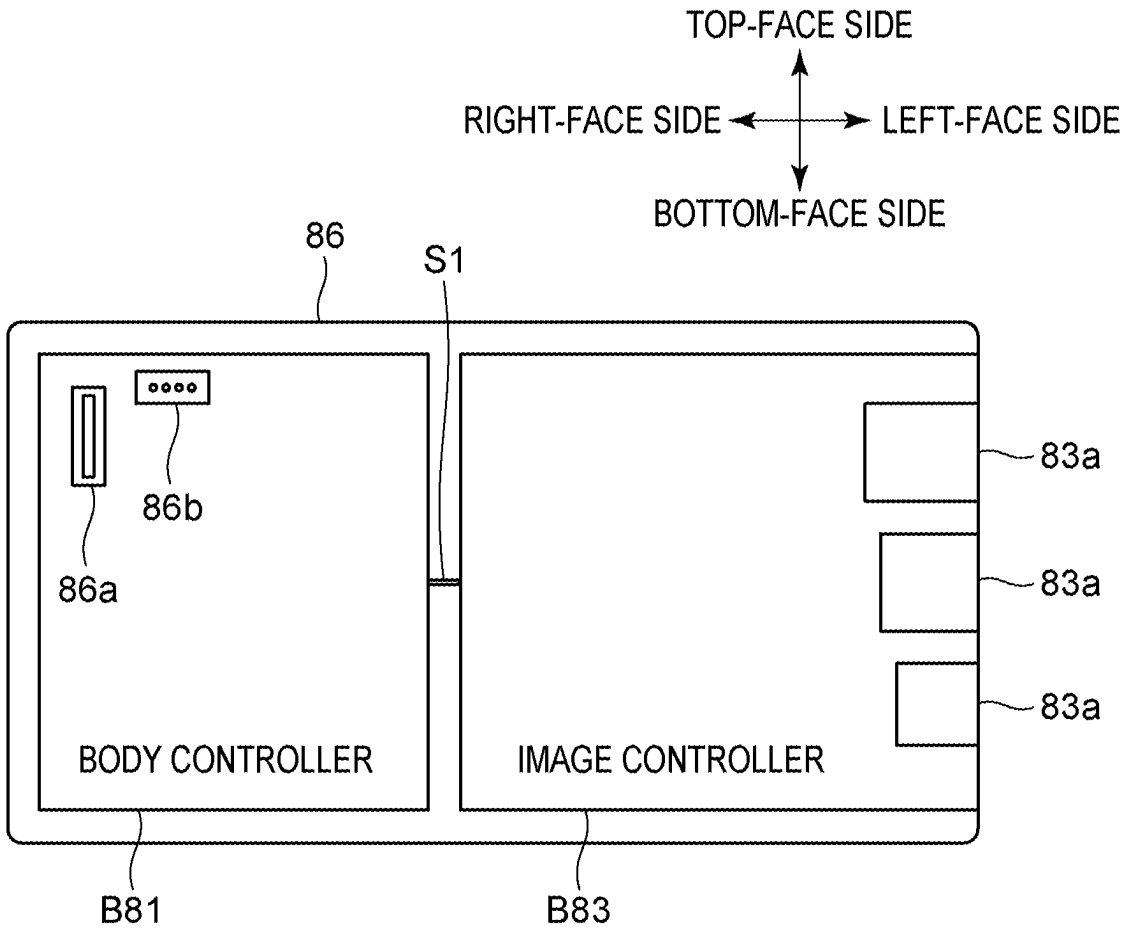
TOP-FACE SIDE
RIGHT-FACE SIDE
LEFT-FACE SIDE
BOTTOM-FACE SIDE
86
S1
86b
86a
83a
83a
83a
BODY CONTROLLER
IMAGE CONTROLLER
B81
B83

FIG. 22

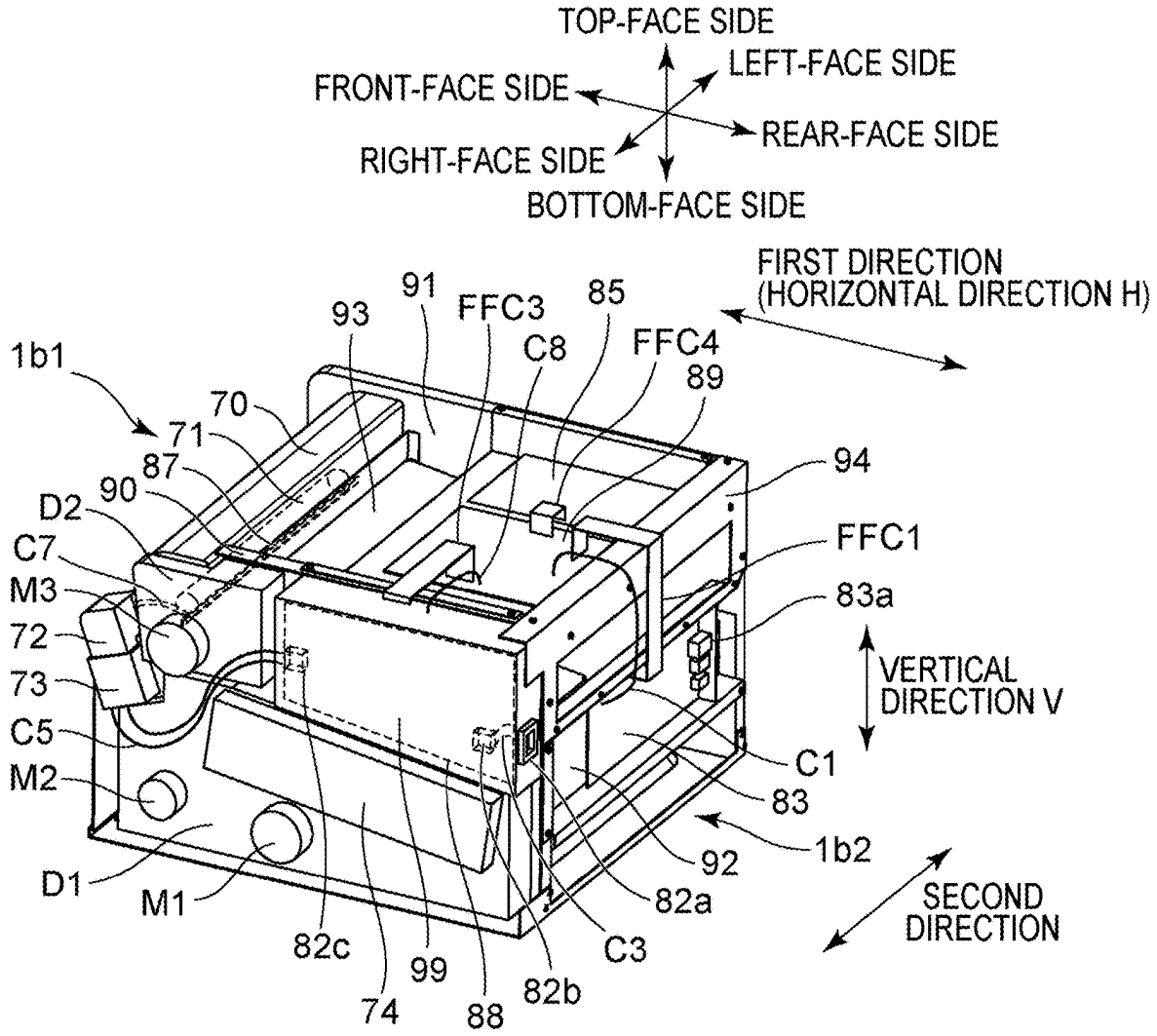
TOP-FACE SIDE
LEFT-FACE SIDE
FRONT-FACE SIDE
REAR-FACE SIDE
RIGHT-FACE SIDE
BOTTOM-FACE SIDE
FIRST DIRECTION
(HORIZONTAL DIRECTION H)
1b1
93
91
FFC3
85
C8
FFC4
89
70
71
87
90
D2
C7
M3
72
73
C5
M2
D1
M1
82c
74
99
88
82b
C3
82a
92
83
C1
1b2
94
FFC1
83a
VERTICAL
DIRECTION V
SECOND
DIRECTION

FIG. 23A

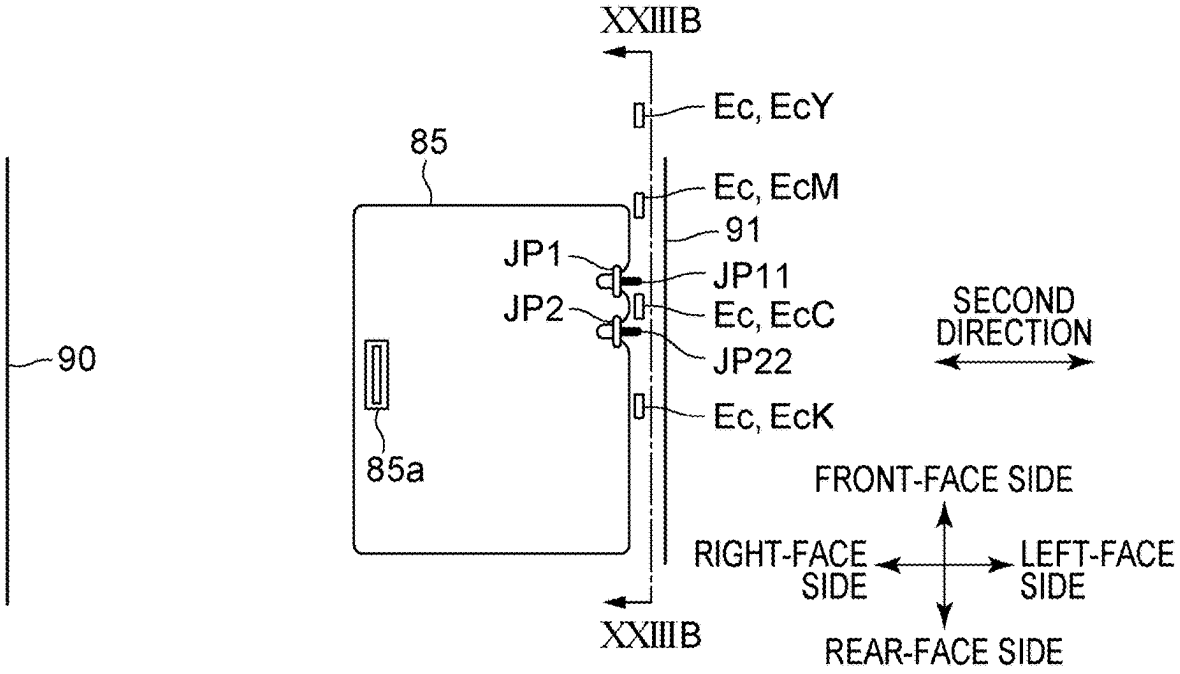

FIG. 23B

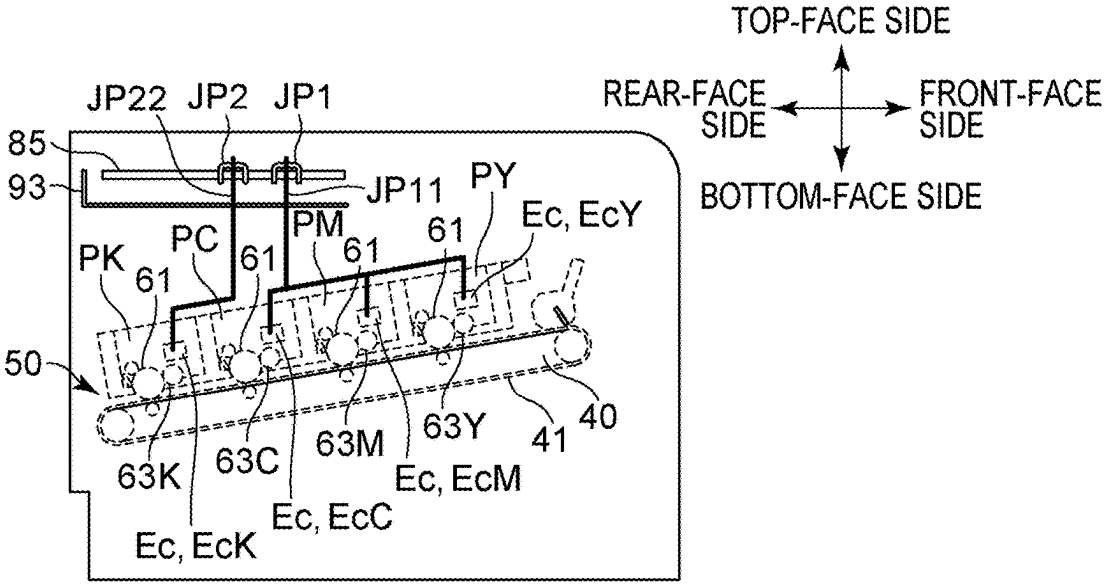

IMAGE FORMING APPARATUS

BACKGROUND

Field

[0001] The present disclosure relates to an image forming apparatus configured to form an image on a recording material.

Description of the Related Art

[0002] Image forming apparatuses such as printers, copiers, and multifunction machines include an apparatus in which a cartridge is detachably attached to a tray that is movable between the inside and the outside of the body of the apparatus.

[0003] An image forming apparatus disclosed in Japanese Patent Laid-Open No. 2010-244018 includes a tray to which cartridges are detachably attached, and a fixing device. The tray is movable to the outside of the body of the image forming apparatus through a plurality of openings.

[0004] Another image forming apparatus disclosed in Japanese Patent Laid-Open No. 2015-206897 includes a tray to which cartridges are detachably attached, a transfer unit, and a fixing device. According to Japanese Patent Laid-Open No. 2015-206897, the tray and the transfer unit are movable from the inside of the image forming apparatus to the outside of the image forming apparatus. Specifically, the fixing device is located on a one-end side of the body of the image forming apparatus. When the transfer unit moves to the outside of the apparatus body, the transfer unit travels in a direction from an other-end side of the apparatus body toward the one-end side. When the tray moves to the outside of the apparatus body, the tray travels in a direction from the one-end side of the apparatus body toward the other-end side.

[0005] Yet another image forming apparatus disclosed in Japanese Patent Laid-Open No. 2016-20932 includes a tray to which cartridges are detachably attached, and a power source.

SUMMARY

[0006] The present disclosure further develops the known arts. Specifically, the present disclosure provides an image forming apparatus in which electric components are arranged in a reduced space.

[0007] Various features of the disclosure according to the present application are characterized as follows.

[0008] According to a first aspect of the present disclosure, an image forming apparatus is configured to form an image on a recording material. The image forming apparatus includes an apparatus body including a first end portion and a second end portion with respect to a first direction that is orthogonal to a vertical direction, the first end portion having an opening, the second end portion being located opposite the first end portion, the apparatus body including a first side wall located at one end of the apparatus body in a second direction that is orthogonal to the vertical direction and to the first direction; a drawable unit movable relative to the first side wall in a direction intersecting the second direction, the drawable unit being movable between an inside position that is inside the apparatus body and an outside position that is outside the apparatus body through the opening; a fixing device configured to heat the recording material and located closer to the first end portion than to the second end portion in the first direction; a power source board configured to supply electrical power to the fixing device; and an inlet electrically connected to the power source board and located closer to the second end portion than to the first end portion in the first direction. In the first direction, at least part of the power source board is located closer to the second end portion than the fixing device is to the second end portion, and closer to the first end portion than the inlet is to the first end portion.

[0009] According to a second aspect of the present disclosure, an image forming apparatus is configured to form an image on a recording material. The image forming apparatus includes an apparatus body including a first end portion and a second end portion with respect to a first direction that is orthogonal to a vertical direction, the first end portion having an opening, the second end portion being located opposite the first end portion, the apparatus body including a first side wall; a second side wall; a rear wall; and an upper wall, the first side wall being located at one end of the apparatus body in a second direction that is orthogonal to the vertical direction and to the first direction, the second side wall being located at the other end of the apparatus body in the second direction, the rear wall being located at the second end portion, at least part of the rear wall being located between the first side wall and the second side wall in the second direction, at least part of the upper wall being located between the first side wall and the second side wall in the second direction; a drawable unit movable relative to the first side wall in a direction intersecting the second direction, the drawable unit being movable between an inside position that is inside the apparatus body and an outside position that is outside the apparatus body through the opening, at least part of the drawable unit that is in the inside position being located below the upper wall; a fixing device configured to heat the recording material and located closer to the first end portion than to the second end portion in the first direction; a power source board provided on the first side wall; and a first electric board provided on the rear wall or the upper wall.

[0010] According to a third aspect of the present disclosure, an image forming apparatus is configured to form an image on a recording material. The image forming apparatus includes an apparatus body including a first end portion and a second end portion with respect to a first direction that is orthogonal to a vertical direction, the second end portion being located opposite the first end portion, the apparatus body including a first side wall located at one end of the apparatus body in a second direction that is orthogonal to the vertical direction and to the first direction; an image forming unit configured to transfer an image to a recording material at a transfer portion, the image forming unit including a drawable unit movable between an inside position that is inside the apparatus body and an outside position that is outside the apparatus body, the drawable unit including a plurality of rotary bodies including a first rotary body and a second rotary body, the transfer portion being located closer to the first end portion than to the second end portion in the first direction; a drive unit including a drive source and a drive train, the drive train being configured to transmit a driving force of the drive source to each of the first rotary body and the second rotary body, the drive unit being provided on the first side wall; a fixing device configured to heat the recording material and located closer to the first end

portion than to the second end portion in the first direction; and a power source unit provided on the first side wall, the power source unit including a power source board and a casing that houses the power source board. When the drawable unit is in the inside position, the first rotary body is located closer to the first end portion than the second rotary body is to the first end portion in the first direction, and at least part of the first rotary body is located higher than the second rotary body in the vertical direction. The power source unit is located above the drive unit in the vertical direction. As viewed in the vertical direction, the power source unit and the drive unit at least partially overlap each other.

[0011] According to a fourth aspect of the present disclosure, an image forming apparatus is configured to form an image on a recording material. The image forming apparatus includes an apparatus body including a first end portion and a second end portion with respect to a first direction that is orthogonal to a vertical direction, the first end portion having an opening, the second end portion being located opposite the first end portion, the apparatus body including a first side wall located at one end of the apparatus body in a second direction that is orthogonal to the vertical direction and to the first direction; a drawable unit movable relative to the first side wall in a direction intersecting the second direction, the drawable unit including a rotary body, the drawable unit being movable between an inside position that is inside the apparatus body and an outside position that is outside the apparatus body through the opening; a drive unit including a drive source and a drive train, the drive train being configured to transmit a driving force of the drive source to the rotary body, the drive unit being provided on the first side wall; a fixing device configured to heat the recording material and located closer to the first end portion than to the second end portion in the first direction; and a power source unit provided on the first side wall, the power source unit including a power source board and a casing that houses the power source board. Defining a direction of travel of the drawable unit moving from the inside position to the outside position as a drawing direction, the drawable unit that is in the inside position is inclined such that a downstream portion of the drawable unit in the drawing direction is located higher than an upstream portion of the drawable unit. The power source unit is located above the drive unit in the vertical direction. As viewed in the vertical direction, the power source unit and the drive unit at least partially overlap each other.

[0012] Further features of the present disclosure will become apparent from the following description of exemplary embodiments with reference to the attached drawings.

BRIEF DESCRIPTION OF THE DRAWINGS

[0013] FIG. **1** illustrates an overall configuration of a printer according to Example 1.

[0014] FIG. **2** illustrates the printer according to Example 1 with a door thereof open.

[0015] FIG. **3** illustrates the printer according to Example 1 with a fixing device thereof moved.

[0016] FIG. **4** illustrates the printer according to Example 1 with a transfer unit and a tray unit thereof drawn out.

[0017] FIG. **5** illustrates the printer according to Example 1 with the transfer unit solely drawn out.

[0018] FIG. **6** illustrates how the transfer unit and the tray unit move in Example 1.

[0019] FIG. **7** illustrates how the transfer unit and the tray unit move in Example 1.

[0020] FIG. **8** illustrates a coupling member that couples a tray of the tray unit and the transfer unit to each other in Example 1.

[0021] FIG. **9** illustrates the coupling member that couples the tray of the tray unit and the transfer unit to each other in Example 1.

[0022] FIG. **10** illustrates the coupling member that couples the tray of the tray unit and the transfer unit to each other in Example 1.

[0023] FIG. **11** illustrates the positions of electric components included in the printer according to Example 1.

[0024] FIG. **12** illustrates the positions of electric components included in the printer according to Example 1.

[0025] FIG. **13** illustrates the positions of the door and an inlet in Example 1.

[0026] FIG. **14** illustrates the position of a power source unit in Example 1.

[0027] FIG. **15** illustrates the position of the power source unit in Example 1.

[0028] FIG. **16** illustrates the positions of electric components included in a printer according to Example 2.

[0029] FIG. **17** illustrates the positions of electric components included in a printer according to Example 3.

[0030] FIG. **18** illustrates the positions of electric components included in a printer according to Example 4.

[0031] FIG. **19** illustrates the positions of electric components included in a printer according to Example 5.

[0032] FIG. **20** illustrates the positions of electric components included in a printer according to Example 6.

[0033] FIG. **21** illustrates a control board according to Example 6.

[0034] FIG. **22** illustrates the positions of electric components included in a printer according to Example 7.

[0035] FIGS. **23**A and **23**B illustrate how power is supplied to the tray unit.

DESCRIPTION OF THE EMBODIMENTS

[0036] Various exemplary embodiments, features, and aspects of the present disclosure will now be described in detail with specific examples and with reference to the drawings. The dimensions, materials, shapes, and relative positions of elements with respect to the following description of the embodiments are to be changed as appropriate with the configuration and relevant conditions of an apparatus to which the present disclosure is applied. That is, the scope of the present disclosure is not limited to the following embodiment.

Example 1

Overall Configuration

[0037] Referring to FIG. **1**, a printer **1** provided as an image forming apparatus will now be described. FIG. **1** illustrates an overall configuration of the printer **1** according to Example 1. In the present embodiment, the printer **1** is an electrophotographic color laser-beam printer configured to form an image on a sheet S, which corresponds to a recording material.

[0038] The printer **1** includes an apparatus body (housing) **1**A, a scanner (exposure device) **6**, and a door (opening-and-closing member) **20**. The door **20** is openable and

closable on the apparatus body **1**A. The printer **1** further includes a sheet feeder **30**, a transfer unit (transfer device) **40**, a tray unit (moving unit, supporting unit, or drawable unit) **50**, and a fixing device **70**. A combination of the apparatus body **1**A and the door **20** is also referred to as a main frame **100**. The main frame **100** includes exterior members of the printer **1**.

[0039] The apparatus body **1**A houses the scanner **6**, the sheet feeder **30**, the transfer unit **40**, the tray unit **50**, and the fixing device **70**.

[0040] The sheet feeder **30** includes a stacking tray (stacking cassette, or stacker) **31** and a feed roller (feeding roller) **32**. Sheets S as recording materials are stacked on the stacking tray **31** and are each conveyed from the stacking tray **31** by the feed roller **32**. The stacking tray **31** is drawable or movable toward the side of the door **20**, so that sheets S can be refilled. The stacking tray **31** includes an inner plate **33**, which is configured to lift the sheets S in such a manner as to bring the sheets S into contact with the feed roller **32**.

[0041] The tray unit **50** includes a tray (supporting member or drawer) **51** and cartridges PY, PM, PC, and PK. The tray **51** includes a tray handle **52**. The cartridges PY, PM, PC, and PK are detachably attached to the tray **51**.

[0042] The cartridges PY, PM, PC, and PK are individually attachable to and detachable from the tray **51**. The cartridges PY, PM, PC, and PK contain respective toners (developers) having respective colors of yellow (Y), magenta (M), cyan (C), and black (K). The cartridges PY, PM, PC, and PK have the same configuration except that the colors of the toners contained therein are different. Therefore, one of the cartridges PY, PM, PC, and PK may be taken in describing the configuration and operation thereof, and description of the others may occasionally be omitted. If the cartridges PY, PM, PC, and PK do not need to be distinguished from one another, the cartridges PY, PM, PC, and PK may each simply be referred to as a cartridge P. That is, it can also be expressed that the tray unit **50** includes a plurality of cartridges P and a tray **51**, to which the plurality of cartridges P are detachably attached.

[0043] In Example 1, the tray unit **50** includes a plurality of photoconductor drums (image carrying members) **61**, a plurality of charging rollers (charging members) **62**, and a plurality of developing rollers (developer carrying members) **63**. Specifically, the tray unit **50** includes four photoconductor drums **61**, four charging rollers **62**, and four developing rollers **63**. The direction of the rotation axes of the photoconductor drums **61**, the direction of the rotation axes of the developing rollers **63**, and the direction of the rotation axes of the charging rollers **62** are parallel to each other.

[0044] A unit configured to form a black (K) image is referred to as a black station (first station). The photoconductor drum **61**, the developing roller **63**, and the charging roller **62** of the first station are referred to as a first photoconductor drum, a first developing roller, and a first charging roller, respectively.

[0045] A unit configured to form a cyan (C) image is referred to as a cyan station (second station). The photoconductor drum **61**, the developing roller **63**, and the charging roller **62** of the second station are referred to as a second photoconductor drum, a second developing roller, and a second charging roller, respectively.

[0046] A unit configured to form a magenta (M) image is referred to as a magenta station (third station). The photoconductor drum **61**, the developing roller **63**, and the charging roller **62** of the third station are referred to as a third photoconductor drum, a third developing roller, and a third charging roller, respectively.

[0047] A unit configured to form a yellow (Y) image is referred to as a yellow station (fourth station). The photoconductor drum **61**, the developing roller **63**, and the charging roller **62** of the fourth station are referred to as a fourth photoconductor drum, a fourth developing roller, and a fourth charging roller, respectively.

[0048] The cartridge PK is attached to the black station. The cartridge PC is attached to the cyan station. The cartridge PM is attached to the magenta station. The cartridge PY is attached to the yellow station. In the present embodiment, the cartridge PK is referred to as a first cartridge, the cartridge PC is referred to as a second cartridge, the cartridge PM is referred to as a third cartridge, and the cartridge PY is referred to as a fourth cartridge.

[0049] In the present embodiment, the first photoconductor drum, the second photoconductor drum, the third photoconductor drum, and the fourth photoconductor drum may be regarded as an exemplary first rotary body, an exemplary second rotary body, an exemplary third rotary body, and an exemplary fourth rotary body, respectively. The first developing roller, the second developing roller, the third developing roller, and the fourth developing roller may also be regarded as an exemplary first rotary body, an exemplary second rotary body, an exemplary third rotary body, and an exemplary fourth rotary body, respectively. Accordingly, it can also be stated that the tray unit **50** includes a plurality of rotary bodies, and the plurality of rotary bodies include first to fourth rotary bodies.

[0050] The numbers of orders, that is, first; second; third; and fourth, are defined only for convenience of distinguishing elements and may be interchanged as appropriate.

[0051] The photoconductor drum **61**, the charging roller **62**, and the developing roller **63** may be included in at least one of each cartridge P and the tray **51**. In Example 1, the cartridge P includes the photoconductor drum **61**, the charging roller **62**, and the developing roller **63**.

[0052] The transfer unit **40** includes a belt (intermediate transfer belt) **41**, a driving roller **46**, primary transfer rollers **42**, a cleaner **43**, and a tension roller (driven roller) **47**. The driving roller **46** is to move the belt **41**. The printer **1** according to Example 1 includes an optical sensor **44**, which is configured to detect any toner image transferred to the belt **41**. In Example 1, the belt **41** is located below the photoconductor drums **61** and is allowed to come into contact with the photoconductor drums **61** such that primary transfer portions are formed between the belt **41** and the individual photoconductor drums **61**. The printer **1** further includes a secondary transfer roller **45**, which is in contact with the belt **41** such that a secondary transfer portion is formed. The secondary transfer portion is formed between the belt **41** and the secondary transfer roller **45**. The direction of the rotation axes of the primary transfer rollers **42**, the direction of the rotation axis of the driving roller **46**, the direction of the rotation axis of the tension roller **47**, and the direction of the rotation axis of the secondary transfer roller **45** are parallel to each other. At a position before the secondary transfer portion, a registration roller pair **4** is provided.

[0053] The fixing device **70** includes a fixing unit **70***b* and a flapper **5**. In an image forming operation that is performed on a sheet S, the fixing device **70** is in an in-use position. When in the in-use position, the fixing device **70** is housed in (located inside) the apparatus body **1**A. The fixing device **70** is configured to heat the sheet S when in the in-use position. In the present embodiment, the fixing unit **70***b* includes a heating part (heating roller) **71** and a pressing part (pressure roller) **77**. The heating part **71** includes a heater.

[0054] Referring to FIGS. **1** to **5**, how the transfer unit **40** and the tray unit **50** move will now be described. FIG. **2** illustrates the printer **1** with the door **20** open. FIG. **3** illustrates the printer **1** with the fixing device **70** moved. FIG. **4** illustrates the printer **1** with the transfer unit **40** and the tray unit **50** drawn out. FIG. **5** illustrates the printer **1** with the transfer unit **40** solely drawn out.

[0055] The transfer unit **40** and the tray unit **50** are movable from the inside of the apparatus body **1**A to the outside of the apparatus body **1**A. The apparatus body **1**A has a first end portion **1***b***1** and a second end portion **1***b***2**, which are with respect to a horizontal direction H. The first end portion **1***b***1** has an opening **1**A**1**. The second end portion **1***b***2** is located opposite the first end portion **1***b***1**. The tray unit **50** is movable through the opening **1**A**1** between a first inside position that is inside the apparatus body **1**A and a first outside position that is outside the apparatus body **1**A. The transfer unit **40** is movable through the opening **1**A**1** between a second inside position that is inside the apparatus body **1**A and a second outside position that is outside the apparatus body **1**A. The opening **1**A**1** may include an opening provided for the tray unit **50** to pass through and an opening provided for the transfer unit **40** to pass through. Along with the transfer unit **40** moving from the second inside position to the second outside position, at least the belt **41** is moved such that at least part of the belt **41** projects from the apparatus body **1**A to the outside of the apparatus body **1**A.

[0056] A direction in which the tray unit **50** moves from the first inside position to the first outside position is referred to as a tray detaching direction (first detaching direction) Dd**1**. A direction opposite to the tray detaching direction Dd**1** is referred to as a tray attaching direction (first attaching direction) Da**1**. The tray detaching direction Dd**1** can also be expressed as a direction heading from the second end portion **1***b***2** toward the first end portion **1***b***1**.

[0057] A direction in which the transfer unit **40** moves from the second inside position to the second outside position is referred to as a transfer detaching direction (second detaching direction) Dd**2**. A direction opposite to the transfer detaching direction Dd**2** is referred to as a transfer attaching direction (second attaching direction) Da**2**. In the transfer detaching direction Dd**2**, the driving roller **46** is located on the downstream side relative to the tension roller **47**. The transfer detaching direction Dd**2** can also be expressed as a direction heading from the second end portion **1***b***2** toward the first end portion **1***b***1**.

[0058] The tray detaching direction Dd**1** and the tray attaching direction Da**1** are each a direction intersecting (preferably orthogonal to) the direction of the rotation axes of the photoconductor drums **61**. The transfer detaching direction Dd**2** and the transfer attaching direction Da**2** are each a direction intersecting (preferably orthogonal to) the direction of the rotation axis of the driving roller **46**. The direction of the rotation axis of the driving roller **46** is parallel to the direction of the rotation axes of the photoconductor drums **61**.

[0059] In the horizontal direction H, the fixing device **70** is located on a one-end or first side (the side on which the first end portion **1***b***1** is located) of the apparatus body **1**A.

[0060] The door **20** attached to the apparatus body **1**A is movable between a closed position and an open position. When the door **20** is in the closed position (in a closed state of the door **20**) as illustrated in FIG. **1**, the door **20** covers the opening **1**A**1**. When the door **20** is in the open position (in an open state of the door **20**) as illustrated in FIG. **2**, the opening **1**A**1** is exposed.

[0061] When the door **20** is in the closed position as illustrated in FIG. **1**, the door **20** covers the fixing device **70** attached to the apparatus body **1**A. More specifically, when the door **20** is in the closed position, an upper cover portion **20***b* included in the door **20** is located above the fixing device **70**. The upper cover portion **20***b* of the door **20** has a function as one of the exterior members.

[0062] The door **20** is movable between the open position and the closed position with the fixing device **70** supported by the apparatus body **1**A. More specifically, the door **20** moves from the closed position to the open position in such a manner as to move away from the fixing device **70** supported by the apparatus body **1**A. In other words, the door **20** that is in the open position as illustrated in FIG. **2** is located away from the fixing device **70** supported by the apparatus body **1**A.

[0063] As will be described below, the fixing device **70** is movable from the position illustrated in FIG. **2** to the position illustrated in FIG. **3** such that the opening **1**A**1** is widely exposed. With the door **20** and the fixing device **70** moved (as illustrated in FIG. **3**), the transfer unit **40** and the tray unit **50** are allowed to move from the inside of the apparatus body **1**A to the outside of the apparatus body **1**A through the opening **1**A**1**. The transfer unit **40** and the tray unit **50** thus moved are positioned as illustrated in FIG. **4**.

[0064] With the tray unit **50** moved to the outside of the apparatus body **1**A (as illustrated in FIG. **4**), the cartridges PY, PM, PC, and PK are allowed to be detached from the tray **51** and to be attached to the tray **51**. Therefore, the user is allowed to replace the cartridges PY, PM, PC, and PK with fresh cartridges PY, PM, PC, and PK. In Example 1, the cartridges P are attachable to and detachable from the tray **51** in a direction intersecting (preferably orthogonal to) the rotation axes of the photoconductor drums **61**.

[0065] The cartridges PY, PM, PC, and PK are to be detached from the tray **51** by being moved relative to the tray **51** in a direction away from the transfer unit **40**. In other words, to detach the cartridges PY, PM, PC, and PK from the tray **51**, the cartridges PY, PM, PC, and PK are moved relative to the tray **51** toward a side opposite the transfer unit **40**. In the present embodiment, the transfer unit **40** is located below the tray unit **50**. Therefore, the cartridges PY, PM, PC, and PK to be detached from the tray **51** are moved upward relative to the tray **51**.

[0066] The transfer unit **40** is detachable from the apparatus body **1**A independently of the tray unit **50** and is replaceable with a fresh transfer unit **40**.

Image Forming Operation

[0067] Referring to FIG. **1**, the image forming operation that is performed by the printer **1** will now be described. The

printer **1** is connected to an external host device (external instrument, or external device) **400**. In a case where the printer **1** receives an image signal from the external host device **400**, the printer **1** is configured to start an image forming operation that is performed on a sheet S based on the received image signal. Examples of the external host device **400** include a personal computer, an image reader, and a facsimile.

[0068] In the image forming operation that is performed on a sheet S, the fixing device **70** is in the in-use position, the tray unit **50** is in the first inside position, the transfer unit **40** is in the second inside position, and the door **20** is in the closed position. With the transfer unit **40** being in the second inside position, the belt **41** is allowed to make contact with the photoconductor drums **61**. In such a state, the tray unit **50** is located above the transfer unit **40**.

[0069] A charging voltage is applied to the charging rollers **62**, and the photoconductor drums **61** are rotated. The scanner **6** applies laser beams generated in correspondence with image information respectively to the photoconductor drums **61**, whereby the surfaces of the photoconductor drums **61** that are precharged by the respective charging rollers **62** are exposed to the laser beams. Thus, electrostatic latent images corresponding to the image information are formed on the surfaces of the respective photoconductor drums **61**.

[0070] The developing rollers **63** carry the respective toners. A developing voltage is applied to the developing rollers **63**, whereby the electrostatic latent images formed on the photoconductor drums **61** are developed with the toners supplied from the developing rollers **63**. Thus, respective toner images are formed on the surfaces of the photoconductor drums **61**. In Example 1, the development of the electrostatic latent images is performed with the developing rollers **63** being in contact with the photoconductor drums **61**. Alternatively, the development of the electrostatic latent images by using the developing rollers **63** may be performed with gaps produced between the developing rollers **63** and the photoconductor drums **61**.

[0071] If a full-color image is to be formed, toner images in the respective colors are formed on the respective photoconductor drums **61**.

[0072] In Example 1, with the tray unit **50** being in the first inside position, the developing rollers **63** are movable between a contact position where the developing rollers **63** are in contact with the photoconductor drums **61** and an away position where the developing rollers **63** are away from or not in contact with the photoconductor drums **61**. Specifically, the state of the developing rollers **63** is changed by a changing device provided in the apparatus body **1**A between a state where the developing rollers **63** are in the contact position and a state where the developing rollers **63** are in the away position or a non-contact position. Hence, when no image forming operation is to be performed, the developing rollers **63** are kept away from or not in contact with the photoconductor drums **61**.

[0073] The printer **1** is capable of performing monochrome printing with the developing roller **63** for the cartridge PK being in contact with the corresponding photoconductor drum **61** but with the developing rollers **63** for the cartridges PY, PM and PC being away from the corresponding photoconductor drums **61**. The printer **1** is capable of performing a full-color printing with the photoconductor drums **61** for the cartridges PY, PM, PC, and PK being in contact with the belt **41**.

[0074] The toner images formed on the respective photoconductor drums **61** are transferred to the belt **41** at the respective primary transfer portions by the respective primary transfer rollers **42**, and the toner images are conveyed to the secondary transfer portion formed between the belt **41** and the secondary transfer roller **45**.

[0075] On the other hand, a conveyance path (first path or first conveyance path) **1***c* runs inside the apparatus body **1**A. The sheet S heading toward the fixing device **70** is conveyed along the conveyance path **1***c*. Furthermore, a duplex conveyance path (second path or second conveyance path) **20***a* runs inside the door **20**. The sheet S exited from the fixing device **70** is conveyed along the conveyance path **20***a*. The door **20** when closed covers the conveyance path **1***c*. When the door **20** is open, the conveyance path **1***c* and the duplex conveyance path **20***a* are exposed (see FIG. **2**).

[0076] In the sheet feeder **30**, the feed roller **32** separates one sheet S from the stack of sheets S in the stacking tray **31** at a predetermined timing. Any skew in the one sheet S is corrected by the registration roller pair **4**. The sheet S is then conveyed along the conveyance path **1***c* to the secondary transfer portion and further to the fixing device **70**.

[0077] At the secondary transfer portion, the toner image is transferred from the belt **41** to the sheet S. Toner particles not transferred to the sheet S are removed from the belt **41** by a cleaning blade (cleaning member) **43**A, which is included in the cleaner **43**.

[0078] It can also be stated that the printer **1** includes an image forming unit (image forming section) configured to form an image on a sheet S at a transfer portion (secondary transfer portion). In the present embodiment, the image forming unit includes the tray unit **50** and the transfer unit **40**. In the horizontal direction H, the secondary transfer portion is located closer to the first end portion **1***b***1** than to the second end portion **1***b***2**.

[0079] The sheet S having the toner image transferred thereto at the secondary transfer portion is conveyed toward the fixing device **70**. In the fixing device **70**, the sheet S is heated and pressed by the fixing unit **70***b*, whereby the toner image is fixed to the sheet S. The sheet S having the fixed toner image is conveyed to the flapper **5**, which serves as a path changer.

[0080] The flapper **5** is movable between a sheet discharge position and a sheet reversal position. In the sheet discharge position, the flapper **5** guides the sheet S, exited from the fixing device **70**, toward a sheet discharge path **1***d*. In the sheet reversal position, the flapper **5** guides the sheet S to a sheet reversal path **1***e*.

[0081] In simplex printing in which an image is formed on the front side of the sheet S, the flapper **5** guides the sheet S to the sheet discharge path **1***d* so that the sheet S is discharged to a discharge tray **1***f*, which is provided at an upper part of the apparatus body **1**A.

[0082] In duplex printing in which an image is formed on both of the front and back sides of the sheet S, the flapper **5** guides the sheet S to the sheet reversal path **1***e*. After the sheet S is guided to the sheet reversal path **1***e*, the direction of conveyance of the sheet S is reversed. Accordingly, the sheet S advances along the duplex conveyance path **20***a* running inside the door **20** and is conveyed toward the secondary transfer portion. At the secondary transfer por-

tion, a toner image is transferred to the back side of the sheet S. Then, the sheet S advances through the fixing device **70**, is guided by the flapper **5** to the sheet discharge path **1***d*, and is discharged to the discharge tray **1***f* provided on the apparatus body **1**A.

How to Detach Tray Unit and Transfer Unit, and Location of Fixing Device

[0083] Referring to FIGS. **1** to **5**, how to detach the tray unit **50** and the transfer unit **40** from the apparatus body **1**A and the location of the fixing device **70** will now be described.

[0084] As described above, the fixing device **70** of the printer **1** is located on the one-end or first side of the apparatus body **1**A in the horizontal direction H. Furthermore, the transfer unit **40** and the tray unit **50** are movable to the outside of the apparatus body **1**A through the opening **1**A**1** provided on the one-end or first side of the apparatus body **1**A.

[0085] In other words, the fixing device **70** is located closer in the horizontal direction H to the first end portion **1***b***1** than to the second end portion **1***b***2**. That is, in the horizontal direction H, the distance between the fixing device **70** and the first end portion **1***b***1** is shorter than the distance between the fixing device **70** and the second end portion **1***b***2**. It can also be stated that the fixing device **70** is located closer to the first end portion **1***b***1** than to the center of the apparatus body **1**A in the horizontal direction H, and that, in the horizontal direction H, the distance between the first end portion **1***b***1** and the fixing device **70** is shorter than the distance between the first end portion **1***b***1** and the center of the apparatus body **1**A.

[0086] As described above, the direction of travel of the tray unit **50** moving from the first inside position to the first outside position intersects the rotation axes of the photoconductor drums **61**. In such a movement, the tray unit **50** travels away from the second end portion **1***b***2**.

[0087] As described above, the direction of travel of the transfer unit **40** moving from the second inside position to the second outside position intersects the rotation axis of the driving roller **46**. In such a movement, the transfer unit **40** travels away from the second end portion **1***b***2**.

[0088] As described above, the door **20** according to Example 1 when closed covers the opening **1**A**1** and also covers at least part of the conveyance path **1***c* provided for the sheet S. The door **20** has the duplex conveyance path **20***a*.

[0089] If a sheet S is jammed, the user of the printer **1** is allowed to eliminate the jam by removing the sheet S from the one-end or first side of the apparatus body **1**A. Specifically, the user moves the door **20** to the open position and accesses the inside of the apparatus body **1**A. Thus, the user is allowed to remove the jammed sheet S. If a portion of the sheet S exited from the fixing device **70** is exposed to the outside of the apparatus body **1**A, the user may remove the sheet S by pulling the sheet S from the outside of the apparatus body **1**A without opening the door **20**.

[0090] The user of the printer **1** is also allowed to check the states of the transfer unit **40** and the cartridges P and to perform maintenance work, replacement work, and the like by moving the transfer unit **40** and the tray unit **50** to the outside of the apparatus body **1**A on the one-end or first side of the apparatus body **1**A.

[0091] That is, in the printer **1**, while the fixing device **70** is located on the one-end or first side of the apparatus body **1**A, the transfer unit **40** and the tray unit **50** are movable between the inside and the outside of the apparatus body **1**A on the one-end or first side of the apparatus body **1**A. Hence, the elimination of the jam, the access to the fixing device **70**, and the operation of the transfer unit **40** and the tray unit **50** that are to be performed by the user are all performable on the first side.

[0092] In the present embodiment, the side of the printer **1** on which the door **20** is provided is defined as the front side. Therefore, it is sufficient that a space for performing relevant work, such as the elimination of the jam and the operation of the transfer unit **40** and the tray unit **50**, is provided on the front side of the printer **1**. That is, a space for performing such work does not need to be provided on the left side, the right side, the rear side, and the upper side of the printer **1**. Hence, the space to be secured for installing the printer **1** is reduced.

[0093] If the transfer unit **40** or the tray unit **50** is configured to be drawn out of or moved from the apparatus body **1**A on the other-end or second side, the user who attempts to eliminate the jam or to draw out the transfer unit **40** or the tray unit **50** needs to access both of the first and second sides of the apparatus body **1**A. Furthermore, if one of the transfer unit **40** and the tray unit **50** is configured to be drawn out of or moved from the apparatus body **1**A on the one-end or first side while the other of the transfer unit **40** and the tray unit **50** is configured to be drawn out of the apparatus body **1**A on the other-end or second side, the user needs to access both of the first and second sides of the apparatus body **1**A. In such a configuration, a space for performing the above work needs to be provided not only on the front side of the apparatus body **1**A but also on the rear side of the apparatus body **1**A, leading to an increase in the area to be secured for installing the printer **1**.

[0094] In Example 1, the refilling of sheets S is performable on the one-end or first side of the apparatus body **1**A. Therefore, it is sufficient that a space for refilling sheets S is provided on the front side of the printer **1**. Hence, the space to be secured for installing the printer **1** is reduced.

Relationship Between Tray Unit and Fixing Device

[0095] Referring to FIGS. **1** to **4**, **6**, and **7**, the relationship between the tray unit **50** and the fixing device **70** will now be described. FIGS. **6** and **7** illustrate how the transfer unit **40** and the tray unit **50** move.

[0096] When the tray unit **50** moves between the first inside position where an image forming operation is performed on a sheet S and the first outside position where the cartridges P are allowed to be replaced, the tray unit **50** travels through a predetermined space.

[0097] The space through which the tray unit **50** travels when moving from the first inside position to the first outside position is referred to as a first space (a traveling space for the tray unit **50**). The first space may also be referred to as a path or locus (first traveling path or first traveling locus) along which the tray unit **50** travels when moving from the first inside position to the first outside position.

[0098] When the transfer unit **40** moves between the second inside position where an image forming operation is performed on a sheet S and the second outside position, the transfer unit **40** travels through a predetermined space. The space through which the transfer unit **40** travels when

moving from the second inside position to the second outside position is referred to as a second space (a traveling space for the transfer unit **40**). The second space may also be referred to as a path or locus (second traveling path or second traveling locus) along which the transfer unit **40** travels when moving from the second inside position to the second outside position.

[0099] The position (in-use position) of the fixing device **70** that is taken when an image forming operation is to be performed on a sheet S has the following relationship with the first space and the second space.

[0100] As illustrated in FIGS. **6** and **7**, at least part of the fixing device **70** that is in the in-use position overlaps the first space. In other words, when the fixing device **70** is in the in-use position, at least part of the fixing device **70** is located inside the first space.

[0101] In Example 1, at least part of the fixing device **70** overlaps the space through which the cartridges P are to travel along with the tray unit **50** moving from the first inside position to the first outside position. Alternatively, at least part of the fixing device **70** may overlap a space through which the tray **51** travels.

[0102] In such an arrangement, the apparatus body **1**A can have a smaller size than in an arrangement where the fixing device **70** that is in the in-use position is located outside the first space.

[0103] In the present embodiment, as illustrated in FIG. **6**, when the door **20** is closed, at least part of the duplex conveyance path **20***a* overlaps the first space. Specifically, with the door **20** closed, at least part of the duplex conveyance path **20***a* is located inside the first space.

[0104] As described above, at least part of the fixing device **70** that is in the in-use position is located inside the first space. Therefore, when the fixing device **70** is in the in-use position, the tray unit **50** is prevented from moving from the first inside position to the first outside position. Instead, the fixing device **70** is retractable from the in-use position. With the fixing device **70** retracted from the in-use position, the tray unit **50** is allowed to move from the first inside position to the first outside position. When the tray unit **50** moves from the first inside position to the first outside position, the tray unit **50** travels below the fixing device **70**. The fixing device **70** both when in the in-use position and when in the retracted position is located outside the second space. Therefore, both when the fixing device **70** is in the in-use position and when the fixing device **70** is in the retracted position, the transfer unit **40** is allowed to move from the second inside position to the second outside position. When the transfer unit **40** moves from the second inside position to the second outside position, the transfer unit **40** travels below the fixing device **70**.

[0105] The fixing device **70** includes a fixing frame **70***a*, which supports the fixing unit **70***b*. When the fixing device **70** retracts from the in-use position, the fixing frame **70***a* is displaced relative to the apparatus body **1**A while supporting the fixing unit **70***b*.

[0106] To draw the tray unit **50** to the outside of the apparatus body **1**A, the door **20** is first moved to the open position as illustrated in FIG. **2**. In Example 1, with the fixing device **70** being in the in-use position, the door **20** is allowed to move between the open position and the closed position. With the door **20** being in the open position, the fixing device **70** is moved from the in-use position to the retracted position, as illustrated in FIG. **3**, in such a manner as to move to the outside of the first space.

[0107] In the printer **1** according to Example 1, the fixing device **70** is movable between the in-use position and the retracted position that is retracted from the in-use position while being kept attached to the apparatus body **1**A. In the present embodiment, when the fixing device **70** is in the retracted position, the entirety of the fixing device **70** is located outside the first space.

[0108] To move the fixing device **70** to the retracted position that is above the in-use position, the fixing device **70** is lifted upward from the in-use position. That is, the retracted position is higher than the in-use position. As illustrated in FIG. **7**, when the fixing device **70** is in the retracted position, at least part of the fixing device **70** projects from the apparatus body **1**A to the outside of the apparatus body **1**A. When the fixing device **70** is in the retracted position, at least part of the fixing device **70** is located higher than the upper cover portion **20***b* of the door **20** that is in the closed position. Therefore, in a vertical direction V, while the size of the printer **1** with the fixing device **70** being in the in-use position is kept small, a satisfactory space for the tray unit **50** to move is produced with the movement of the fixing device **70** to the retracted position. When the fixing device **70** is in the retracted position, the door **20** is prevented from taking the closed position.

[0109] Specifically, the printer **1** includes a coupling member (fixing coupling member, fixing link, or arm) **75**, which is movably attached to the apparatus body **1**A. The fixing device **70** is coupled to the apparatus body **1**A by the coupling member **75**.

[0110] The coupling member **75** is rotatable about a pivot **75**A. With the movement of the tray unit **50** to the outside of the apparatus body **1**A, the coupling member **75** is moved to the outside of the first space. The fixing device **70** is rotatably connected to one end of the coupling member **75**. The coupling member **75** is connected at the other end thereof to the apparatus body **1**A in such a manner as to be rotatable about the pivot **75**A. With the fixing device **70** supported by the coupling member **75** (with the fixing device **70** coupled to the apparatus body **1**A by the coupling member **75**), the fixing device **70** is movable from the in-use position to the retracted position and from the retracted position to the in-use position. The coupling member **75** is movable (swingable) relative to the apparatus body **1**A and the fixing device **70**. That is, the fixing device **70** is connected to the apparatus body **1**A with the aid of the coupling member **75**. Thus, the amount of travel of the fixing device **70** moving between the retracted position and the in-use position is made greater than in a configuration where the fixing device **70** is directly connected to the apparatus body **1**A.

[0111] As illustrated in FIG. **7**, in the movement of the tray unit **50** from the first inside position to the first outside position, the angle formed between the direction of travel of the tray unit **50** and the horizontal direction H is smaller than the angle formed between the direction of travel of the tray unit **50** and the vertical direction V. Furthermore, in the movement of the fixing device **70** from the in-use position to the retracted position, the amount of travel of the fixing device **70** is greater in the vertical direction V than in the horizontal direction H. In other words, in the movement of the fixing device **70** from the in-use position to the retracted

position, the amount of travel of the fixing device **70** is greater in a direction perpendicular to the direction of travel of the tray unit **50** than in a direction parallel to the direction of travel of the tray unit **50**.

[0112] The movement of the fixing device **70** between the in-use position and the retracted position may be realized with the aid of a guide that is fixed to the apparatus body **1**A and with which the fixing device **70** is attached to the apparatus body **1**A. Such a guide may have any shape.

[0113] The method of moving the fixing device **70** to the outside of the first space is not limited to the above.

[0114] For example, the fixing device **70** may be detachable from the apparatus body **1**A in such a manner as to move away from the in-use position, whereby the fixing device **70** may be moved to the outside of the first space. That is, to bring the fixing device **70** to the outside of the first space, the fixing device **70** may be separated from the apparatus body **1**A and from the door **20** (from the main frame **100**). Alternatively, the fixing device **70** may be coupled to the door **20**. In that case, opening the door **20** moves the fixing device **70** to the outside of the first space.

Relationship Between Tray Unit and Transfer Unit

[0115] Referring to FIGS. **1**, **2**, **3**, **4**, **5**, **6**, and **7**, the relationship between the tray unit **50** and the transfer unit **40** will now be described.

[0116] As illustrated in FIG. **3**, with the fixing device **70** positioned outside the first space, the user grabs the tray handle **52** of the tray unit **50** and moves the tray unit **50** to the outside of the apparatus body **1**A.

[0117] Referring to FIGS. **6** and **7**, in the image forming operation that is performed on the sheet S, the transfer unit **40** and the first space are in the following relationship.

[0118] In the image forming operation that is performed on the sheet S, the transfer unit **40** is in the second inside position. As illustrated in FIGS. **6** and **7**, at least part of the transfer unit **40** that is in the second inside position overlaps the first space. In other words, when the transfer unit **40** is in the second inside position, at least part of the transfer unit **40** is located inside the first space.

[0119] In Example 1, at least part of the transfer unit **40** overlaps the space through which the tray **51** travels along with the movement of the tray unit **50** from the first inside position to the first outside position. Alternatively, at least part of the transfer unit **40** may overlap the space through which the cartridges P travel.

[0120] In such an arrangement, the apparatus body **1**A can have a smaller size than in an arrangement where the transfer unit **40** that is in the second inside position is located outside the first space.

[0121] In the printer **1** according to Example 1, the part of the transfer unit **40** that overlaps the first space is the cleaner **43** including the cleaning member **43**A. Alternatively, another part of the transfer unit **40** may overlap the first space. In Example 1, the cleaning member **43**A included in the transfer unit **40** that is in the second inside position overlaps the first space.

[0122] It can be stated that the tray unit **50** and the transfer unit **40** satisfy the following relationship.

[0123] When the tray unit **50** is in the first inside position and the transfer unit **40** is in the second inside position, a part (the cleaner **43**) of the transfer unit **40** is located on the downstream side relative to the tray unit **50** in the direction of travel of the tray unit **50** moving from the first inside position to the first outside position. Furthermore, with respect to the vertical direction V, the area (range) where the part (the cleaner **43**) of the transfer unit **40**, which is located on the downstream side relative to the tray unit **50**, is disposed at least partially overlaps the area (range) where the tray unit **50** is disposed.

[0124] In the present embodiment, when the door **20** is in the closed position, at least part of the duplex conveyance path **20***a* overlaps the second space through which the transfer unit **40** is to travel when moving from the second inside position to the second outside position. That is, when the door **20** is in the closed position, at least part of the duplex conveyance path **20***a* is located inside the second space.

[0125] As described above, when the transfer unit **40** is in the second inside position, at least part of the transfer unit **40** is located inside the first space. Therefore, in Example 1, when the user moves the tray unit **50** relative to the apparatus body **1**A from the first inside position to the first outside position, the transfer unit **40** is also moved relative to the apparatus body **1**A from the second inside position to the second outside position. That is, with the transfer unit **40** caught by the tray unit **50**, the tray unit **50** moves from the first inside position to the first outside position, and the transfer unit **40** moves from the second inside position to the second outside position.

[0126] Moving the tray unit **50** and the transfer unit **40** altogether reduces the probability that the photoconductor drums **61** may be exposed with the movement of the tray unit **50** to the first outside position and thus reduces the probability that the photoconductor drums **61** may be scratched and/or contaminated.

[0127] As illustrated in FIG. **7**, with the door **20** being open and the tray unit **50** and the transfer unit **40** being in the first outside position and the second outside position, respectively, the transfer unit **40** supports the tray unit **50** from below the tray unit **50**. Furthermore, in the present embodiment, the door **20** supports the transfer unit **40**. That is, the transfer unit **40** supported by the door **20** supports the tray unit **50**. Such a state may also be expressed that the door **20** supports the tray unit **50** with the transfer unit **40** interposed in between.

[0128] A configuration that enables the tray unit **50** and the transfer unit **40** to move together will now be described with reference to FIGS. **8**, **9**, and **10**. FIGS. **8**, **9**, and **10** illustrate a coupling member (lever, stopper, or locking member) **53**, which couples the tray **51** of the tray unit **50** and the transfer unit **40** to each other.

[0129] The printer **1** according to Example 1 includes the locking member **53**. In Example 1, the locking member **53** is provided on the tray **51** of the tray unit **50**. The locking member **53** includes a transfer locker **53**A and is rotatable about a pivot **53**B.

[0130] The tray **51** includes a transfer coupler **51**A. The transfer unit **40** includes a transfer frame **48**, which supports the driving roller **46**, the tension roller **47**, and the primary transfer roller **42**. The transfer frame **48** has a tray coupling groove **48**A and a locker coupler **48**B.

[0131] The locking member **53** that is rotatable about the pivot **53**B is movable between a coupling position and a releasing position. In the coupling position, the transfer locker **53**A is in engagement with the locker coupler **48**B,

whereby the transfer unit **40** and the tray unit **50** are coupled to each other. The releasing position is retracted from the coupling position.

[0132] With the transfer coupler **51**A being in engagement with the tray coupling groove **48**A, the tray unit **50** is prevented from moving relative to the transfer unit **40** in the first detaching direction (tray detaching direction) Dd**1** and in a direction orthogonal to the first detaching direction Dd**1**. Meanwhile, the transfer unit **40** is prevented from moving relative to the tray unit **50** in the second attaching direction (transfer attaching direction) Da**2** and in a direction orthogonal to the second attaching direction Da**2**.

[0133] A configuration similar to the above is provided at each of the following four locations: locations near two respective ends of the tension roller **47** in the direction of the rotation axis of the tension roller **47**, and locations near two respective ends of the driving roller **46** in the direction of the rotation axis of the driving roller **46**.

[0134] With the transfer locker **53**A of the locking member **53** that is in the coupling position being in engagement with the locker coupler **48**B, the tray unit **50** is prevented from moving relative to the transfer unit **40** in the first attaching direction (tray attaching direction) Da**1**. Meanwhile, the transfer unit **40** is prevented from moving relative to the tray unit **50** in the second detaching direction (transfer detaching direction) Dd**2**.

[0135] The locking member **53** and the locker coupler **48**B may also be provided at each of the two ends of the transfer unit **40** in the direction of the rotation axis of the tension roller **47**.

[0136] That is, with the transfer coupler **51**A being in engagement with the tray coupling groove **48**A and with the locking member **53** that is in the coupling position being in engagement with the locker coupler **48**B, the transfer unit **40** and the tray unit **50** are prevented from moving relative to each other. The transfer unit **40** and the tray unit **50** in such a state may have play in between.

[0137] It can also be stated that the transfer coupler **51**A and the locking member **53** serve as a tray-side coupling device, and the tray coupling groove **48**A and the locking member **48**B serve as a transfer-side coupling device. Coupling the tray-side coupling device and the transfer-side coupling device to each other couples the tray unit **50** and the transfer unit **40** to each other, whereby the tray unit **50** and the transfer unit **40** are enabled to move together.

[0138] As illustrated in FIG. **10**, the apparatus body **1**A includes an unlocker **1**B. With the tray unit **50** being in the first inside position and the transfer unit **40** being in the second inside position, the locking member **53** is in contact with the unlocker **1**B, that is, the locking member **53** is in the releasing position. In such a state, the transfer locker **53**A is away from the locker coupler **48**B.

[0139] With the locking member **53** being in the releasing position, when the tray unit **50** is moved in the first detaching direction Dd**1**, the transfer coupler **51**A pushes the transfer unit **40** in the second detaching direction Dd**2**. Accordingly, the transfer unit **40** moves together with the tray unit **50** in the second detaching direction Dd**2**. When the tray unit **50** moves by a predetermined distance in the first detaching direction Dd**1**, the locking member **53** moves away from the unlocker **1**B to the coupling position and engages with the locker coupler **48**B. With the locking member **53** moved to the coupling position and thus being in engagement with the locker coupler **48**B, the tray unit **50** and the transfer unit **40** are moved to the first outside position and the second outside position, respectively.

[0140] With the locking member **53** being in engagement with the locker coupler **48**B, when the tray unit **50** is moved in the first attaching direction Da**1**, the locking member **53** pushes the transfer unit **40** in the second attaching direction Da**2**. Accordingly, the transfer unit **40** moves together with the tray unit **50** in the second attaching direction Da**2**.

[0141] With the locking member **53** being in engagement with the locker coupler **48**B, when the transfer unit **40** is moved in the second attaching direction Da**2**, the transfer unit **40** pushes the transfer coupler **51**A, whereby the tray unit **50** is pushed in the first attaching direction Da**1**. Accordingly, the tray unit **50** moves together with the transfer unit **40** in the first attaching direction Da**1**.

[0142] When the tray unit **50** and the transfer unit **40** are moved altogether toward the inside of the apparatus body **1**A, the unlocker **1**B moves the locking member **53** to the releasing position. In such a state, the transfer unit **40** does not move even if the tray unit **50** is moved in the first attaching direction Da**1**. Instead, in the process of closing the door **20**, a force that brings the secondary transfer roller **45** into contact with the transfer unit **40** pushes the transfer unit **40** in the second attaching direction Da**2** deeply (to the second inside position) inside the apparatus body **1**A. That is, the door **20** is able to push the transfer unit **40** to bring the transfer unit **40** to the second inside position. Alternatively, the door **20** may push the tray unit **50** to bring the tray unit **50** to the first inside position.

[0143] On the other hand, with the locking member **53** being in the releasing position and the tray unit **50** being in the first inside position, when the transfer unit **40** is moved in the second detaching direction Dd**2**, the transfer unit **40** is allowed to move independently of the tray unit **50** from the second inside position to the second outside position. In the printer **1** according to Example 1, as illustrated in FIG. **5**, the transfer unit **40** is allowed to move to the outside (the second outside position) of the apparatus body **1**A with the tray unit **50** remaining on the inside (at the first inside position) of the apparatus body **1**A. Therefore, the transfer unit **40** is detachable from the apparatus body **1**A and is replaceable with a fresh transfer unit **40**.

[0144] In Example 1, when the tray unit **50** is in the first inside position, the position of the tray unit **50** is determined relative to the apparatus body **1**A independently of the transfer unit **40**. Furthermore, when the transfer unit **40** is in the second inside position, the position of the transfer unit **40** is determined relative to the apparatus body **1**A independently of the tray unit **50**. This is because of priority for accurate positioning of each of the transfer unit **40** and the tray unit **50** relative to the apparatus body **1**A. Therefore, when the tray unit **50** is in the first inside position and the transfer unit **40** is in the second inside position, a small clearance is provided between the tray coupling groove **48**A and the transfer coupler **51**A.

[0145] To enable the positioning of the tray unit **50** and the transfer unit **40** relative to each other with the tray unit **50** being in the first inside position and the transfer unit **40** being in the second inside position, the clearance between the tray coupling groove **48**A and the transfer coupler **51**A may be eliminated. In that case, the accuracy of positioning of the transfer unit **40** and the tray unit **50** relative to each other is increased.

How Tray Unit and Transfer Unit Move

[0146] As illustrated in FIGS. **1**, **6**, and **7**, the tray unit **50** and the transfer unit **40** when attached to the apparatus body **1**A are inclined relative to the horizontal direction H.

[0147] More specifically, when the tray unit **50** is in the first inside position, the rotation axes of those photoconductor drums **61** that are closer to the first end portion **1***b***1** lie higher in the vertical direction V than the rotation axes of those photoconductor drums **61** that are farther from the first end portion **1***b***1**.

[0148] That is, when the tray unit **50** is in the first inside position, the second photoconductor drum is located closer to the first end portion **1***b***1** than the first photoconductor drum is to the first end portion **1***b***1**, and the rotation axis of the second photoconductor drum lies higher in the vertical direction V than the rotation axis of the first photoconductor drum. Likewise, the third photoconductor drum is located closer to the first end portion **1***b***1** than the second photoconductor drum is to the first end portion **1***b***1**, and the rotation axis of the third photoconductor drum lies higher in the vertical direction V than the rotation axis of the second photoconductor drum. The fourth photoconductor drum is located closer to the first end portion **1***b***1** than the third photoconductor drum is to the first end portion **1***b***1**, and the rotation axis of the fourth photoconductor drum lies higher in the vertical direction V than the rotation axis of the third photoconductor drum.

[0149] When the tray unit **50** is in the first inside position, at least part of each of those cartridges P that are located closer to the first end portion **1***b***1** is located higher in the vertical direction V than those cartridges P that are located farther from the first end portion **1***b***1**.

[0150] That is, when the tray unit **50** is in the first inside position, the cartridge PC is located closer to the first end portion **1***b***1** than the cartridge PK, and at least part of the cartridge PC is located higher in the vertical direction V than the cartridge PK. Likewise, the cartridge PM is located closer to the first end portion **1***b***1** than the cartridge PC, and at least part of the cartridge PM is located higher in the vertical direction V than the cartridge PC. The cartridge PY is located closer to the first end portion **1***b***1** than the cartridge PM, and at least part of the cartridge PY is located higher in the vertical direction V than the cartridge PM.

[0151] Referring to FIG. **1**, a straight line connecting the centers of the photoconductor drums **61** to one another is denoted as a line LD. In Example 1, when the tray unit **50** is in the first inside position, the line LD is inclined upward relative to the horizontal direction H from the side farther from the first end portion **1***b***1** toward the side closer to the first end portion **1***b***1**.

[0152] Furthermore, the contact surface of the belt **41** that is in contact with the first photoconductor drum, the second photoconductor drum, the third photoconductor drum, and the fourth photoconductor drum is inclined upward from the side farther from the first end portion **1***b***1** toward the side closer to the first end portion **1***b***1**.

[0153] The direction of travel of the tray unit **50** moving from the first inside position to the first outside position is referred to as a drawing direction for the tray unit **50**. When the tray unit **50** is in the first inside position, the tray unit **50** is inclined such that a downstream portion of the tray unit **50** in the drawing direction for the tray unit **50** is located higher in the vertical direction V than an upstream portion of the tray unit **50**. In other words, the tray unit **50** is inclined obliquely upward relative to the horizontal direction H toward the downstream side in the drawing direction.

[0154] Likewise, the direction of travel of the tray **51** of the tray unit **50** moving from the first inside position to the first outside position is referred to as a drawing direction for the tray **51**. When the tray **51** is in the first inside position, the tray **51** is inclined such that a downstream portion of the tray **51** in the drawing direction for the tray **51** is located higher in the vertical direction V than an upstream portion of the tray **51**. In other words, the tray **51** is inclined obliquely upward relative to the horizontal direction H toward the downstream side in the drawing direction.

[0155] As illustrated in FIG. **1**, the tray **51** has a tray lower surface **51***c*. The tray lower surface **51***c* faces downward when the tray unit **50** is in the first inside position. More specifically, the tray lower surface **51***c* refers to the largest one of the surfaces of the tray **51** that face downward when the tray unit **50** is in the first inside position. The tray lower surface **51***c* has a downstream end **51***c***1** and an upstream end **51***c***2**, which are with respect to the drawing direction for the tray unit **50**. When the tray unit **50** moves from the first inside position to the first outside position, the downstream end **51***c***1** is located downstream of the upstream end **51***c***2**. In Example 1, when the tray unit **50** is in the first inside position, the tray lower surface **51***c* is inclined upward relative to the horizontal direction H from the side farther from the first end portion **1***b***1** toward the side closer to the first end portion **1***b***1**. Furthermore, in the vertical direction V, the downstream end **51***c***1** is located higher than the upstream end **51***c***2**.

[0156] When the tray unit **50** moves from the first inside position to the first outside position, the tray unit **50** travels in a direction inclined relative to the horizontal direction H (in the present embodiment, a direction inclined upward relative to the horizontal direction H). That is, when the tray unit **50** moves from the first inside position to the first outside position, the tray unit **50** travels obliquely upward.

[0157] During the movement of the tray unit **50** from the first inside position to the first outside position, the direction of travel of the tray unit **50** changes downward from the obliquely upward direction. The direction of travel of the tray unit **50** may include a direction parallel to the horizontal direction H or an obliquely downward direction relative to the horizontal direction H.

[0158] The angle formed between the line LD and the horizontal direction H is smaller when the tray unit **50** is in the first outside position than when the tray unit **50** is in the first inside position. When the tray unit **50** is in the first outside position, although the line LD and the horizontal direction H in Example 1 are parallel to each other, the line LD may alternatively be inclined downward or upward relative to the horizontal direction H.

[0159] Likewise, during the movement of the transfer unit **40** from the second inside position to the second outside position, the direction of travel of the transfer unit **40** changes downward from the obliquely upward direction. The direction of travel of the transfer unit **40** may include a direction parallel to the horizontal direction H or an obliquely downward direction relative to the horizontal direction H.

[0160] The angle formed between the contact surface of the belt **41** and the horizontal direction H is smaller when the transfer unit **40** is in the second outside position than when the transfer unit **40** is in the second inside position. When the

transfer unit **40** is in the second outside position, although the contact surface of the belt **41** and the horizontal direction H in Example 1 are parallel to each other, the contact surface of the belt **41** may alternatively be inclined downward or upward relative to the horizontal direction H.

[0161] In the movement of the tray unit **50** from the first outside position to the first inside position, the tray unit **50** first travels in the horizontal direction H and then travels obliquely downward. In the movement of the transfer unit **40** from the second outside position to the second inside position, the transfer unit **40** first travels in the horizontal direction H and then travels obliquely downward. In such a configuration, the weights of the tray unit **50** and the transfer unit **40** themselves can be utilized in inserting the tray unit **50** and the transfer unit **40** into the apparatus body **1**A.

[0162] The above horizontal direction H may also be referred to as a first direction that is orthogonal to the vertical direction V. The first direction is a direction intersecting (preferably orthogonal to) the direction of the rotation axes of the photoconductor drums **61** and is a direction intersecting (preferably orthogonal to) the direction of the rotation axis of the driving roller **46**. A direction that is orthogonal to both the horizontal direction H and the vertical direction V may also be referred to as a second direction. The second direction is parallel to the direction of the rotation axis of the driving roller **46** and to the direction of the rotation axes of the photoconductor drums **61**. It can be stated that FIGS. **1** to **7** each illustrate the printer **1** seen in the second direction. The second direction may also be referred to as the widthwise direction of the sheet S.

[0163] Hereinafter, in the vertical direction V, the upper side of the printer **1** is referred to as the top-face side, and the lower side of the printer is referred to as the bottom-face side. In the horizontal direction H, one side of the printer **1** is referred to as the front-face side, and the other side of the printer **1** is referred to as the rear-face side. The first end portion **1***b***1** is located on the front-face side, and the second end portion **1***b***2** is located on the rear-face side. Seeing the printer **1** from the front-face side, the right side and the left side of the printer in the second direction are referred to as the right-face side and the left-face side, respectively.

How Electric Components are Supported

[0164] Referring to FIGS. **11** to **13**, the layout of electric components included in the printer **1** will now be described. The electric components include a power source board that receives an alternating-current voltage from a commercial power source, electric boards such as a control board that controls operations of relevant elements included in the printer **1**, and drive sources.

[0165] FIGS. **11** and **12** illustrate the positions of the electric components included in the printer **1** according to Example 1. In FIG. **12**, exterior members, such as the door **20**, of the apparatus body **1**A of the printer **1** are not illustrated. FIG. **13** illustrates the positions of the door **20** and an inlet **82***a*, which will be described below, according to Example 1.

[0166] As illustrated in FIG. **12**, the apparatus body **1**A includes a right side plate (first side wall) **90**, which is located at one end in the second direction; and a left side plate (second side wall) **91**, which is located at the other end in the second direction. The right side plate **90** and the left side plate **91** support the tray unit **50** that is in the first inside position. The right side plate **90** and the left side plate **91** also support the transfer unit **40** that is in the second inside position. The right side plate **90** and the left side plate **91** are each made of sheet metal.

[0167] The tray unit **50** is movable between the first inside position and the first outside position in such a manner as to move relative to the right side plate **90** and the left side plate **91** in a direction intersecting (preferably orthogonal to) the second direction.

[0168] The transfer unit **40** is movable between the second inside position and the second outside position in such a manner as to move relative to the right side plate **90** and the left side plate **91** in a direction intersecting (preferably orthogonal to) the second direction. The right side plate **90** and the left side plate **91** include guide parts where the tray unit **50** and the transfer unit **40** are guided while moving.

[0169] As illustrated in FIGS. **11** and **12**, the apparatus body **1**A includes a first rear stay **92** and a second rear stay **94**. The first rear stay **92** and the second rear stay **94** are each an exemplary rear wall. In the first direction, the first rear stay **92** and the second rear stay **94** are located closer to the second end portion **1***b***2** than to the first end portion **1***b***1**. More specifically, the first rear stay **92** is located at the second end portion **1***b***2**, and at least part of the first rear stay **92** is located between the right side plate **90** and the left side plate **91** in the second direction. The second rear stay **94** is located at the second end portion **1***b***2**, and at least part of the second rear stay **94** is located between the right side plate **90** and the left side plate **91** in the second direction. The first rear stay **92** and the second rear stay **94** are each made of sheet metal.

[0170] The first rear stay **92** is fixed to at least one of the right side plate **90** and the left side plate **91**. The second rear stay **94** is fixed to at least one of the right side plate **90** and the left side plate **91**. In the present embodiment, the first rear stay **92** is fixed to both the right side plate **90** and the left side plate **91**, and the second rear stay **94** is fixed to both the right side plate **90** and the left side plate **91**. In the present embodiment, the first rear stay **92** is fixed to the second rear stay **94**.

[0171] As illustrated in FIG. **11**, the apparatus body **1**A includes an upper stay **93**. The upper stay **93** is an exemplary upper wall. In the first direction, the upper stay **93** is located closer to the second end portion **1***b***2** than to the first end portion **1***b***1**. At least part of the upper stay **93** is located between the right side plate **90** and the left side plate **91** in the second direction. The upper stay **93** is fixed to at least one of the right side plate **90** and the left side plate **91**. In the present embodiment, the upper stay **93** is fixed to both the right side plate **90** and the left side plate **91**. The upper stay **93** is made of sheet metal.

[0172] When the tray unit **50** is in the first inside position, at least part of the tray unit **50** is located below the upper stay **93**. In the present embodiment, the entirety of the tray unit **50** is located below the upper stay **93**, and at least part of the scanner **6** is located below the upper stay **93**.

[0173] With respect to the first direction, the location (position) of the upper stay **93** and the location (position) of the tray unit **50** at least partially overlap each other. That is, at least part of the tray unit **50** that is in the first inside position is located directly below the upper stay **93**.

[0174] With respect to the first direction, the location (position) of the upper stay **93** and the location (position) of

the scanner **6** at least partially overlap each other. That is, at least part of the scanner **6** is located directly below the upper stay **93**.

[0175] As illustrated in FIG. **11**, the apparatus body **1**A includes a bottom plate **95**. The bottom plate **95** is an exemplary bottom wall. At least part of the bottom plate **95** is located between the right side plate **90** and the left side plate **91** in the second direction. The bottom plate **95** is fixed to at least one of the right side plate **90** and the left side plate **91**. In the present embodiment, the bottom plate **95** is fixed to both the right side plate **90** and the left side plate **91**.

[0176] The right side plate **90**, the left side plate **91**, the first rear stay **92**, the second rear stay **94**, the upper stay **93**, and the bottom plate **95** may each be fixed to a corresponding element by way of screwing, welding, or the like.

[0177] The printer **1** includes an imaging motor M**1**, a sheet feeding motor M**2**, and a fixing motor M**3**. The imaging motor M**1**, the sheet feeding motor M**2**, and the fixing motor M**3** are each an exemplary drive source.

[0178] The sheet feeding motor M**2** is configured to drive the inner plate **33** such that the sheets S on the stacking tray **31** are lifted to reach the feed roller **32**. The sheet feeding motor M**2** is also configured to drive the feed roller **32**.

[0179] The sheet feeding motor M**2** is provided on the right side plate **90**.

[0180] The printer **1** includes a fixing drive unit D**2**, which includes the fixing motor M**3**. The fixing drive unit D**2** is provided on the right side plate **90**. The fixing motor M**3** is configured to drive the pressure roller (fixing roller) **77** included in the fixing device **70**. The fixing drive unit D**2** may include a fixing drive train (fixing gear train) configured to transmit the driving force of the fixing motor M**3** to the pressure roller **77**.

[0181] The printer **1** includes an imaging drive unit D**1**, which includes the imaging motor M**1** and an imaging drive train (imaging gear train) **74**. The imaging drive train **74** is configured to transmit the driving force of the imaging motor M**1** to the tray unit **50**. The imaging drive unit D**1** is provided on the right side plate **90**. In the present embodiment, the imaging motor M**1** is configured to drive the driving roller **46** of the transfer unit **40** and so forth.

[0182] In the present embodiment, the imaging drive train **74** is configured to transmit the driving force of the imaging motor M**1** to the photoconductor drums **61** of the yellow station, the magenta station, the cyan station, and the black station. The imaging drive train **74** may be configured to transmit the driving force of the imaging motor M**1** to the developing rollers **63** of the yellow station, the magenta station, the cyan station, and the black station. The imaging drive train **74** may be configured to transmit the driving force of the imaging motor M**1** to both the developing rollers **63** and the photoconductor drums **61** of the yellow station, the magenta station, the cyan station, and the black station.

[0183] The imaging drive train **74** includes drive output parts **74***a*. When the tray unit **50** is in the first outside position, the drive output parts **74***a* are out of connection with the tray unit **50**. When the tray unit **50** is in the first inside position and an image forming operation is to be performed on a sheet S, the drive output parts **74***a* are connected to the tray unit **50** so that the driving force of the imaging motor M**1** is transmitted to the tray unit **50**.

[0184] The drive output parts **74***a* may each be, for example, a gear or a coupling. The imaging drive train **74** includes drive output parts **74***a*Y, **74***a*M, **74***a*C, and **74***a*K.

[0185] The drive output part **74***a*Y is configured to transmit the driving force of the imaging motor M**1** to the yellow station to drive at least one of the photoconductor drum **61** and the developing roller **63** of the yellow station. If the drive output part **74***a*Y is configured to drive both the photoconductor drum **61** and the developing roller **63**, the drive output part **74***a*Y may include a member that drives the photoconductor drum **61** and a member that drives the developing roller **63**.

[0186] The drive output parts **74***a*M, **74***a*C, and **74***a*K are configured to transmit the driving force of the imaging motor M**1** to the magenta station, the cyan station, and the black station, respectively. The drive output parts **74***a*M, **74***a*C, and **74***a*K have the same configuration as the drive output part **74***a*Y.

[0187] As illustrated in FIG. **11**, the transfer unit **40** is inclined downward toward a side away from the secondary transfer portion in the first direction. Since the transfer unit **40** is inclined downward, a part of the transfer unit **40** is accommodated in a space between the secondary transfer portion and the stacking tray **31** in the vertical direction V. Thus, the size of the printer **1** in the vertical direction V is reduced.

[0188] Along with the transfer unit **40** inclined downward, the tray unit **50** is inclined downward toward the side away from the secondary transfer portion in the first direction. Along with the tray unit **50** inclined downward, the direction in which the photoconductor drums **61** are side by side is inclined downward toward the side away from the secondary transfer portion in the first direction. Correspondingly, the scanner **6** is inclined downward toward the side away from the secondary transfer portion in the first direction.

[0189] In the present embodiment, when the tray unit **50** is in the first inside position, the photoconductor drum **61** of the cyan station is located closer in the first direction to the first end portion **1***b***1** than the photoconductor drum **61** of the black station. When the tray unit **50** is in the first inside position, at least part of the photoconductor drum **61** of the cyan station is located higher in the vertical direction V than the photoconductor drum **61** of the black station. The photoconductor drum **61** of the cyan station is an exemplary first rotary body. The photoconductor drum **61** of the black station is an exemplary second rotary body. When the tray unit **50** is in the first inside position, at least part of the photoconductor drum **61** of the black station is located lower in the vertical direction V than the secondary transfer roller **45**. The point of contact between the photoconductor drum **61** of the black station and the belt **41** is also located lower in the vertical direction V than the secondary transfer roller **45**.

[0190] Since the scanner **6** is inclined, the upper stay **93** and an electric board provided on the upper stay **93** are accommodated in a space produced above the scanner **6**. In Example 1, the upper stay **93** is provided with a control board **81**, which will be described separately below. In Example 1, the control board **81** is an exemplary upper board provided on the upper stay **93**.

[0191] With respect to the first direction, the location (position) of the electric board provided on the upper stay **93** and the location (position) of the tray unit **50** in the first inside position at least partially overlap each other. That is, at least part of the tray unit **50** that is in the first inside position is located directly below the electric board provided on the upper stay **93**.

[0192] With respect to the first direction, the location (position) of the electric board provided on the upper stay **93** and the location (position) of the scanner **6** at least partially overlap each other. That is, at least part of the scanner **6** is located directly below the electric board provided on the upper stay **93**.

[0193] The first rear stay **92** is provided with a connection board **83**. In the present embodiment, the first rear stay **92** is bent to have a depression, and the connection board **83** is accommodated in the depression of the first rear stay **92**. In Example 1, the connection board **83** is an exemplary rear board provided on the first rear stay **92**.

[0194] The connection board **83** includes a connector (connection connector or an external connection connector) **83***a*, which is connectable to the external instrument (external device) **400**. Examples of the connector **83***a* include a local-area-network (LAN) connector and a universal-serial-bus (USB) connector. The external instrument **400** is a device capable of outputting a printing instruction to the printer **1**. Examples of the external instrument **400** include a personal computer. The connection board **83** is capable of generating an image signal on the basis of the printing instruction (image information) transmitted from the external instrument **400** connected to the connector **83***a* with a cable or the like.

[0195] The connection board **83** has a mounting surface on which the connector **83***a* is mounted. The mounting surface of the connection board **83** extends in the vertical direction V. The angle (narrow angle) formed between the mounting surface of the connection board **83** and the vertical direction V may be smaller than 30 degrees. The mounting surface of the connection board **83** and the vertical direction V may be parallel to each other.

[0196] The mounting surface of the connection board **83** also extends in the second direction. The angle (narrow angle) formed between the mounting surface of the connection board **83** and the second direction may be smaller than 30 degrees. The mounting surface of the connection board **83** and the second direction may be parallel to each other.

[0197] The connection board **83** is connected to the control board **81** with a cable FFC**1**. The cable FFC**1** is a flexible flat cable. The image signal generated by the connection board **83** is transmitted through the cable FFC**1** to the control board **81**.

[0198] The control board **81** includes electric elements **81***a*. The electric elements **81***a* included in the control board **81** may be a central processing unit (CPU) and a storage device such as a random access memory (RAM) or a read-only memory (ROM). The control board **81** is configured to receive signals including the image signal outputted from the connection board **83**. The control board **81** according to Example 1 is configured to control the imaging motor M**1**, the sheet feeding motor M**2**, and the fixing motor M**3**. The control board **81** includes a CPU and a drive circuit that are configured to control the operations of the imaging motor M**1**, the sheet feeding motor M**2**, and the fixing motor M**3**.

[0199] The control board **81** may be configured to control at least one of the imaging motor M**1**, the sheet feeding motor M**2**, the fixing motor M**3**, the fixing device **70**, and the scanner **6**.

[0200] The control board **81** according to Example 1 further has a function of generating high voltages to be supplied to the cartridges P and to the transfer unit **40**.

[0201] The control board **81** has a mounting surface on which electric elements are mounted. The mounting surface of the control board **81** extends in the first direction. The angle (narrow angle) formed between the mounting surface of the control board **81** and the first direction may be smaller than 30 degrees. The mounting surface of the control board **81** and the first direction may be parallel to each other.

[0202] The mounting surface of the control board **81** also extends in the second direction. The angle (narrow angle) formed between the mounting surface of the control board **81** and the second direction may be smaller than 30 degrees. The mounting surface of the control board **81** and the second direction may be parallel to each other.

[0203] The printer **1** has an inlet **82***a*. In the first direction, the inlet **82***a* is located closer to the second end portion **1***b***2** than to the first end portion **1***b***1**. A plug or the like intended to connect a commercial power source and the printer **1** to each other is to be inserted into the inlet **82***a*. That is, the inlet **82***a* is configured to receive an alternating-current voltage supplied from a commercial power source.

[0204] FIG. **13** illustrates the printer **1** seen in the first direction. More specifically, FIG. **13** is a front view of the printer **1**. In FIG. **13**, the door **20** is in the closed position. As viewed in the first direction, the inlet **82***a* overlaps the door **20** that is in the closed position. The inlet **82***a* is located higher in the vertical direction V than a rotation axis **20***c* of the door **20**.

[0205] In Example 1, the inlet **82***a* is open in the first direction, more specifically, in a direction from the first end portion **1***b***1** toward the second end portion **1***b***2**. The inlet **82***a* is located closer to the top of the apparatus body **1**A than to the bottom of the apparatus body **1**A. That is, the apparatus body **1**A has an upper end and a lower end with respect to the vertical direction V, and the inlet **82***a* is located closer in the vertical direction V to the upper end than to the lower end.

[0206] The right side plate **90** is provided with a power source unit EU. The power source unit EU includes a power source board **88** and a power-source-board stay **99**. The power-source-board stay **99** serves as a casing that houses the power source board **88**. The power source board **88** is supported by the power-source-board stay **99** and is fixed to the right side plate **90** with the aid of the power-source-board stay **99**. In Example 1, the inlet **82***a* is supported by the power-source-board stay **99**.

[0207] In the first direction, at least a part of the power source board **88** is located closer to the second end portion **1***b***2** than the fixing device **70** and is located closer to the first end portion **1***b***1** than the inlet **82***a*.

[0208] The power source board **88** is supplied with an alternating-current voltage from a commercial power source through the inlet **82***a*.

[0209] In other words, the power source board **88** is configured to receive an alternating-current voltage supplied from a commercial power source through the inlet **82***a*.

[0210] The power source board **88** includes a wiring board **88***a* and at least one electric element **88***b*, which is mounted on the mounting surface of the wiring board **88***a*. The at least one electric element **88***b* includes a plurality of electric elements. Examples of the plurality of electric elements include a capacitor and a transformer.

[0211] The mounting surface of the wiring board **88***a* (the mounting surface of the power source board **88**) extends in the first direction. The angle (narrow angle) formed between

the mounting surface of the power source board **88** and the first direction may be smaller than 30 degrees. The mounting surface of the power source board **88** and the first direction may be parallel to each other.

[0212] The mounting surface of the power source board **88** also extends in the vertical direction V. The angle (narrow angle) formed between the mounting surface of the power source board **88** and the vertical direction V may be smaller than 30 degrees. The mounting surface of the power source board **88** and the vertical direction V may be parallel to each other.

[0213] In Example 1, the mounting surface of the wiring board **88***a* faces toward the right side plate **90** in the second direction. Therefore, the electric element **88***b* is located between the right side plate **90** and the wiring board **88***a* in the second direction.

[0214] As illustrated in FIG. **11**, as viewed in the second direction, the power source board **88** overlaps the discharge tray (discharge tray) **1***f* and the scanner **6**.

[0215] In the first direction, the power source board **88** is located closer to the second end portion **1***b***2** than to the first end portion **1***b***1**. In the first direction, the power source board **88** has a first board end **88***a***1** and a second board end **88***a***2**. In the first direction, the first board end **88***a***1** is located closer to the first end portion **1***b***1** than the second board end **88***a***2**.

[0216] As illustrated in FIG. **12**, with respect to the second direction, the location (position) of the power source unit EU (the area (range) where the power source unit EU is disposed) and the location (position) of the imaging drive unit D**1** (the area (range) where the imaging drive unit D**1** is disposed) overlap each other. In the vertical direction V, the power source unit EU is located higher than the imaging drive unit D**1**. In the vertical direction V, the power source unit EU is located higher than the imaging drive train **74**. In the present embodiment, the power source unit EU is located directly above the imaging drive unit D**1** and directly above the imaging drive train **74**.

[0217] The tray unit **50** is inclined downward toward a side away from the first end portion **1***b***1** in the first direction. Along with the tray unit **50** inclined downward, the direction in which the photoconductor drums **61** are side by side is inclined downward toward the side away from the first end portion **1***b***1** in the first direction. Correspondingly, the imaging drive train **74** is inclined downward toward the side away from the first end portion **1***b***1** in the first direction. Thus, the space above the imaging drive unit D**1** is increased near the second end portion **1***b***2**.

[0218] In Example 1, the power source unit EU is located above the imaging drive unit D**1**. That is, the space above the imaging drive unit D**1** is efficiently utilized for placing the power source unit EU.

[0219] In the vertical direction V, the first board end **88***a***1** is shorter than the second board end **88***a***2**. Therefore, the length of the power-source-board stay **99** can be made shorter at an end portion thereof closer in the first direction to the first end portion **1***b***1** than at an end portion thereof closer in the first direction to the second end portion **1***b***2**. Thus, the space produced by inclining the imaging drive train **74** is further efficiently utilized for placing the power source unit EU.

[0220] Since an increased space is provided above the imaging drive unit D**1**, the inlet **82***a* is allowed to be provided above the imaging drive unit D**1**. That is, the degree of freedom in the location (position) of the inlet **82***a* is increased.

[0221] The power source board **88** includes a connector **82***b*. The connector **82***b* is connected to the inlet **82***a* with a cable C**3**. The alternating-current voltage generated by the commercial power source is supplied from the inlet **82***a* through the cable C**3** and the connector **82***b* to the power source board **88**.

[0222] The power source board **88** has a function of a so-called AC-DC converter configured to convert an alternating-current voltage into a direct-current voltage. To realize the function, the power source board **88** includes a rectifying element, a smoothing capacitor, a transformer, a switching element, and a control integrated circuit (IC). The rectifying element, the smoothing capacitor, the transformer, the switching element, and the control IC are each an exemplary electric component **88***b*.

[0223] The power source board **88** is configured to supply electrical power to the connection board **83**, the control board **81**, the imaging motor M**1**, the sheet feeding motor M**2**, and the fixing motor M**3**. More specifically, the power source board **88** is configured to convert commercial-power-source voltages into direct-current voltages of 24 V, 3.3 V, and so forth and to supply the direct-current voltages to the connection board **83**, the control board **81**, the imaging motor M**1**, the sheet feeding motor M**2**, and the fixing motor M**3**. The imaging motor M**1**, the sheet feeding motor M**2**, and the fixing motor M**3** are each an exemplary drive source that is driven with the power supplied from the power source board **88**.

[0224] In Example 1, the power source board **88** and the control board **81** are connected to each other with a cable C**8**. The direct-current voltages of 24 V and 3.3 V are supplied to the control board **81** through the cable C**8**.

[0225] In Example 1, the power source board **88** and the control board **81** are connected to each other with a cable FFC**3**. The cable FFC**3** is a flexible flat cable. A signal for controlling the operation of the power source board **88** is transmitted from the control board **81** to the power source board **88** through the cable FFC**3**. The signal includes a signal for changing the operation mode of the AC-DC converter of the power source board **88** when the printer **1** goes into a power-saving mode.

[0226] In Example 1, the control board **81** and the connection board **83** are connected to each other with a cable C**1**. The direct-current voltage of 3.3 V is supplied from the control board **81** through the cable C**1** to the connection board **83**, whereby a control element (such as a central processing unit or processor) and so forth included in the connection board **83** are activated.

[0227] In Example 1, the power source board **88** is configured to supply electrical power to the fixing device **70**. More specifically, the heating roller **71** of the fixing device **70** includes a heater **87**, and the power source board **88** supplies power to the heater **87**.

[0228] The power source board **88** is configured to control a triac to be turned on and off in such a manner as to exert a function of converting a commercial-power-source voltage into a desired fixing-power-source voltage and supplying the converted voltage to the heater **87**. The commercial-power-source voltage, which is to be converted in Example 1, may be the alternating-current voltage that is received as is from

the commercial power source or may be a voltage obtained through a current fuse and/or a noise filter (not illustrated).

[0229] To supply a desired power to the fixing device **70**, the power source board **88** carries a switching element such as a triac, a circuit configured to activate the triac, a circuit configured to detect the period and/or phase of the commercial-power-source voltage, and so forth. With the triac controlled to be turned on and off, the commercial-power-source voltage (alternating-current voltage) is converted into a desired fixing-power-source voltage before being supplied to the heater **87**.

[0230] The fixing device **70** includes a receiving connector (fixing connector) **72**, which is to receive power from the power source board **88**. The receiving connector **72** is connected to the heater **87** with a cable C**7**. On the other hand, the apparatus body **1**A is provided with a supply connector **73** and a cable C**5**. The cable C**5** is connected to a connector **82***c*, which is provided on the power source board **88**. In the first direction, the connector **82***c* is located closer to the fixing device **70** than the inlet **82***a*.

[0231] The supply connector **73** is electrically connected to the power source board **88** through the cable C**5** and the connector **82***c*. The receiving connector **72** is detachably connected to the supply connector **73**.

[0232] In the second direction, the receiving connector **72** and the supply connector **73** are located closer to the right side plate **90** than to the left side plate **91**. In the first direction, the receiving connector **72** and the supply connector **73** are located closer to the first end portion **1***b***1** than to the second end portion **1***b***2**.

[0233] The power is supplied from the power source board **88** to the heater **87** through the connector **82***c*, the cable C**5**, the supply connector **73**, the receiving connector **72**, and the cable C**7**.

[0234] Through the cable FFC**3** that connects the power source board **88** and the control board **81** to each other, a signal for detecting the phase of the commercial-power-source voltage is transmitted to the control board **81**, and a heater control signal generated by the control board **81** from the phase of the commercial-power-source voltage is transmitted to the power source board **88**. On the basis of the heater control signal, the triac is controlled to be turned on and off to supply electrical power to the heater **87** such that the heater **87** comes to have a desired temperature corresponding to the characteristic of the sheet S and/or the printing speed.

Position of Power Source Unit

[0235] Referring to FIGS. **14** and **15**, the position of the power source unit EU will further be described in detail.

[0236] FIGS. **14** and **15** illustrate the position of the power source unit EU according to Example 1.

[0237] The printer **1** including the imaging drive unit D**1** and the fixing drive unit D**2** further includes a feeding drive unit D**3**. The feeding drive unit D**3** is provided on the right side plate **90**.

[0238] The feeding drive unit D**3** includes the sheet feeding motor M**2**. The feeding drive unit D**3** may include a gear (not illustrated) configured to transmit the driving force of the sheet feeding motor M**2** to the inner plate **33**, and/or a feeding drive train (feeding gear train) configured to transmit the driving force of the sheet feeding motor M**2** to the feed roller **32**.

[0239] FIG. **15** illustrates the printer **1** seen in the vertical direction V, more specifically, the printer **1** seen from the top-face side. In FIG. **15**, the feeding drive unit D**3** is hatched with oblique lines, and the imaging drive unit D**1** is hatched with dots.

[0240] As described above, the power source unit EU is located above the imaging drive unit D**1**.

[0241] As illustrated in FIG. **15**, as viewed in the vertical direction V, the power source unit EU and the imaging drive unit D**1** at least partially overlap each other. In Example 1, as described above, the electric element **88***b* mounted on the wiring board **88***a* of the power source board **88** is located between the wiring board **88***a* and the right side plate **90** in the second direction. As illustrated in FIG. **15**, as viewed in the vertical direction V, the wiring board **88***a*, the electric element **88***b*, and the power-source-board stay **99** overlap the imaging drive unit D**1**.

[0242] That is, as illustrated in FIG. **14**, with respect to the first direction, the location (position) of the power source unit EU (the area (range) where the power source unit EU is disposed) and the location (position) of the imaging drive unit D**1** (the area (range) where the imaging drive unit D**1** is disposed) at least partially overlap each other. In other words, at least part of the power source unit EU is located directly above the imaging drive unit D**1**.

[0243] As illustrated in FIG. **14**, with respect to the second direction, the location (position) of the feeding drive unit D**3** and the location (position) of the imaging drive unit D**1** at least partially overlap each other.

[0244] As illustrated in FIG. **14**, with respect to the vertical direction V, the location (position) of the feeding drive unit D**3** and the location (position) of the imaging drive unit D**1** at least partially overlap each other.

[0245] As viewed from the top-face side, the fixing drive unit D**2** and the power-source-board stay **99** are arranged in such a manner as not to overlap the discharge tray **1***f*. Thus, the power source board **88** can be placed in such a manner as to overlap the discharge tray (discharge tray) **1***f* in the second direction. Such an arrangement reduces the height of the printer **1** in the vertical direction V.

[0246] As illustrated in FIG. **14**, in the vertical direction V, at least part of the fixing drive unit D**2** is located higher than the imaging drive unit D**1**. In Example 1, at least part of the fixing drive unit D**2** is located directly above the imaging drive unit D**1**. That is, as viewed in the vertical direction V, the fixing drive unit D**2** at least partially overlaps the imaging drive unit D**1**.

[0247] With respect to the second direction, the location (position) of the imaging drive unit D**1** (the area (range) where the imaging drive unit D**1** is disposed) at least partially overlaps the location (position) of the fixing drive unit D**2** (the area (range) where the fixing drive unit D**2** is disposed). Thus, the size of the printer **1** in the second direction is reduced.

[0248] With respect to the first direction, the location (position) of the imaging drive unit D**1** (the area (range) where the imaging drive unit D**1** is disposed) at least partially overlaps the location (position) of the fixing drive unit D**2** (the area (range) where the fixing drive unit D**2** is disposed). Specifically, as illustrated in FIG. **15**, the imaging drive unit D**1** and the fixing drive unit D**2** overlap each other in a range E**1** with respect to the first direction.

[0249] Extending the fixing drive unit D**2** rearward provides a satisfactory space for placing components inside the

fixing drive unit D**2**. Instead, extending the fixing drive unit D**2** rearward reduces the space for placing the power source unit EU. Nevertheless, as described above, the power source unit EU is located above the imaging drive unit D**1**. That is, the space above the imaging drive unit D**1** is efficiently utilized for placing the power source unit EU. In the vertical direction V, the first board end **88***a***1** is shorter than the second board end **88***a***2**.

[0250] Therefore, the length of the power-source-board stay **99** can be made shorter at an end portion thereof closer in the first direction to the first end portion **1***b***1** than at an end portion thereof closer in the first direction to the second end portion **1***b***2**. Thus, the space produced by inclining the imaging drive train **74** is further efficiently utilized for placing the power source unit EU.

[0251] In Example 1, the imaging drive unit D**1** and the feeding drive unit D**3** are separate units. Alternatively, the imaging drive unit D**1** and the feeding drive unit D**3** may be integrated into a single unit, and the integrated unit may be placed on the bottom-face side in the vertical direction V relative to the fixing drive unit D**2** and the power-source-board stay **99**.

[0252] According to Example 1, the space, where the power source unit EU is disposed, is reduced.

Advantageous Effects

[0253] The printer **1** according to the present embodiment includes the door **20** at the first end portion **1***b***1**. Therefore, the tray unit **50**, the transfer unit **40**, the stacking tray **31**, the fixing device **70**, the conveyance path **1***c*, and the duplex conveyance path **20***a* are accessible at the first end portion **1***b***1**. As described above, the inlet **82***a* is located closer to the second end portion **1***b***2** than to the first end portion **1***b***1** in the first direction. Therefore, the plug-equipped power cable inserted into the inlet **82***a* has no chance of hindering operations to be performed on the foregoing elements.

[0254] Since the door **20** is provided at the first end portion **1***b***1** while the inlet **82***a* is provided at the second end portion **1***b***2**, the door **20** that is in the closed position and the inlet **82***a* are arranged in such a manner as to overlap each other as viewed in the first direction as illustrated in FIG. **13**.

[0255] In the first direction, at least a part of the power source board **88** is located closer to the second end portion **1***b***2** than the fixing device **70** and closer to the first end portion **1***b***1** than the inlet **82***a*. Therefore, power is supplied through a short path from the inlet **82***a* through the power source board **88** to the fixing device **70**.

[0256] In the first direction, the connector **82***c* is located closer to the first end portion **1***b***1** than the inlet **82***a*. Such an arrangement reduces the distance between the connector **82***c* and the supply connector **73** and accordingly reduces the length of the cable C**5**. That is, the cost related to the cable C**5** is reduced.

[0257] In Example 1, the power source board **88** and the imaging drive unit D**1** are provided on the right side plate **90**. The power source board **88** includes the electric element **88***b*, such as a transformer, which is a tall element. On the other hand, the imaging drive unit D**1** includes the motor M**1**. With respect to the second direction, the location (position) of the motor M**1** (the area (range) where the motor M**1** is disposed) and the location (position) of the electric element **88***b* (the area (range) where the electric element **88***b* is disposed) overlap each other. Thus, the space for placing the motor M**1** and the electric element **88***b* is reduced.

[0258] Either of the control board **81** and the connection board **83** is regarded as an exemplary first electric board provided on either of the upper stay **93** and the first rear stay **92**. If one of the control board **81** and the connection board **83** is defined as a first electric board, the other of the control board **81** and the connection board **83** is defined as an exemplary second electric board that is electrically connected to the first electric board.

[0259] The printer **1** according to the present embodiment includes the door **20** at the first end portion **1***b***1**. Therefore, the tray unit **50**, the transfer unit **40**, the stacking tray **31**, the fixing device **70**, the conveyance path **1***c*, and the duplex conveyance path **20***a* are accessible at the first end portion **1***b*L. In other words, the printer **1** does not need to have on the rear-face side thereof an opening that allows access to the inside of the printer **1** and a door that covers the opening. Therefore, a satisfactory space for placing the electric board is provided on the rear-face side of the printer **1**, and the space is utilized for placing the electric board.

[0260] The control board **81**, the power source board **88**, and the connection board **83** are connected to each other with connecting cables such as cables or flexible flat cables. The shorter the distance between the boards, the shorter the connecting cables and the greater the cost reduction. Furthermore, the shorter the connecting cables, the smaller the space for laying the connecting cables.

[0261] In the printer **1** according to Example 1, the control board **81** is located on the top-face side of the printer **1**, the power source board **88** is located on the right-face side, and the connection board **83** is located on the rear-face side. More specifically, the control board **81** is provided on the upper stay **93**, the power source board **88** is provided on the right side plate **90**, and the connection board **83** is provided on the first rear stay **92**. Thus, the control board **81**, the power source board **88**, and the connection board **83** are placed close to each other. Furthermore, since the control board **81**, the power source board **88**, and the connection board **83** are not concentratedly located on a single side of the printer **1** but are located on different sides, spaces on the respective sides are utilized.

[0262] In Example 1, the power source board **88** is located closer in the vertical direction V to the upper end of the printer **1** than to the lower end of the printer **1**. Such an arrangement reduces the lengths of the cable C**8** and the cable FFC**3** that connect the control board **81** and the power source board **88** to each other. The control board **81** may be located closer in the second direction to the right side plate **90** than to the left side plate **91**.

[0263] In the first direction, the control board **81** is located closer to the second end portion **1***b***2** than to the first end portion **1***b***1**. Such an arrangement reduces the lengths of the cable C**1** and the cable FFC**1** that connect the control board **81** and the connection board **83** to each other.

[0264] In Example 1, a larger space is provided for the control board **81** than for the connection board **83**.

[0265] The power source board **88**, the inlet **82***a*, the supply connector **73**, and the receiving connector **72** that are provided on the right side plate **90** in Example 1 may alternatively be provided on the left side plate **91**.

Example 2

[0266] Example 2 will now be described. In Example 2, elements having the same configurations as the elements

described in Example 1 are denoted by the same reference signs, and detailed description of such elements is omitted in principle.

[0267] FIG. **16** illustrates the positions of electric components included in a printer **1** according to Example 2.

[0268] The printer **1** according to Example 2 is different from the printer **1** according to Example 1 in that the power source board **88** is provided on the upper stay **93** while the control board **81** is provided on the right side plate **90**.

[0269] The right side plate **90** is provided with the control board **81** and a control-board stay **98**, which serves as a casing that houses the control board **81**. The control board **81** is supported by the control-board stay **98** and is fixed to the right side plate **90** with the aid of the control-board stay **98**.

[0270] In Example 2, the inlet **82***a* is supported by the second rear stay **94**. In the first direction, the inlet **82***a* is located closer to the second end portion **1***b***2** than to the first end portion **1***b***1**. As viewed in the first direction, the inlet **82***a* overlaps the door **20** that is in the closed position. The inlet **82***a* is located higher in the vertical direction V than the rotation axis **20***c* of the door **20**.

[0271] In Example 2, the inlet **82***a* is open in the first direction, more specifically, in a direction from the first end portion **1***b***1** toward the second end portion **1***b***2**. The inlet **82***a* is located closer to the top of the apparatus body **1**A than to the bottom of the apparatus body **1**A. That is, the apparatus body **1**A has an upper end and a lower end with respect to the vertical direction V, and the inlet **82***a* is located closer in the vertical direction V to the upper end than to the lower end.

Advantageous Effects

[0272] In the printer **1** according to Example 2 as well, the plug-equipped power cable inserted into the inlet **82***a* has no chance of hindering operations to be performed on relevant elements included in the printer **1**. Furthermore, since the door **20** is provided at the first end portion **1***b***1** while the inlet **82***a* is provided at the second end portion **1***b***2**, the door **20** that is in the closed position and the inlet **82***a* are arranged in such a manner as to overlap each other as viewed in the first direction.

[0273] In the first direction, at least a part of the power source board **88** is located closer to the second end portion **1***b***2** than the fixing device **70** and closer to the first end portion **1***b***1** than the inlet **82***a*. Therefore, power is supplied through a short path from the inlet **82***a* through the power source board **88** to the fixing device **70**.

[0274] In the first direction, the connector **82***c* is located closer to the first end portion **1***b***1** than the inlet **82***a*. Such an arrangement reduces the distance between the connector **82***c* and the supply connector **73** and accordingly reduces the length of the cable C**5**. That is, the cost related to the cable C**5** is reduced.

Example 3

[0275] Example 3 will now be described. In Example 3, elements having the same configurations as the elements described in either of Examples 1 and 2 are denoted by the same reference signs, and detailed description of such elements is omitted in principle.

[0276] FIG. **17** illustrates the positions of electric components included in a printer **1** according to Example 3. The printer **1** according to Example 3 is different from the printer **1** according to Example 1 in that the inlet **82***a* is located closer in the vertical direction V to the bottom of the apparatus body **1**A than to the top of the apparatus body **1**A.

[0277] In Example 3 as well, the inlet **82***a* is located closer in the first direction to the second end portion **1***b***2** than to the first end portion **1***b***1**. As viewed in the first direction, the inlet **82***a* overlaps the door **20** that is in the closed position. The inlet **82***a* is located higher in the vertical direction V than the rotation axis **20***c* of the door **20**.

[0278] In Example 3, the inlet **82***a* is open in the first direction, more specifically, in a direction from the first end portion **1***b***1** toward the second end portion **1***b***2**.

Advantageous Effects

[0279] In the printer **1** according to Example 3 as well, the plug-equipped power cable inserted into the inlet **82***a* has no chance of hindering operations to be performed on relevant elements included in the printer **1**. Furthermore, since the door **20** is provided at the first end portion **1***b***1** while the inlet **82***a* is provided at the second end portion **1***b***2**, the door **20** that is in the closed position and the inlet **82***a* are arranged in such a manner as to overlap each other as viewed in the first direction.

[0280] In the first direction, at least a part of the power source board **88** is located closer to the second end portion **1***b***2** than the fixing device **70** and closer to the first end portion **1***b***1** than the inlet **82***a*. Therefore, power is supplied through a short path from the inlet **82***a* through the power source board **88** to the fixing device **70**.

[0281] In the first direction, the connector **82***c* is located closer to the first end portion **1***b***1** than the inlet **82***a*. Such an arrangement reduces the distance between the connector **82***c* and the supply connector **73** and accordingly reduces the length of the cable C**5**. That is, the cost related to the cable C**5** is reduced.

Example 4

[0282] Example 4 will now be described. In Example 4, elements having the same configurations as the elements described in any of Examples 1 to 3 are denoted by the same reference signs, and detailed description of such elements is omitted in principle.

[0283] FIG. **18** illustrates the positions of electric components included in a printer **1** according to Example 4. The printer **1** according to Example 4 is different from the printer **1** according to Example 1 in that a fixing-power-source board **82** and an alternating current to direct current (AC-DC) power-source board **84** each have a similar function to the power source board **88** of the printer **1** according to Example 1. The printer **1** according to Example 4 is also different from the printer **1** according to Example 1 in that the inlet **82***a* is located closer in the vertical direction V to the bottom of the apparatus body **1**A than to the top of the apparatus body **1**A.

[0284] The right side plate **90** is provided with the AC-DC power-source board **84** and an AC-DC power-source stay **97**, which serves as a casing that houses the AC-DC power-source board **84**. The AC-DC power-source board **84** is supported by the AC-DC power-source stay **97** and is fixed to the right side plate **90** with the aid of the AC-DC power-source stay **97**.

[0285] The right side plate **90** is provided with the fixing-power-source board **82** and a fixing-power-source stay **96**,

which serves as a casing that houses the fixing-power-source board **82**. The fixing-power-source board **82** is supported by the fixing-power-source stay **96** and is fixed to the right side plate **90** with the aid of the fixing-power-source stay **96**.

[0286] In Example 4, the inlet **82***a* is supported by the AC-DC power-source stay **97**. In the first direction, the inlet **82***a* is located closer to the second end portion **1***b***2** than to the first end portion **1***b***1**. As viewed in the first direction, the inlet **82***a* overlaps the door **20** that is in the closed position. The inlet **82***a* is located higher in the vertical direction V than the rotation axis **20***c* of the door **20**.

[0287] The alternating-current voltage generated by the commercial power source is supplied through the cable C**3** to a connector **84***b*, which is provided on the AC-DC power-source board **84**. The AC-DC power-source board **84** includes an AC-DC converter (not illustrated) and is configured to convert commercial-power-source voltages into direct-current voltages of 24 V, 3.3 V, and so forth and to supply the direct-current voltages to the connection board **83**, the control board **81**, the imaging motor M**1**, the sheet feeding motor M**2**, and the fixing motor M**3**. In Example 4, the direct-current voltages of 24 V and 3.3 V are supplied to the control board **81** through a cable C**6**.

[0288] The cable C**6** transmits a signal for controlling the operation of the AC-DC power-source board **84**. The signal for controlling the operation of the AC-DC power-source board **84** includes a signal for changing the operation mode of the AC-DC converter when the printer **1** goes into a power-saving mode.

[0289] The alternating-current voltage supplied from the commercial power source to the AC-DC power-source board **84** is supplied to the connector **82***b* of the fixing-power-source board **82** through a cable C**4**. The alternating-current voltage generated by the commercial power source may be supplied as is to the fixing-power-source board **82** or may be supplied through a current fuse and/or a noise filter (not illustrated).

[0290] The fixing-power-source board **82** may carry a switching element such as a triac, a drive circuit, a circuit configured to detect the period and/or phase of the commercial power source, and so forth. The fixing-power-source board **82** is configured to control the triac to be turned on and off in such a manner as to exert a function of converting an alternating-current voltage into a desired voltage and supplying the converted voltage to the fixing device **70**.

[0291] The fixing-power-source board **82** and the control board **81** are connected to each other with a cable FFC**2**. The cable FFC**2** is a flexible flat cable. The cable FFC**2** transmits a heater control signal generated by the control board **81** on the basis of a signal for detecting the phase of the commercial power source and the phase of the commercial power source.

[0292] On the basis of the heater control signal, the fixing-power-source board **82** controls the above-described triac to be turned on and off to supply electrical power to the heater **87** such that the heater **87** comes to have a desired temperature corresponding to the characteristic of the sheet S and/or the printing speed.

Advantageous Effects

[0293] In the printer **1** according to Example 4 as well, the plug-equipped power cable inserted into the inlet **82***a* has no chance of hindering operations to be performed on relevant elements included in the printer **1**. Furthermore, since the door **20** is provided at the first end portion **1***b***1** while the inlet **82***a* is provided at the second end portion **1***b***2**, the door **20** that is in the closed position and the inlet **82***a* are arranged in such a manner as to overlap each other as viewed in the first direction.

[0294] In the first direction, at least part of the AC-DC power-source board **84** and at least part of the fixing-power-source board **82** are located closer to the second end portion **1***b***2** than the fixing device **70** and closer to the first end portion **1***b***1** than the inlet **82***a*. Therefore, power is supplied through a short path from the inlet **82***a* through the AC-DC power-source board **84** and the fixing-power-source board **82** to the fixing device **70**.

Example 5

[0295] Example 5 will now be described. In Example 5, elements having the same configurations as the elements described in any of Examples 1 to 4 are denoted by the same reference signs, and detailed description of such elements is omitted in principle.

[0296] FIG. **19** illustrates the positions of electric components included in a printer **1** according to Example 5.

[0297] The printer **1** according to Example 5 is different from the printer **1** according to Example 1 in that the connection board **83** is provided on the upper stay **93** while the control board **81** is provided on the first rear stay **92**. In Example 5, the connection board **83** is an exemplary upper board, and the control board **81** is an exemplary rear board.

[0298] In Example 5, the connector **83***a* of the connection board **83** is open toward the rear face of the printer **1**. In Example 5, the connection board **83** and the power source board **88** are connected to each other with a cable C**9** and a cable (flexible flat cable) FFC**4**, and the connection board **83** and the control board **81** are connected to each other with the cable C**1** and the cable (flexible flat cable) FFC**1**.

[0299] The cable C**9** is intended to supply electrical power that is used for activating elements included in the connection board **83** and in the control board **81**. A signal for controlling the power source board **88** that is outputted from the control board **81** is transmitted to the power source board **88** through the cable FFC**1** and the cable FFC**4**.

Advantageous Effects

[0300] In Example 5 as well, either of the control board **81** and the connection board **83** is regarded as an exemplary electric board provided on either of the upper stay **93** and the first rear stay **92**. If one of the control board **81** and the connection board **83** is defined as a first electric board, the other of the control board **81** and the connection board **83** is defined as an exemplary second electric board that is electrically connected to the first electric board.

[0301] In Example 5 as well, a satisfactory space for placing the electric board is provided on the rear-face side of the printer **1**, and the space is utilized for placing the electric board.

[0302] In the printer **1** according to Example 5, the control board **81** is located on the rear-face side of the printer **1**, the power source board **88** is located on the right-face side, and the connection board **83** is located on the top-face side. More specifically, the control board **81** is provided on the first rear stay **92**, the power source board **88** is provided on the right side plate **90**, and the connection board **83** is provided on the upper stay **93**. Thus, the control board **81**, the power source

board **88**, and the connection board **83** are placed close to each other. Furthermore, since the control board **81**, the power source board **88**, and the connection board **83** are not concentratedly located on a single side of the printer **1** but are located on different sides, spaces on the respective sides are utilized.

[0303] In Example 5, the power source board **88** is located closer in the vertical direction V to the upper end of the printer **1** than to the lower end of the printer **1**. Such an arrangement reduces the lengths of the cable C**9** and the cable FFC**4** that connect the connection board **83** and the power source board **88** to each other. The connection board **83** may be placed closer in the second direction to the right side plate **90** than to the left side plate **91**.

[0304] In the first direction, the connection board **83** is located closer to the second end portion **1***b***2** than to the first end portion **1***b***1**. Such an arrangement reduces the lengths of the cable C**1** and the cable FFC**1** that connect the control board **81** and the connection board **83** to each other.

[0305] In Example 5, a larger space is provided for the connection board **83** than for the control board **81**.

Example 6

[0306] Example 6 will now be described. In Example 6, elements having the same configurations as the elements described in any of Examples 1 to 5 are denoted by the same reference signs, and detailed description of such elements is omitted in principle.

[0307] FIG. **20** illustrates the positions of electric components included in a printer **1** according to Example 6. FIG. **21** illustrates a control board **86** according to Example 6.

[0308] The printer **1** according to Example 6 is obtained by replacing the control board **81** and the connection board **83** according to Example 1 with the control board **86**, which has both of the functions of the control board **81** and the connection board **83**.

[0309] The control board **86** will now be described with reference to FIG. **21**. The control board **86** includes an image controller B**83**, a body controller B**81**, and an image signal line S**1**, which connects the image controller B**83** and the body controller B**81** to each other.

[0310] The image controller B**83** includes a plurality of connectors **83***a*, which are connected to the external instrument **400**. The plurality of connectors **83***a* are each the same as the connector **83***a* according to Example 1.

[0311] The image controller B**83** includes a CPU and a drive circuit for the CPU. The image controller B**83** is configured to generate an image signal on the basis of a printing instruction received at any of the connectors **83***a*, and to transmit the image signal to the body controller B**81** through the image signal line S**1**.

[0312] The body controller B**81** is configured to execute the formation of an image on a sheet S on the basis of the image signal. The body controller B**81** includes a CPU, a drive circuit for the CPU, and a circuit configured to generate high voltages and apply the high voltages to the cartridges P and to the transfer unit **40**. The CPU of the body controller B**81** is responsible for the activation of the motors (M**1**, M**2**, and M**3**), the supply of power to the heater **87**, the control of the operation mode of the AC-DC converter, and so forth.

[0313] The body controller B**81** includes a connector **86***a*, which is intended to receive the cable FFC**3**. The body controller B**81** further includes a connector **86***b*, which is intended to receive the cable C**8**.

[0314] In Example 6, the connector **86***a* and the connector **86***b* are located closer in the second direction to the right side plate **90** than to the left side plate **91**. Such an arrangement reduces the lengths of the cable FFC**3** and the cable C**8**.

[0315] In Example 6, in the second direction, the image controller B**83** is located closer to the left side plate **91** than the body controller B**81**, and the body controller B**81** is located closer to the right side plate **90** than the image controller B**83**.

[0316] In the second direction, the connectors **83***a* are located closer to the left side plate **91** than to the right side plate **90**, and the connector **86***a* and the connector **86***b* are located closer to the right side plate **90** than to the left side plate **91**. Such an arrangement reduces the lengths of the cable FFC**3** and the cable C**8**.

[0317] In Example 6, the control board **86** is located on the rear-face side of the printer **1**. Alternatively, the control board **86** may be located on the top-face side. In that case, the control board **86** is provided on the upper stay **93**. That is, the control board **86** may be provided on either of the upper stay **93** and the first rear stay **92**.

Advantageous Effects

[0318] In Example 6 as well, the control board **86** is regarded as an exemplary first electric board provided on either of the upper stay **93** and the first rear stay **92**.

[0319] In the printer **1** according to Example 6, the control board **86** is located on the rear-face side or the top-face side of the printer **1**, and the power source board **88** is located on the right-face side. More specifically, the control board **86** is provided on the first rear stay **92** or the upper stay **93**, and the power source board **88** is provided on the right side plate **90**. Thus, the control board **86** and the power source board **88** are placed closer to each other. Furthermore, since the control board **86** and the power source board **88** are not concentratedly located on a single side of the printer **1** but are located on different sides, spaces on the respective sides are utilized.

Example 7

[0320] Example 7 will now be described. In Example 7, elements having the same configurations as the elements described in any of Examples 1 to 6 are denoted by the same reference signs, and detailed description of such elements is omitted in principle.

[0321] FIG. **22** illustrates the positions of electric components included in a printer **1** according to Example 7. FIGS. **23**A and **23**B illustrate how power is supplied to the tray unit **50**.

[0322] The printer **1** according to Example 7 is obtained by replacing the control board **81** according to Example 1 with a control board **89** and a high-voltage board **85**. The high-voltage board **85** includes a high-voltage-generating circuit, which is included in the control board **81** according to Example 1. The control board **89** has the same functions as the control board **81** according to Example 1 except the function of generating high voltages.

[0323] The control board **89** and the high-voltage board **85** are electrically connected to each other with a cable (flexible flat cable) FFC**4**. The control board **89** and the high-voltage board **85** are located adjacent to each other and are attached

to the upper stay **93** in Example 7. Such an arrangement reduces the length of the cable FFC**4**.

[0324] The high-voltage board **85** is configured to perform a switching operation on a transformer or the like (not illustrated) in such a manner as to generate a desired voltage by increasing the voltage to be inputted to the transformer. In Example 7, the high-voltage board **85** is configured to generate direct-current voltages of 1000 V and 300 V, an alternating-current voltage of 120 V, and so forth.

[0325] In Example 7, the voltage to be inputted to the high-voltage board **85** is 24 V and is supplied from the control board **89** through the cable FFC**4**. A signal for switching the transformer is transmitted from the CPU of the control board **89** through the cable FFC**4** to the high-voltage board **85**.

[0326] The high voltages generated by the high-voltage board **85** are supplied to the tray unit **50**. Referring now to FIGS. **23**A and **23**B, how such power is supplied from the high-voltage board **85** to the tray unit **50** will be described.

[0327] FIG. **23**A illustrates the high-voltage board **85**, the left side plate **91**, and the right side plate **90** that are seen from the top-face side. A connector **85***a*, illustrated in FIG. **23**A, is intended to receive the cable FFC**4**.

[0328] The high-voltage board **85** is provided at an end portion thereof with jumper wires (lead wires) JP1 and JP2. In Example 7, the jumper wires JP1 and JP2 are intended to supply high voltages as development biases to the developing rollers **63**. The jumper wires JP1 and JP2 extend over respective slits provided in the high-voltage board **85**.

[0329] The jumper wire JP1 is provided with a lead wire JP11. The jumper wire JP2 is provided with a lead wire JP22. The lead wire JP11 and the lead wire JP22 may have flexibility so as to be in pressure contact with the jumper wire JP1 and the jumper wire JP2, respectively. The jumper wire JP1 have the same potential as the lead wire JP11. The jumper wire JP2 has the same potential as the lead wire JP22.

[0330] As to be described below, the jumper wire JP1 is intended to supply a development bias to the yellow station, the magenta station, and the cyan station, whereas the jumper wire JP2 is intended to supply a development bias to the black station.

[0331] FIG. **23**B illustrates a section taken along line XXIIIB-XXIIIB given in FIG. **23**A, specifically, a section of the printer **1** that is seen from the left side.

[0332] As illustrated in FIG. **23**B, the tray unit **50** has electric contacts Ec (EcY, EcM, EcC, and EcK). The electric contacts EcY, EcM, EcC, and EcK are electrically connected to the developing rollers **63**Y, **63**M, **63**C, and **63**K, respectively.

[0333] The voltages generated by the high-voltage board **85** are applied to the electric contacts EcY, EcM, EcC, and EcK. More specifically, the voltages generated by the high-voltage board **85** are applied through the jumper wire JP1 and the lead wire JP11 to the electric contacts EcY, EcM, and EcC, and through the jumper wire JP2 and the lead wire JP22 to the electric contact EcK.

[0334] In the second direction, the electric contacts EcY, EcM, EcC, and EcK are located closer to the left side plate **91** than to the right side plate **90**. The high-voltage board **85** is located closer to the left side plate **91** than to the right side plate **90**. Such an arrangement reduces the lengths of the lead wires JP11 and JP22, and accordingly reduces the cost related to the lead wires JP11 and JP22 and the space for laying the lead wires JP11 and JP22.

[0335] The configurations according to Examples 1 to 7 may be combined as appropriate and according to need.

[0336] According to the present disclosure, the known arts can further be developed.

[0337] While the present disclosure has been described with reference to exemplary embodiments, it is to be understood that the invention is not limited to the disclosed exemplary embodiments. The scope of the following claims is to be accorded the broadest interpretation so as to encompass all such modifications and equivalent structures and functions.

[0338] This application claims the benefit of priority from Japanese Patent Application No. 2024-037323, filed Mar. 11, 2024, Japanese Patent Application No. 2024-037324, filed Mar. 11, 2024, and Japanese Patent Application No. 2024-037325, filed Mar. 11, 2024, which are each hereby incorporated by reference herein in their entirety.

What is claimed is:

1. An image forming apparatus configured to form an image on a recording material, the image forming apparatus comprising:

an apparatus body including a first end portion and a second end portion with respect to a first direction that is orthogonal to a vertical direction, the first end portion having an opening, the second end portion being located opposite the first end portion, the apparatus body including a first side wall located at one end of the apparatus body in a second direction that is orthogonal to the vertical direction and to the first direction;

a drawable unit movable relative to the first side wall in a direction intersecting the second direction, the drawable unit being movable between an inside position that is inside the apparatus body and an outside position that is outside the apparatus body through the opening;

a fixing device configured to heat the recording material and located closer to the first end portion than to the second end portion in the first direction;

a power source board configured to supply electrical power to the fixing device; and

an inlet electrically connected to the power source board and located closer to the second end portion than to the first end portion in the first direction,

wherein, in the first direction, at least part of the power source board is located closer to the second end portion than the fixing device is to the second end portion, and closer to the first end portion than the inlet is to the first end portion.

2. The image forming apparatus according to claim **1**,

wherein the power source board is provided on the first side wall.

3. The image forming apparatus according to claim **1**, further comprising:

a connecting member configured to electrically connect the power source board and the fixing device to each other,

wherein the power source board includes a connector to which the connecting member is connected, and

wherein, in the first direction, the connector is located closer to the fixing device than the inlet is to the fixing device.

4. The image forming apparatus according to claim **1**,
wherein the power source board has a function of converting an alternating-current voltage received via the inlet into a direct-current voltage.

5. The image forming apparatus according to claim **4**, further comprising:
a drive source configured to operate with a supply of the direct-current voltage,
wherein the drawable unit includes a rotary body configured to rotate with a driving force received from the drive source.

6. The image forming apparatus according to claim **1**,
wherein the inlet is open in a direction from the first end portion toward the second end portion.

7. The image forming apparatus according to claim **1**,
wherein the apparatus body includes a second side wall that is located opposite the first side wall in the second direction,
wherein the fixing device includes a receiving connector configured to receive electrical power from the power source board, and
wherein, in the second direction, the receiving connector is located closer to the first side wall than to the second side wall.

8. The image forming apparatus according to claim **7**, further comprising:
a supply connector electrically connected to the power source board and connectable to the receiving connector,
wherein, in the first direction, the supply connector is located closer to the first end portion than to the second end portion.

9. The image forming apparatus according to claim **1**,
wherein the power source board has a first power-source end and a second power-source end with respect to the first direction, the second power-source end being located opposite the first power-source end, and
wherein, in the first direction, the first power-source end is located closer to the first end portion than to the second end portion, and the second power-source end is located closer to the second end portion than to the first end portion.

10. The image forming apparatus according to claim **1**, further comprising:
an opening-and-closing member movable between a closed position where the opening-and-closing member covers the opening and an open position where the opening is exposed,
wherein, with respect to the second direction, a range where the opening-and-closing member is disposed and a range where the inlet is disposed overlap each other.

11. The image forming apparatus according to claim **1**,
wherein the apparatus body has an upper end and a lower end with respect to the vertical direction, and
wherein, in the vertical direction, the inlet is located closer to the upper end than to the lower end.

12. The image forming apparatus according to claim **1**,
wherein the drawable unit includes a tray and a cartridge, the cartridge being detachably attached to the tray.

13. An image forming apparatus configured to form an image on a recording material, the image forming apparatus comprising:
an apparatus body including a first end portion and a second end portion with respect to a first direction that is orthogonal to a vertical direction, the first end portion having an opening, the second end portion being located opposite the first end portion, the apparatus body including a first side wall; a second side wall; a rear wall; and an upper wall, the first side wall being located at one end of the apparatus body in a second direction that is orthogonal to the vertical direction and to the first direction, the second side wall being located at the other end of the apparatus body in the second direction, the rear wall being located at the second end portion, at least part of the rear wall being located between the first side wall and the second side wall in the second direction, at least part of the upper wall being located between the first side wall and the second side wall in the second direction;
a drawable unit movable relative to the first side wall in a direction intersecting the second direction, the drawable unit being movable between an inside position that is inside the apparatus body and an outside position that is outside the apparatus body through the opening, at least part of the drawable unit that is in the inside position being located below the upper wall;
a fixing device configured to heat the recording material and located closer to the first end portion than to the second end portion in the first direction;
a power source board provided on the first side wall; and
a first electric board provided on the rear wall or the upper wall.

14. The image forming apparatus according to claim **13**, further comprising:
a second electric board electrically connected to the first electric board,
wherein one of the first electric board and the second electric board is an upper board provided on the upper wall, and the other of the first electric board and the second electric board is a rear board provided on the rear wall.

15. The image forming apparatus according to claim **14**,
wherein one of the upper board and the rear board includes a connector that is connectable to an external device.

16. The image forming apparatus according to claim **15**, further comprising:
a drive source,
wherein the drawable unit includes a rotary body configured to be driven by the drive source, and
wherein the other of the upper board and the rear board is a control board configured to receive a signal outputted from the one of the upper board and the rear board and to control at least one of the drive source and the fixing device.

17. The image forming apparatus according to claim **14**,
wherein the upper board is located closer to the first side wall than to the second side wall in the second direction.

18. The image forming apparatus according to claim **13**, further comprising:
a drive source,
wherein the drawable unit includes a rotary body configured to be driven by the drive source, and
wherein the first electric board includes a connector connectable to an external device and is configured to control at least one of the drive source and the fixing device.

19. The image forming apparatus according to claim **13**, further comprising:

an electric contact provided on the drawable unit; and

a high-voltage board configured to generate a voltage to be applied to the electric contact,

wherein the electric contact is located closer to the second side wall than to the first side wall in the second direction, and

wherein the high-voltage board is located closer to the second side wall than to the first side wall in the second direction.

20. The image forming apparatus according to claim **19**, wherein the high-voltage board is provided on the upper wall.

21. The image forming apparatus according to claim **13**, wherein the power source board is configured to receive an alternating-current voltage supplied via an inlet.

22. The image forming apparatus according to claim **21**, wherein the power source board has a function of converting the alternating-current voltage into a direct-current voltage.

23. The image forming apparatus according to claim **13**, wherein the power source board is configured to supply electrical power to the fixing device.

24. The image forming apparatus according to claim **13**, wherein the drawable unit includes a tray and a cartridge, the cartridge being detachably attached to the tray.

25. An image forming apparatus configured to form an image on a recording material, the image forming apparatus comprising:

an apparatus body including a first end portion and a second end portion with respect to a first direction that is orthogonal to a vertical direction, the second end portion being located opposite the first end portion, the apparatus body including a first side wall located at one end of the apparatus body in a second direction that is orthogonal to the vertical direction and to the first direction;

an image forming unit configured to transfer an image to a recording material at a transfer portion, the image forming unit including a drawable unit movable between an inside position that is inside the apparatus body and an outside position that is outside the apparatus body, the drawable unit including a plurality of rotary bodies including a first rotary body and a second rotary body, the transfer portion being located closer to the first end portion than to the second end portion in the first direction;

a drive unit including a drive source and a drive train, the drive train being configured to transmit a driving force of the drive source to each of the first rotary body and the second rotary body, the drive unit being provided on the first side wall;

a fixing device configured to heat the recording material and located closer to the first end portion than to the second end portion in the first direction; and

a power source unit provided on the first side wall, the power source unit including a power source board and a casing that houses the power source board,

wherein when the drawable unit is in the inside position, the first rotary body is located closer to the first end portion than the second rotary body is to the first end portion in the first direction, and at least part of the first rotary body is located higher than the second rotary body in the vertical direction,

wherein the power source unit is located above the drive unit in the vertical direction, and

wherein as viewed in the vertical direction, the power source unit and the drive unit at least partially overlap each other.

26. The image forming apparatus according to claim **25**, wherein the drawable unit is movable in a direction intersecting the second direction.

27. The image forming apparatus according to claim **26**, wherein the drawable unit is movable between the inside position and the outside position through an opening provided at the first end portion.

28. The image forming apparatus according to claim **25**, wherein the image forming unit includes an intermediate transfer belt, and

wherein the first rotary body is a first photoconductor drum that is allowed to come into contact with the intermediate transfer belt, and the second rotary body is a second photoconductor drum that is allowed to come into contact with the intermediate transfer belt.

29. The image forming apparatus according to claim **28**, further comprising:

a transfer roller configured to form the transfer portion between the intermediate transfer belt and the transfer roller,

wherein when the drawable unit is in the inside position, at least part of the second photoconductor drum is located below the transfer roller in the vertical direction.

30. The image forming apparatus according to claim **25**, further comprising:

a discharge tray on which the recording material having an image formed is stackable,

wherein as viewed in the second direction, the discharge tray and the power source board overlap each other.

31. The image forming apparatus according to claim **25**, further comprising:

a fixing roller included in the fixing device; and

a fixing drive unit configured to drive the fixing roller,

wherein at least part of the fixing drive unit is located above the drive unit in the vertical direction.

32. The image forming apparatus according to claim **25**, further comprising:

a stacker on which the recording material is stackable;

a feeding roller configured to convey the recording material from the stacker; and

a feeding drive unit configured to drive the feeding roller,

wherein, with respect to the second direction, a position of the feeding drive unit and a position of the drive unit at least partially overlap each other.

33. The image forming apparatus according to claim **32**, wherein, with respect to the vertical direction, a position of the feeding drive unit and a position of the drive unit at least partially overlap each other.

34. The image forming apparatus according to claim **25**, wherein the power source board includes a first board end and a second board end with respect to the first direction, and

wherein the first board end is located closer to the first end portion than the second board end is to the first end

portion in the first direction, and the first board end is shorter than the second board end with respect to the vertical direction.

35. The image forming apparatus according to claim **25**, wherein the power source board is configured to receive an alternating-current voltage supplied via an inlet.

36. The image forming apparatus according to claim **35**, wherein the power source board has a function of converting the alternating-current voltage into a direct-current voltage.

37. The image forming apparatus according to claim **25**, wherein the drawable unit includes a tray and a cartridge, the cartridge being detachably attached to the tray.

38. An image forming apparatus configured to form an image on a recording material, the image forming apparatus comprising:

an apparatus body including a first end portion and a second end portion with respect to a first direction that is orthogonal to a vertical direction, the first end portion having an opening, the second end portion being located opposite the first end portion, the apparatus body including a first side wall located at one end of the apparatus body in a second direction that is orthogonal to the vertical direction and to the first direction;

a drawable unit movable relative to the first side wall in a direction intersecting the second direction, the drawable unit including a rotary body, the drawable unit being movable between an inside position that is inside the apparatus body and an outside position that is outside the apparatus body through the opening;

a drive unit including a drive source and a drive train, the drive train being configured to transmit a driving force of the drive source to the rotary body, the drive unit being provided on the first side wall;

a fixing device configured to heat the recording material and located closer to the first end portion than to the second end portion in the first direction; and

a power source unit provided on the first side wall, the power source unit including a power source board and a casing that houses the power source board,

wherein defining a direction of travel of the drawable unit moving from the inside position to the outside position as a drawing direction, the drawable unit that is in the inside position is inclined such that a downstream portion of the drawable unit in the drawing direction is located higher than an upstream portion of the drawable unit,

wherein the power source unit is located above the drive unit in the vertical direction, and

wherein as viewed in the vertical direction, the power source unit and the drive unit at least partially overlap each other.

* * * * *