US012400969B2

(12) **United States Patent**
Kim

(10) **Patent No.: US 12,400,969 B2**
(45) **Date of Patent: Aug. 26, 2025**

(54) **PACKAGE SUBSTRATES AND SEMICONDUCTOR PACKAGES HAVING THE SAME**

(71) Applicant: **SAMSUNG ELECTRONICS CO., LTD.**, Suwon-si (KR)

(72) Inventor: **Hyejin Kim**, Suwon-si (KR)

(73) Assignee: **SAMSUNG ELECTRONICS CO., LTD.**, Suwon-si (KR)

(*) Notice: Subject to any disclaimer, the term of this patent is extended or adjusted under 35 U.S.C. 154(b) by 422 days.

(21) Appl. No.: **17/938,665**

(22) Filed: **Oct. 6, 2022**

(65) **Prior Publication Data**

US 2023/0197626 A1 Jun. 22, 2023

(30) **Foreign Application Priority Data**

Dec. 16, 2021 (KR) 10-2021-0181034

(51) **Int. Cl.**
H01L 23/544 (2006.01)
H01L 23/00 (2006.01)
(Continued)

(52) **U.S. Cl.**
CPC ***H01L 23/544*** (2013.01); ***H01L 23/49811*** (2013.01); ***H01L 23/49822*** (2013.01);
(Continued)

(58) **Field of Classification Search**
CPC H01L 23/544; H01L 23/49811; H01L 23/49822; H01L 23/36
See application file for complete search history.

(56) **References Cited**

U.S. PATENT DOCUMENTS

6,324,068 B1 11/2001 Shimizu et al.
7,129,146 B2 10/2006 Hsu
(Continued)

FOREIGN PATENT DOCUMENTS

JP 2004-214700 7/2004
KR 10-0173249 10/1998
(Continued)

OTHER PUBLICATIONS

Notice of Allowance dated Jun. 19, 2025 issued in corresponding Korean Patent Application No. 10-2021-0181034.

Primary Examiner — Thao P Le
(74) *Attorney, Agent, or Firm* — Morgan, Lewis & Bockius LLP

(57) **ABSTRACT**

A package substrate includes at least one substrate base, a plurality of wiring patterns disposed on an upper surface and a lower surface of the at least one substrate base and extending in a horizontal direction, a plurality of wiring vias extending in a vertical direction through the at least one substrate base and electrically connecting two wiring patterns positioned at different vertical levels among the plurality of wiring patterns, to each other, and an upper surface solder resist layer having a plurality of first upper surface openings extending from the upper surface to the lower surface, and at least two upper surface openings having a second opening width as a horizontal width that is greater than a first opening width which is a horizontal width of the plurality of first upper surface openings, the upper surface solder resist layer covering an upper surface of the at least one substrate base.

20 Claims, 19 Drawing Sheets

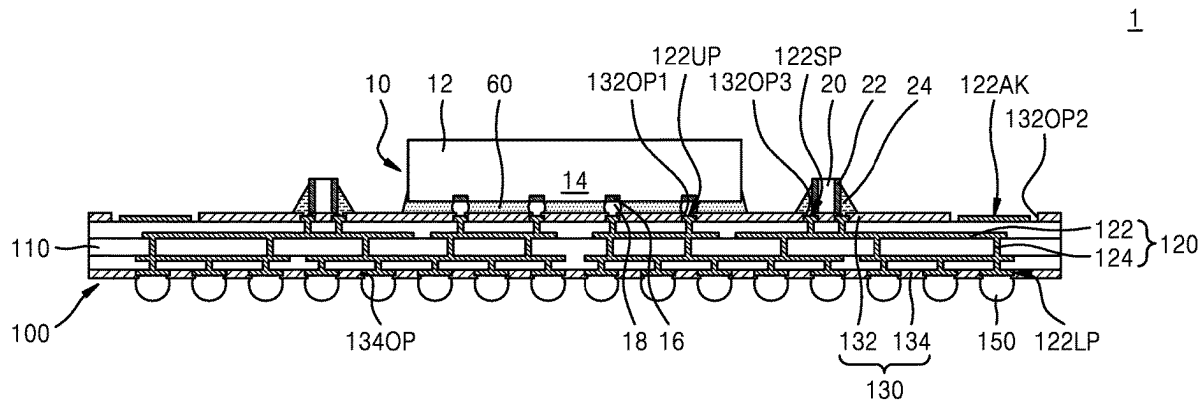

(51) **Int. Cl.**
H01L 23/498 (2006.01)
H01L 23/36 (2006.01)

(52) **U.S. Cl.**
CPC .. ***H01L 23/49827*** (2013.01); ***H01L 23/49838*** (2013.01); ***H01L 24/16*** (2013.01); *H01L 23/36* (2013.01); *H01L 24/29* (2013.01); *H01L 24/32* (2013.01); *H01L 24/33* (2013.01); *H01L 24/73* (2013.01); *H01L 2223/54426* (2013.01); *H01L 2224/16227* (2013.01); *H01L 2224/2929* (2013.01); *H01L 2224/29386* (2013.01); *H01L 2224/32225* (2013.01); *H01L 2224/33181* (2013.01); *H01L 2224/73204* (2013.01); *H01L 2224/73253* (2013.01)

(56) **References Cited**

U.S. PATENT DOCUMENTS

7,960,837	B2	6/2011	Inoue	
8,232,841	B1	7/2012	Ozawa et al.	
10,867,974	B2	12/2020	Kim	
2015/0147846	A1	5/2015	Feger et al.	
2016/0367277	A1	12/2016	Nagai et al.	
2018/0151495	A1	5/2018	Hsu et al.	
2021/0005561	A1	1/2021	Hu et al.	
2021/0407923	A1*	12/2021	Kim	H01L 25/16
2022/0359323	A1*	11/2022	Huang	H01L 23/31
2022/0384320	A1*	12/2022	Lee	H01L 23/642
2024/0145437	A1*	5/2024	Hwang	H01L 24/32
2024/0321775	A1*	9/2024	Lee	H01L 23/562
2025/0006619	A1*	1/2025	Lee	H01L 23/49822
2025/0046769	A1*	2/2025	Choi	H01L 24/20

FOREIGN PATENT DOCUMENTS

KR	10-2006-0026191	3/2006
KR	10-2009-0063104 A	6/2009
KR	10-2020-0004112 A	1/2020

* cited by examiner

FIG. 1

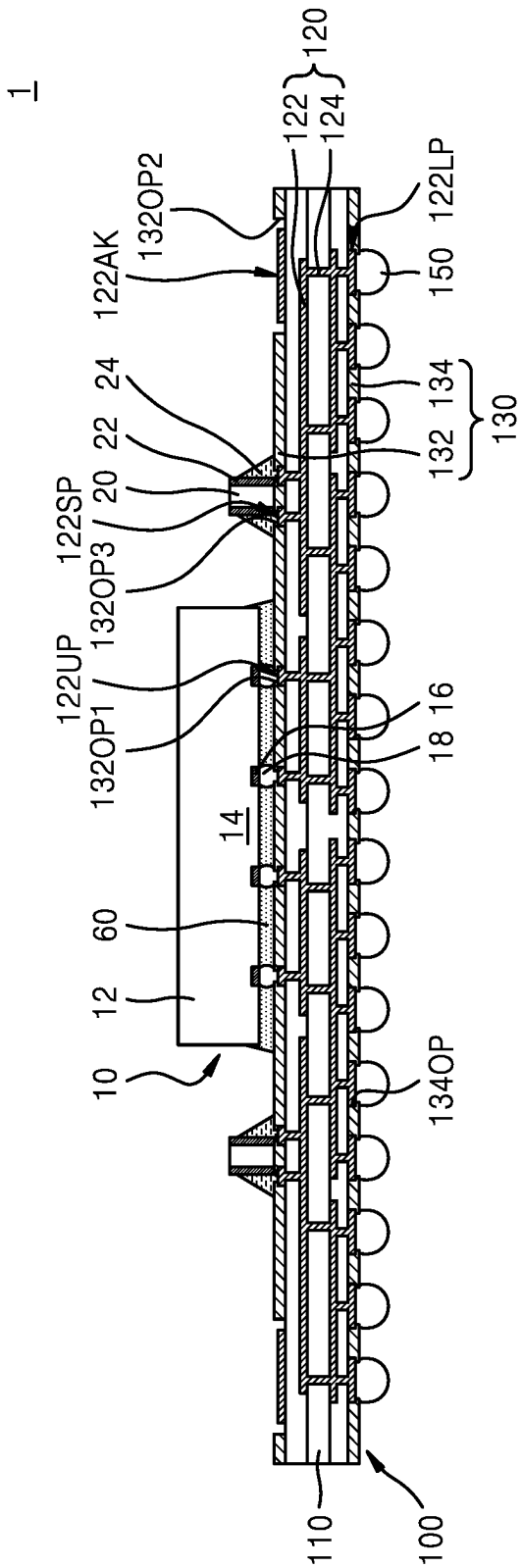
1
120
122
124
122LP
150
132OP2
122AK
24
22
20
122SP
132OP3
122UP
132OP1
134
132
130
16
18
14
60
12
10
134OP
110
100

FIG. 2

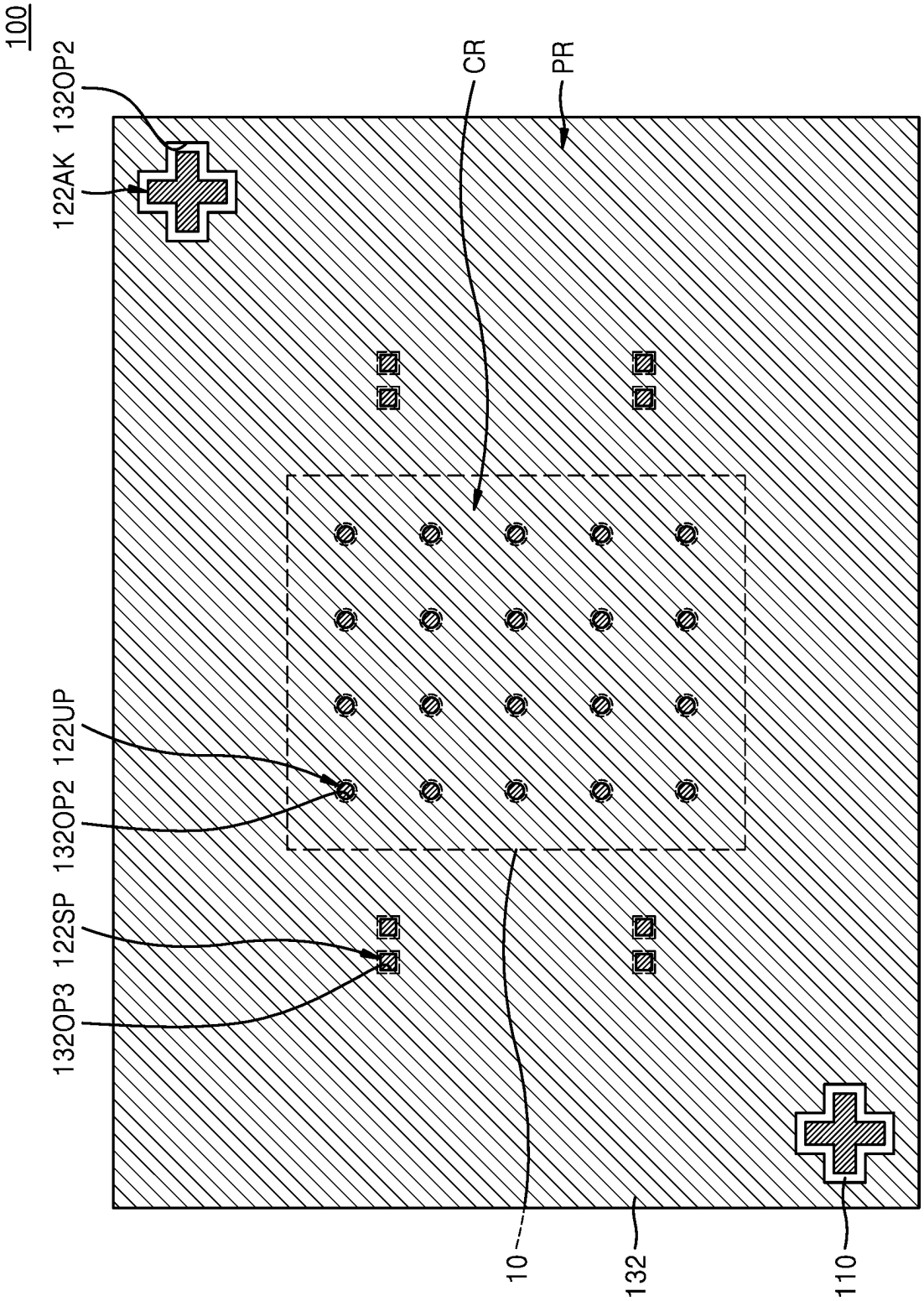

FIG. 3

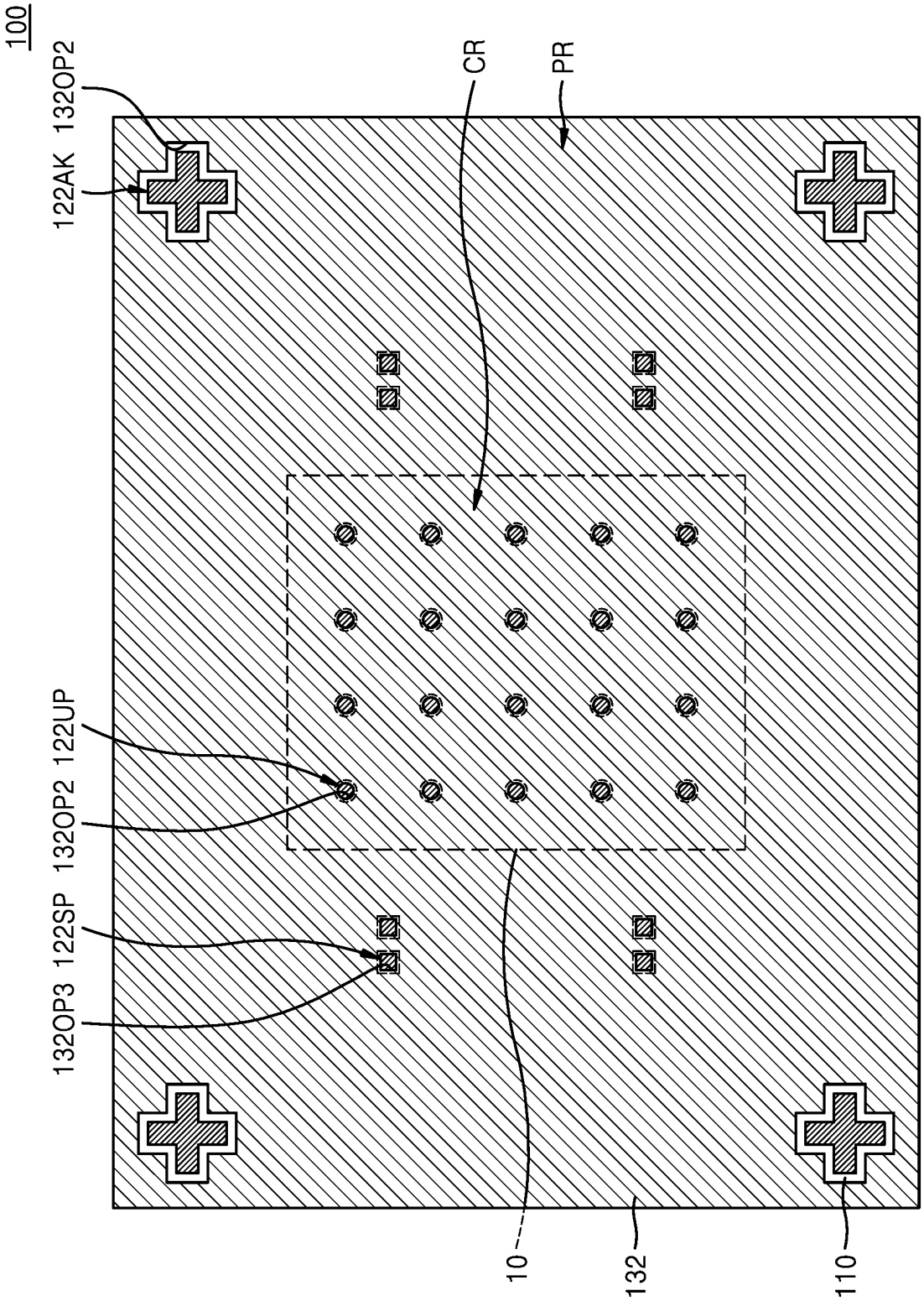

FIG. 4A

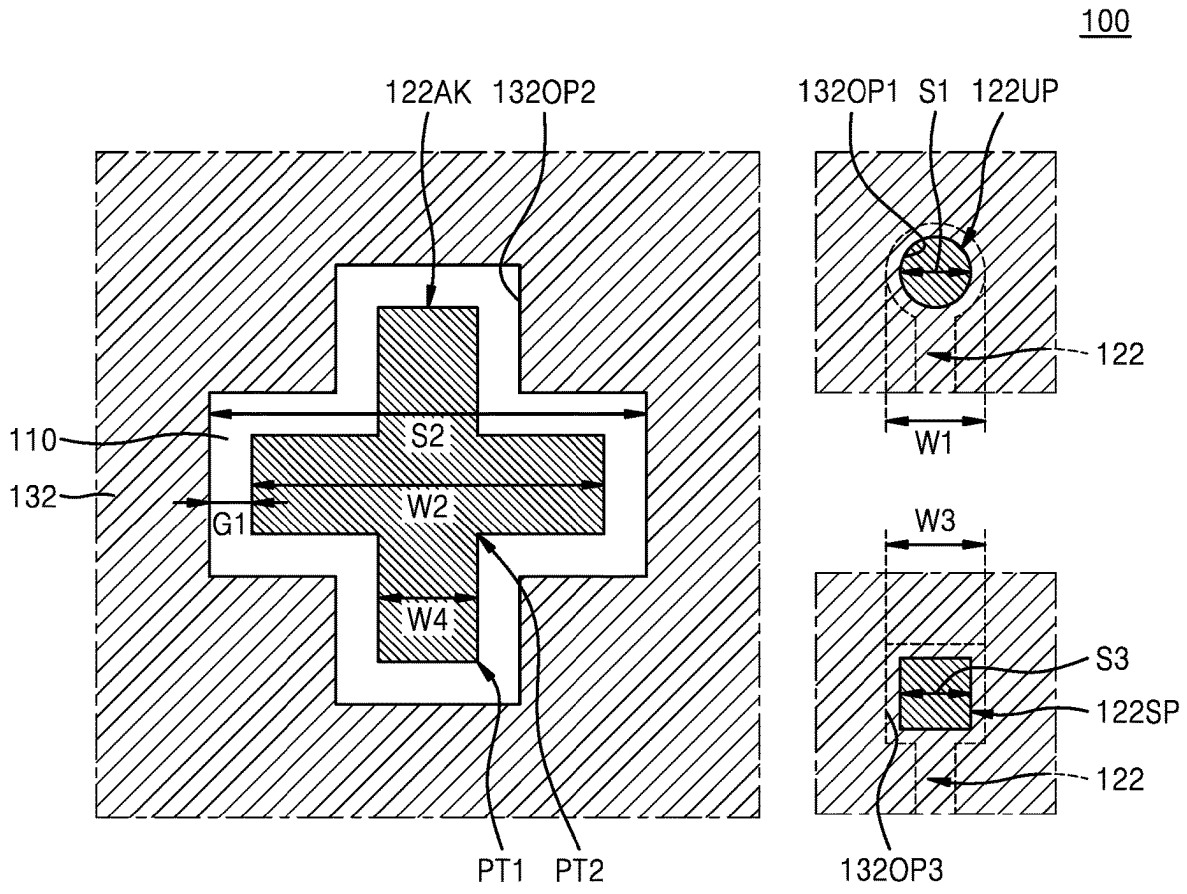
100
122AK
132OP2
132OP1
S1
122UP
122
W1
110
132
S2
W2
G1
W4
W3
S3
122SP
122
PT1
PT2
132OP3

FIG. 4B

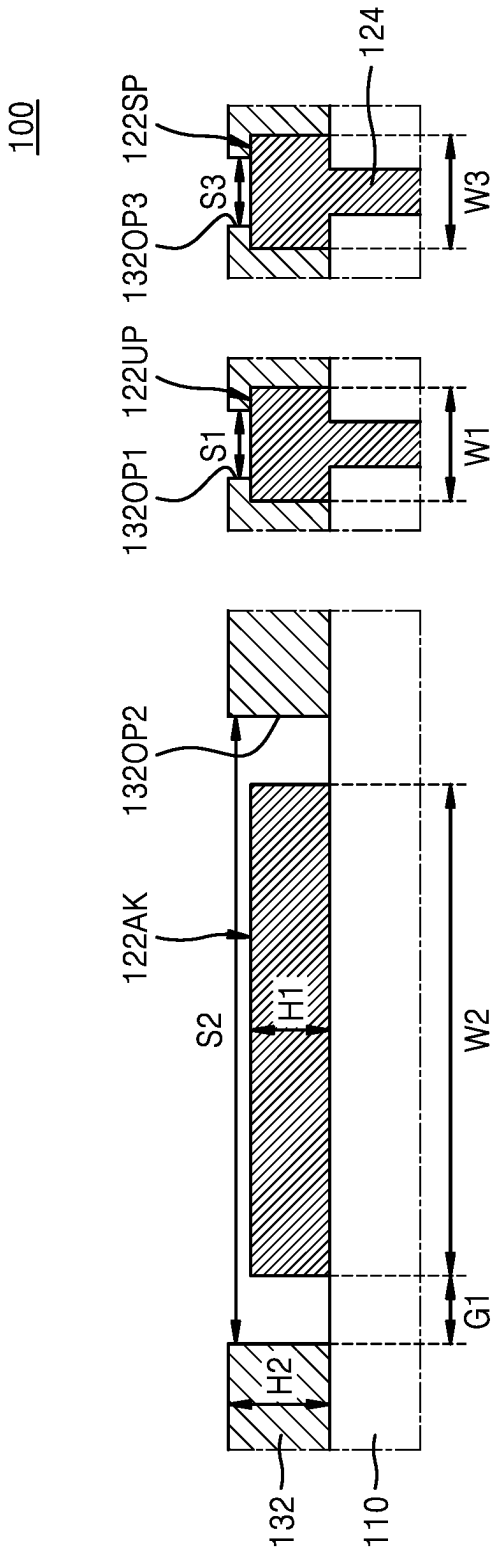
100
122SP
124
132OP3
S3
W3
122UP
132OP1
S1
W1
132OP2
122AK
S2
H1
W2
G1
H2
132
110

FIG. 5A

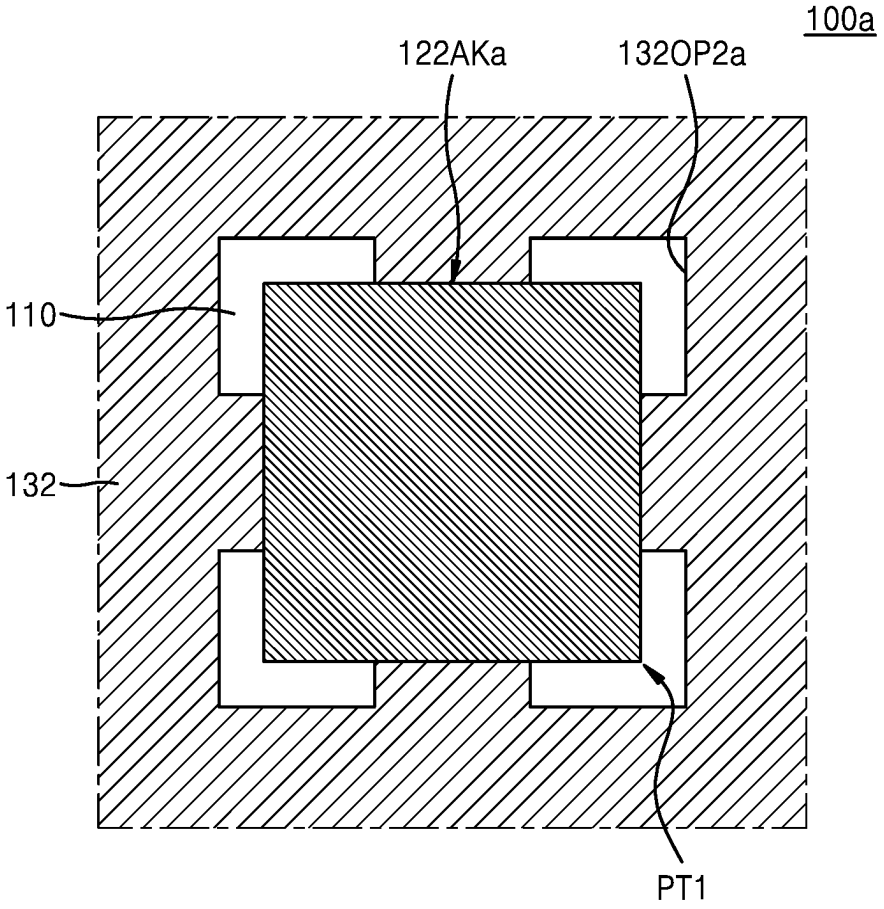

FIG. 5B

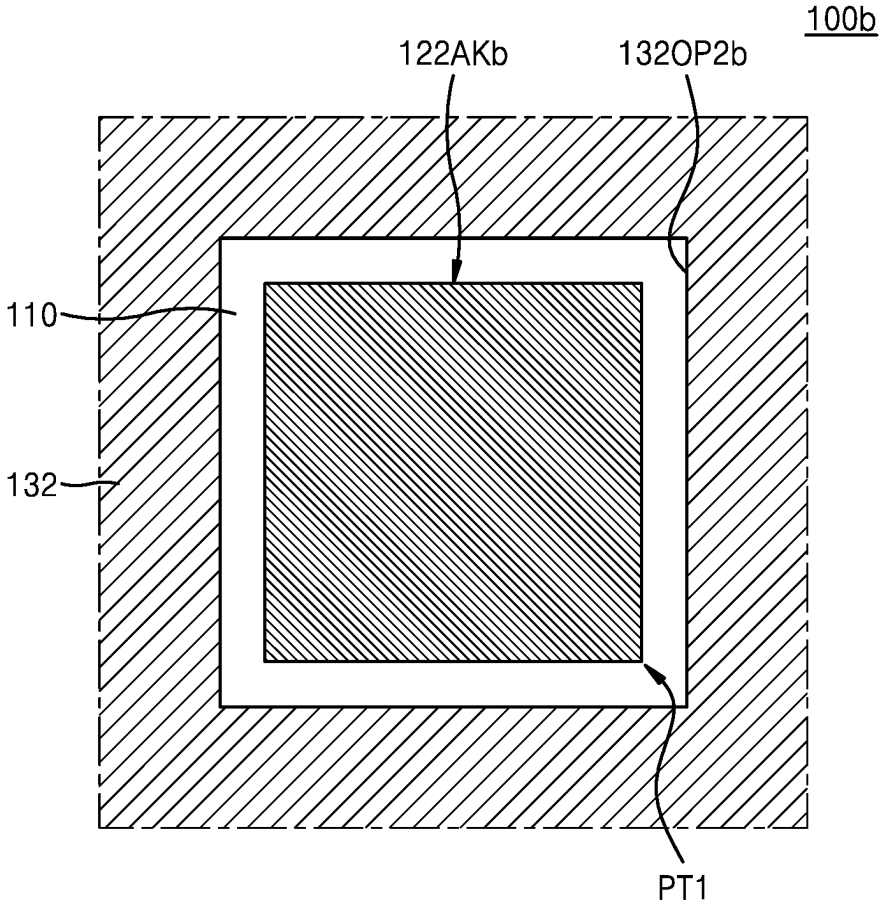

FIG. 5C

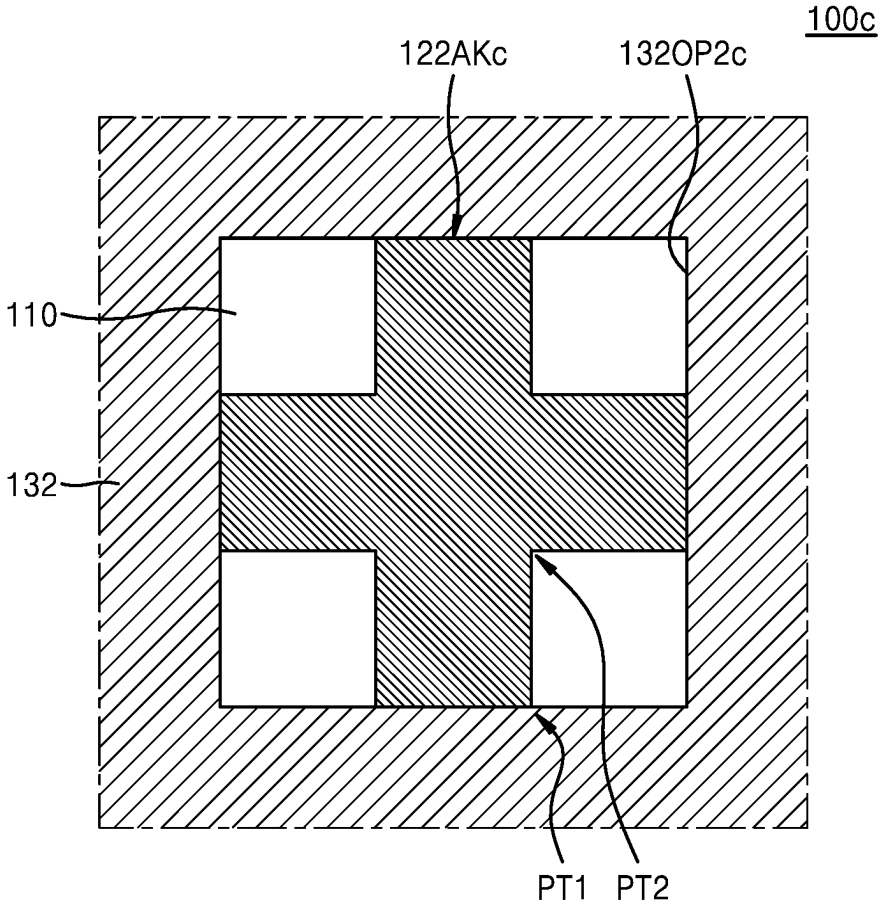

FIG. 5D

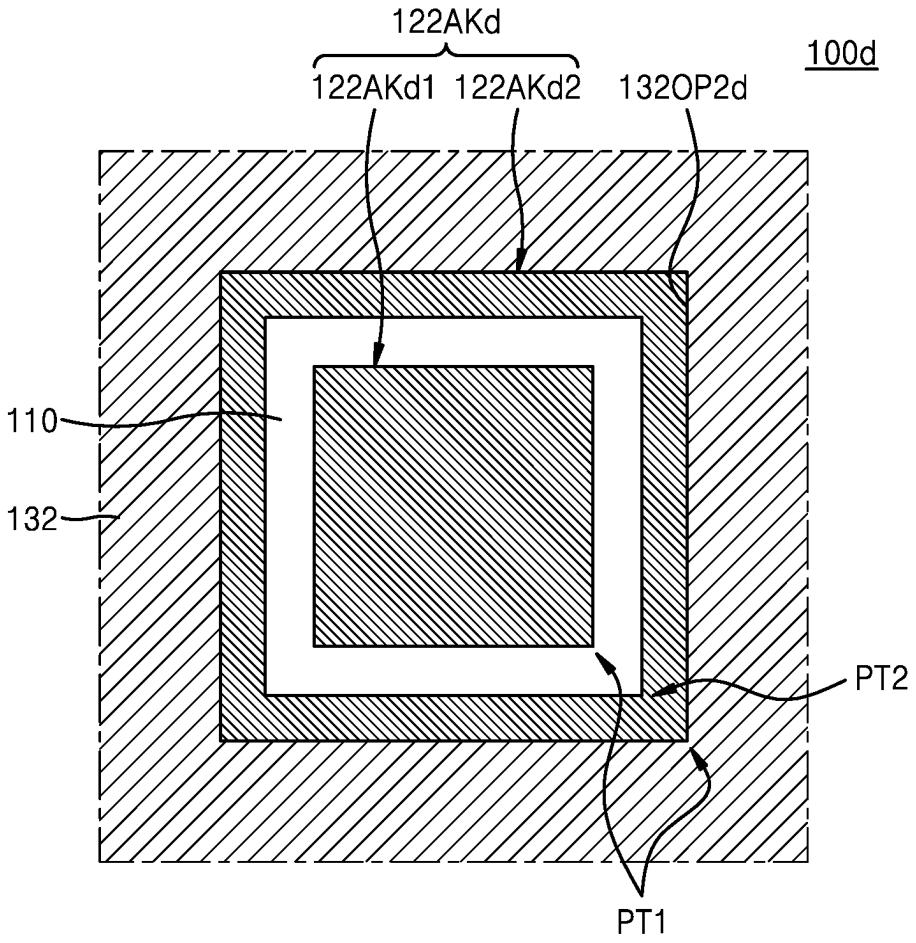

FIG. 5E

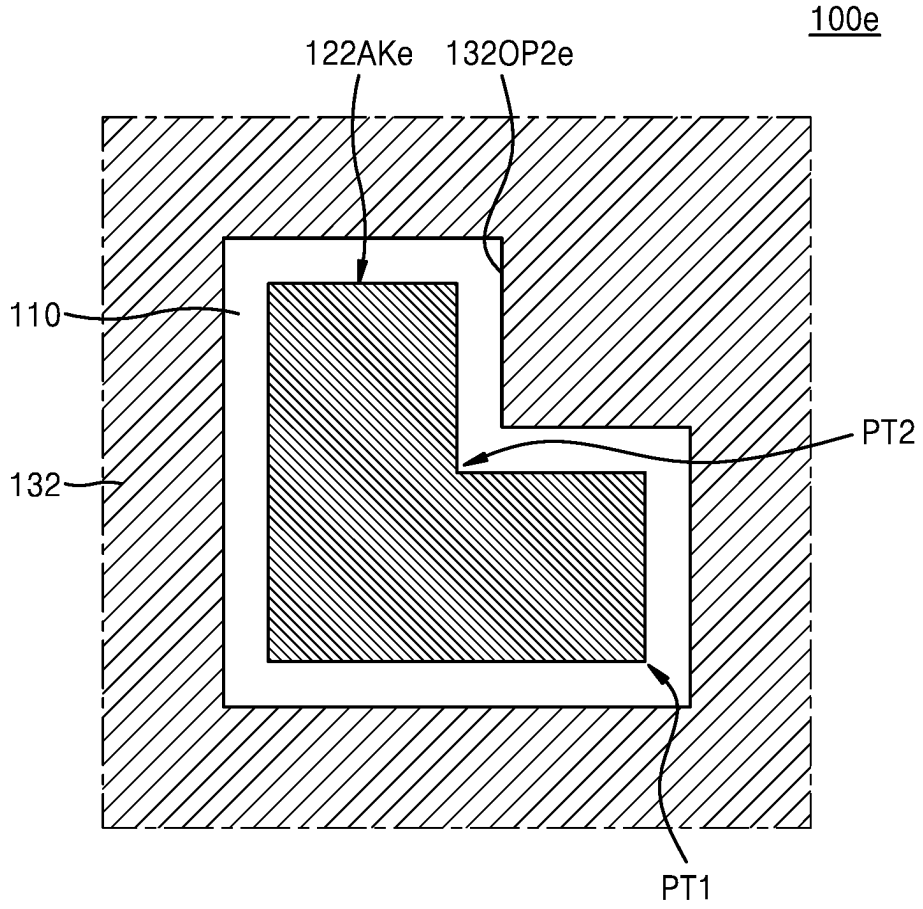

FIG. 6A

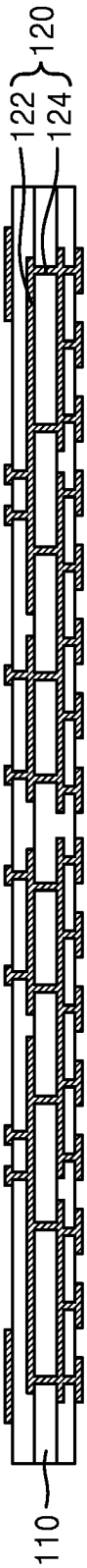

FIG. 6B

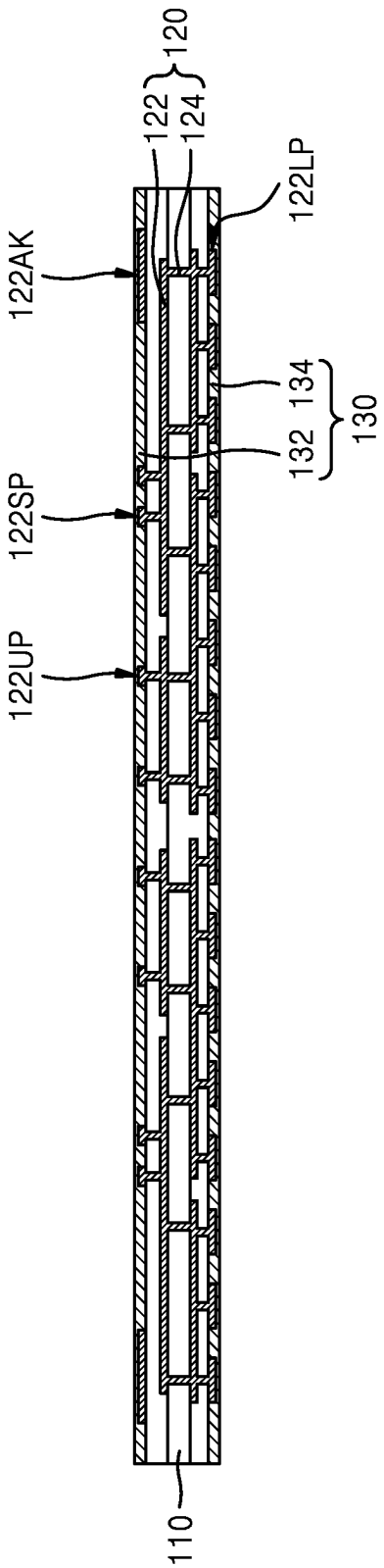

FIG. 6C

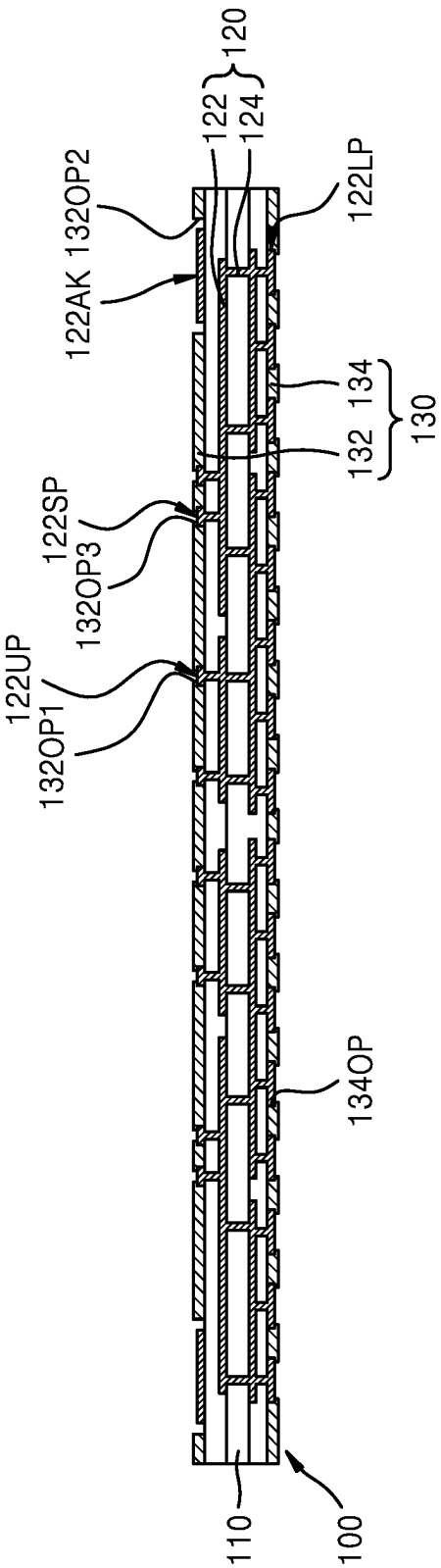
120
122
124
122LP
132OP2
122AK
134
130
132
122SP
132OP3
122UP
132OP1
134OP
110
100

FIG. 6D

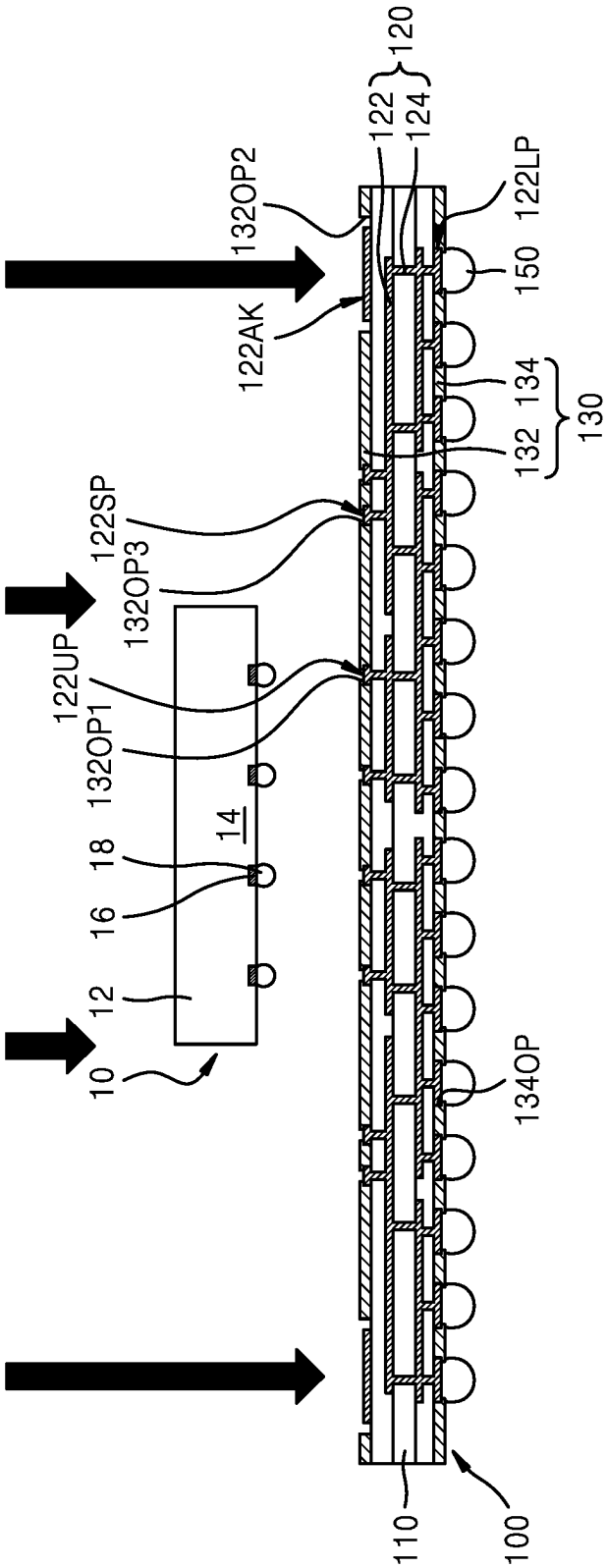
10
12
16
18
14
132OP1
122UP
132OP3
122SP
122AK
132OP2
122
124
120
122LP
150
134
132
130
134OP
110
100

FIG. 6E

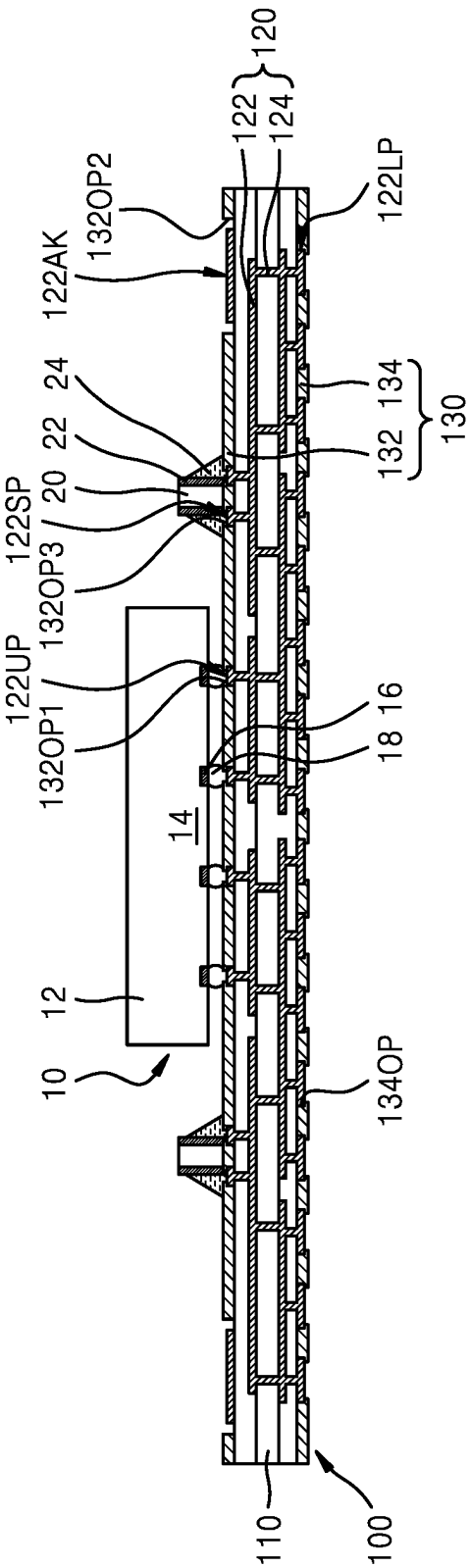
120
122
124
122LP
132OP2
122AK
24
22
20
122SP
132OP3
122UP
132OP1
134
132
130
16
18
14
12
10
134OP
110
100

FIG. 7

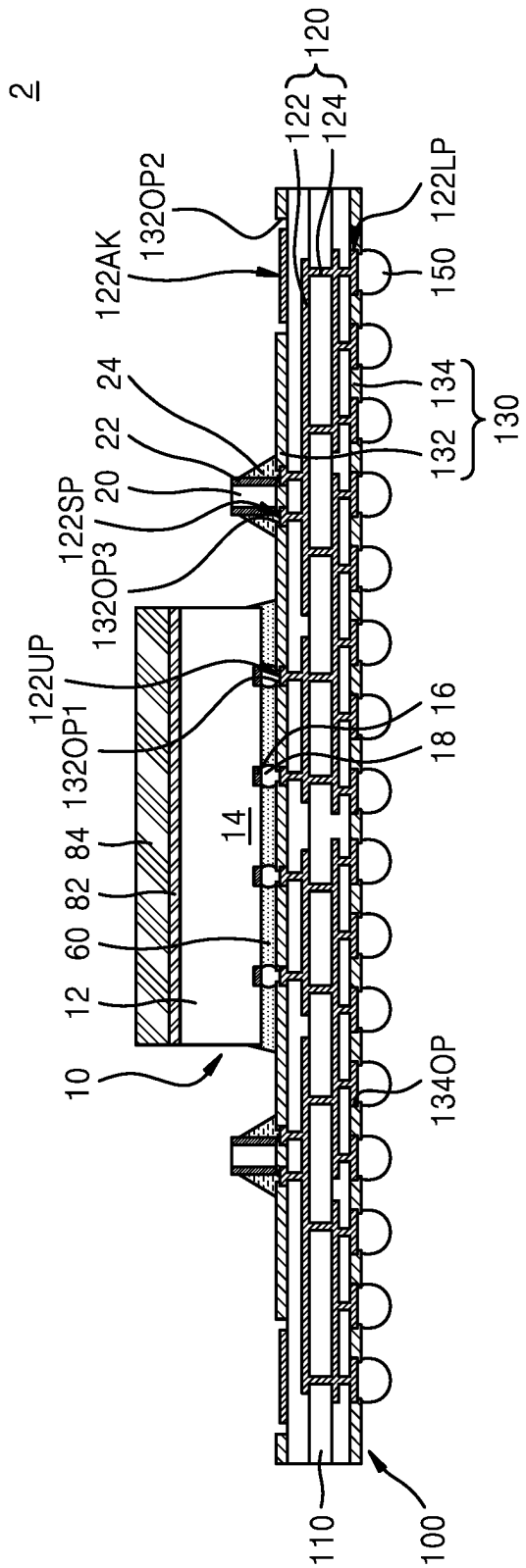
2
120
122
124
122LP
150
134
130
132
132OP2
122AK
24
22
20
122SP
132OP3
122UP
132OP1
84
82
60
12
10
14
16
18
134OP
110
100

FIG. 8

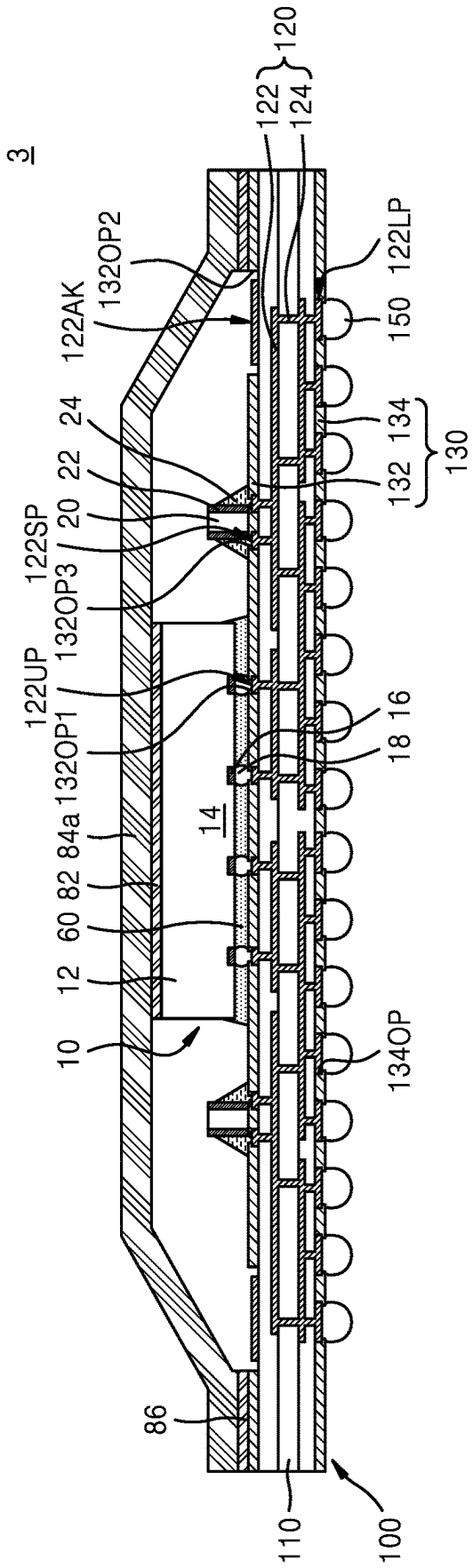
3
120
122
124
122LP
150
134
130
132
132OP2
122AK
24
22
20
122SP
132OP3
122UP
132OP1
84a
82
60
12
10
14
16
18
134OP
86
110
100

FIG. 9

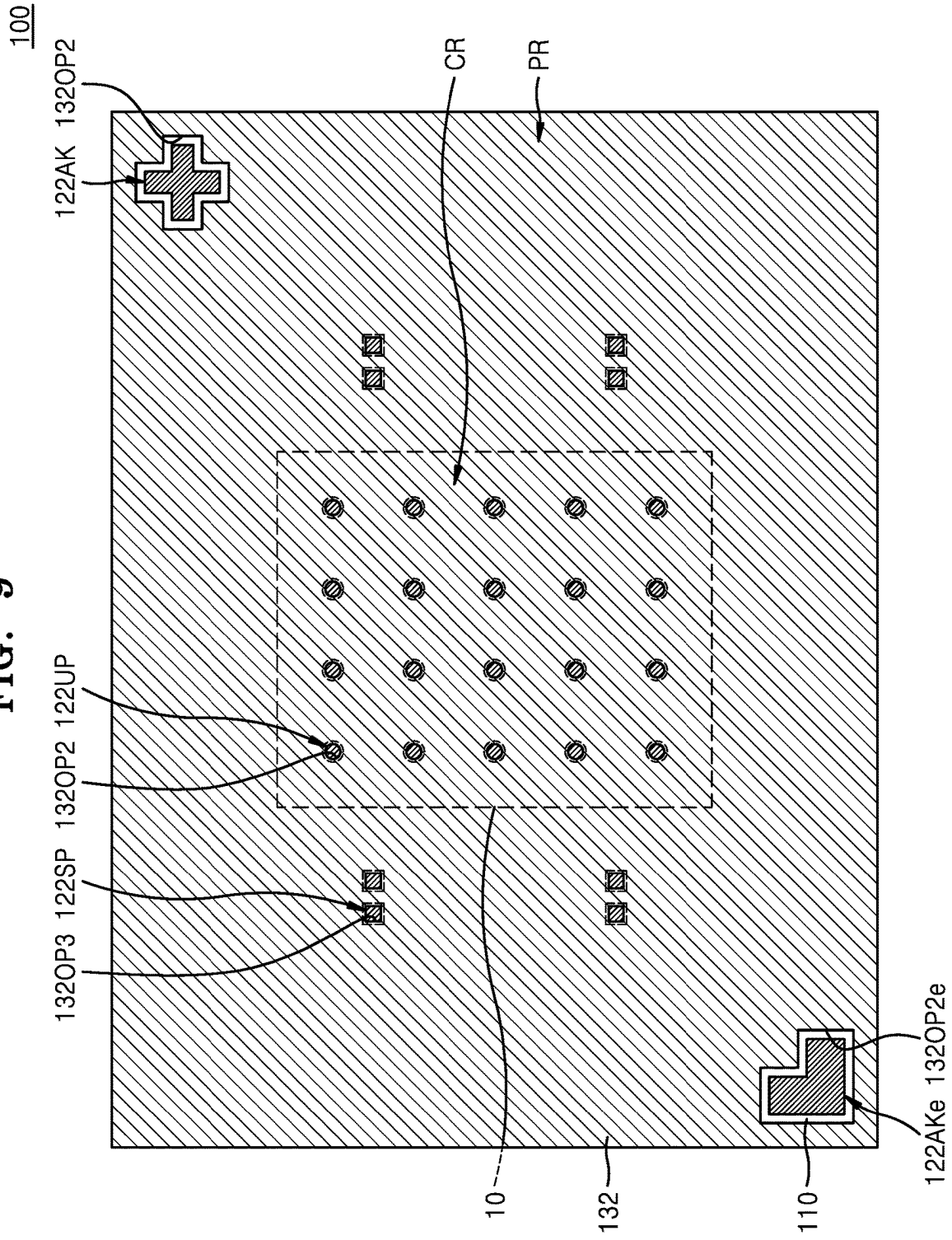
100
122AK
132OP2
CR
PR
132OP3
122SP
132OP2
122UP
10
132
110
122AKe
132OP2e

FIG. 10

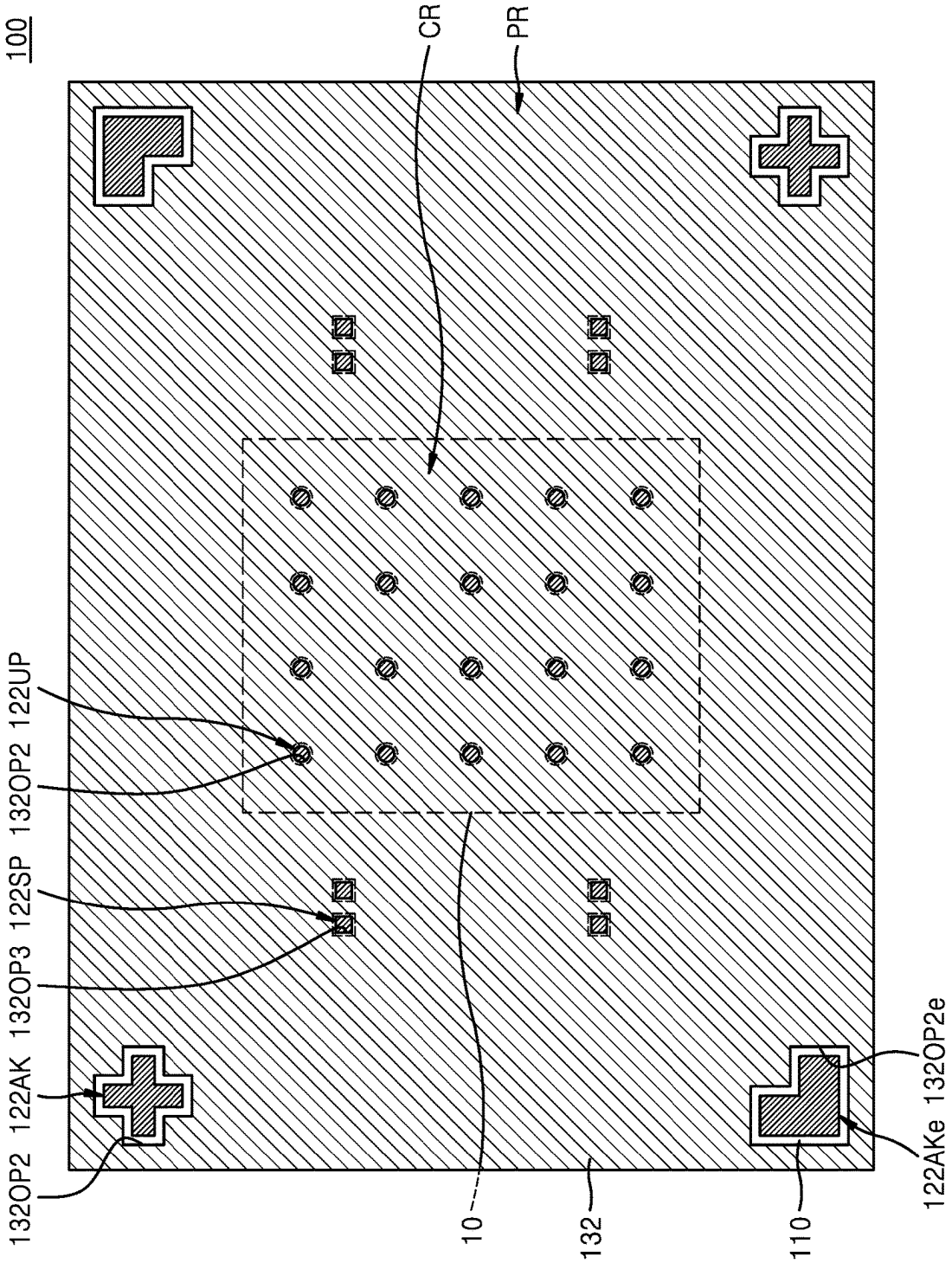
100
CR
PR
122UP
132OP2
122SP
132OP3
122AK
132OP2
10
132
110
122AKe
132OP2e

PACKAGE SUBSTRATES AND SEMICONDUCTOR PACKAGES HAVING THE SAME

CROSS-REFERENCE TO RELATED APPLICATION

This application is based on and claims priority under 35 U.S.C. § 119 to Korean Patent Application No. 10-2021-0181034, filed on Dec. 16, 2021 in the Korean Intellectual Property Office, the disclosure of which is incorporated by reference herein in its entirety.

TECHNICAL FIELD

The disclosure relates to semiconductor packages and, more particularly, to a package substrate and a semiconductor package including the package substrate.

DISCUSSION OF THE RELATED ART

In accordance with the rapid development of the electronics industry and the needs of users, electronic devices are becoming smaller, more multifunctional, and larger in capacity. Accordingly, highly integrated semiconductor chips are being designed, and the number and arrangement density of connection terminals for input/output (I/O) are increasing in highly integrated semiconductor chips.

This high density of connection terminals may render semiconductor packages difficult to mount within electronic devices.

SUMMARY

A package substrate includes at least one substrate base, a plurality of wiring patterns disposed on upper and lower surfaces of the at least one substrate base and extending in a horizontal direction, a plurality of wiring vias extending in a vertical direction through the substrate base and electrically connecting two wiring patterns positioned at different vertical levels among the plurality of wiring patterns to one another, and an upper surface solder resist layer having a plurality of first upper surface openings extending from the upper surface to the lower surface, and at least two upper surface openings having a second opening width as a horizontal width that is greater than a first opening width which is a horizontal width of the plurality of first upper surface openings. The upper surface solder resistant layer covers an upper surface of the at least one substrate base. The plurality of wiring patterns includes a plurality of upper surface connection pads disposed in the plurality of first upper surface openings on the upper surface of the at least one substrate base and having a circular or elliptical shape, in a plan view, and at least two alignment patterns disposed in the at least two second upper surface openings on the upper surface of the at least one substrate base and having a vertex shape, in the plan view. Tn the first upper surface opening, a portion of the upper surface of the at least one substrate base is entirely covered by the upper surface connection pad. In the second upper surface opening, a portion of the upper surface of the at least one substrate base is covered by the alignment pattern and a remaining portion of the upper surface of the at least one substrate base is not covered by the alignment pattern.

A semiconductor package includes a package substrate having a chip attachment region and a peripheral region surrounding the chip attachment region, in a plan view. A semiconductor chip having first and second surfaces opposite to each other and including a plurality of chip pads is disposed on the first surface, the first surface facing an upper surface of the package substrate and attached to the chip attachment region of the package substrate. A plurality of chip connection members is attached to the plurality of chip pads. The package substrate includes at least one substrate base. An upper surface solder resist layer covers an upper surface of the at least one substrate base, having a plurality of first upper surface openings disposed in the chip attachment region and a second opening width that is greater than a first opening width that is a horizontal width of the plurality of first upper surface openings as a horizontal width, and having at least two upper surface openings disposed in the peripheral region. A plurality of upper surface connection pads is disposed in the plurality of first upper surface openings on the upper surface of the at least one substrate base and having a circular or elliptical shape, in a plan view, and having the plurality of chip connection members attached thereto. At least two alignment patterns are disposed in the at least two second upper surface openings on the upper surface of the at least one substrate base and having a shape, in the plan view, with at least three vertices. the upper surface solder resist layer covers all side surfaces of the plurality of upper surface connection pads, but does not cover at least a portion of side surfaces of the at least two alignment patterns.

A semiconductor package includes a package substrate having a chip attachment region and a peripheral region surrounding the chip attachment region, in a plan view. A semiconductor chip has first and second surfaces opposite to each other and includes a plurality of chip pads disposed on the first surface. The first surface faces an upper surface of the package substrate and is attached to the chip attachment region of the package substrate. A plurality of chip connection members is attached to the plurality of chip pads. The package substrate includes at least one substrate base, an upper surface solder resist layer covering an upper surface of the at least one substrate base and having a plurality of first upper surface openings disposed in the chip attachment region and at least two upper surface openings having a second opening width that is greater than a first opening width that is a horizontal width of the plurality of first upper surface openings and disposed in the peripheral region. A lower surface solder resist layer covers the lower surface of the at least one substrate base and has a plurality of lower surface openings disposed in the chip attachment region and the peripheral region. A plurality of upper surface connection pads is disposed in the plurality of first upper surface openings on the upper surface of the at least one substrate base and having a circular or elliptical shape, in a plan view, and having the plurality of chip connection members attached thereto. At least two alignment patterns are disposed in the at least two second upper surface openings on the upper surface of the at least one substrate base and have a shape, in a plan view, with at least three vertices. A plurality of lower surface connection pads is disposed in the plurality of lower surface openings on the lower surface of the at least one substrate base. A plurality of external connection terminals is attached to the plurality of lower surface connection pads. The upper surface solder resist layer covers all side surfaces of the plurality of upper surface connection pads, but does not cover at least a portion of side surfaces of the at least two alignment patterns. A portion of a side surface of the upper surface solder resist layer defining the second upper surface opening and a portion of the side surface of the alignment pattern are spaced apart from each

other by a first interval that is less than the first opening width in a horizontal direction.

BRIEF DESCRIPTION OF THE DRAWINGS

Embodiments of the inventive concept will be more clearly understood from the following detailed description taken in conjunction with the accompanying drawings, in which:

FIG. **1** is a cross-sectional view showing a semiconductor package including a package substrate according to the inventive concept;

FIG. **2** is a plan view taken from above a package substrate according to the inventive concept;

FIG. **3** is a plan view taken from above a package substrate according to the inventive concept;

FIG. **4**A is an enlarged plan view taken from above part of a package substrate according to the inventive concept, and FIG. **4**B is a cross-sectional view showing part of a package substrate according to the inventive concept;

FIGS. **5**A to **5**E are enlarged plan views taken from above part of a package substrate, according to the inventive concept;

FIGS. **6**A to **6**E are cross-sectional views illustrating a package substrate and a method of manufacturing a semiconductor package including a package substrate, according to the inventive concept;

FIG. **7** is a cross-sectional view showing a semiconductor package including a package substrate according to the inventive concept;

FIG. **8** is a cross-sectional view showing a semiconductor package including a package substrate according to the inventive concept;

FIG. **9** is a plan view taken from above a package substrate according to the inventive concept; and

FIG. **10** is a plan view taken from above a package substrate according to the inventive concept.

DETAILED DESCRIPTION OF THE EMBODIMENTS

In describing embodiments of the disclosure illustrated in the drawings, specific terminology is employed for sake of clarity. However, the disclosure is not necessarily intended to be limited to the specific terminology so selected, and it is to be understood that each specific element includes all technical equivalents which operate in a similar manner.

FIG. **1** is a cross-sectional view showing a semiconductor package including a package substrate according to the inventive concept.

Referring to FIG. **1**, a semiconductor package **1** includes a package substrate **100** and a semiconductor chip **10** attached to an upper surface of the package substrate **100**. The semiconductor package **1** may be, for example, a Flip Chip Ball Grid Array (FCBGA) package or a Flip Chip Package Ball Grid Array (FCPBGA) package.

In some embodiments, the package substrate **100** may be a printed circuit board (PCB). For example, the package substrate **100** may be a double-sided printed circuit board or a multi-layer printed circuit board. The package substrate **100** may include at least one substrate base **110** and a substrate wiring structure **120**. The substrate wiring structure **120** may include a plurality of wiring patterns **122** disposed on the upper and lower surfaces of the substrate base **110** and/or disposed inside the substrate base **110** and extending in the horizontal direction, and a plurality of wiring vias **124** penetrating at least a portion of the at least one substrate base **110** and extending in a vertical direction electrically connecting two wiring patterns **122** located at different vertical levels, among the plurality of wiring patterns **122**, to each other. In some embodiments, the package substrate **100** may include a plurality of stacked substrate bases **110**, and the plurality of wiring patterns **122** may be disposed on the upper and lower surfaces of each of the plurality of substrate bases **110**.

In this specification, the plurality of substrate bases **110** may include either only a single substrate base **110** or multiple substrate bases **110** stacked upon each other and, as used herein, the phrase "the plurality of substrate base **110**" may refer to a sole substrate base **110**. Similarly, the phrase "the substrate base **110**" may refer to a plurality of substrate bases **110**.

The package substrate **100** may further include a solder resist layer **130** covering the upper and lower surfaces of the at least one substrate base **110**. The solder resist layer **130** may include an upper surface solder resist layer **132**, covering the upper surface of the at least one substrate base **110**, and a lower surface solder resist layer **134**, covering the lower surface of the at least one substrate base **110**.

Some of the wiring patterns **122** disposed on the upper surface of the at least one substrate base **110** might not be covered by the upper surface solder resist layer **132**. For example, the plurality of upper surface connection pads **122**UP, at least two device connection pads **122**SP, and at least two alignment patterns **122**AK, which are some of the wiring patterns **122** disposed on the upper surface of at least one substrate base **110**, might not be covered by the upper surface solder resist layer **132**. In some embodiments, the upper surface solder resist layer **132** may cover the side surfaces of the plurality of upper surface connection pads **122**UP and the at least two device connection pads **122**SP, but might not cover the upper surface. In some embodiments, the upper surface solder resist layer **132** might not cover upper surfaces and side surfaces of the at least two alignment patterns **122**AK.

A plurality of chip connection members **18** may be attached to the plurality of upper surface connection pads **122**UP. The plurality of chip connection members **18** may completely cover the surfaces, for example, the upper surfaces, of the plurality of upper surface connection pads **122**UP that are not covered by the upper surface solder resist layer **132**. The upper surface and the side surfaces of the plurality of upper surface connection pads **122**UP may be fully covered by the plurality of chip connection members **18** and the upper surface solder resist layer **132**. At least two element terminals **22** of the unit element chip **20** may be electrically connected to the at least two element connection pads **122**SP. In some embodiments, the element connection pad **122**SP and the element terminal **22** may be electrically connected by an electrically conductive solder **24**. The electrically conductive solder **24** may completely cover the surfaces, for example, the upper surface, of the plurality of element connection pads **122**SP not covered by the upper surface solder resist layer **132**. Upper surfaces and side surfaces of the at least two alignment patterns **122**AK may be externally exposed without being covered by the upper surface solder resist layer **132**.

An underfill layer **60** may be arranged between the semiconductor chip **10** and the package substrate **100** and may surround the plurality of chip connection members **18** and fill the space between the semiconductor chip **10** and the package substrate **100**. The underfill layer **60** may include a resin. For example, the underfill layer **60** may be formed of an epoxy resin by a capillary under-fill method. A filler may

be mixed in the underfill layer **60**, and the filler may be formed of, for example, silica.

The upper surface solder resist layer **132** might not cover a portion of the upper surface of the at least one substrate base **110**. For example, the upper surface solder resist layer **132** might not cover a portion of the upper surface of the at least one substrate base **110** positioned around the at least two alignment patterns **122**AK. The upper surface solder resist layer **132** may be spaced apart from at least two alignment patterns **122**AK, and a portion of the upper surface of the at least one substrate base **110** may be externally exposed without being covered by the upper surface solder resist layer **132** and the at least two alignment patterns **122**AK between the upper surface solder resist layer **132** and at least two alignment patterns **122**AK that are spaced apart from each other.

The upper surface solder resist layer **132** may have a plurality of first upper surface openings **132**OP**1**, at least two second upper surface openings **132**OP**2**, and at least two third upper surface openings **132**OP**3**, which extend from the upper surface to the lower surface of the upper surface solder resist layer **132**. A plurality of upper surface connection pads **122**UP may be disposed in the plurality of first upper surface openings **132**OP**1**. At least two alignment patterns **122**AK may be disposed in the at least two second upper surface openings **132**OP**2**. At least two element connection pads **122**SP may be disposed in the at least two third upper surface openings **132**OP**3**. A plurality of first upper surface openings **132**OP**1** may be disposed in the chip attachment region, and at least two second upper surface openings **132**OP**2** may be disposed in the peripheral region.

A portion of the upper surface of at least one substrate base **110** in the plurality of first upper surface openings **132**OP**1** may be fully covered by the plurality of upper surface connection pads **122**UP. A portion of the upper surface of the at least one substrate base **110** in the at least two second upper surface openings **132**OP**2** may be covered by the at least two alignment patterns **122**AK, and the remaining portion may be uncovered and exposed. A portion of the upper surface of at least one substrate base **110** in the at least two third upper surface openings **132**OP**3** may be fully covered by at least two element connection pads **122**SP.

A plurality of upper surface connection pads **122**UP, at least two element connection pads **122**SP, and at least two alignment patterns **122**AK are parts of the wiring patterns **122** and may be made of the same material.

Some of the wiring patterns **122** disposed on the lower surface of the at least one substrate base **110** might not be covered by the lower surface solder resist layer **134**. For example, the plurality of lower surface connection pads **122**LP that are parts of the wiring patterns **122** disposed on the lower surface of at least one substrate base **110** might not be covered by the lower surface solder resist layer **134**. In some embodiments, the lower surface solder resist layer **134** might not cover the lower surfaces of the plurality of lower surface connection pads **122**LP. A plurality of external connection terminals **150** may be attached to the plurality of lower surface connection pads **122**LP. The plurality of external connection terminals **150** may completely cover the surface, for example, the lower surface, of the plurality of lower surface connection pads **122**LP not covered by the lower surface solder resist layer **134**. In some embodiments, the external connection terminal **150** may be a solder ball.

The lower surface solder resist layer **134** may have a plurality of lower surface openings **134**OP extending from the upper surface to the lower surface. The plurality of lower surface openings **134**OP may be disposed in the chip attachment region and the peripheral region. A plurality of lower surface connection pads **122**LP may be disposed in the plurality of lower surface openings **134**OP. A portion of the lower surface of the at least one substrate base **110** in the plurality of lower surface openings **134**OP may be fully covered by the plurality of lower surface connection pads **122**LP.

The plurality of upper surface connection pads **122**UP may be electrically connected to the plurality of lower surface upper surface connection pads **122**LP through some of the plurality of wiring vias **124**. In some embodiments, the plurality of upper surface connection pads **122**UP may be electrically connected to the plurality of lower surface upper surface connection pads **122**LP through some of the plurality of wiring vias **124** and other portions of the plurality of wiring patterns **122**. For example, in each of the plurality of upper surface connection pads **122**UP, at least one wiring via **124** may be connected to the lower surface or at least one wiring pattern **122** may be connected to a side surface.

At least two alignment patterns **122**AK each might not be electrically connected to the remainder of the substrate wiring structure **120**, which may include, the remaining wiring patterns **122** except for one alignment pattern **122**AK among the plurality of wiring patterns **122**, and the plurality of wiring vias **124**. For example, each of the at least two alignment patterns **122**AK may be electrically floated. The entire lower surface of each of the at least two alignment patterns **122**AK may be in contact with the upper surface of the at least one substrate base **110**.

The substrate base **110** may be made of phenol resin, epoxy resin, and/or polyimide. The substrate base **110** may include, for example, Frame Retardant 4 (FR4), Tetrafunctional epoxy, Polyphenylene ether, Epoxy/polyphenylene oxide, Bismaleimide triazine (BT), Thermount, Cyanate ester, Polyimide, and/or Liquid crystal polymer.

The substrate wiring structure **120** may include copper. For example, each of the plurality of wiring patterns **122** and the plurality of wiring vias **124** may consist of electrolytically deposited (ED) copper foil, rolled-annealed (RA) copper foil, ultra-thin copper foil, sputtered copper, copper alloys, and the like.

The solder resist layer **130**, including the upper surface solder resist layer **132** and the lower surface solder resist layer **134**, may be formed of a polyimide film, a polyester film, a flexible solder mask, a photoimageable coverlay (PIC), a photo-imagable solder resist, or the like. For example, after applying the thermosetting ink directly to the upper surface and the lower surface of at least one substrate base **110** by silk screen printing method or ink jet method, the solder resist layer **130** may be formed by heat, UV, or IR curing. For example, after applying the photosensitive solder resist to the upper surface and the lower surface of at least one substrate base **110** by a screen method or a spray coating method, the solder resist layer **130** may be formed by removing unnecessary portions through exposure and development and curing with UV or IR. The solder resist layer **130** may be formed by, for example, a laminating method of adhering a polyimide film or a polyester film to the upper and lower surfaces of the at least one substrate base **110**.

The semiconductor chip **10** may include a semiconductor substrate **12** having an active surface and an inactive surface opposite to each other; a semiconductor element **14** formed on the active surface of the semiconductor substrate **12**; and a plurality of chip pads **16** disposed on a first side surface of the semiconductor chip **10**. In this specification, the first

surface of the semiconductor chip **10** and the second surface of the semiconductor chip **10** are opposite to each other, and the second surface of the semiconductor chip **10** refers to the inactive surface of the semiconductor substrate **12**. Since the active surface of the semiconductor substrate **12** is adjacent to the first surface of the semiconductor chip **10**, a single illustration is used to show the active surface of the semiconductor substrate **12** and the first surface of the semiconductor chip **10**.

In some embodiments, the semiconductor chip **10** has a face down arrangement in which the first surface faces the package substrate **100**, and may be attached to the upper surface of the package substrate **100**. In this case, the first surface of the semiconductor chip **10** may be referred to as a lower surface of the semiconductor chip **10**, and the second surface of the semiconductor chip **10** may be referred to as an upper surface of the semiconductor chip **10**.

A plurality of chip connection members **18** may be arranged between the plurality of chip pads **16** of the semiconductor chip **10** and the plurality of upper surface connection pads **122**UP of the package substrate **100**. For example, the chip connection member **18** may be a solder ball or a micro bump. The semiconductor chip **10** and the package substrate **100** may be electrically connected through a plurality of chip connection members **18**.

The plurality of chip connection members **18** may be attached to the plurality of connection pads **122**UP. Each of the chip connection members **18** may completely fill a portion of the first upper surface opening **132** OP**1** that is not filled by the connection pad **122**UP. For example, the first upper surface opening **132**OP**1** may be completely filled by the connection pad **122**UP and the chip connection member **18**.

A portion of the package substrate **100** overlapping the semiconductor chip **10** in the vertical direction may be referred to as a chip attachment region, and the remaining portion of the package substrate **100**, for example, a portion of the package substrate **100** that does not overlap the semiconductor chip **10** in a vertical direction, may be referred to as a peripheral region. A plurality of upper surface connection pads **122**UP may be disposed in the chip attachment region of the package substrate **100**, and at least two alignment patterns **122**AK may be disposed in the peripheral region. At least two element connection pads **122**SP may be disposed in the peripheral region, but the inventive concept is not necessarily limited thereto. For example, a portion of the at least two element connection pads **122**SP may be disposed in a portion where the plurality of upper surface connection pads **122**UP are not disposed in the chip attachment region. A plurality of lower surface connection pads **122**LP may be disposed in the chip attachment region and the peripheral region.

Unless otherwise specified in the specification, the upper surface refers to a surface facing upward in the drawing, and the lower surface refers to a surface facing downward in the drawing.

The semiconductor substrate **12** may include, for example, a semiconductor material such as silicon (Si) or germanium (Ge). Alternatively, the semiconductor substrate **12** may include a compound semiconductor material such as silicon carbide (SiC), gallium arsenide (GaAs), indium arsenide (InAs), and indium phosphide (InP). The semiconductor substrate **12** may include an electrically conductive area, for example, a well doped with impurities. The semiconductor substrate **12** may have various element isolation structures such as a shallow trench isolation (STI) structure.

A semiconductor element **14** including a plurality of individual devices of various types may be formed on the active surface of the semiconductor substrate **12**. The plurality of individual devices may include various microelectronic devices, for example, a metal-oxide-semiconductor field effect transistor (MOSFET) such as a complementary metal-insulator-semiconductor (CMOS) transistor, a system large scale integration (LSI), an active element, a passive element, and the like. The plurality of individual devices may be electrically connected to the electrically conductive area of the semiconductor substrate **12**. The semiconductor element **14** may further include at least two of the plurality of individual devices, or an electrically conductive wire or an electrically conductive plug electrically connecting the plurality of individual devices to the electrically conductive area of the semiconductor substrate **12**. In addition, each of the plurality of individual devices may be electrically isolated from neighboring individual devices by an insulating film.

In some embodiments, the semiconductor chip **10** may be a System on Chip (SoC), a central processing unit (CPU) chip, a graphics processing unit (GPU) chip, or an application processor (AP) chip. In some other embodiments, the semiconductor chip **10** may be, for example, a memory semiconductor chip. The memory semiconductor chip may be, for example, a non-volatile memory semiconductor chip such as a flash memory, a phase-change random access memory (PRAM), a magnetoresistive random access memory (MRAM), a ferroelectric random access memory (FeRAM), or a resistive random access memory (RRAM). The flash memory may be, for example, a NAND flash memory or a V-NAND flash memory. In some embodiments, the semiconductor chip **10** may be a volatile memory semiconductor chip such as a dynamic random access memory (DRAM) or a static random access memory (SRAM).

In some embodiments, the semiconductor package **1** may further include at least one unit element chip **20** attached to the package substrate **100**. The unit element chip **20** may be attached to the upper surface of the package substrate **100** and may be horizontally spaced apart from the semiconductor chip **10**. The unit element chip **20** may be a passive element or an active element. For example, the passive element may be a resistor, an inductor, or a capacitor, and the active element may be a transistor, a diode, or an operational amplifier. In some embodiments, the unit element chip **20** may be an intermediate storage capacitor (ISC). For example, the unit element chip **20** may be a ceramic capacitor or a ceramic resistor. The unit element chip **20** may have two element terminals **22**. At least two element terminals **22** of at least one unit element chip **20** may be electrically connected to at least two element connection pads **122**SP. An electrically conductive solder **24** may be arranged between the element terminal **22** and the element connection pad **122**SP. The chip connection member **24** may completely fill a portion of the first upper surface opening **132** OP**1** that is not filled by the connection pad **122**UP. For example, all of the third upper surface opening **132**OP**3** may be filled by the element connection pad **122**SP and the electrically conductive solder **24**. In some other embodiments, the semiconductor package **1** includes a plurality of unit element chips **20**, and at least some of the plurality of unit element chips **20** may be attached to the lower surface of the package substrate **100** so as to be horizontally spaced apart from the plurality of external connection terminals **150**.

The package substrate **100**, according to the inventive concept, includes at least two alignment patterns **122**AK

disposed in at least two second upper surface openings **132**OP**2** of the upper surface solder resist layer **132**. Accordingly, the semiconductor chip **10** may be attached to the package substrate **100** using at least two second upper surface openings **132**OP**2** and at least two alignment patterns **122**AK of the upper surface solder resist layer **132** as alignment keys.

Since the upper surface connection pad **122**UP disposed in the first upper surface opening **132**OP**1** and the first upper surface opening **132**OP**1** and the alignment pattern **122**AK disposed in the second upper surface opening **132**OP**2** and the second upper surface opening **132**OP**2** are formed together, when using at least two second upper surface openings **132**OP**2** and at least two alignment patterns **122**AK as alignment keys, alignment may also be made with respect to the first upper surface opening **132**OP**1** and the upper surface connection pad **122**UP. Therefore, in the process of attaching the semiconductor chip **10** to the package substrate **100**, by using the at least two second upper surface openings **132**OP**2** and the at least two alignment patterns **122**AK as alignment keys, it is possible to align the plurality of chip pads **16** and the plurality of upper surface connection pads **122**UP, and reliability of electrical connection between the plurality of chip pads **16** and the plurality of upper surface connection pads **122**UP through the plurality of chip connection members **18** may be secured.

FIG. **2** is a plan view taken from above the package substrate according to the inventive concept.

Referring to FIG. **2**, the package substrate **100** may include a chip attachment region CR, on which the semiconductor chip **10** is disposed, and a peripheral region PR, on which the semiconductor chip **10** is not attached. In the plan view, the peripheral region PR may enclose the perimeter of the chip attachment region CR. In the vertical direction, the chip attachment region CR may overlap the semiconductor chip **10**, and the peripheral region PR might not overlap the semiconductor chip **10**. At least two alignment patterns **122**AK may be disposed in the peripheral region PR. Each of the at least two alignment patterns **122**AK may be disposed adjacent to the edge of the package substrate **100**, in a plan view, for example, the edge of the upper surface of the at least one substrate base **110**. For example, the two alignment patterns **122**AK may be disposed adjacent to two edges of the package substrate **100** corresponding to each other in a diagonal direction, in a plan view. At least two element connection pads **122**SP may be disposed in the peripheral region PR, but this arrangement is not necessarily limited thereto. In some embodiments, the at least two element connection pads **122**SP may be disposed adjacent to the chip attachment region CR, in the plan view, rather than the at least two alignment patterns **122**AK. For example, at least two element connection pads **122**SP may be disposed farther from the edge of the package substrate **100** than the at least two alignment patterns **122**AK.

The plurality of upper surface connection pads **122**UP may be disposed in the chip attachment region CR. For example, each of the plurality of upper surface connection pads **122**UP may overlap the semiconductor chip **10** in the vertical direction.

The upper surface solder resist layer **132** may have a plurality of first upper surface openings **132**OP**1**, at least two second upper surface openings **132**OP**2**, and at least two third upper surface openings **132**OP**3**, which extend from the upper surface to the lower surface of the upper surface solder resist layer **132**. A plurality of upper surface connection pads **122**UP may be disposed in the plurality of first upper surface openings **132**OP**1**. At least two alignment patterns **122**AK may be disposed in the at least two second upper surface openings **132**OP**2**. At least two element connection pads **122**SP may be disposed in the at least two third upper surface openings **132**OP**3**. A portion of the upper surface of at least one substrate base **110** in the plurality of first upper surface openings **132**OP**1** may be fully covered by the plurality of upper surface connection pads **122**UP. A portion of the upper surface of the at least one substrate base **110** in the at least two second upper surface openings **132**OP**2** may be covered by the at least two alignment patterns **122**AK, and the remaining portion may be uncovered and exposed. The upper surface solder resist layer **132** may be spaced apart from at least two alignment patterns **122**AK. A portion of the upper surface of the at least one substrate base **110** may be exposed between the upper surface solder resist layer **132** and the at least two alignment patterns **122**AK spaced apart from each other. A portion of the upper surface of at least one substrate base **110** in the at least two third upper surface openings **132**OP**3** may be fully covered by at least two element connection pads **122**SP.

In some embodiments, each of the first upper surface opening **132**OP**1** and the upper surface connection pad **122**UP may have a shape, in a plan view, that does not have a vertex, and each of the second upper surface opening **132**OP**2** and the alignment pattern **122**AK may have a shape, in a plan view, having angled vertices. For example, each of the first upper surface opening **132**OP**1** and the upper surface connection pad **122**UP may have a circular or elliptical shape, in a plan view. For example, each of the second upper surface opening **132**OP**2** and the alignment pattern **122**AK may have a shape, in a plan view, such as polygons such as triangles and squares, an L-shape with thickness or width in the horizontal direction, a + (cross) shape with thickness or width in the horizontal direction, a ring shape with vertices with refracted angles, and the like. In FIG. **2**, each of the third upper surface opening **132**OP**3** and the element connection pad **122**SP is illustrated as having a rectangular shape, in a plan view, but this is not necessarily limited thereto. For example, each of the third upper surface opening **132**OP**3** and the element connection pad **122**SP may have a circular or elliptical shape, in a plan view.

A horizontal width of the first upper surface opening **132**OP**1** may be less than a horizontal width of the second upper surface opening **132**OP**2**. A horizontal width of the third upper surface opening **132**OP**3** may be less than a horizontal width of the second upper surface opening **132**OP**2**. A horizontal width of the third upper surface opening **132**OP**3** may be substantially equal to a horizontal width of the first upper surface opening **132**OP**1** or may greater than a horizontal width of the first upper surface opening **132**OP**1**. In some embodiments, the horizontal width of the second upper surface opening **132**OP**2** may have a relatively wide portion and a relatively narrow portion, and each of a relatively wide portion and a relatively narrow portion of the horizontal width of the second upper surface opening **132**OP**2** may be greater than a horizontal width of the first upper surface opening **132**OP**1**.

The horizontal width of the upper surface connection pad **122**UP may less than the horizontal width of the alignment pattern **122**AK. The horizontal width of the element connection pad **122**SP may be less than the horizontal width of the alignment pattern **122**AK. The horizontal width of the element connection pad **122**SP may be substantially equal to the horizontal width of the upper surface connection pad **122**UP or may be greater than the horizontal width of the upper surface connection pad **122**UP. In some embodiments,

the horizontal width of the alignment pattern **122**AK may have a relatively wide portion and a relatively narrow portion, and each of a relatively wide portion and a relatively narrow portion of the horizontal width of the alignment pattern **122**AK may be greater than the horizontal width of the upper surface connection pad **122**UP.

FIG. **3** is a plan view taken from above the package substrate according to the inventive concept.

Referring to FIG. **3**, the package substrate **100** may include a chip attachment region CR on which the semiconductor chip **10** is disposed and a peripheral region PR on which the semiconductor chip **10** is not attached. In the vertical direction, the chip attachment region CR may overlap the semiconductor chip **10**, and the peripheral region PR might not overlap the semiconductor chip **10**. The plurality of upper surface connection pads **122**UP may be disposed in the chip attachment region CR.

At least four alignment patterns **122**AK may be disposed in the peripheral region PR. Each of the at least four alignment patterns **122**AK may be disposed adjacent to the edge of the package substrate **100** in a plan view. For example, the four alignment patterns **122**AK may be disposed adjacent to the four edges of the package substrate **100** in the plan view. At least two element connection pads **122**SP may be disposed in the peripheral region PR, but the current arrangement is not necessarily limited thereto. In some embodiments, the at least two element connection pads **122**SP may be adjacent to the chip attachment region CR, in the plan view, rather than the at least four alignment patterns **122**AK. For example, at least two element connection pads **122**SP may be disposed farther from the edge of the package substrate **100** than the at least four alignment patterns **122**AK, in the plan view.

The upper surface solder resist layer **132** may have a plurality of first upper surface openings **132**OP**1**, at least four second upper surface openings **132**OP**2**, and at least two third upper surface openings **132**OP**3**, which extend from the upper surface to the lower surface of the upper surface solder resist layer **132**. A plurality of upper surface connection pads **122**UP may be disposed in the plurality of first upper surface openings **132**OP**1**. At least four alignment patterns **122**AK may be disposed in the at least four third upper surface openings **132**OP**2**. At least two element connection pads **122**SP may be disposed in the at least two third upper surface openings **132**OP**3**. A portion of the upper surface of at least one substrate base **110** in the plurality of first upper surface openings **132**OP**1** may be fully covered by the plurality of upper surface connection pads **122**UP. A portion of the upper surface of the at least one substrate base **110** in the at least four second upper surface openings **132**OP**2** may be covered by the at least two alignment patterns **122**AK, and the remaining portion may be uncovered and exposed. The upper surface solder resist layer **132** may be spaced apart from at least four alignment patterns **122**AK. A portion of the upper surface of the at least one substrate base **110** may be exposed between the upper surface solder resist layer **132** and the at least four alignment patterns **122**AK spaced apart from each other. A portion of the upper surface of at least one substrate base **110** in the at least two third upper surface openings **132**OP**3** may be fully covered by at least two element connection pads **122**SP.

In some embodiments, each of the first upper surface opening **132**OP**1** and the upper surface connection pad **122**UP may have a shape, in a plan view, that does not have a vertex, and each of the second upper surface opening **132**OP**2** and the alignment pattern **122**AK may have a shape, in the plan view, having angled vertices. For example, each of the first upper surface opening **132**OP**1** and the upper surface connection pad **122**UP may have a circular or elliptical shape, in a plan view. For example, each of the second upper surface opening **132**OP**2** and the alignment pattern **122**AK may have a shape, in the plan view, such as polygons including rectangles, an L-shape with thickness or width in the horizontal direction, a + shape with thickness or width in the horizontal direction, a ring shape with vertices with refracted angles, and the like.

A horizontal width of the first upper surface opening **132**OP**1** may be less than a horizontal width of the second upper surface opening **132**OP**2**. A horizontal width of the third upper surface opening **132**OP**3** may be less than a horizontal width of the second upper surface opening **132**OP**2**. The horizontal width of the upper surface connection pad **122**UP may less than the horizontal width of the alignment pattern **122**AK. The horizontal width of the element connection pad **122**SP may be less than the horizontal width of the alignment pattern **122**AK.

FIG. **4**A is an enlarged plan view of a part of the package substrate according to the inventive concept, and FIG. **4**B is a cross-sectional view showing a part of the package substrate according to the inventive concept.

Referring to FIGS. **4**A and **4**B together, the upper surface solder resist layer **132** of the package substrate **100** may have a first upper surface opening **132**OP**1**, a second upper surface opening **132**OP**2**, and a third upper surface opening **132**OP**3**, which extend from the upper surface to the lower surface of the upper surface solder resist layer **132**. An upper surface connection pad **122**UP may be disposed in the first upper surface opening **132**OP**1**. An alignment pattern **122**AK may be disposed in the second upper surface opening **132**OP**2**. An element connection pad **122**SP may be disposed in the third upper surface opening **132**OP**3**. A portion of the upper surface of at least one substrate base **110** in the first upper surface opening **132**OP**1** may be fully covered by the upper surface connection pad **122**UP. A portion of the upper surface of at least one substrate base **110** in the third upper surface opening **132**OP**3** may be fully covered by the element connection pad **122**SP.

A portion of the upper surface of the at least one substrate base **110** in the second upper surface opening **132**OP**2** may be covered by the alignment pattern **122**AK, and the remaining portion may be uncovered and exposed. The upper surface solder resist layer **132** may be spaced apart from the alignment pattern **122**AK. For example, the side surface of the upper surface solder resist layer **132** and the side surface of the alignment pattern **122**AK defining the second upper surface opening **132**OP**2** may be spaced apart from each other by the first interval G**1** in the horizontal direction. The first interval G**1** may be, for example, about 25 μm to about 75 μm. A portion of the upper surface of the at least one substrate base **110** may be exposed between the upper surface solder resist layer **132** and the alignment pattern **122**AK spaced apart from each other.

In some embodiments, the upper surface solder resist layer **132** may cover an edge portion of the upper surface of the upper surface connection pad **122**UP, and the upper surface solder resist layer **132** might not cover the remaining middle portion. In some embodiments, the upper surface solder resist layer **132** may cover an edge portion of the upper surface of the device pad **122**SP, and the upper surface solder resist layer **132** might not cover the remaining middle portion.

In some embodiments, each of the first upper surface opening **132**OP**1** and the upper surface connection pad **122**UP may have a shape, in a plan view, that does not have

a vertex, and each of the second upper surface opening **132**OP**2** and the alignment pattern **122**AK may have a shape, in a plan view, having vertices. For example, each of the first upper surface opening **132**OP**1** and the upper surface connection pad **122**UP may have a circular or elliptical shape, in a plan view. For example, each of the second upper surface opening **132**OP**2** and the alignment pattern **122**AK may have a +-shape, in a plan view, having a particular thickness, for example, a width in a horizontal direction. In FIG. **4**A, each of the third upper surface opening **132**OP**3** and the element connection pad **122**SP is illustrated as having a rectangular shape, in a plan view, but the disclosure is not necessarily limited thereto. For example, each of the third upper surface opening **132**OP**3** and the element connection pad **122**SP may have a circular or elliptical shape, in a plan view.

For example, the alignment pattern **122**AK may have at least three vertices. In some embodiments, the alignment pattern **122**AK may have a convex vertex PT**1** or may have a convex vertex PT**1** and a concave vertex PT**2** together. For example, the alignment pattern **122**AK may have eight convex vertices PT**1** and four concave vertices PT**2**.

The first opening width S**1**, which is the horizontal width of the first upper surface opening **132**OP**1**, may be less than the second opening width S**2**, which is the horizontal width of the second upper surface opening **132**OP**2**. In some embodiments, the second opening width S**2** may be 5 times or more greater than the first opening width S**1**. The third opening width S**3**, which is the horizontal width of the third upper surface opening **132**OP**3**, may be less than the second opening width S**2**. The third opening width S**3** may be substantially equal to the width of the first opening S**1** or may be greater than the first opening width S**1**. For example, the first opening width S**1** may be about 50 μm to about 150 μm. For example, the second opening width S**2** may be about 250 μm to about 1000 μm.

In some embodiments, the second upper surface opening **132**OP**2** may have a relatively wide portion and a relatively narrow portion of the horizontal width, and each of the relatively wide portion and the relatively narrow portion of the second upper surface opening **132**OP**2** may be greater than the first opening width S**1**. For example, in the second upper surface openings **132**OP**2**, a portion having a relatively wide horizontal width may have a second opening width S**2** of about 500 μm to about 1000 μm and a portion having a relatively narrow horizontal width may have a second opening width S**2** of about 250 μm to about 500 μm.

The first horizontal width W**1** that is the horizontal width of the upper surface connection pad **122**UP may be less than the second horizontal width W**2** that is the maximum horizontal width of the alignment pattern **122**AK. The third horizontal width W**3**, which is the horizontal width of the element connection pad **122**SP, may be less than the second horizontal width W**2**. The third horizontal width W**3** may be substantially equal to the first horizontal width W**1** or may be greater than the first horizontal width W**1**. In some embodiments, the horizontal width of the alignment pattern **122**AK may have a relatively wide portion and a relatively narrow portion, and a portion of the alignment pattern **122**AK having a relatively wide horizontal width may have a second horizontal width W**2**, and a relatively narrow portion may have a fourth horizontal width W**4**. The second horizontal width W**2** may be a width in the longitudinal direction of two +-shaped extension lines, and the fourth horizontal width W**4** may be a width in a direction orthogonal to the two +-shaped extension lines. The fourth horizontal width W**4** may be greater than the first opening width S**1**. The first horizontal width W**1** may be equal to or greater than the first opening width S**1**. For example, the first horizontal width W**1** may be about 50 μm to about 160 μm. For example, each of the first horizontal width W**1** and the first opening width S**1** may be greater than the first interval G**1**. The third horizontal width W**3** may be greater than the third opening width S**3**. The second horizontal width W**2** may be about 300 μm to about 900 μm, and the fourth horizontal width W**4** may be about 60 μm to about 400 μm.

The upper surface of the upper surface solder resist layer **132** may be positioned at a vertical level that is higher than the upper surface of each of the upper surface connection pad **122**UP, the alignment pattern **122**AK, and the element connection pad **122**SP. In some embodiments, each of the upper surface connection pad **122**UP, the alignment pattern **122**AK, and the element connection pad **122**SP may have a first thickness H**1**, and the upper surface solder resist layer **132** has a second thickness H**2** that is greater than the first thickness H**1** and may cover the upper surface of at least one substrate base **110**. For example, the first thickness H**1** may be about 10 μm to about 20 μm, and the second thickness H**2** may be about 11 μm to about 30 μm.

Although FIG. **4**B illustrates that the upper surface solder resist layer **132** has an upper surface positioned at the same vertical level, the inventive concept is not necessarily limited thereto. For example, the upper surface of the portion covering the upper surface of each of the upper surface connection pad **122**UP and the element connection pad **122**SP of the upper surface solder resist layer **132** and the portion adjacent to the side surface may be positioned at a higher vertical level than the upper surface of the portion covering the upper surface of the at least one substrate base **110**.

FIGS. **5**A to **5**E are enlarged plan views taken from above a portion of the package substrate, according to the inventive concept.

Referring to FIG. **5**A, the upper surface solder resist layer **132** of the package substrate **100***a* may have a second upper surface opening **132**OP**2***a* extending from the upper surface to the lower surface of the upper surface solder resist layer **132**. An alignment pattern **122**AKa may be disposed in the second upper surface opening **132**OP**2***a*. A portion of the upper surface of the at least one substrate base **110** in the second upper surface opening **132**OP**2***a* may be covered by the alignment pattern **122**AKa, and the remaining portion may be uncovered and exposed. A portion of the side surface of the upper surface solder resist layer **132** defining the second upper surface opening **132**OP**2***a* may be spaced apart from the side surface of the alignment pattern **122**AKa, and the remaining portion may be in contact with the side surface of the alignment pattern **122**AKa. A portion of the upper surface of the at least one substrate base **110** may be externally exposed between a portion of the side surface of the upper surface solder resist layer **132** and the alignment pattern **122**AKa spaced apart from each other.

Each of the second upper surface opening **132**OP**2***a* and the alignment pattern **122**AKa may have a shape with vertices, in a plan view. For example, the alignment pattern **122**AKa may have a rectangular shape, in a plan view. The side surface of the upper surface solder resist layer **132** defining the second upper surface opening **132**OP**2***a* may be spaced apart from a portion adjacent to the edge of the alignment pattern **122**AKa, and may be in contact with a portion of a side surface of the alignment pattern **122**AKa that is spaced apart from the edge of the alignment pattern **122**AKa. A portion of the upper surface of the at least one substrate base **110** exposed between a side surface of the

upper surface solder resist layer **132** defining the second upper surface opening **132**OP**2***a* and a portion adjacent to the edge of the alignment pattern **122**AKa may have an L-shape, in a plan view, having a particular width.

For example, the alignment pattern **122**AKa may have four vertices. In some embodiments, the alignment pattern **122**AKa may have four convex vertices PT**1**.

Referring to FIG. **5**B, the upper surface solder resist layer **132** of the package substrate **100***b* may have a second upper surface opening **132**OP**2***b* extending from the upper surface to the lower surface of the upper surface solder resist layer **132**. An alignment pattern **122**AKb may be disposed in the second upper surface opening **132**OP**2***b*. A portion of the upper surface of the at least one substrate base **110** in the second upper surface opening **132**OP**2***b* may be covered by the alignment pattern **122**AKb, and the remaining portion may be uncovered and exposed. A side surface of the upper surface solder resist layer **132** defining the second upper surface opening **132**OP**2***b* may be spaced apart from a side surface of the alignment pattern **122**AKb. A portion of the upper surface of the at least one substrate base **110** may be externally exposed between the side surface of the upper surface solder resist layer **132** and the alignment pattern **122**AKb spaced apart from each other.

Each of the second upper surface opening **132**OP**2***b* and the alignment pattern **122**AKb may have a shape, in a plan view, with vertices. For example, each of the second upper surface opening **132**OP**2***b* and the alignment pattern **122**AKb may have a rectangular shape, in a plan view. A portion of the upper surface of the at least one substrate base **110** exposed between a side surface of the upper surface solder resist layer **132** defining the second upper surface opening **132**OP**2***b* and a portion adjacent to the edge of the alignment pattern **122**AKb may be refracted to have a ring-shape, in a plan view, with vertices.

For example, the alignment pattern **122**AKb may have four vertices. In some embodiments, the alignment pattern **122**AKb may have four convex vertices PT**1**.

Referring to FIG. **5**C, the upper surface solder resist layer **132** of the package substrate **100***c* may have a second upper surface opening **132**OP**2***c* extending from the upper surface to the lower surface of the upper surface solder resist layer **132**. An alignment pattern **122**AKc may be disposed in the second upper surface opening **132**OP**2***c*. A portion of the upper surface of the at least one substrate base **110** in the second upper surface opening **132**OP**2***c* may be covered by the alignment pattern **122**AKc, and the remaining portion may be uncovered and exposed. A portion of the side surface of the upper surface solder resist layer **132** defining the second upper surface opening **132**OP**2***c* may be spaced apart from the side surface of the alignment pattern **122**AKc, and the remaining portion may be in contact with the side surface of the alignment pattern **122**AKc. A portion of the upper surface of the at least one substrate base **110** may be externally exposed between a portion of the side surface of the upper surface solder resist layer **132** and the alignment pattern **122**AKc spaced apart from each other.

Each of the second upper surface opening **132**OP**2***c* and the alignment pattern **122**AKc may have a shape, in a plan view, with vertices. For example, the second upper surface opening **132**OP**2***c* may have a rectangular shape, in a plan view. For example, the alignment pattern **122**AKa may have a +-shape, in a plan view, having a particular width. The side surface of the upper surface solder resist layer **132** defining the second upper surface opening **132**OP**2***c* may be in contact with both ends of each of two +-shaped extension lines of the alignment pattern **122**AKb, and may be spaced apart from the side surface of each of the two extension lines of the + shape. A portion of the upper surface of the at least one substrate base **110** exposed between a side surface of the upper surface solder resist layer **132** defining the second upper surface opening **132**OP**2***c* and a side surface of the alignment pattern **122**AKc may have a rectangular shape, in a plan view. For example, the alignment pattern **122**AK may have eight convex vertices PT**1** and four concave vertices PT**2**.

Referring to FIG. **5**D, the upper surface solder resist layer **132** of the package substrate **100***d* may have a second upper surface opening **132**OP**2***d* extending from the upper surface to the lower surface of the upper surface solder resist layer **132**. An alignment pattern **122**AKd may be disposed in the second upper surface opening **132**OP**2***d*. A portion of the upper surface of the at least one substrate base **110** in the second upper surface opening **132**OP**2***d* may be covered by the alignment pattern **122**AKd, and the remaining portion may be uncovered and exposed.

The alignment pattern **122**AKd may include a first portion **122**AKd**1** and a second portion **122**AKd**2** that are spaced apart from each other. Each of the second upper surface opening **132**OP**2***d* and the first and second portions **122**AKd**1** and **122**AKd**2** of the alignment pattern **122**AKd may have a shape, in a plan view, with vertices. For example, the second upper surface opening **132**OP**2***d* and the first portion **122**AKd**1** of the alignment pattern **122**AKd may have a rectangular shape, in a plan view, and the second portion **122**AKd**2** of the alignment pattern **122**AKd may be refracted to have a ring-shape, in a plan view, with vertices. The second portion **122**AKd**2** of the alignment pattern **122**AKd may be spaced apart from the first portion **122**AKd**1** and surround the first portion **122**AKd**1**.

A side surface of the upper surface solder resist layer **132** defining the second upper surface opening **132**OP**2***d* and an outer surface of the second portion **122**AKd**2** of the alignment pattern **122**AKd may contact each other. A portion of the upper surface of the at least one substrate base **110** may be externally exposed between the inner surface of the second portion **122**AKd**2** of the alignment pattern **122**AKd and the side surface of the first portion **122**AKd**1**. A portion of the upper surface of the at least one substrate base **110** exposed between the inner surface of the second portion **122**AKd**2** of the alignment pattern **122**AKd and the side surface of the first portion **122**AKd**1** may be refracted to have a ring-shape, in a plan view, with vertices.

For example, the first portion **122**AKd**1** of the alignment pattern **122**AKd may have four convex vertices PT**1**, and the second portion **122**AKd**2** may have four convex vertices PT**1** and four concave vertices PT**2**.

Referring to FIG. **5**E, the upper surface solder resist layer **132** of the package substrate **100***e* may have a second upper surface opening **132**OP**2***e* extending from the upper surface to the lower surface of the upper surface solder resist layer **132**. An alignment pattern **122**AKe may be disposed in the second upper surface opening **132**OP**2***e*. A portion of the upper surface of the at least one substrate base **110** in the second upper surface opening **132**OP**2***e* may be covered by the alignment pattern **122**AKe, and the remaining portion may be uncovered and exposed. A side surface of the upper surface solder resist layer **132** defining the second upper surface opening **132**OP**2***e* may be spaced apart from a side surface of the alignment pattern **122**AKe. A portion of the upper surface of the at least one substrate base **110** may be externally exposed between the side surface of the upper surface solder resist layer **132** and the alignment pattern **122**AKe spaced apart from each other.

Each of the second upper surface opening **132**OP**2***e* and the alignment pattern **122**AKe may have a shape, in a plan view, with vertices. For example, each of the second upper surface opening **132**OP**2***e* and the alignment pattern **122**AKe may have an L-shape, in a plan view, having a particular width. A portion of the upper surface of the at least one substrate base **110** exposed between a side surface of the upper surface solder resist layer **132** defining the second upper surface opening **132**OP**2***e* and a portion adjacent to the edge of the alignment pattern **122**AKe may be refracted to have vertices and surround the alignment pattern **122**AKe.

For example, the alignment pattern **122**AKe may have five convex vertices PT**1** and one concave vertex PT**2**.

FIGS. **6**A to **6**E are cross-sectional views illustrating a package substrate and a method of manufacturing a semiconductor package including the package substrate according to the inventive concept.

Referring to FIG. **6**A, at least one substrate base **110** and a substrate wiring structure **120** including and a plurality of wiring patterns **122** disposed on the upper surface and lower surface of the substrate base **110** or disposed inside the substrate base **110** and extending in the horizontal direction, and a plurality of wiring vias **124** penetrating at least a portion of at least one substrate base **110** and extending in a vertical direction to electrically connect between two wiring patterns **122** positioned at different vertical levels among the plurality of wiring patterns **122** may be formed. In some embodiments, a plurality of stacked substrate bases **110**, and a substrate wiring structure **120** including a plurality of wiring patterns **122** and a plurality of wiring vias **124** may be formed.

Referring to FIG. **6**B, a solder resist layer **130** covering an upper surface and a lower surface of at least one substrate base **110** is formed. The upper surface solder resist layer **132** may cover the wiring patterns **122** disposed on the upper surface of at least one substrate base **110**. For example, the upper surface solder resist layer **132** may cover the plurality of upper surface connection pads **122**UP, at least two element connection pads **122**SP, and at least two alignment patterns **122**AK, which are portions of the wiring patterns **122** disposed on the upper surface of at least one substrate base **110**.

The lower surface solder resist layer **134** may cover the wiring patterns **122** disposed on the lower surface of the at least one substrate base **110**. For example, the lower surface solder resist layer **134** may cover the plurality of lower surface connection pads **122**LP, which are portions of the wiring patterns **122** disposed on the lower surface of the at least one substrate base **110**.

Referring to FIG. **6**C, by removing a portion of the upper surface solder resist layer **132**, a plurality of first upper surface openings **132**OP**1** extending from the upper surface to the lower surface of the upper surface solder resist layer **132**, at least two second upper surface openings **132**OP**2**, and at least two third upper surface openings **132**OP**3** are formed, and by removing a portion of the lower surface solder resist layer **132**, a plurality of lower surface openings **134**OP extending from the upper surface to the lower surface of the lower surface solder resist layer **134** is formed to form the package substrate **100**.

An upper surface solder resist layer **132**, having a plurality of first upper surface openings **132**OP**1**, at least two second upper surface openings **132**OP**2**, and at least two third upper surface openings **132**OP**3** may be formed not to cover portions of the wiring patterns **122** disposed on the upper surface of at least one substrate base **110**. For example, an upper surface solder resist layer **132** having a plurality of first upper surface openings **132**OP**1**, at least two second upper surface openings **132**OP**2**, and at least two third upper surface openings **132**OP**3** might not cover the plurality of upper surface connection pads **122**UP, at least two element connection pads **122**SP, and at least two alignment patterns **122**AK, which are portions of the wiring patterns **122** disposed on the upper surface of at least one substrate base **110**. In some embodiments, an upper surface solder resist layer **132** having a plurality of first upper surface openings **132**OP**1**, at least two second upper surface openings **132**OP**2**, and at least two third upper surface openings **132**OP**3** might not cover upper surfaces of the plurality of upper surface connection pads **122**UP and at least two element connection pads **122**SP, and might not cover upper surfaces and side surfaces of at least two alignment patterns **122**AK.

A plurality of upper surface connection pads **122**UP may be disposed in the plurality of first upper surface openings **132**OP**1**. At least two alignment patterns **122**AK may be disposed in the at least two second upper surface openings **132**OP**2**. At least two element connection pads **122**SP may be disposed in the at least two third upper surface openings **132**OP**3**.

A plurality of lower surface connection pads **122**LP may be disposed in the plurality of lower surface openings **134**OP. A portion of the lower surface of the at least one substrate base **110** in the plurality of lower surface openings **134**OP may be fully covered by the plurality of lower surface connection pads **122**LP.

Referring to FIGS. **6**D and **6**E together, after preparing the semiconductor chip **10** including a semiconductor substrate **12** having an active surface and an inactive surface opposite to each other, a semiconductor element **14** formed on the active surface of the semiconductor substrate **12**, and a plurality of chip pads **16** disposed on the first surface of the semiconductor chip **10** and including a plurality of chip connection members **18** attached, by using at least two second upper surface openings **132**OP**2** and at least two alignment patterns **122**AK of the upper surface solder resist layer **132** as alignment keys, the semiconductor chip **10** may be attached to the package substrate **100**. The semiconductor chip **10** has a face-down arrangement in which the first surface faces the package substrate **100**, and may be attached to the upper surface of the package substrate **100**.

The package substrate **100** may be manufactured as a unit package substrate corresponding to one semiconductor package, or may be provided separately as a unit package substrate before the semiconductor chip **10** is attached. For example, even when the package substrate **100** is manufactured as a strip array including a plurality of package substrates **100**, after being separated from the strip array into the package substrate **100** which is a unit package substrate, the semiconductor chip **10** may be attached to the package substrate **100**.

Since the upper surface connection pad **122**UP disposed in the first upper surface opening **132**OP**1** and the first upper surface opening **132**OP**1** and the alignment pattern **122**AK disposed in the second upper surface opening **132**OP**2** and the second upper surface opening **132**OP**2** are formed together, when using at least two second upper surface openings **132**OP**2** and at least two alignment patterns **122**AK as alignment keys, the first upper surface opening **132**OP**1** and the upper surface connection pad **122**UP that are covered by the semiconductor chip **10** and are not observed on the semiconductor chip **10** and the package substrate **100** may also be aligned.

Therefore, to align the plurality of chip pads **16** and the plurality of upper surface connection pads **122**UP and to ensure reliability of electrical connection between the plurality of chip pads **16** and the plurality of upper surface connection pads **122**UP through the plurality of chip connection members **18**, the semiconductor chip **10** may be attached to the package substrate **100**.

The unit element chip **20** may be attached to the upper surface of the package substrate **100** so that at least two element terminals **22** are electrically connected to at least two element connection pads **122**SP. The element connection pad **122**SP and the element terminal **22** may be electrically connected by an electrically conductive solder **24**. In FIGS. **6**D and **6**E, it is illustrated that the semiconductor chip **10** is first attached to the upper surface of the package substrate **100**, but the inventive concept is not necessarily limited thereto. For example, after attaching the unit element chip **20** to the upper surface of the package substrate **100** first, the semiconductor chip **10** may be attached later.

Thereafter, the semiconductor package **1** may be formed by forming an underfill layer **60** that surrounds the plurality of chip connection members **18** shown in FIG. **1** and fills the space between the semiconductor chip **10** and the package substrate **100**.

Referring to FIGS. **1** to **6**E, in relation to the manufacturing method of the semiconductor package **1** according to the inventive concept, the semiconductor chip **10** may be attached to the package substrate **100** using at least two second upper surface openings **132**OP**2** and at least two alignment patterns **122**AK of the upper surface solder resist layer **132** as alignment keys. Since the upper surface connection pad **122**UP disposed in the first upper surface opening **132**OP**1** and the first upper surface opening **132**OP**1** and the alignment pattern **122**AK disposed in the second upper surface opening **132**OP**2** and the second upper surface opening **132**OP**2** are formed together, when using at least two second upper surface openings **132**OP**2** and at least two alignment patterns **122**AK as alignment keys, the first upper surface opening **132**OP**1** and the upper surface connection pad **122**UP that are covered by the semiconductor chip **10** and are not observed on the semiconductor chip **10** and the package substrate **100** may also be aligned. For example, since the first interval G**1** between the second upper surface opening **132**OP**2** and the alignment pattern **122**AK is less than the first horizontal width W**1**, when using at least two second upper surface openings **132**OP**2** and at least two alignment patterns **122**AK as alignment keys, alignment accuracy between the plurality of chip pads **16** and the plurality of upper surface connection pads **122**UP may be increased.

Therefore, to align the plurality of chip pads **16** and the plurality of upper surface connection pads **122**UP and to ensure reliability of electrical connection between the plurality of chip pads **16** and the plurality of upper surface connection pads **122**UP through the plurality of chip connection members **18**, the semiconductor chip **10** may be attached to the package substrate **100**.

FIG. **7** is a cross-sectional view showing a semiconductor package including a package substrate according to the inventive concept. Among the contents of FIG. **7**, to the extent that an element has not been described in detail, it may be assumed that the element is at least similar to a corresponding element that has been described with reference to FIGS. **1** to **6**E.

Referring to FIG. **7**, the semiconductor package **2** includes a heat dissipation member **84** attached to the upper surface (e.g., the second surface) of the semiconductor chip **10** with a thermal interface material (TIM) layer **82** arranged therebetween.

The TIM layer **82** may be made of an insulating material or a material capable of maintaining electrical insulation and including an insulating material. The TIM layer **82** may include, for example, an epoxy resin. The TIM layer **82** may be, for example, mineral oil, grease, gap filler putty, phase change gel, phase change material pads. or a particle filled epoxy.

The heat dissipation member **84** may be, for example, a heat sink, a heat spreader, a heat pipe, or a liquid cooled cold plate.

FIG. **8** is a cross-sectional view showing a semiconductor package including a package substrate according to the inventive concept. Among the contents of FIG. **8**, to the extent that an element has not been described in detail, it may be assumed that the element is at least similar to a corresponding element that has been described with reference to FIGS. **1** to **7**.

Referring to FIG. **8**, the semiconductor package **3** includes a heat dissipation member **84***a* attached to the upper surface (e.g., the second surface) of the semiconductor chip **10** with a TIM layer **82** arranged therebetween.

The heat dissipation member **84***a* may extend from the semiconductor chip **10** onto a portion adjacent to the edge of the package substrate **100**. An adhesive member **86** may be arranged between the portion adjacent to the edge of the package substrate **100** and the heat dissipation member **84***a*. The semiconductor chip **10** may be disposed in a space defined between the package substrate **100** and the heat dissipation member **84***a*.

FIG. **9** is a plan view taken from above the package substrate according to the inventive concept. Among the contents of FIG. **9**, to the extent that an element has not been described in detail, it may be assumed that the element is at least similar to a corresponding element that has been described with reference to FIGS. **1** to **8**.

Referring to FIG. **9**, the package substrate **100** may include a chip attachment region CR on which the semiconductor chip **10** is disposed and a peripheral region PR on which the semiconductor chip **10** is not attached. In the vertical direction, the chip attachment region CR may overlap the semiconductor chip **10**, and the peripheral region PR might not overlap the semiconductor chip **10**. At least two alignment patterns **122**AK and **122**AKe may be disposed in the peripheral region PR. At least two alignment patterns **122**AK and **122**AKe each may be disposed adjacent to the edge of the package substrate **100**, in a plan view. For example, the two alignment patterns **122**AK and **122**AKe may be disposed adjacent to two edges of the package substrate **100** corresponding to each other, in a plan view, in a diagonal direction.

Each of the two alignment patterns **122**AK and **122**AKe disposed adjacent to two edges of the package substrate **100** corresponding to each other in the diagonal direction may have different shapes, in a plan view.

In some embodiments, an alignment pattern **122**AK (hereinafter referred to as a first alignment pattern) having a shape, in a plan view, shown in FIG. **4**A may be disposed adjacent to one edge of the two edges of the package substrate **100** corresponding to each other in the diagonal direction, and an alignment pattern **122**AKe (hereinafter referred to as second alignment pattern) having a shape, in a plan view, shown in FIG. **4**E may be disposed adjacently to the other edge, but the inventive concept is not necessarily limited thereto. For example, among the alignment patterns

122AK, 122AKa, 122AKb, 122AKc, 122AKd, and 122AKe shown in FIGS. 4A, 5A, 5B, 5C, 5D, and 5E, alignment patterns having different shapes, in a plan view, may be disposed on each of the two edges of the package substrate 100 corresponding to each other in the diagonal direction. Alternatively, for example, alignment patterns 122AK, 122AKa, 122AKb, 122AKc, 122AKd, and 122AKe shown in FIGS. 4A, 5A, 5B, 5C, 5D, and 5E, and an alignment pattern having a different shape, in a plan view, from among other alignment patterns having at least three vertices but having a different shape, in a plan view, may be disposed on each of the two edges of the package substrate 100 corresponding to each other in the diagonal direction.

FIG. 10 is a plan view taken from above the package substrate according to the inventive concept. Among the contents of FIG. 10, to the extent that an element has not been described in detail, it may be assumed that the element is at least similar to a corresponding element that has been described with reference to FIGS. 1 to 9.

Referring to FIG. 10, the package substrate 100 may include a chip attachment region CR on which the semiconductor chip 10 is disposed and a peripheral region PR on which the semiconductor chip 10 is not attached. In the vertical direction, the chip attachment region CR may overlap the semiconductor chip 10, and the peripheral region PR might not overlap the semiconductor chip 10. At least four alignment patterns 122AK and 122AKe may be disposed in the peripheral region PR. At least four alignment patterns 122AK and 122AKe each may be disposed adjacent to the edge of the package substrate 100, in a plan view. For example, the four alignment patterns 122AK and 122AKe may be disposed adjacent to the four edges of the package substrate 100 in a plan view.

Two alignment patterns 122AK (hereinafter referred to as a first alignment pattern) disposed adjacent to two edges of the package substrate 100 corresponding to each other in a diagonal direction may have the same shape, in a plan view, and two alignment patterns 122AKe (hereinafter referred to as a second alignment pattern) disposed adjacent to the other two edges of the package substrate 100 corresponding to each other may have a shape, in a plan view, that is different from that of the first alignment pattern 122AK, but may have different shapes, in a plan view, that are the same as each other. In some embodiments, the first alignment pattern 122AK may have a shape, in a plan view, shown in FIG. 4A, and the second alignment pattern 122AKe may have a shape, in a plan view, shown in FIG. 4E, but the inventive concept is not necessarily limited thereto.

For example, alignment patterns 122AK, 122AKa, 122AKb, 122AKc, 122AKd, and 122AKe shown in FIGS. 4A, 5A, 5B, 5C, 5D, and 5E and at least two alignment patterns having different shapes, in a plan view, among other alignment patterns having different shapes, in a plan view, and having at least three vertices may be disposed on the four edges of the package substrate 100.

While the inventive concept has been particularly shown and described with reference to embodiments thereof, it will be understood that various changes in form and details may be made therein without departing from the spirit and scope of the disclosure.

What is claimed is:

1. A package substrate, comprising:

at least one substrate base;

a plurality of wiring patterns disposed on an upper surface and a lower surface of the at least one substrate base and extending in a horizontal direction;

a plurality of wiring vias extending in a vertical direction through the at least one substrate base to electrically connect two wiring patterns positioned at different vertical levels among the plurality of wiring patterns, to each other; and

an upper surface solder resist layer having a plurality of first upper surface openings extending from an upper surface of the upper surface solder resist layer to a lower surface of the upper surface solder resist layer, and at least two second upper surface openings having a second opening width as a horizontal width that is greater than a first opening width, which is a horizontal width of the plurality of first upper surface openings, the upper surface solder resist layer covering the upper surface of the at least one substrate base,

wherein the plurality of wiring patterns comprises a plurality of upper surface connection pads disposed in the plurality of first upper surface openings on the upper surface of the at least one substrate base and having a circular or elliptical shape, and at least two alignment patterns disposed in the at least two second upper surface openings on the upper surface of the at least one substrate base and having a vertex shape,

wherein, in at least one of the plurality of first upper surface openings, a portion of the upper surface of the at least one substrate base is entirely covered by at least one of the plurality of upper surface connection pads, and

wherein, in the at least two second upper surface openings, a portion of the upper surface of the at least one substrate base is covered by the at least two alignment patterns, and the remaining portion of the upper surface of the at least one substrate base is not covered by the at least two alignment patterns.

2. The package substrate of claim 1, wherein the plurality of upper surface connection pads are disposed in a chip attachment region, and

wherein the at least two alignment patterns are disposed in a peripheral region at least partially surrounding the chip attachment region.

3. The package substrate of claim 1, wherein each of the at least two alignment patterns is adjacent to different edges of the upper surface of the at least one substrate base.

4. The package substrate of claim 1, wherein a thickness of the upper surface solder resist layer covering the upper surface of the at least one substrate base is greater than a thickness of each of the plurality of upper surface connection pads and a thickness of each of the at least two alignment patterns.

5. The package substrate of claim 1, wherein a portion of a side surface of the upper surface solder resist layer defining the at least two second upper surface openings and a portion of a side surface of the at least two alignment patterns are spaced apart from each other by a first interval that is less than the first opening width in a horizontal direction.

6. The package substrate of claim 1, wherein the second opening width is at least 5 times greater than the first opening width.

7. The package substrate of claim 1, wherein the at least two alignment patterns each have a polygonal shape, an L-shape having a width, a cross-shape having a width, or a ring-shape with refracted vertices.

8. The package substrate of claim 1, wherein the at least two alignment patterns each have at least three vertices, and

wherein the at least three vertices are convex vertices, or convex vertices and concave vertices.

9. A semiconductor package, comprising:

a package substrate having a chip attachment region and a peripheral region at least partially surrounding the chip attachment region;

a semiconductor chip that includes a first surface and a second surface opposite to each other and further includes a plurality of chip pads on the first surface, the first surface facing an upper surface of the package substrate and attached to the chip attachment region of the package substrate; and

a plurality of chip connectors attached to the plurality of chip pads,

wherein the package substrate comprises:

at least one substrate base;

an upper surface solder resist layer covering an upper surface of the at least one substrate base, having a plurality of first upper surface openings in the chip attachment region and at least two second upper surface openings in the peripheral region having a second opening width as a horizontal width that is greater than a first opening width that is a horizontal width of the plurality of first upper surface openings;

a plurality of upper surface connection pads disposed in the plurality of first upper surface openings on the upper surface of the at least one substrate base and having a circular or elliptical shape, and having the plurality of chip connectors attached thereto; and

at least two alignment patterns in the at least two second upper surface openings on the upper surface of the at least one substrate base and having a shape with at least three vertices,

wherein the upper surface solder resist layer covers all side surfaces of the plurality of upper surface connection pads, but does not cover at least a portion of side surfaces of the at least two alignment patterns.

10. The semiconductor package of claim 9, wherein the upper surface of the at least one substrate base is fully covered by at least one of the plurality of upper surface connection pads in at least one of the first upper surface openings, and a portion of the upper surface of the at least one substrate base is covered by the alignment patterns in the at least one of the two second upper surface openings and the remaining portion of the upper surface of the at least one substrate base is not covered.

11. The semiconductor package of claim 10, wherein an upper surface and a side surface of at least one of the plurality of upper surface connection pads are fully covered by the plurality of chip connectors and the upper surface solder resist layer, and

wherein an upper surface and the side surfaces of the at least two alignment patterns are not covered by the upper surface solder resist layer and are externally exposed.

12. The semiconductor package of claim 9, wherein each of the at least two alignment patterns is adjacent to different edges of the upper surface of the at least one substrate base.

13. The semiconductor package of claim 9, wherein at least one of the plurality of upper surface connection pads has a first horizontal width equal to or greater than the first opening width, and

wherein the alignment patterns have a second horizontal width that is greater than the first horizontal width.

14. The semiconductor package of claim 13, wherein a portion of a side surface of the upper surface solder resist layer defining the at least two second upper surface openings and a portion of the side surfaces of the at least two alignment patterns are spaced apart from each other by a first interval that is less than the first opening width in a horizontal direction.

15. The semiconductor package of claim 9, wherein the package substrate further comprises:

a lower surface solder resist layer covering a lower surface of the at least one substrate base and having a plurality of lower surface openings; and

a plurality of lower surface connection pads in the plurality of lower surface openings on the lower surface of the at least one substrate base, having a plurality of external connection terminals attached, and electrically connected to the plurality of upper surface connection pads.

16. The semiconductor package of claim 15, wherein the plurality of lower surface connection pads are on the lower surface of the at least one substrate base in the chip attachment region and the peripheral region.

17. The semiconductor package of claim 9, wherein an upper surface of the upper surface solder resist layer is located at a vertical level that is higher than an upper surface of each of the upper surface connection pad and the at least two alignment patterns.

18. A semiconductor package, comprising:

a package substrate having a chip attachment region and a peripheral region at least partially surrounding the chip attachment region;

a semiconductor chip including a first surface and a second surface opposite to each other and further includes a plurality of chip pads disposed on the first surface, the first surface facing an upper surface of the package substrate and attached to the chip attachment region of the package substrate; and

a plurality of chip connectors attached to the plurality of chip pads,

wherein the package substrate comprises:

at least one substrate base;

an upper surface solder resist layer covering an upper surface of the at least one substrate base and having a plurality of first upper surface openings in the chip attachment region and at least two second upper surface openings having a second opening width that is greater than a first opening width that is a horizontal width of the plurality of first upper surface openings and disposed in the peripheral region;

a lower surface solder resist layer covering a lower surface of the at least one substrate base and having a plurality of lower surface openings in the chip attachment region and the peripheral region;

a plurality of upper surface connection pads in the plurality of first upper surface openings disposed on the upper surface of the at least one substrate base and having a circular or elliptical shape, and having the plurality of chip connectors thereto;

at least two alignment patterns disposed in the at least two second upper surface openings on the upper surface of the at least one substrate base and having a shape with at least three vertices;

a plurality of lower surface connection pads disposed in the plurality of lower surface openings on the lower surface of the at least one substrate base; and

a plurality of external connection terminals attached to the plurality of lower surface connection pads,

wherein the upper surface solder resist layer covers all side surfaces of the plurality of upper surface connection pads, but does not cover at least a portion of side surfaces of the at least two alignment patterns, and

wherein a portion of a side surface of the upper surface solder resist layer defining the at least two second upper surface openings and a portion of the side surfaces of the at least two alignment patterns are spaced apart from each other by a first interval that is less than the first opening width in a horizontal direction.

19. The semiconductor package of claim **18**, wherein the plurality of upper surface connection pads and the at least two alignment patterns include a same material.

20. The semiconductor package of claim **18**, wherein the first opening width is from about 50 μm to about 150 μm, and

wherein the second opening width is at least **5** times greater than the first opening width, and is about 250 μm to about 1000 μm.

* * * * *