US012387772B2

(12) **United States Patent**
Huang et al.

(10) **Patent No.: US 12,387,772 B2**
(45) **Date of Patent: Aug. 12, 2025**

(54) **STRUCTURE AND METHOD FOR MRAM DEVICES WITH A SLOT VIA**

(71) Applicant: **Taiwan Semiconductor Manufacturing Co., Ltd.**, Hsin-Chu (TW)

(72) Inventors: **Chih-Fan Huang**, Kaohsiung (TW); **Hsiang-Ku Shen**, Hsinchu (TW); **Liang-Wei Wang**, Hsinchu (TW); **Dian-Hau Chen**, Hsinchu (TW); **Yen-Ming Chen**, Hsin-Chu County (TW)

(73) Assignee: **TAIWAN SEMICONDUCTOR MANUFACTURING CO., LTD.**, Hsinchu (TW)

(*) Notice: Subject to any disclaimer, the term of this patent is extended or adjusted under 35 U.S.C. 154(b) by 830 days.

(21) Appl. No.: **17/322,560**

(22) Filed: **May 17, 2021**

(65) **Prior Publication Data**

US 2022/0044717 A1 Feb. 10, 2022

Related U.S. Application Data

(60) Provisional application No. 63/063,783, filed on Aug. 10, 2020.

(51) **Int. Cl.**
G11C 11/16 (2006.01)
H01L 23/522 (2006.01)
(Continued)

(52) **U.S. Cl.**
CPC ***G11C 11/161*** (2013.01); ***H01L 23/5226*** (2013.01); ***H10B 61/00*** (2023.02);
(Continued)

(58) **Field of Classification Search**
CPC H10B 61/00; H10B 61/22; G11C 11/161; H10N 50/80; H10N 50/01; H10N 50/85; H10N 50/10; H01L 23/5226
See application file for complete search history.

(56) **References Cited**

U.S. PATENT DOCUMENTS

6,873,535 B1 3/2005 Wang et al.
6,946,698 B1 9/2005 Lin
(Continued)

FOREIGN PATENT DOCUMENTS

JP 2007158301 A 6/2007
KR 20120025523 A 3/2012
(Continued)

OTHER PUBLICATIONS

Hsiang-Ku Shen et al., "Semiconductor Memory Device and Method of Forming the Same", U.S. Appl. No. 16/998,911, filed Aug. 20, 2020, Assignee: Taiwan Semiconductor Manufacturing Co., Ltd., 22 pages specification, 20 pages drawings.

Primary Examiner — Antonio B Crite
(74) *Attorney, Agent, or Firm* — HAYNES AND BOONE, LLP

(57) **ABSTRACT**

A semiconductor structure includes a third metal layer immediately above a second metal layer that is over a first metal layer. The second metal layer includes magnetic tunneling junction (MTJ) devices in a memory region and a first conductive feature in a logic region. Each MTJ device includes a bottom electrode and an MTJ stack over the bottom electrode. The third metal layer includes a first via electrically connecting to the first conductive feature, and a slot via over and electrically connecting to the MTJ stack of the MTJ devices. The slot via occupies space extending continuously and laterally from a first one to a last one of the MTJ devices. The first via is as thin as or thinner than the slot
(Continued)

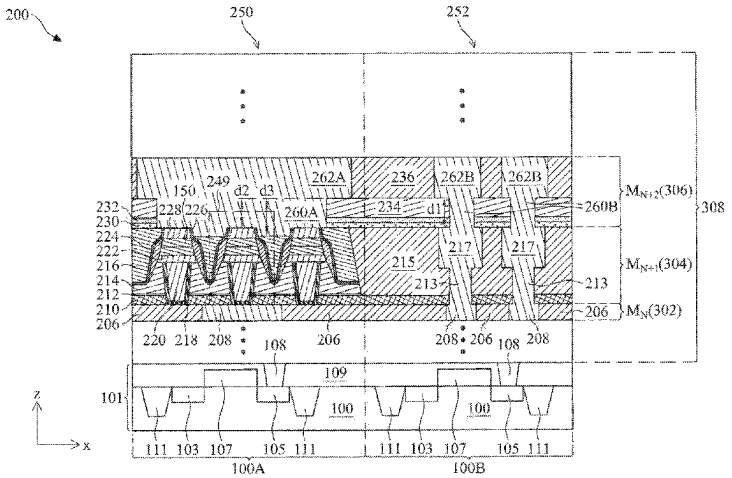

via. The third metal layer further includes second and third conductive features electrically connecting to the first via and the slot via, respectively.

20 Claims, 32 Drawing Sheets

(51) **Int. Cl.**

H10B 61/00	(2023.01)
H10N 50/01	(2023.01)
H10N 50/10	(2023.01)
H10N 50/80	(2023.01)
H10N 50/85	(2023.01)

(52) **U.S. Cl.**
CPC ***H10B 61/22*** (2023.02); ***H10N 50/01*** (2023.02); ***H10N 50/10*** (2023.02); ***H10N 50/80*** (2023.02); ***H10N 50/85*** (2023.02)

(56) **References Cited**

U.S. PATENT DOCUMENTS

7,099,176	B2	8/2006	Tang et al.	
7,170,775	B2	1/2007	Tang et al.	
8,709,956	B2	4/2014	Satoh et al.	
9,818,935	B2	11/2017	Chuang et al.	
10,056,543	B2	8/2018	Bak et al.	
10,270,025	B2	4/2019	Chuang et al.	
10,297,750	B1	5/2019	Ando et al.	
2007/0023806	A1	2/2007	Gaidis et al.	
2012/0306033	A1	12/2012	Satoh et al.	
2017/0170386	A1	6/2017	Chuang	
2018/0108832	A1*	4/2018	Chuang	H10N 50/80
2019/0165258	A1	5/2019	Peng et al.	
2019/0371996	A1	12/2019	Chuang	
2020/0075669	A1	3/2020	Chuang et al.	
2020/0098978	A1	3/2020	Liao	
2020/0106008	A1	4/2020	Peng	
2020/0119088	A1	4/2020	Hashemi et al.	
2020/0176041	A1	6/2020	Shen	
2020/0251649	A1	8/2020	Sung	
2021/0074907	A1*	3/2021	Wang	H10N 50/80

FOREIGN PATENT DOCUMENTS

KR	20190135903	A	12/2019
KR	20200037058		4/2020
TW	201729414	A	8/2017
TW	201806114	A	2/2018
WO	2010132773	A1	11/2010

* cited by examiner

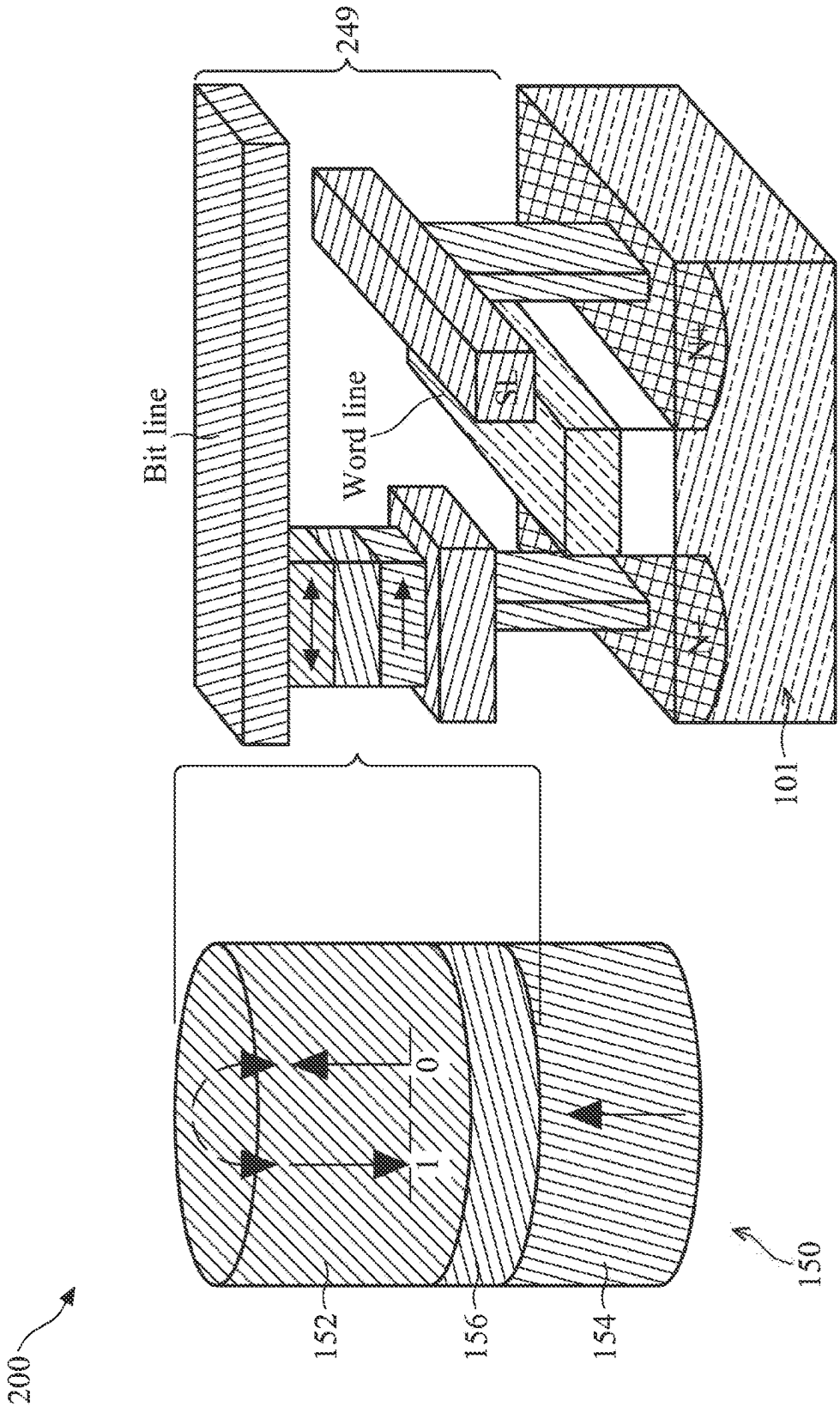

FIG. 1A

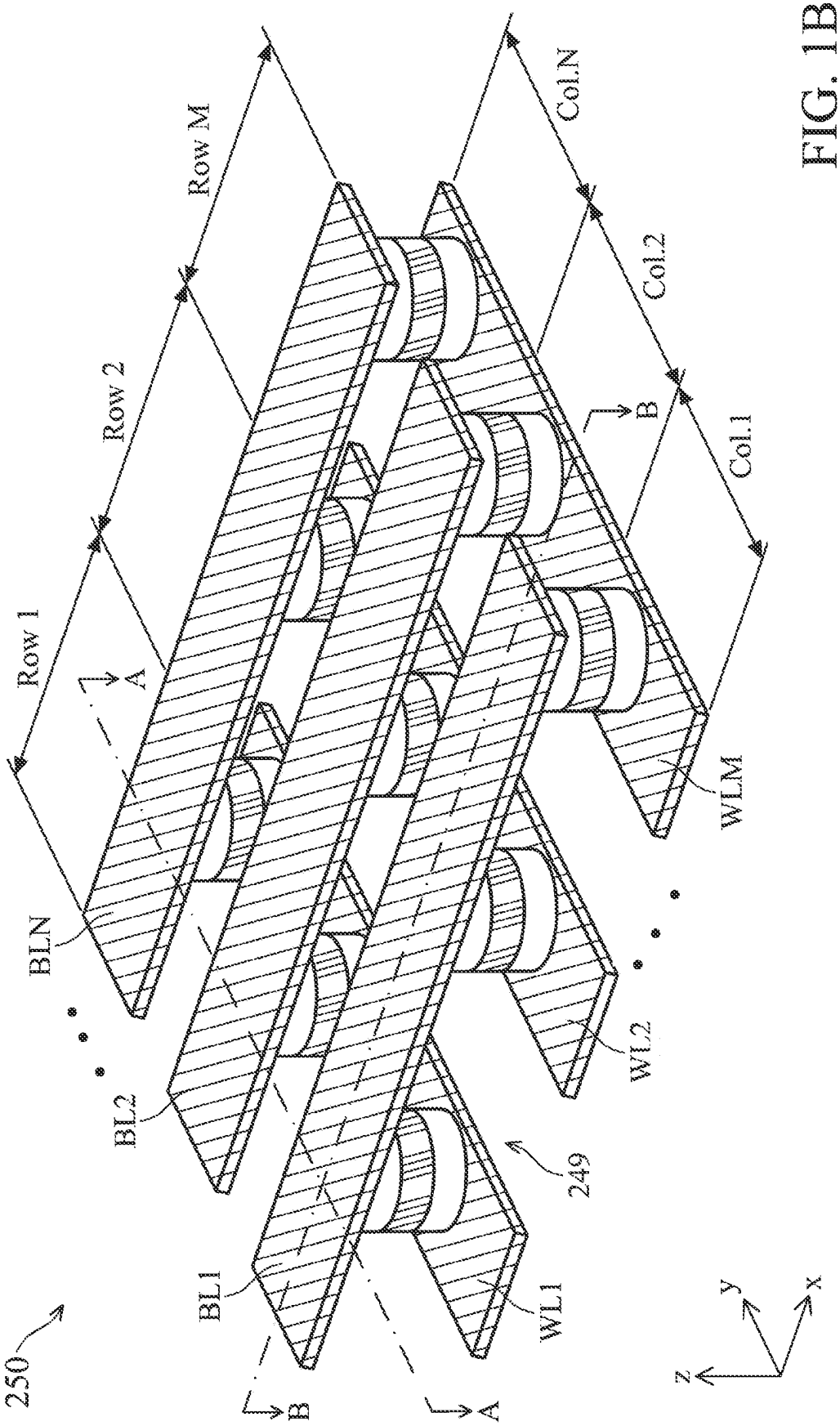
Row 1
Row 2
Row M
Col.1
Col.2
Col.N
A
B
BLN
BL2
BL1
WLM
WL2
WL1
249
250
z
y
x

FIG. 1B

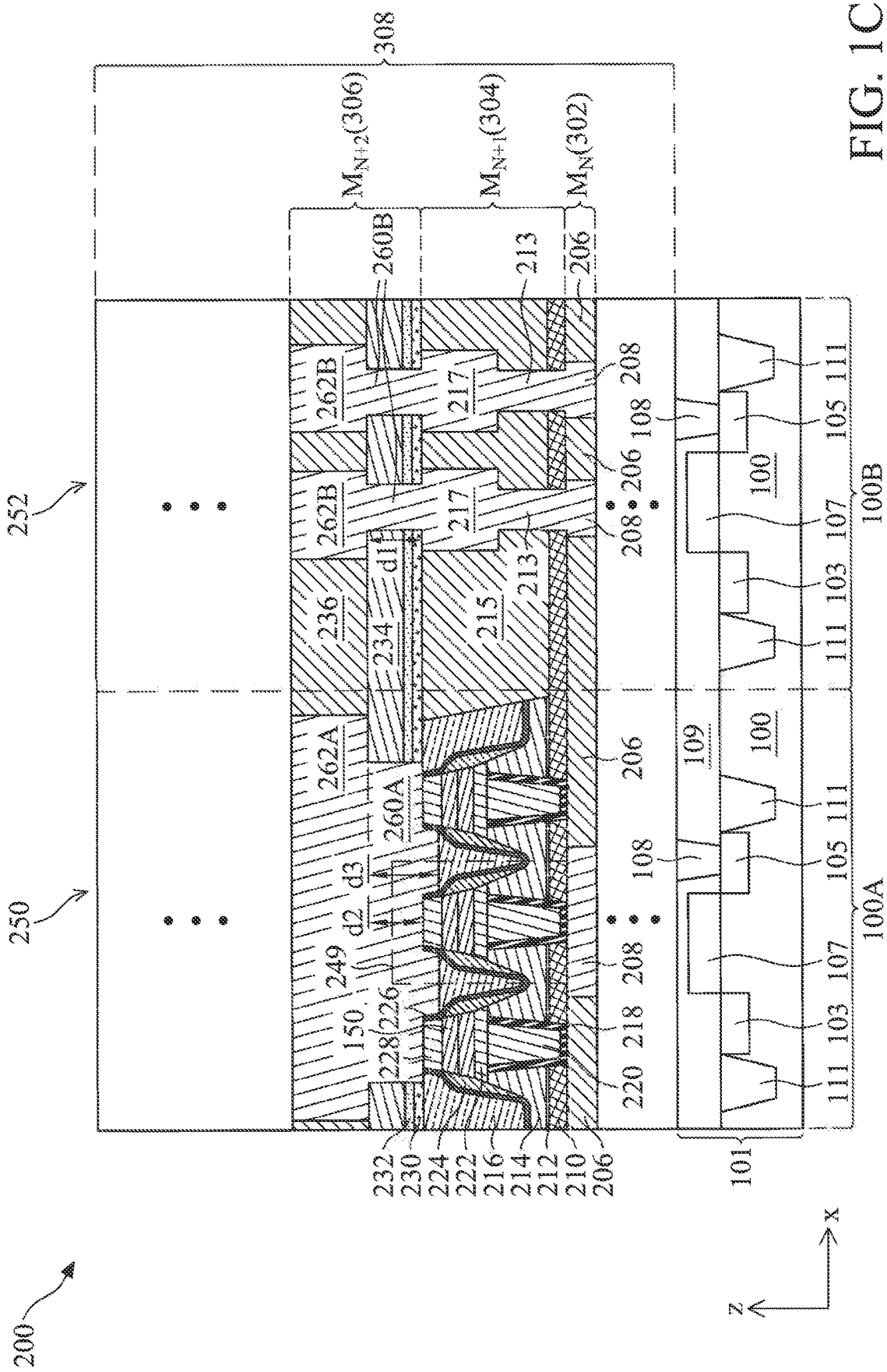
308
M_{N+2}(306)
M_{N+1}(304)
M_N(302)
260B
213
206
262B
217
208
108
105
111
100
107
100B
103
236
234
d1
215
262A
260A
109
d3
d2
249
150
226
228
218
220
100A
101
232
230
224
222
216
214
212
210
252
250
200
x
z

FIG. 1C

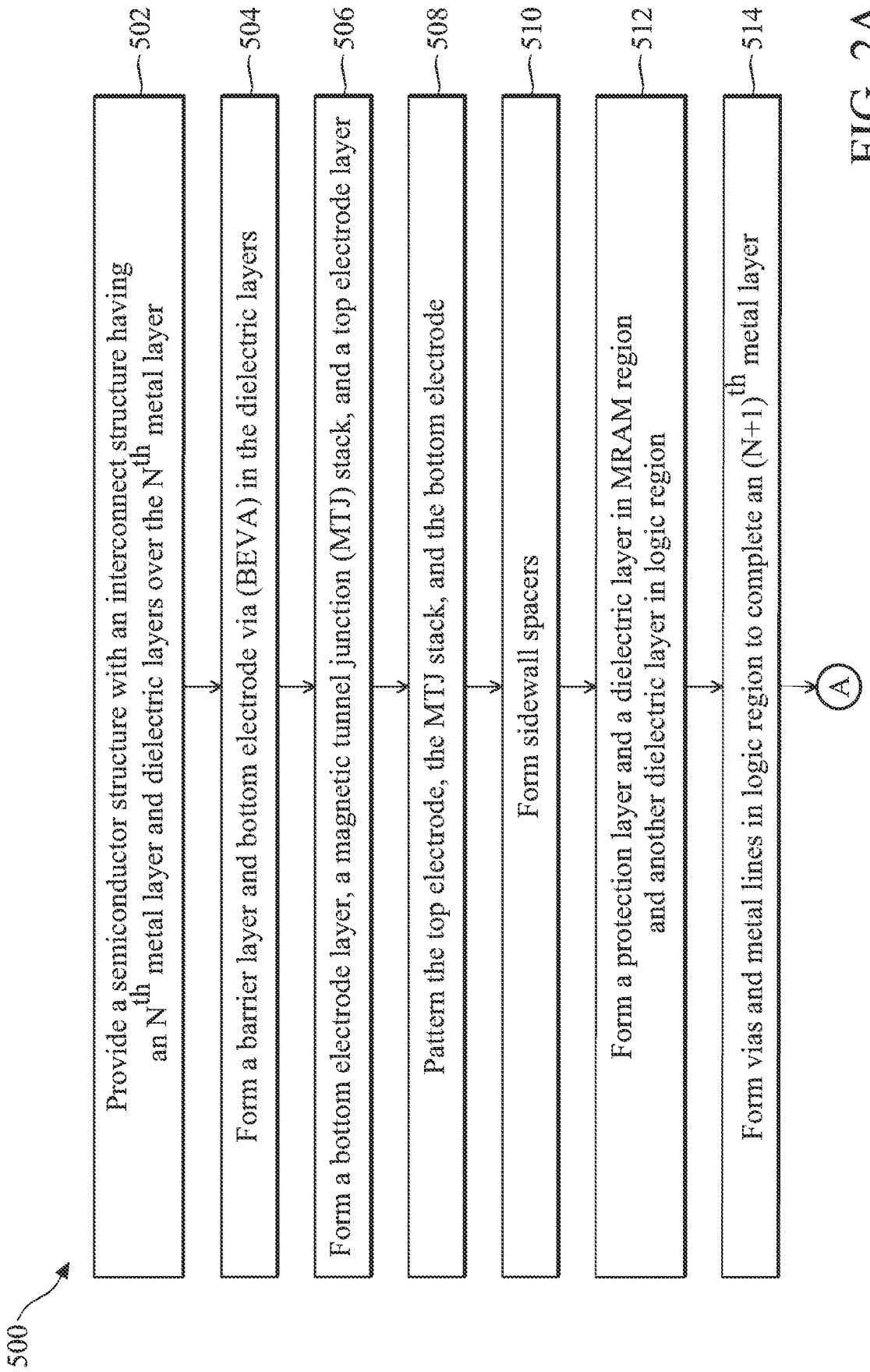
500
502
Provide a semiconductor structure with an interconnect structure having an Nth metal layer and dielectric layers over the Nth metal layer
504
Form a barrier layer and bottom electrode via (BEVA) in the dielectric layers
506
Form a bottom electrode layer, a magnetic tunnel junction (MTJ) stack, and a top electrode layer
508
Pattern the top electrode, the MTJ stack, and the bottom electrode
510
Form sidewall spacers
512
Form a protection layer and a dielectric layer in MRAM region and another dielectric layer in logic region
514
Form vias and metal lines in logic region to complete an $(N+1)^{th}$ metal layer
A

FIG. 2A

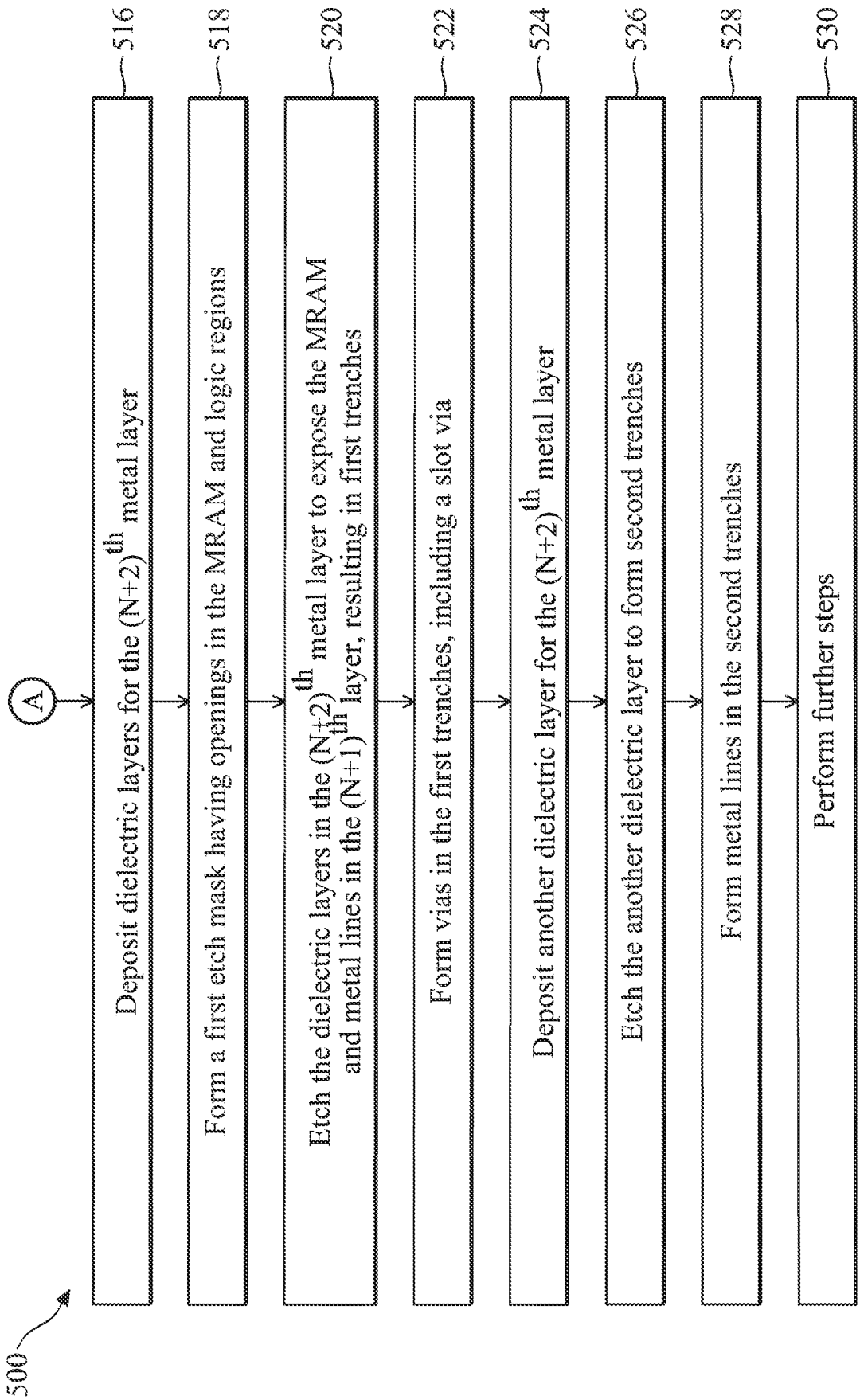
500
A
516
Deposit dielectric layers for the (N+2)th metal layer
518
Form a first etch mask having openings in the MRAM and logic regions
520
Etch the dielectric layers in the (N+2)th metal layer to expose the MRAM and metal lines in the (N+1)th layer, resulting in first trenches
522
Form vias in the first trenches, including a slot via
524
Deposit another dielectric layer for the (N+2)th metal layer
526
Etch the another dielectric layer to form second trenches
528
Form metal lines in the second trenches
530
Perform further steps

FIG. 2B

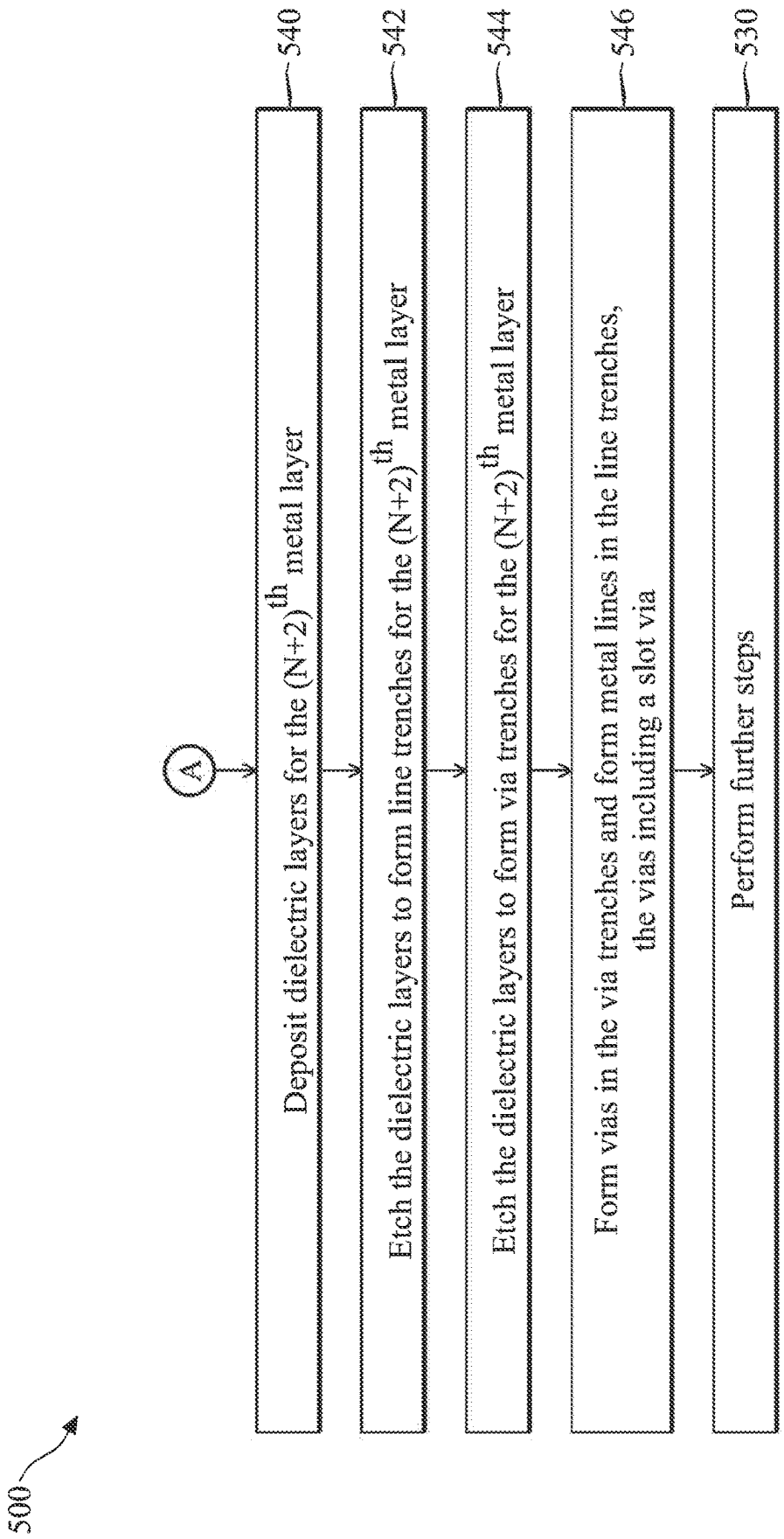
500
A
Deposit dielectric layers for the (N+2)th metal layer
540
Etch the dielectric layers to form line trenches for the (N+2)th metal layer
542
Etch the dielectric layers to form via trenches for the (N+2)th metal layer
544
Form vias in the via trenches and form metal lines in the line trenches, the vias including a slot via
546
Perform further steps
530

FIG. 2C

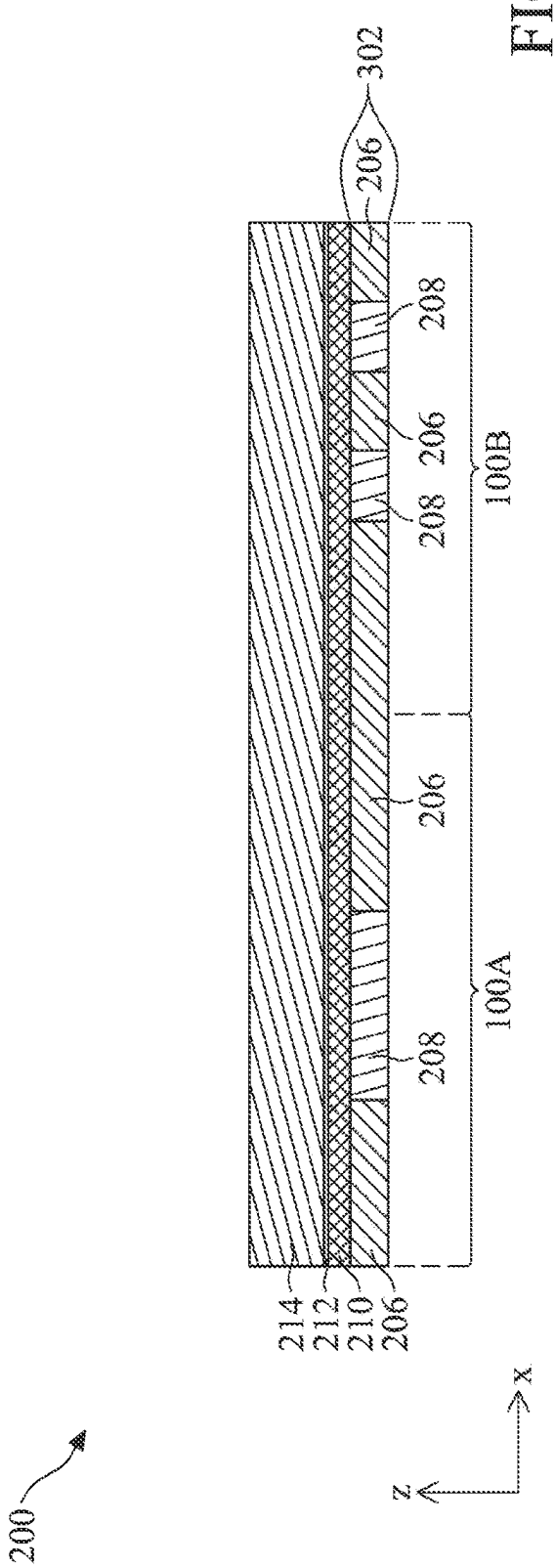
200
z
x
214
212
210
206
208
100A
206
208
206
100B
206
302

FIG. 3A

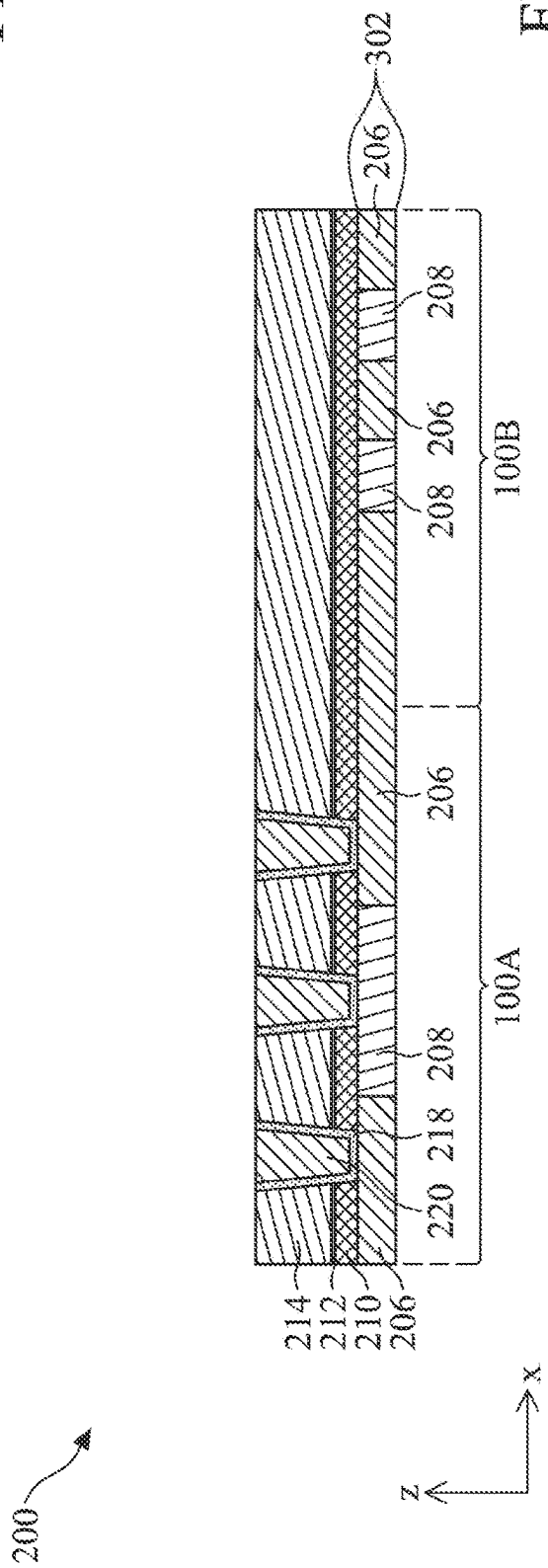
200
z
x
214
212
210
206
220
218
208
100A
206
208
206
100B
206
302

FIG. 3B

FIG. 3C

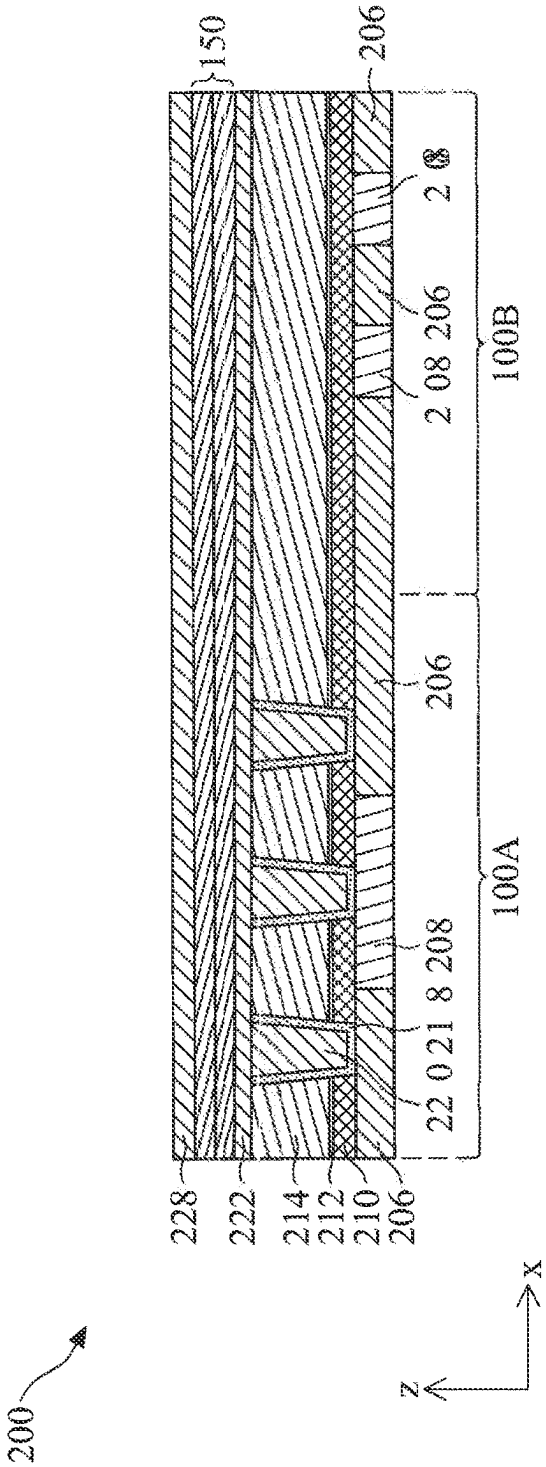
150
206
2 08
206
2 08
100B
206
100A
208
8
21
0
22
228
222
214
212
210
206
x
z
200

FIG. 3D

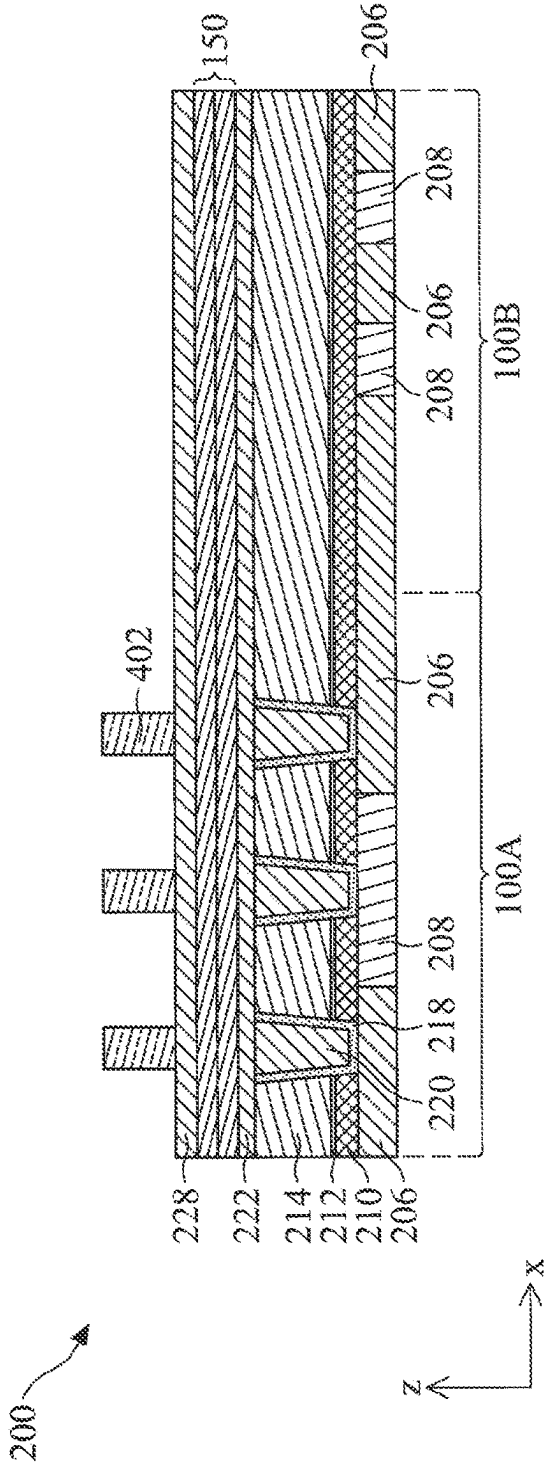
150
206
208
206
208
100B
402
206
100A
208
218
220
228
222
214
212
210
206
x
z
200

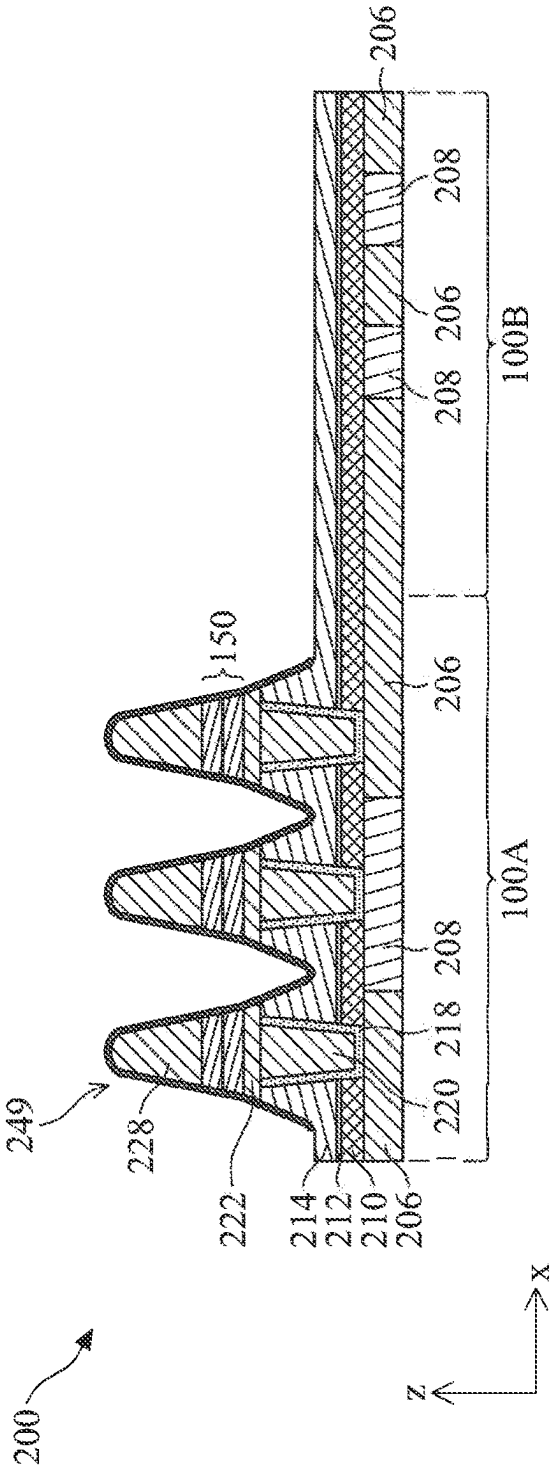
200
249
228
222
150
214
212
210
206
220
218
208
206
208
206
208
100A
100B
z
x

FIG. 3E

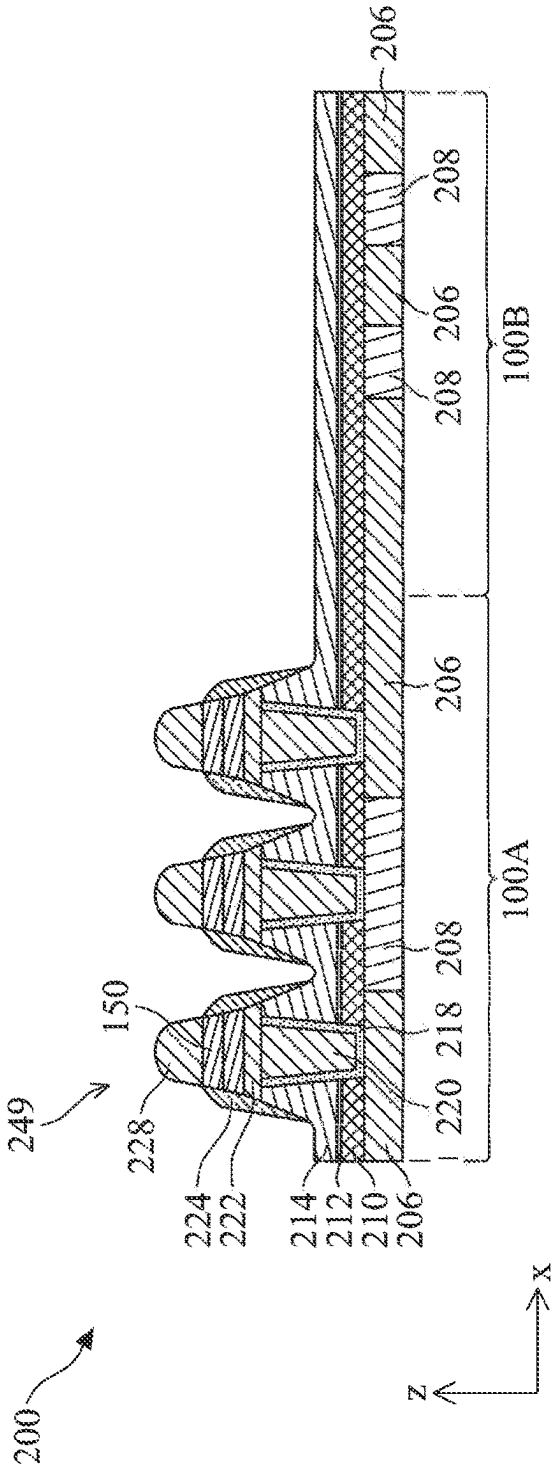
200
249
228
224
222
150
214
212
210
206
220
218
208
206
208
206
208
100A
100B
z
x

FIG. 3F

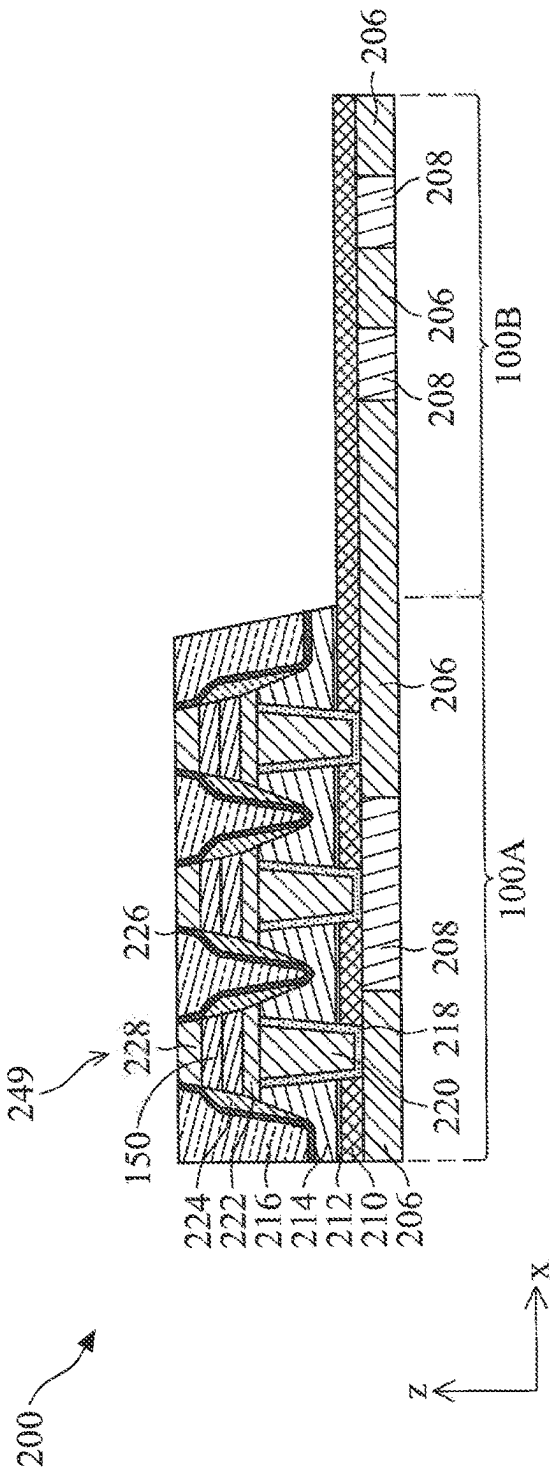
200
249
150
228
226
224
222
216
214
212
210
206
220
218
208
206
100A
208
206
208
206
100B
z
x

FIG. 3G

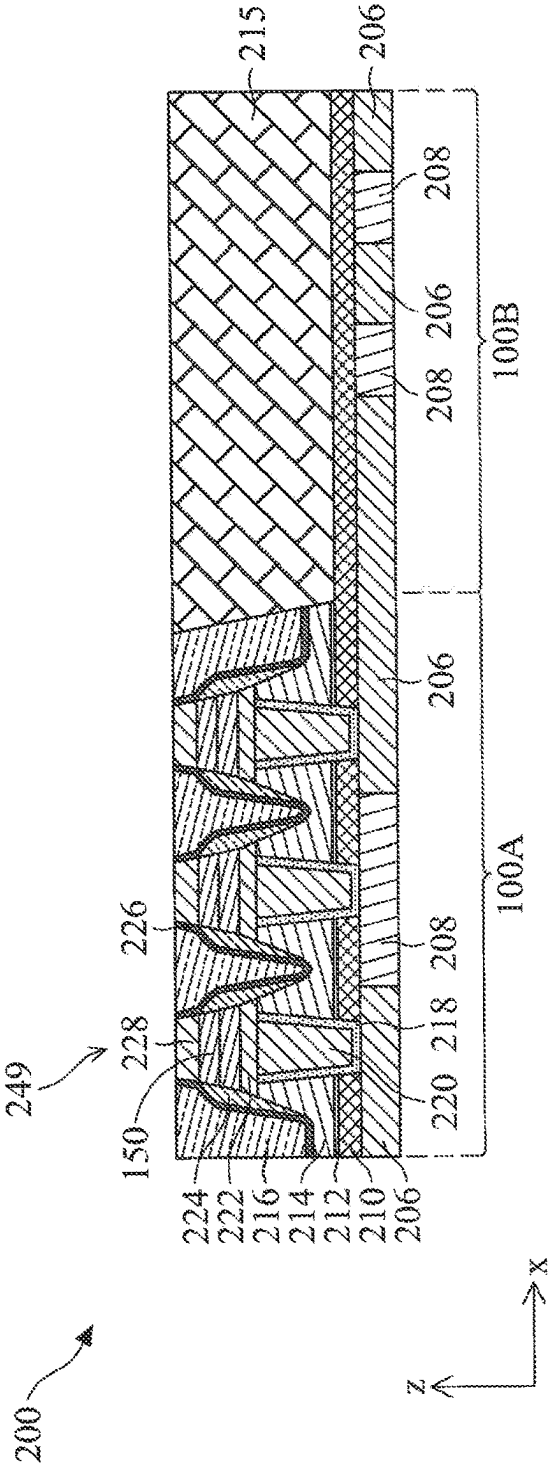
200
249
150
228
226
224
222
216
214
212
210
206
220
218
208
206
100A
208
206
208
206
215
100B
z
x

FIG. 3H

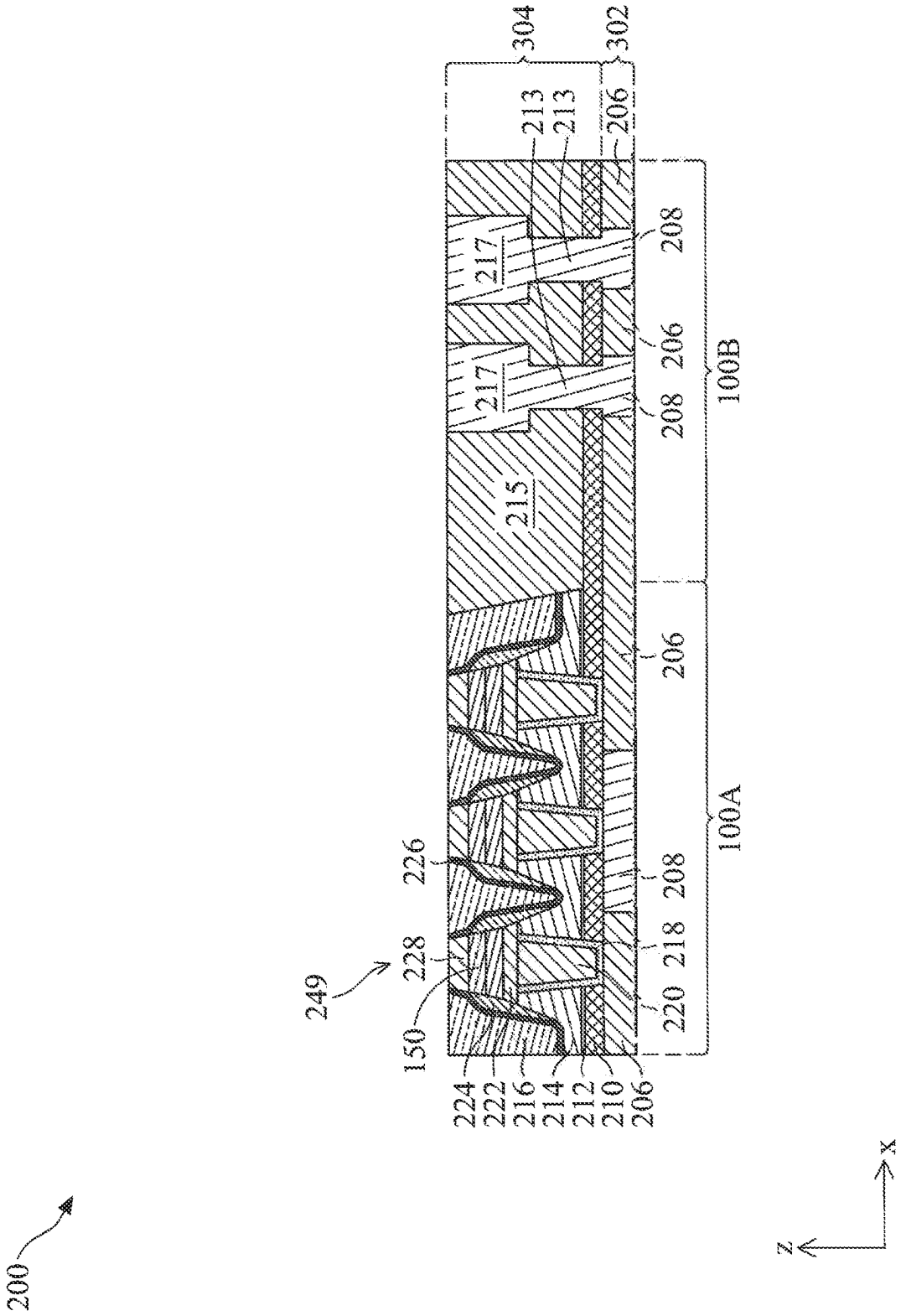
200
249
150
228
226
224
222
216
214
212
210
206
220
218
208
206
100A
215
217
217
208
206
208
100B
213
213
206
302
304
x
z

FIG. 3I

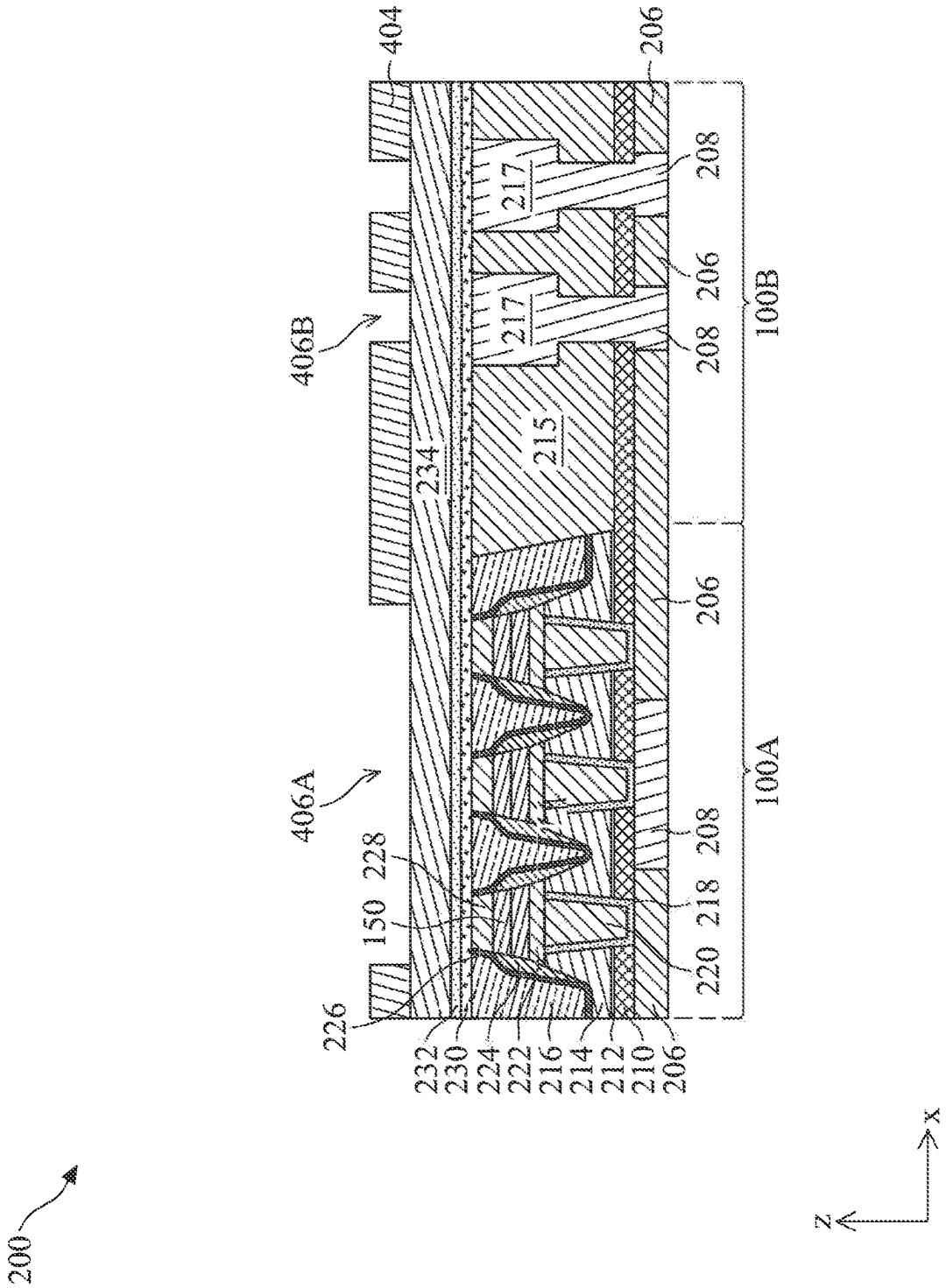
404
206
208
217
206
217
208
100B
406B
215
234
206
406A
100A
208
228
150
218
220
226
232
230
224
222
216
214
212
210
206
200
x
z

FIG. 3J

FIG. 3K

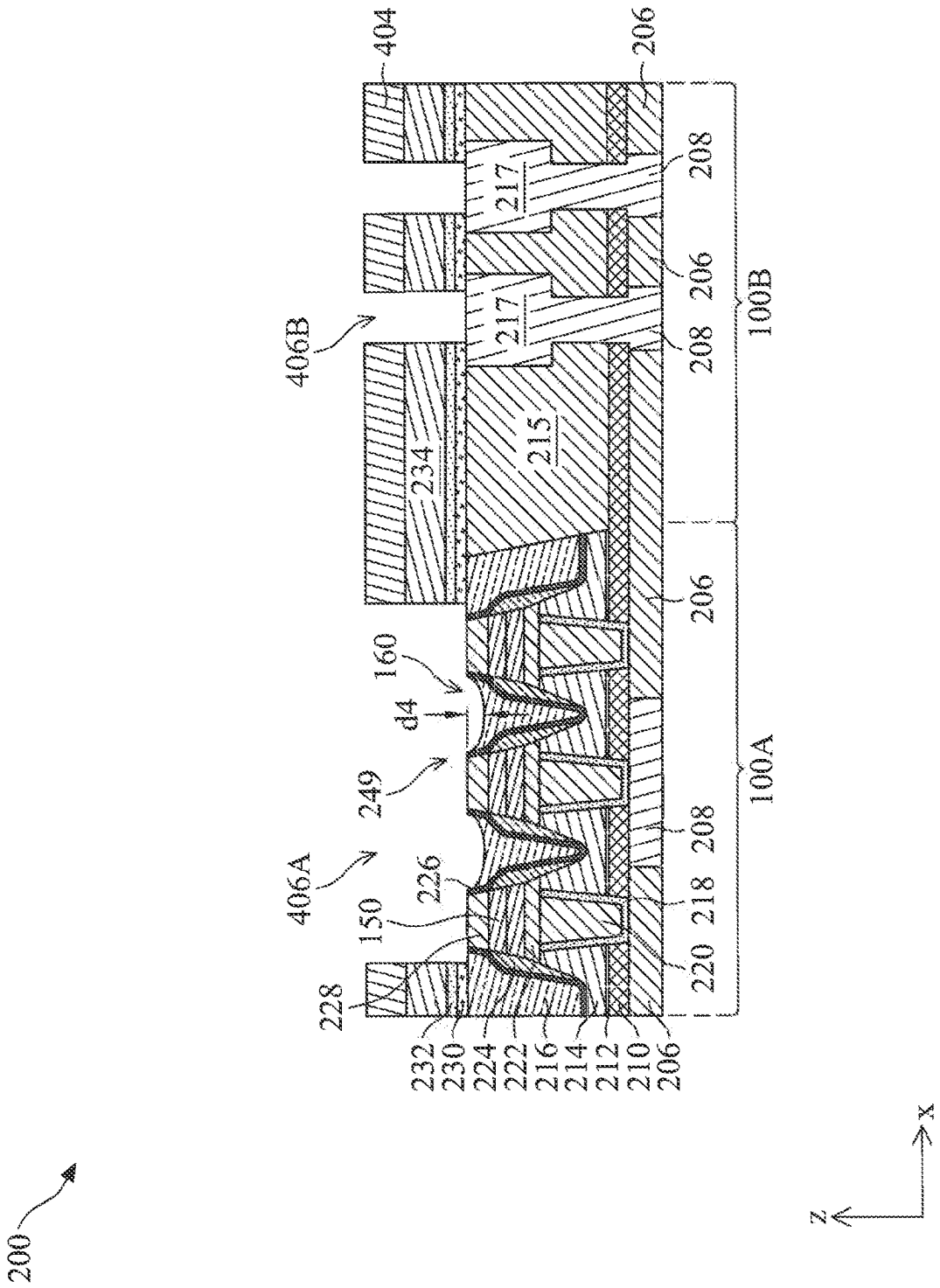
404
206
208
217
217
206
208
406B
100B
234
215
206
160
d4
249
100A
208
406A
226
218
150
220
228
232
230
224
222
216
214
212
210
206
200
x
z

FIG. 3K-1

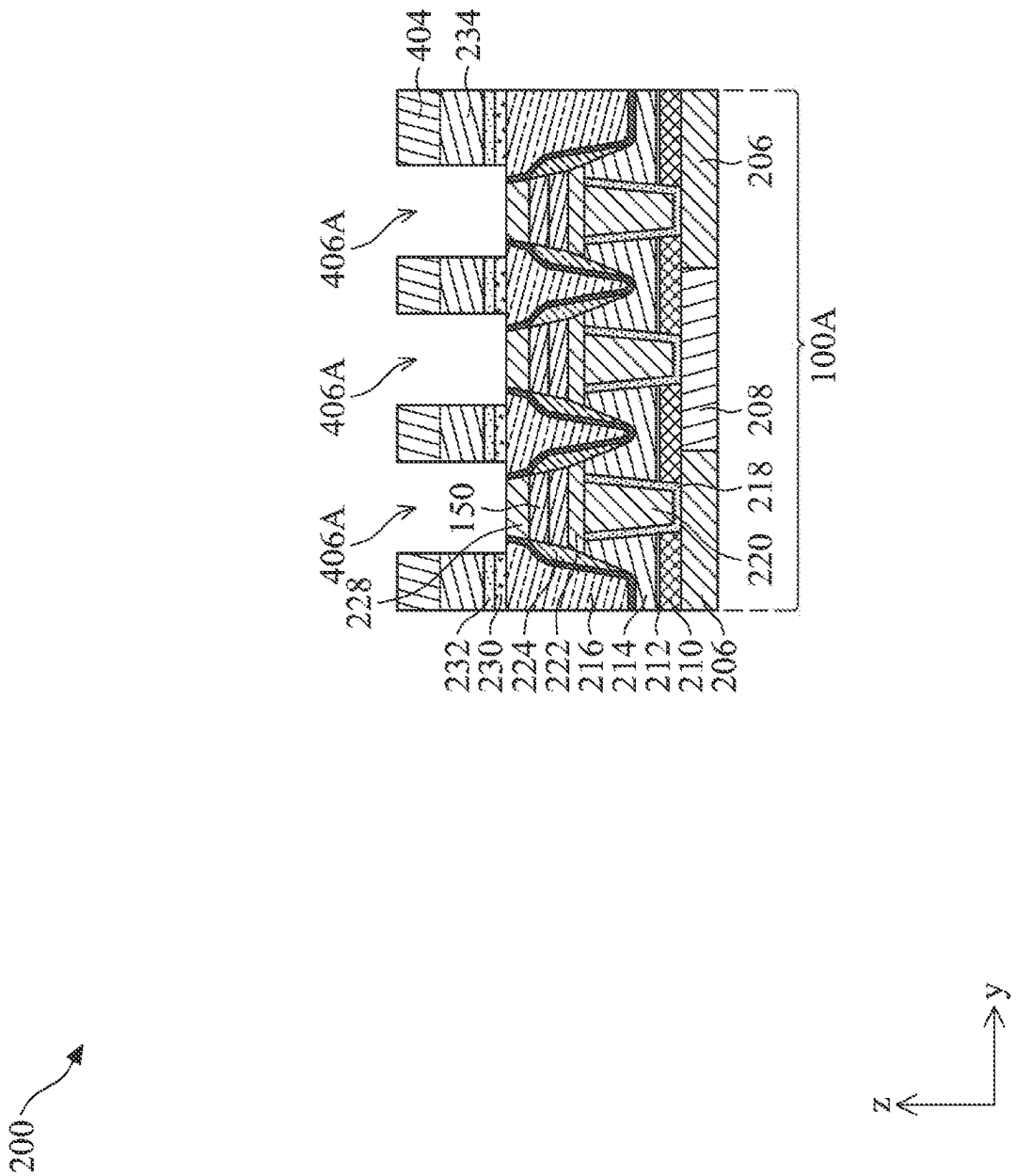
200
404
234
406A
406A
406A
228
150
232
230
224
222
216
214
212
210
206
220
218
208
206
100A
z
y

FIG. 3L

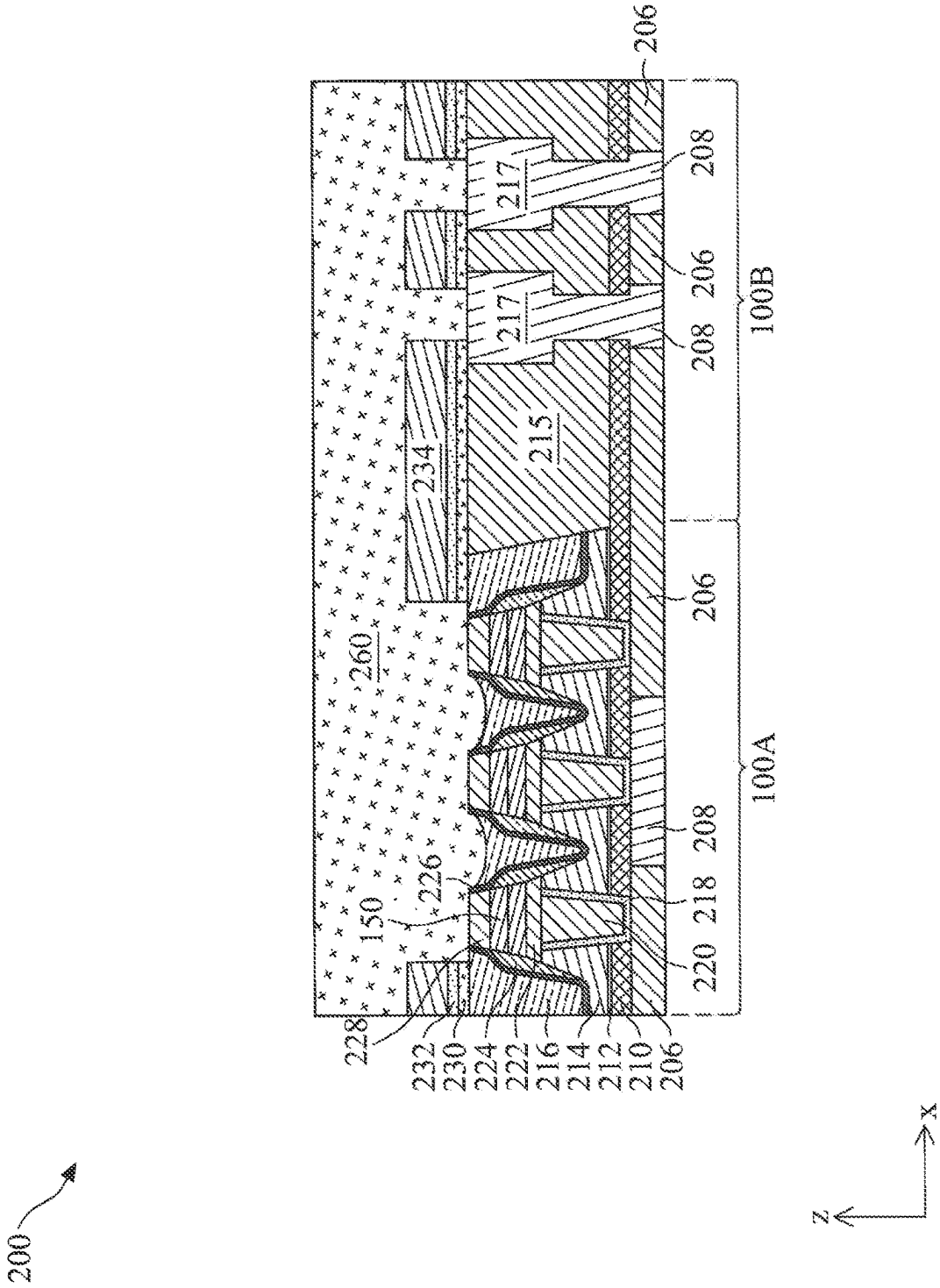
200
206
208
217
217
206
208
100B
215
234
206
260
100A
208
226
150
218
220
228
232
230
224
222
216
214
212
210
206
x
z

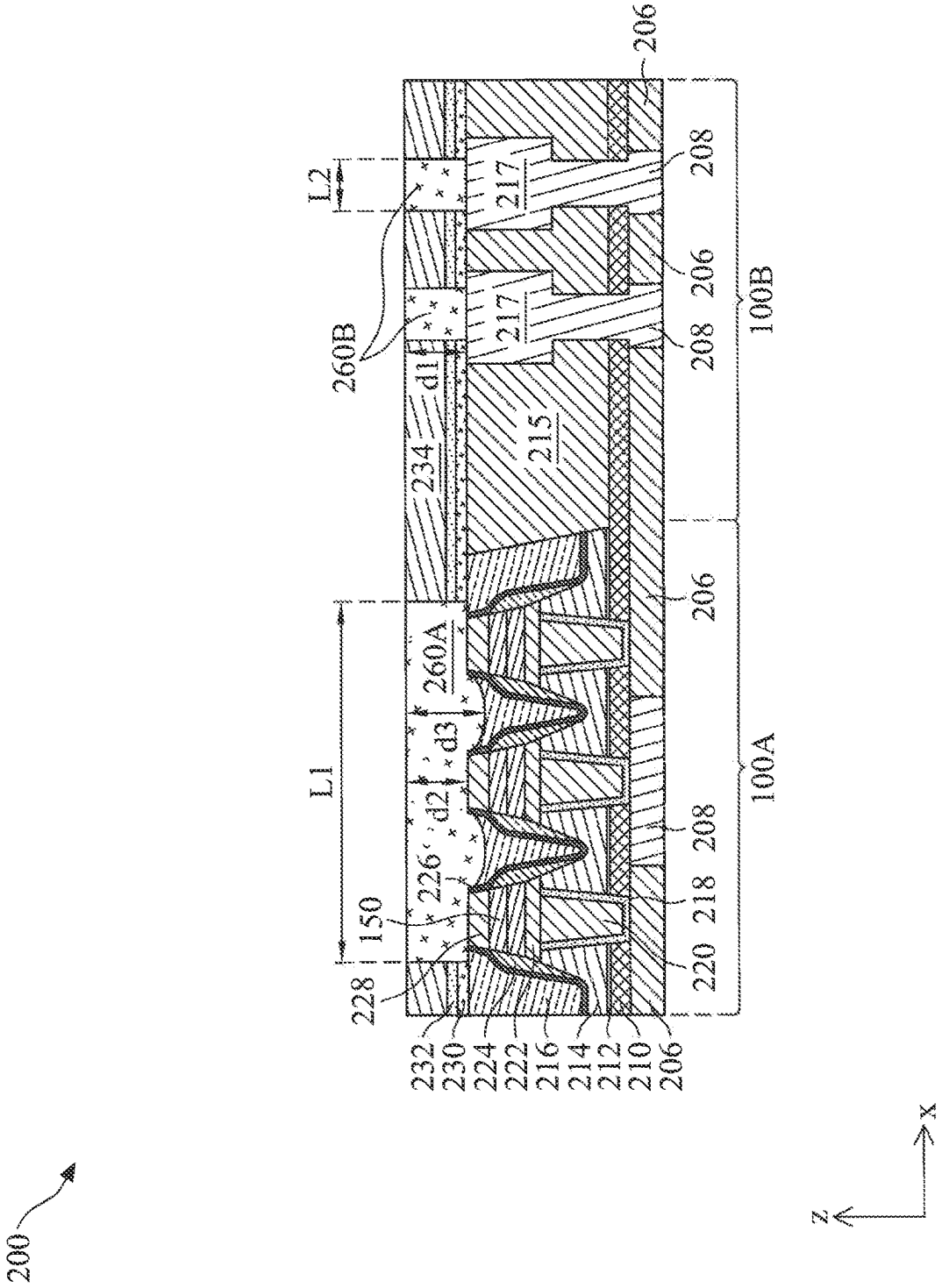
200
L1
L2
150
228
226
d2
d3
260A
260B
234
d1
215
217
217
206
208
206
208
100B
206
208
218
220
100A
232
230
224
222
216
214
212
210
206
x
z

FIG. 3M

FIG. 3M-1

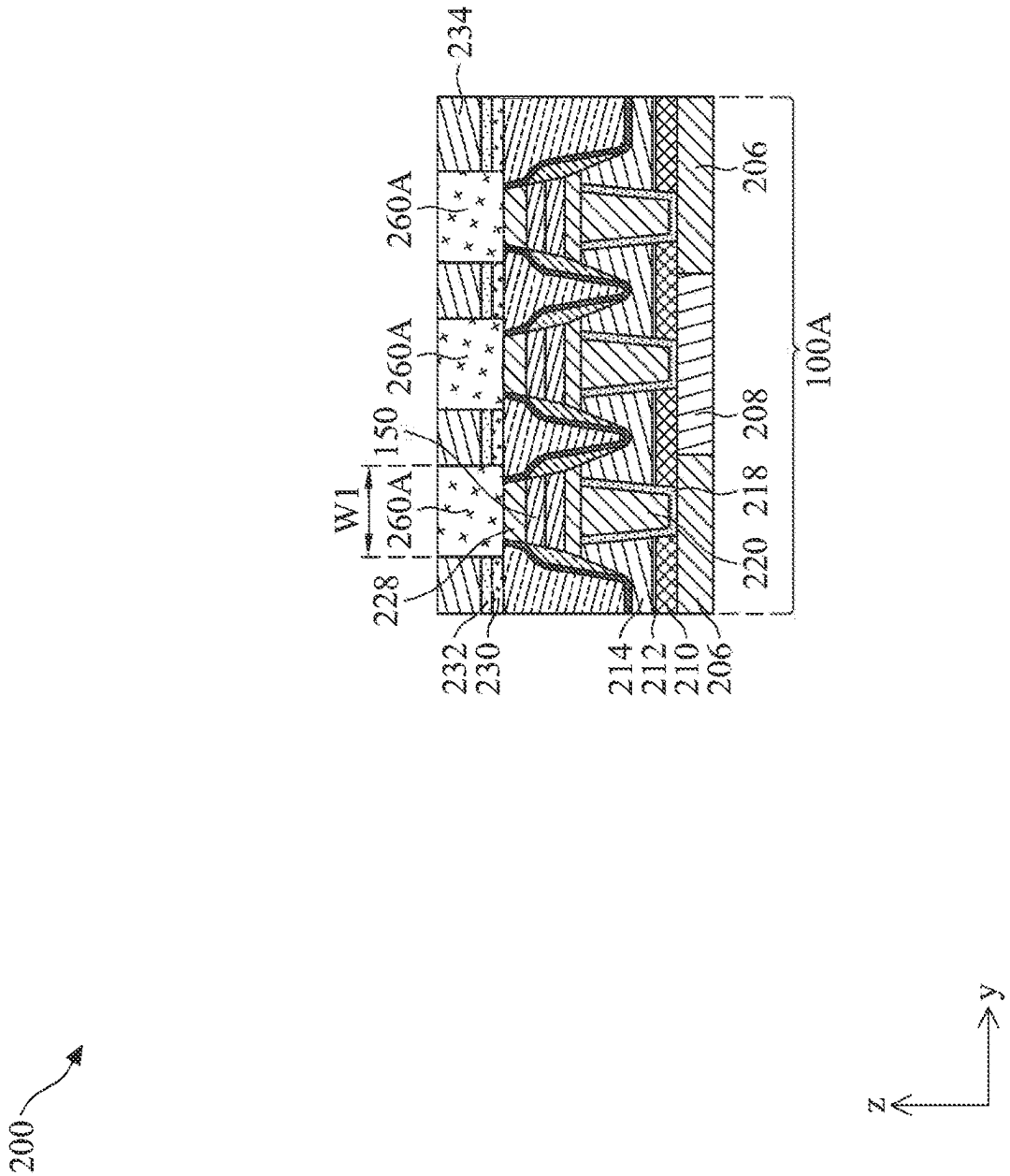
234
260A
260A
150
W1
260A
228
232
230
214
212
210
206
206
208
218
220
100A
200
z
y

FIG. 3N

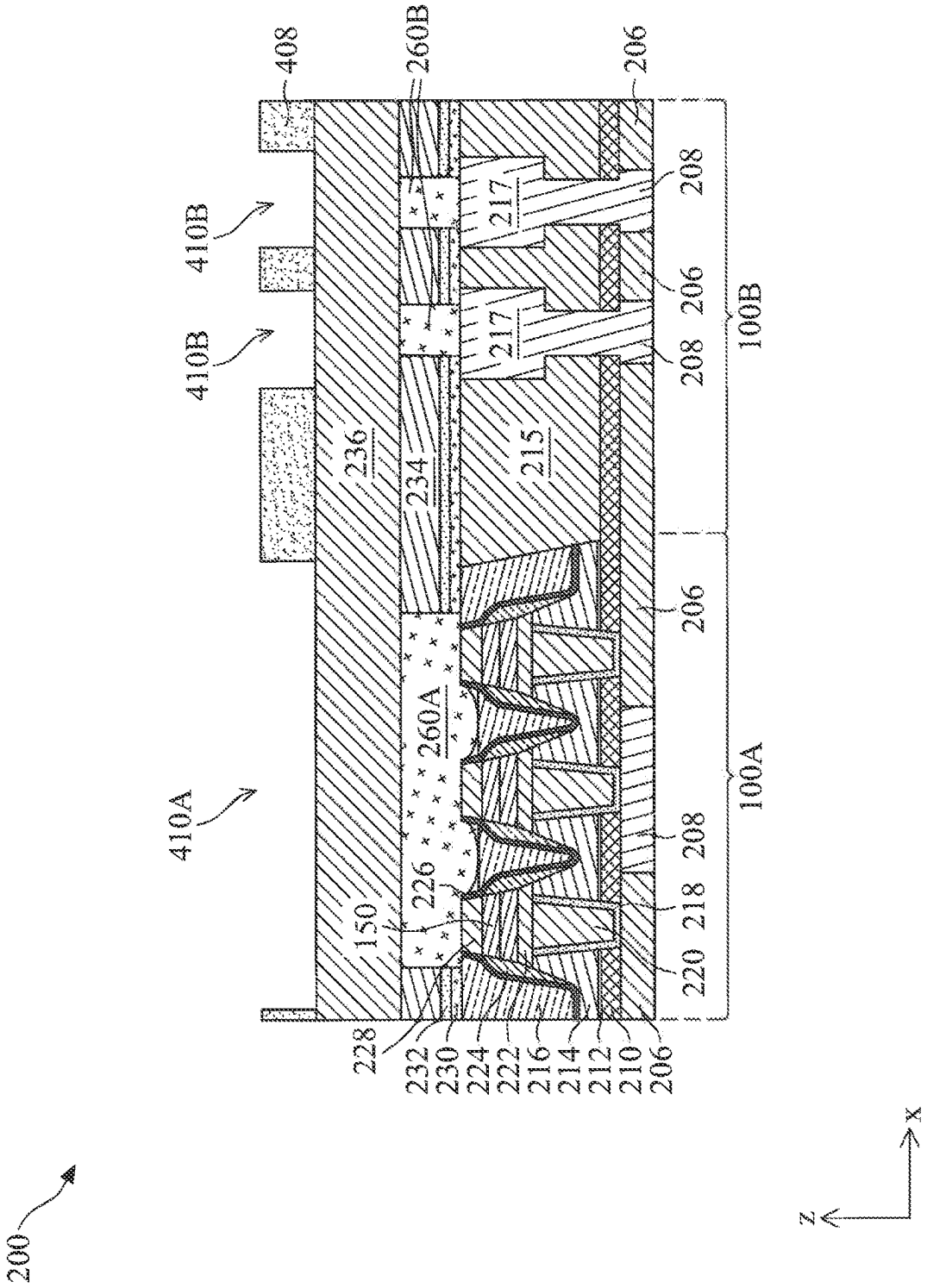
408
260B
206
410B
410B
217
217
208
206
208
100B
236
234
215
206
260A
410A
226
150
208
218
220
100A
228
232
230
224
222
216
214
212
210
206
200
x
z

FIG. 3O

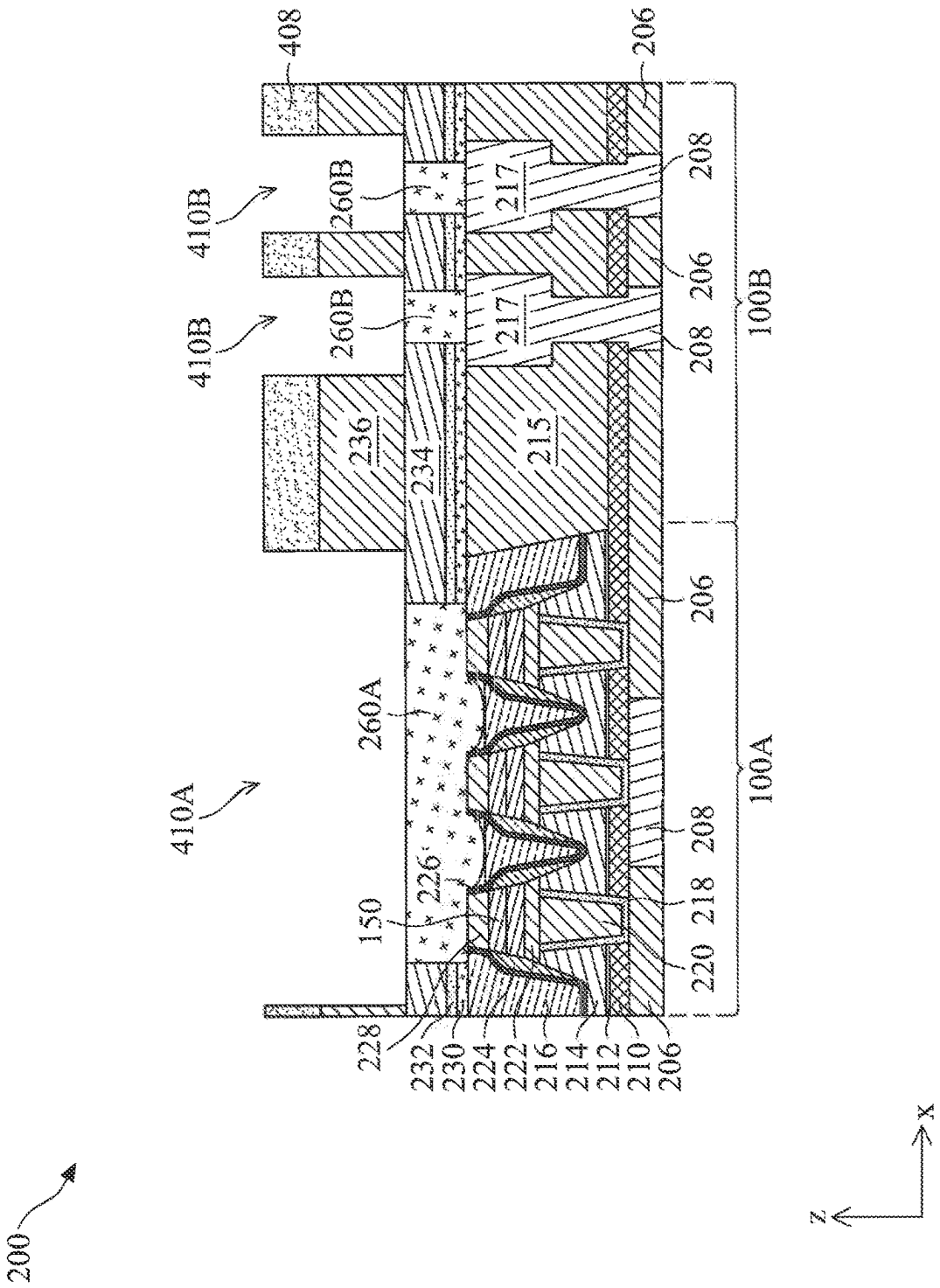
200
410A
410B
410B
408
260A
260B
260B
150
226
236
234
217
217
215
228
232
230
224
222
216
214
212
210
206
220
218
208
206
208
206
208
206
100A
100B
z
x

FIG. 3P

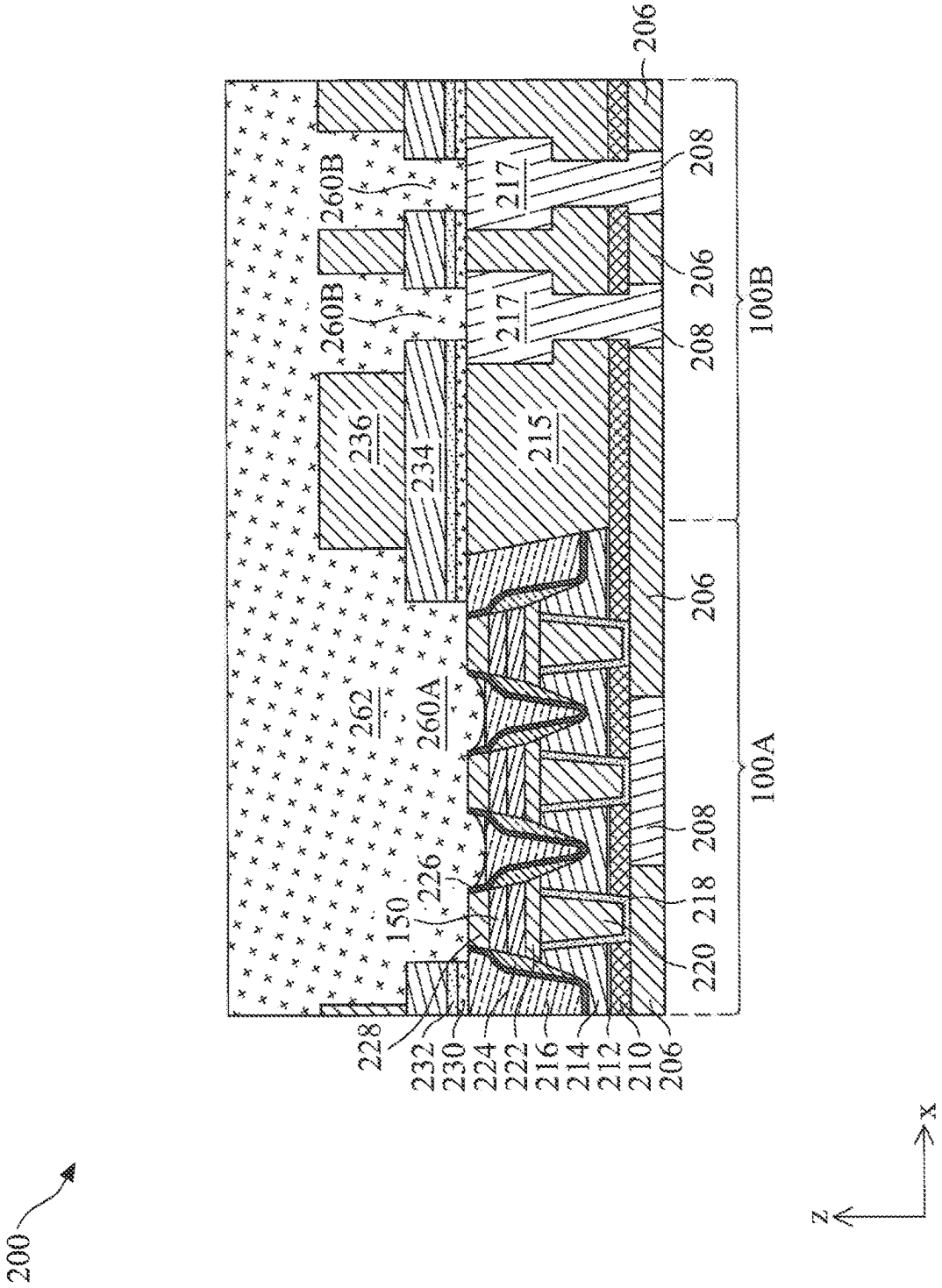
200
206
208
217
260B
236
234
215
262
260A
226
150
218
220
100A
100B
228
232
230
224
222
216
214
212
210
x
z

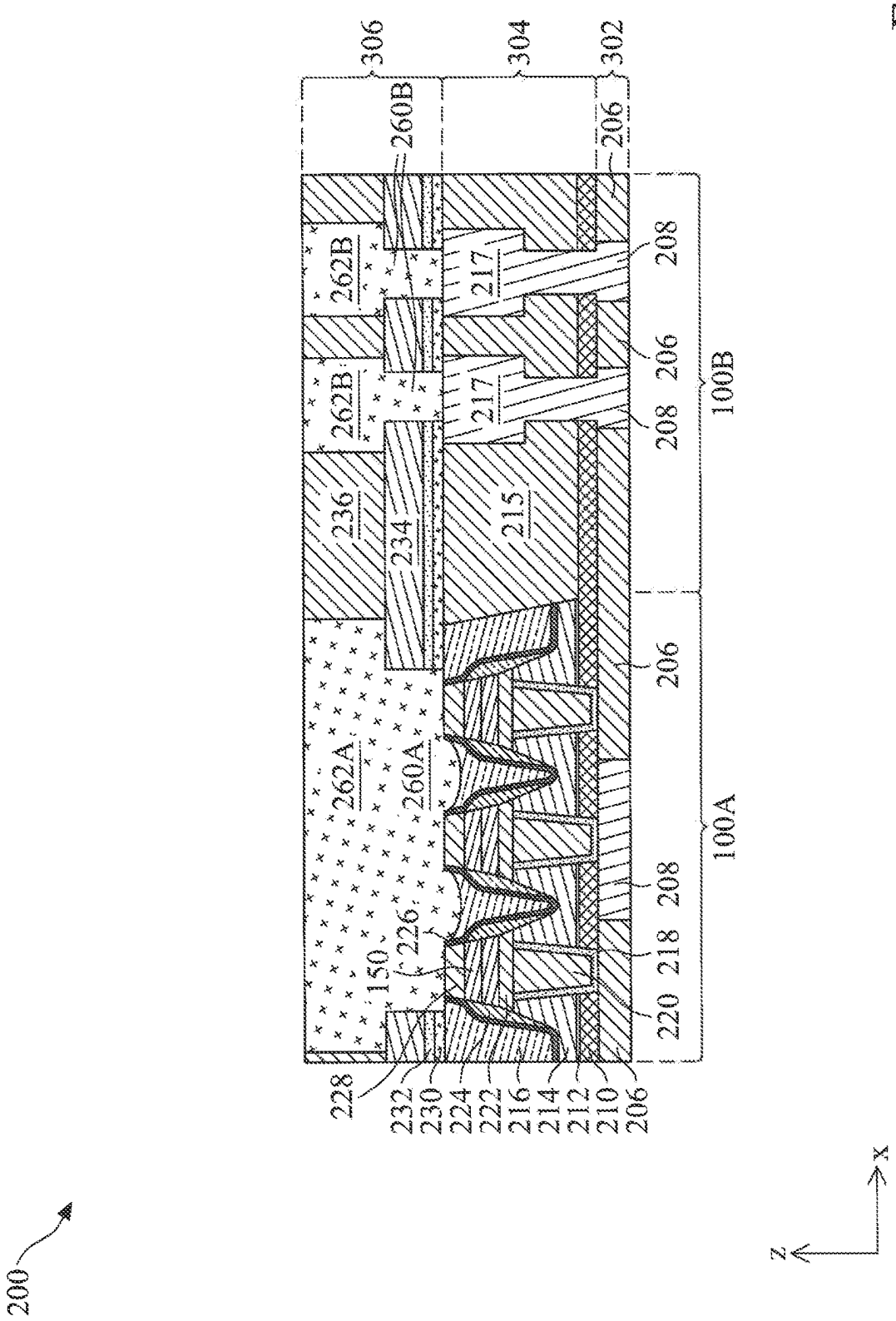
306
304
302
260B
206
262B
217
208
206
262B
217
208
100B
236
234
215
206
262A
260A
100A
208
226
150
218
220
228
232
230
224
222
216
214
212
210
206
200
x
z

FIG. 3Q

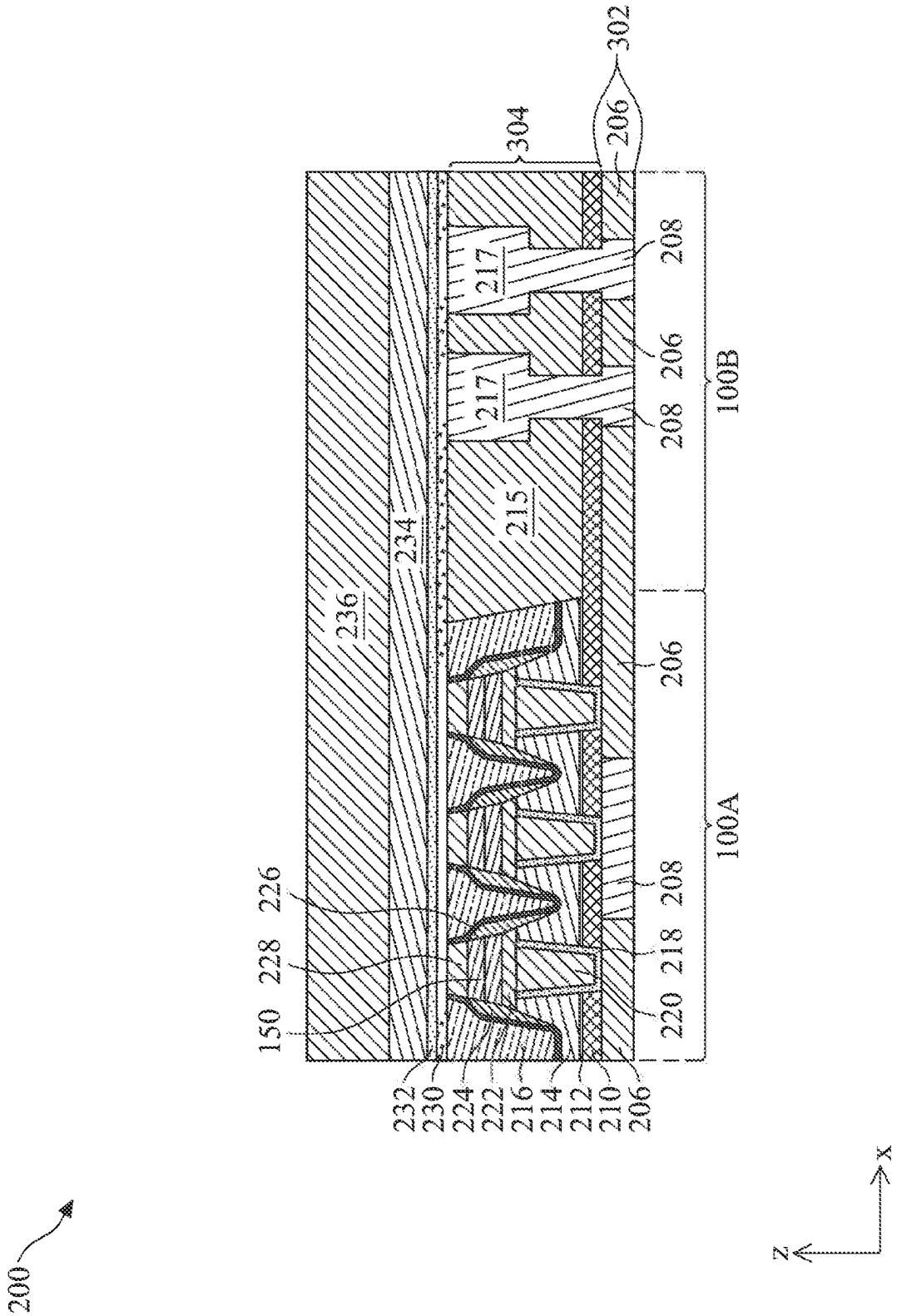
200
150
228
226
232
230
224
222
216
214
212
210
206
220
218
208
206
100A
215
234
236
217
217
208
206
208
100B
304
206
302
z
x

FIG. 4A

FIG. 4B

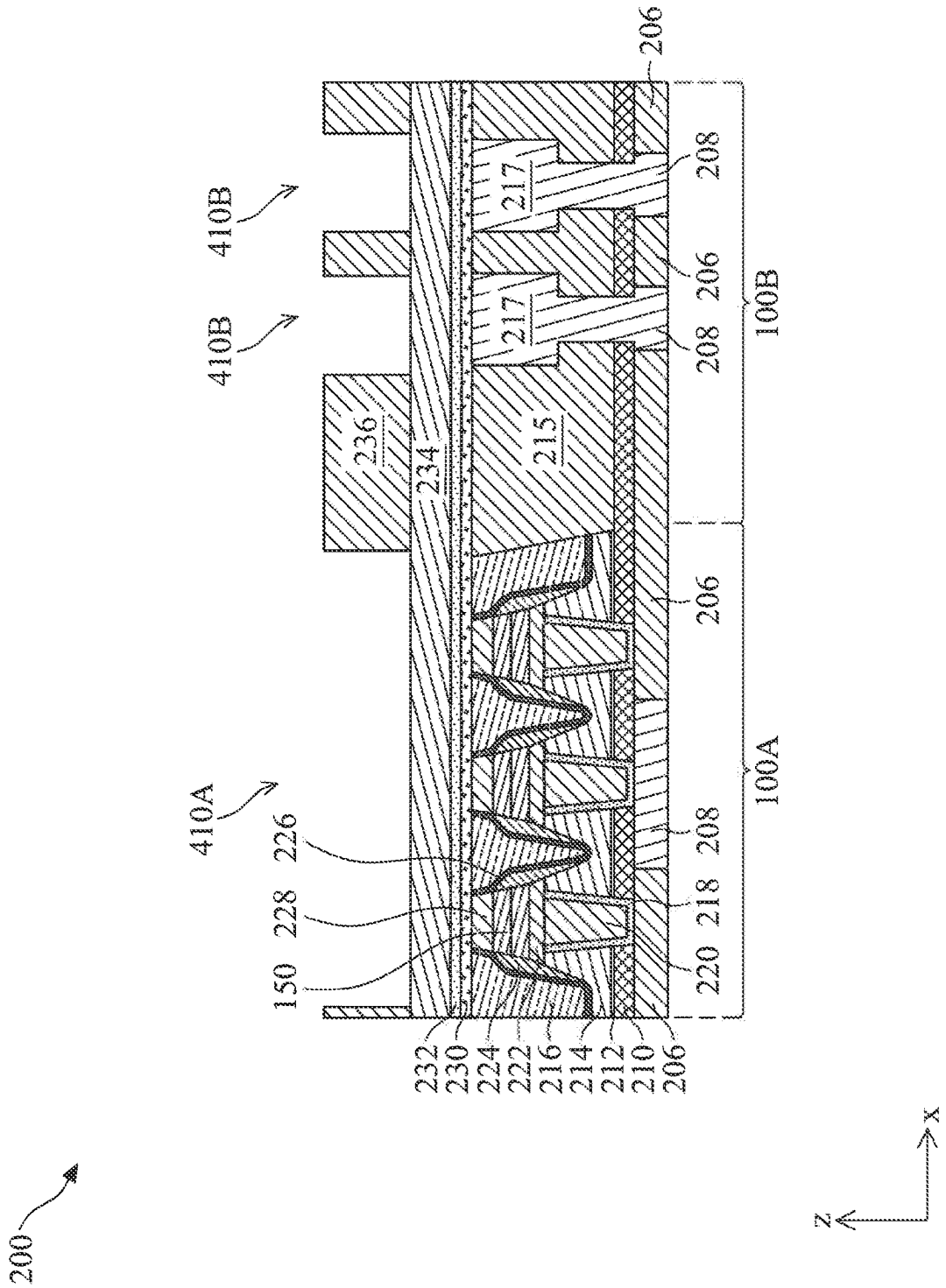
200
410A
410B
410B
150
228
226
232
230
224
222
216
214
212
210
206
220
218
208
206
100A
236
234
215
217
217
208
206
208
206
100B
z
x

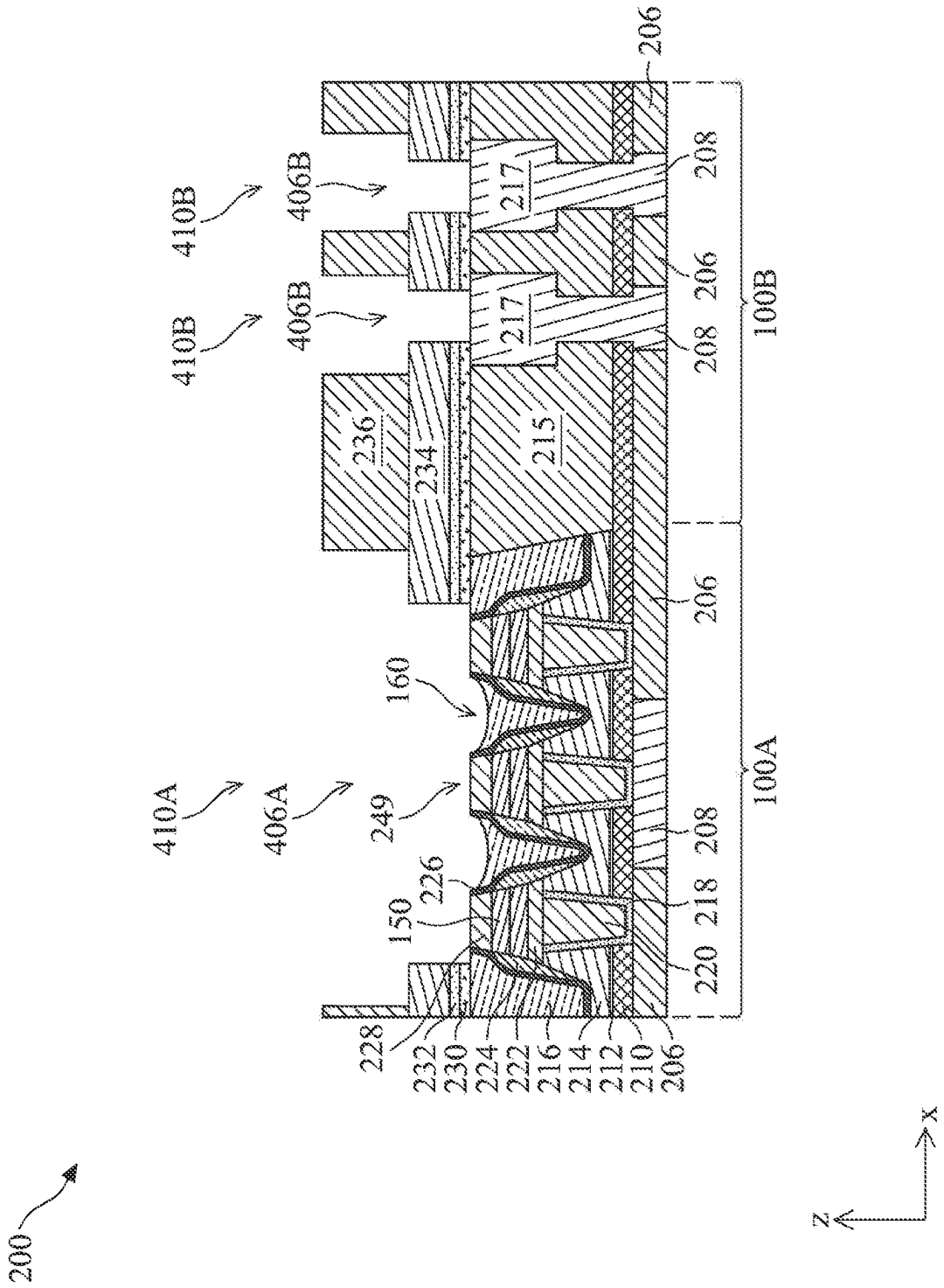
200
410A
406A
249
160
150
226
228
232
230
224
222
216
214
212
210
206
220
218
208
100A
410B
406B
236
234
215
217
206
208
100B
x
z

FIG. 4C

FIG. 4D

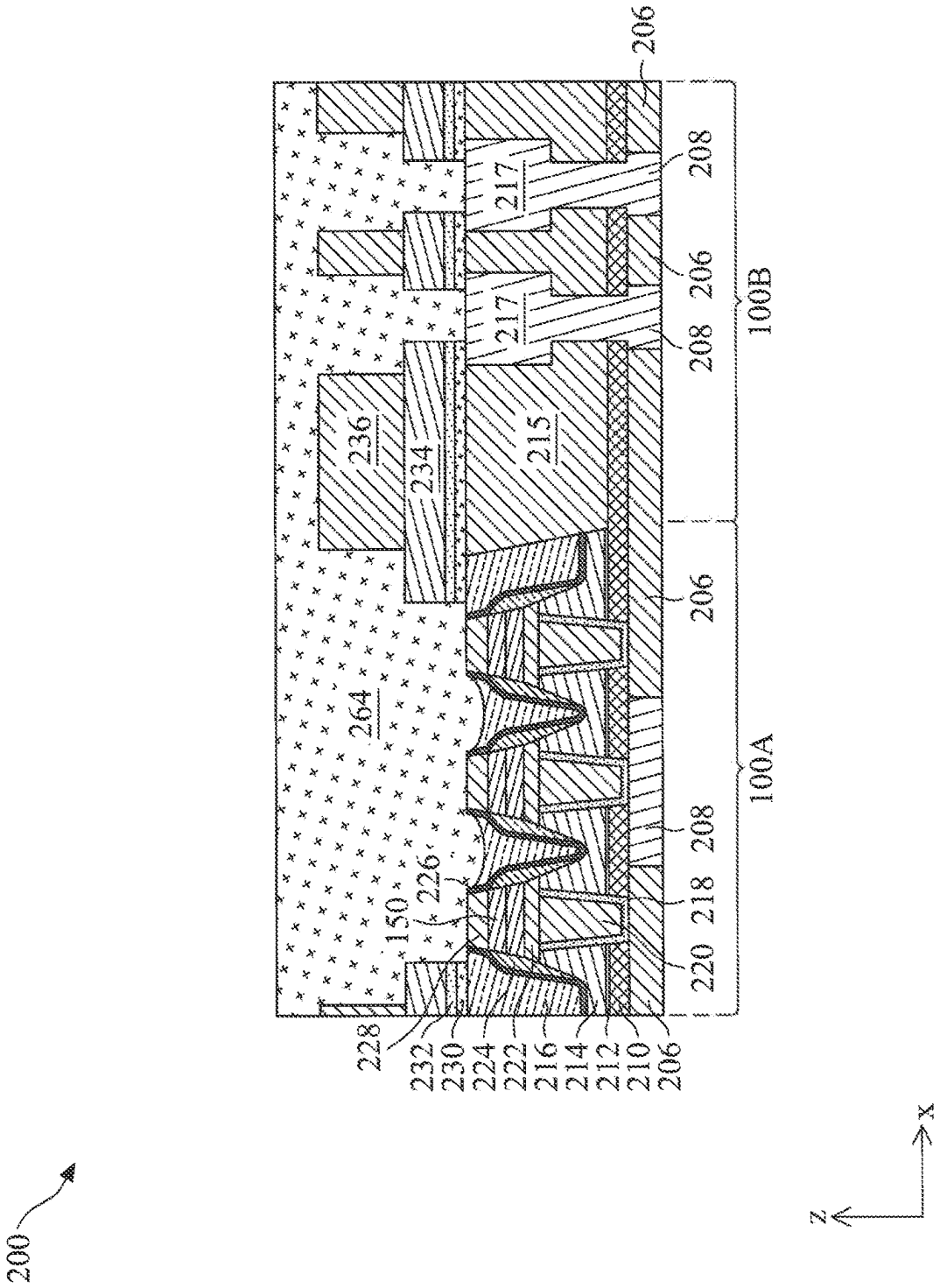
200
206
208
217
217
206
208
100B
236
234
215
206
264
100A
208
226
150
218
220
228
232
230
224
222
216
214
212
210
206
z
x

FIG. 4E

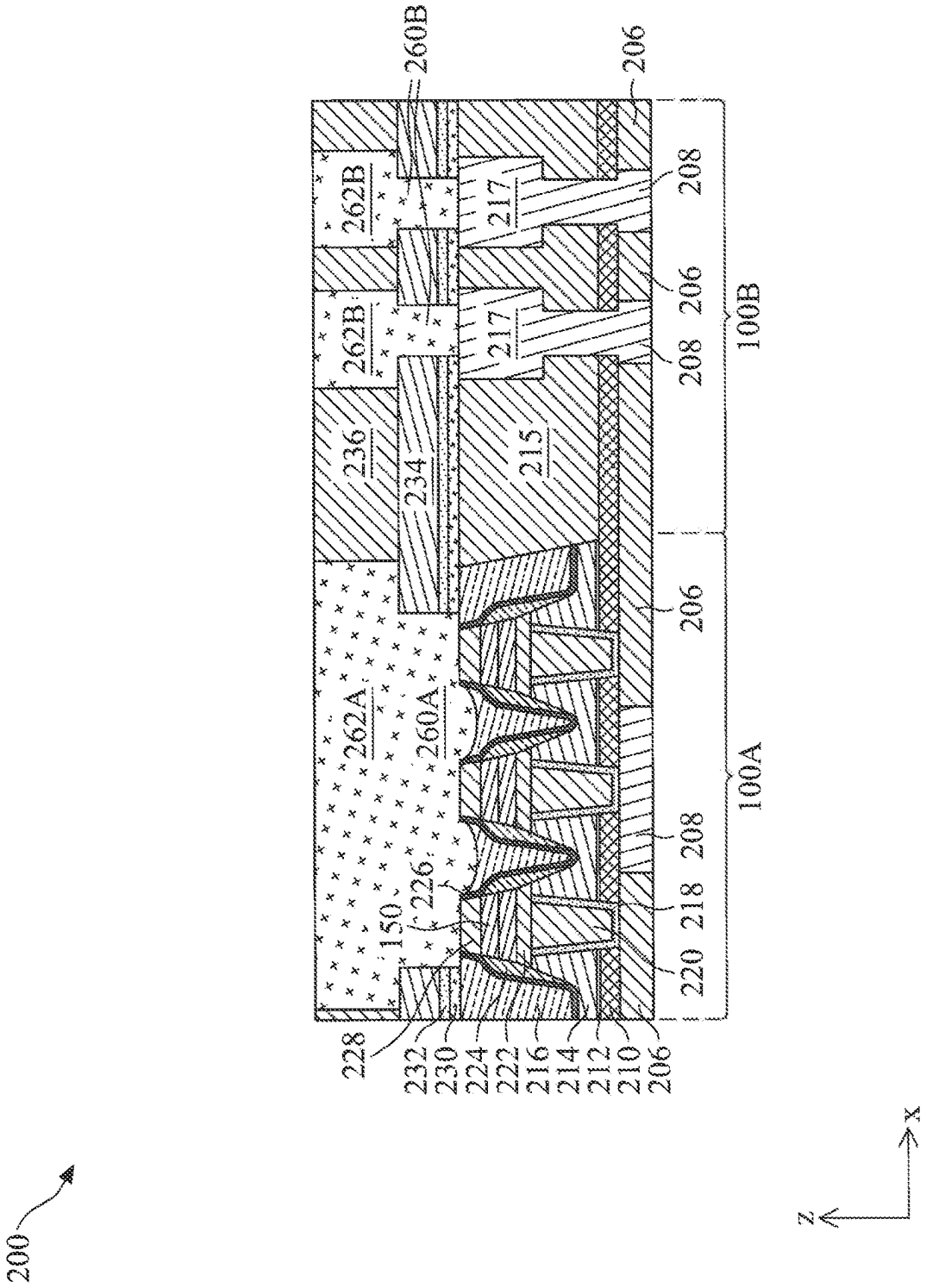
200
260B
206
262B
217
208
262B
217
206
208
100B
236
234
215
206
262A
260A
100A
208
226
150
218
220
228
232
230
224
222
216
214
212
210
206
x
z

FIG. 5A

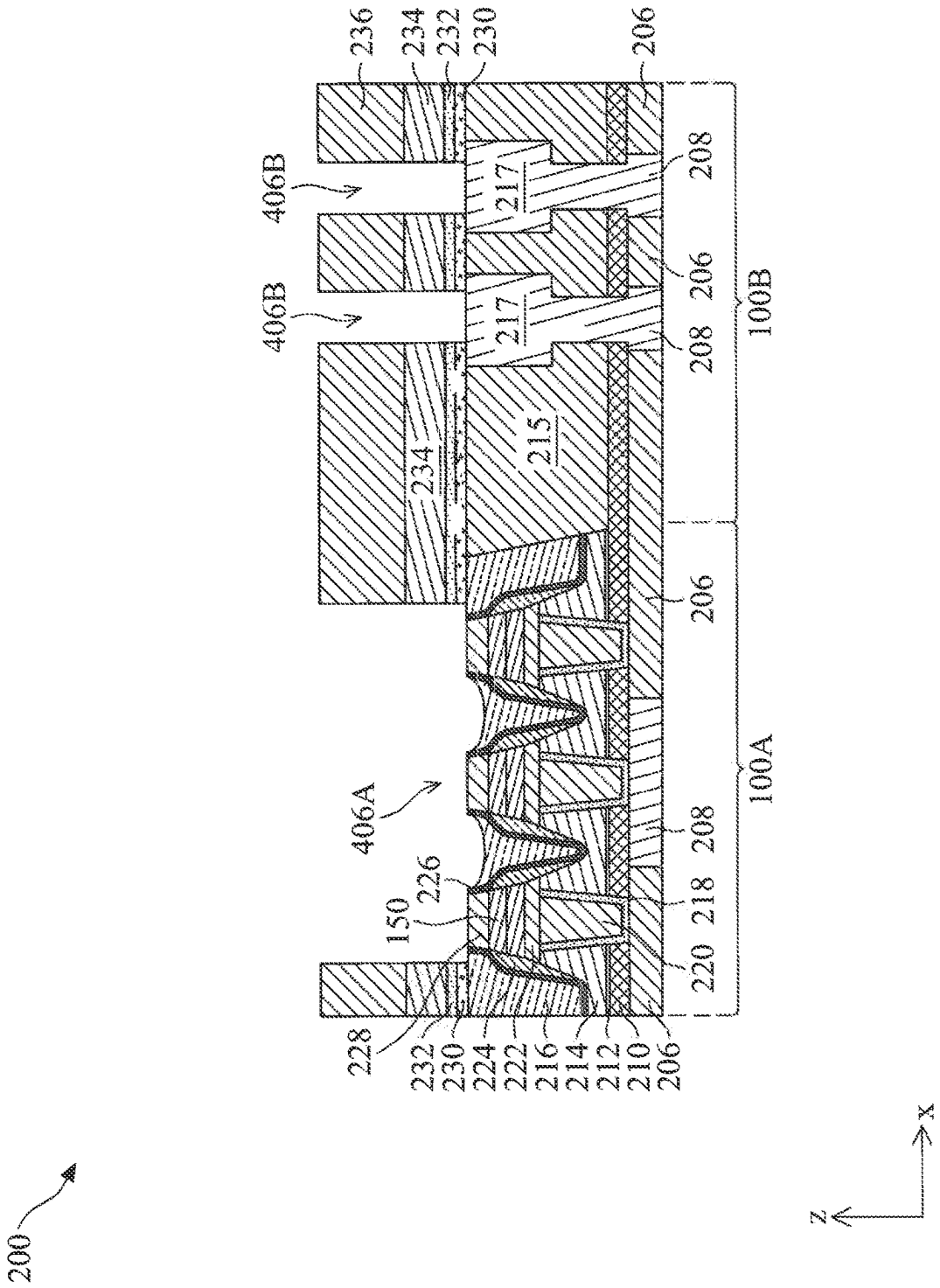
200
236
234
232
230
206
406B
406B
217
217
208
206
208
100B
234
215
206
406A
226
150
208
218
220
100A
228
232
230
224
222
216
214
212
210
206
x
z

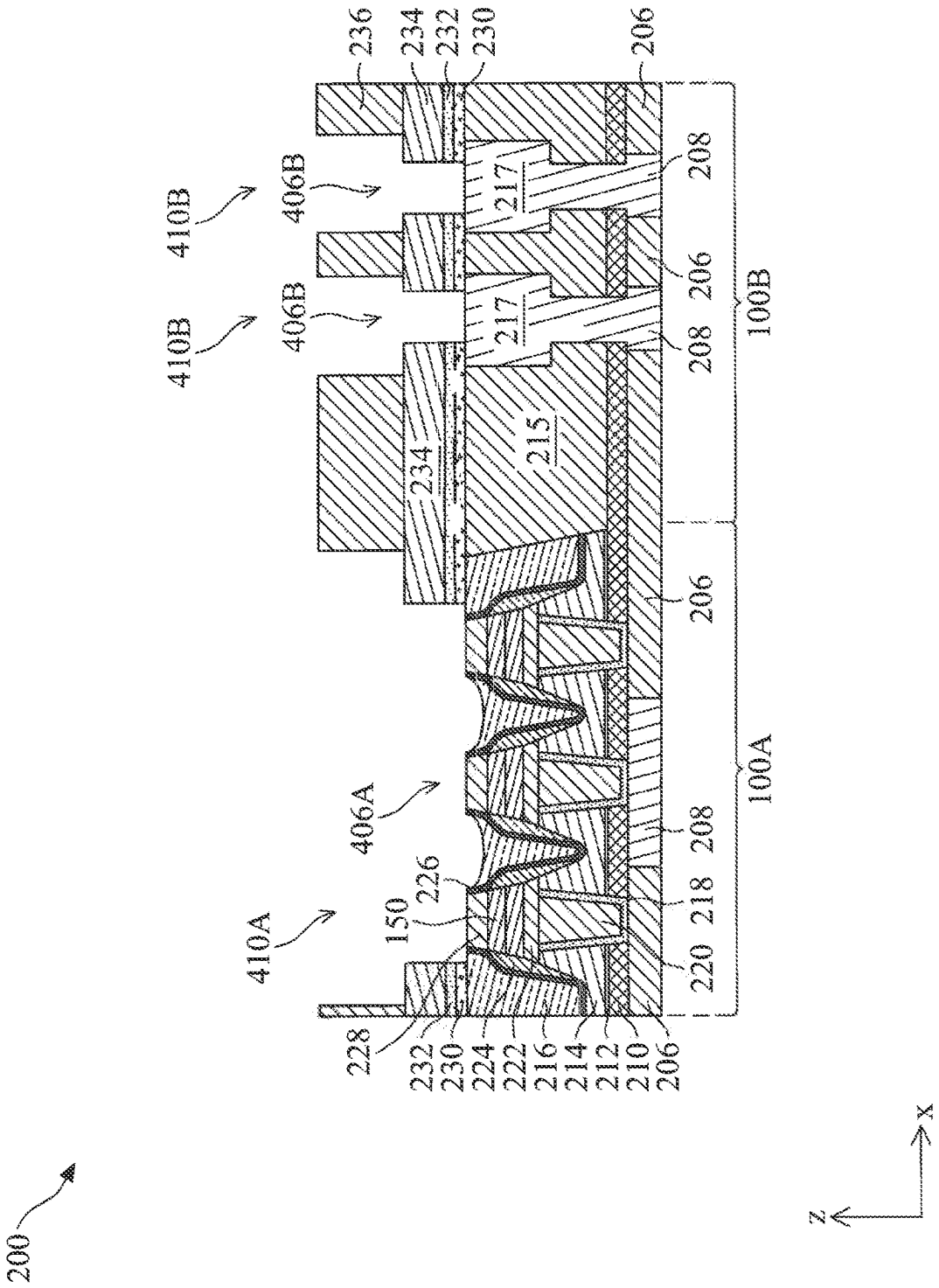
200
410A
410B
410B
406A
406B
406B
150
226
228
232
230
224
222
216
214
212
210
206
220
218
208
206
100A
215
217
217
234
208
206
208
100B
236
234
232
230
206
z
x

FIG. 5B

FIG. 6

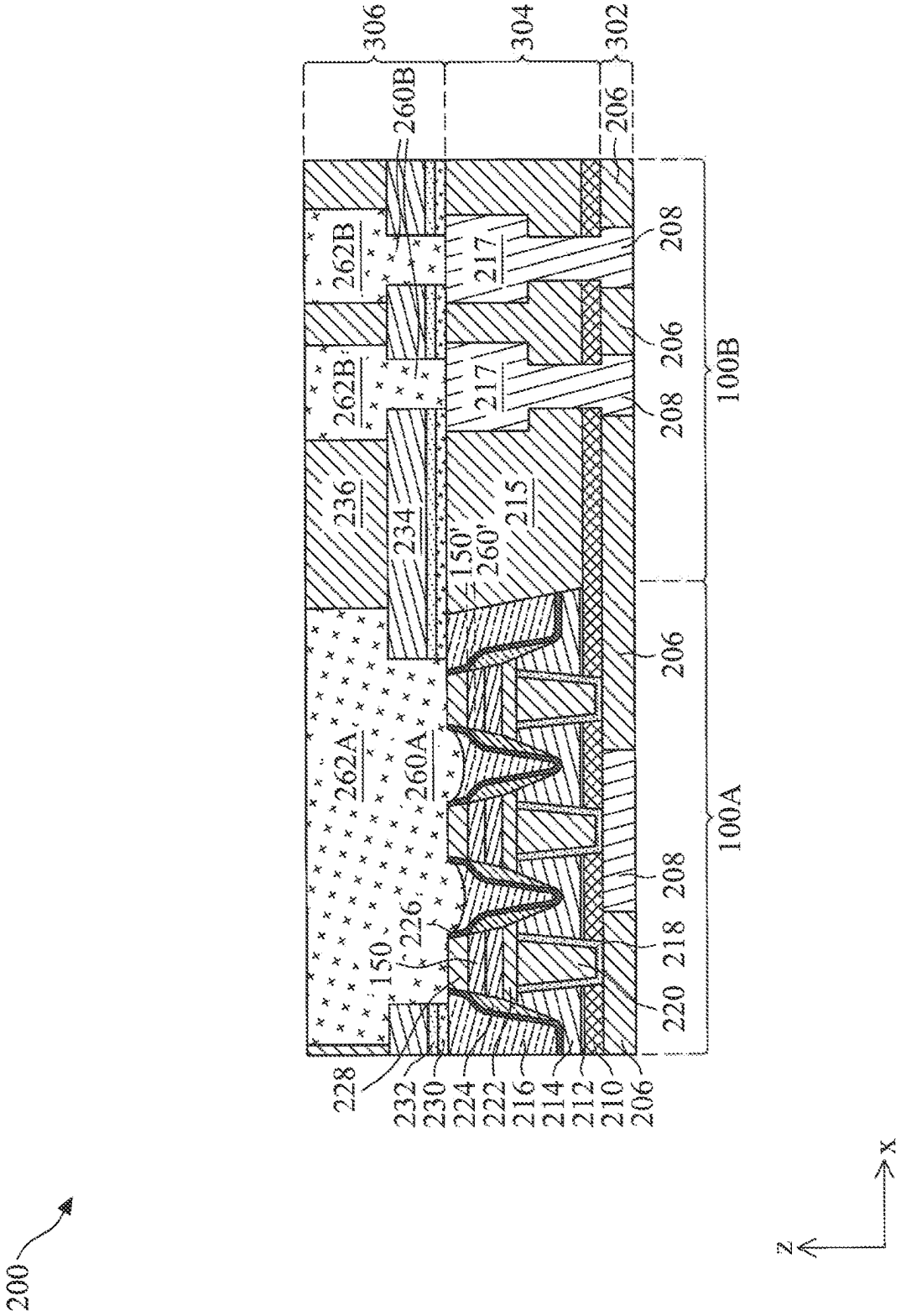
306
304
302
260B
206
262B
217
208
206
100B
262B
217
208
236
234
150'
260'
215
206
262A
260A
100A
208
226
150
218
220
228
232
230
224
222
216
214
212
210
206
200
x
z

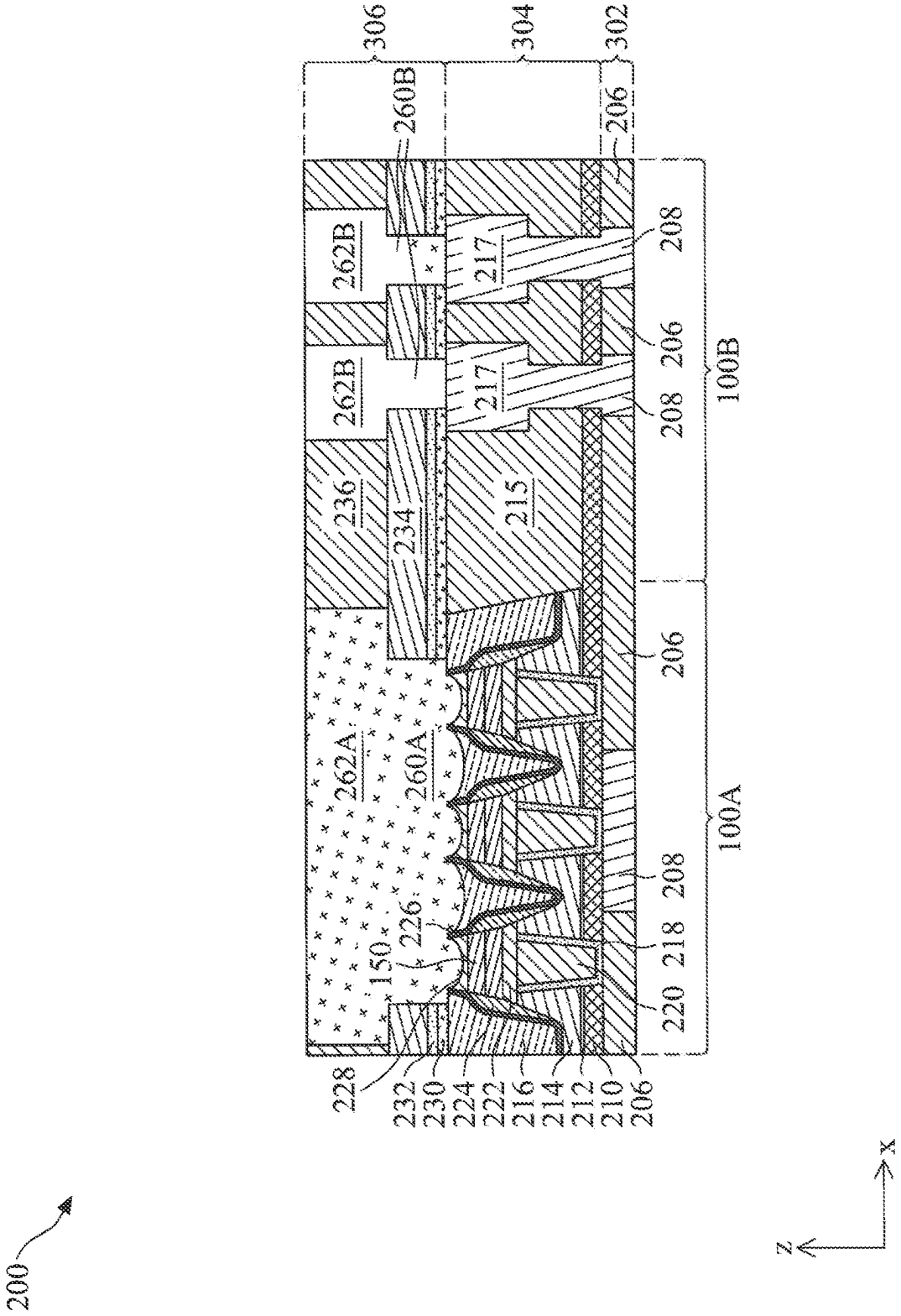
306
304
302
260B
206
262B
217
208
206
100B
262B
217
208
236
234
215
206
262A
260A
100A
208
226
218
150
220
228
232
230
224
222
216
214
212
210
206
200
z
x

FIG. 7

FIG. 8

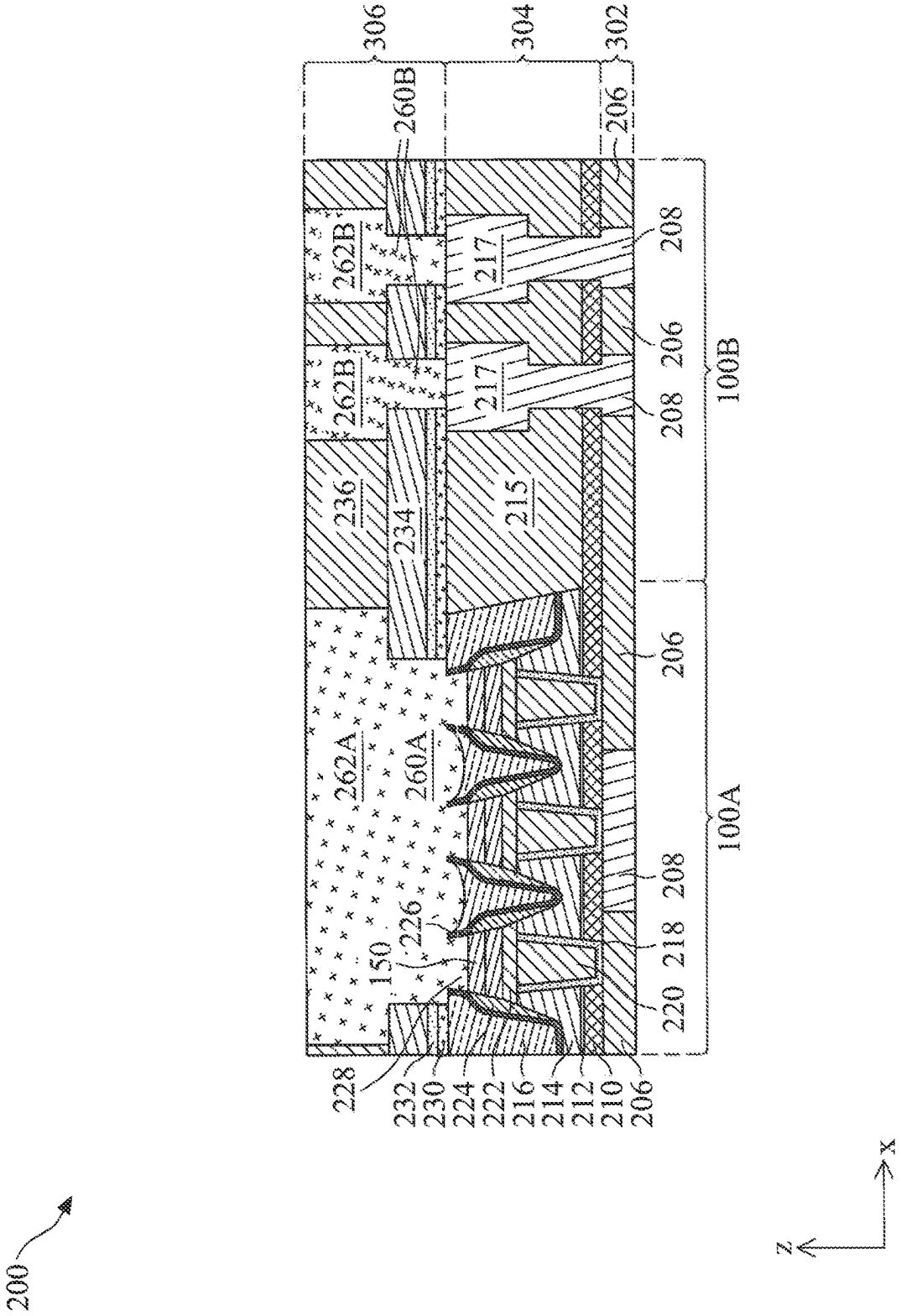
306
304
302
260B
206
262B
217
208
206
100B
262B
217
208
236
234
215
206
262A
260A
100A
208
226
218
150
220
228
232
230
224
222
216
214
212
210
206
200
x
z

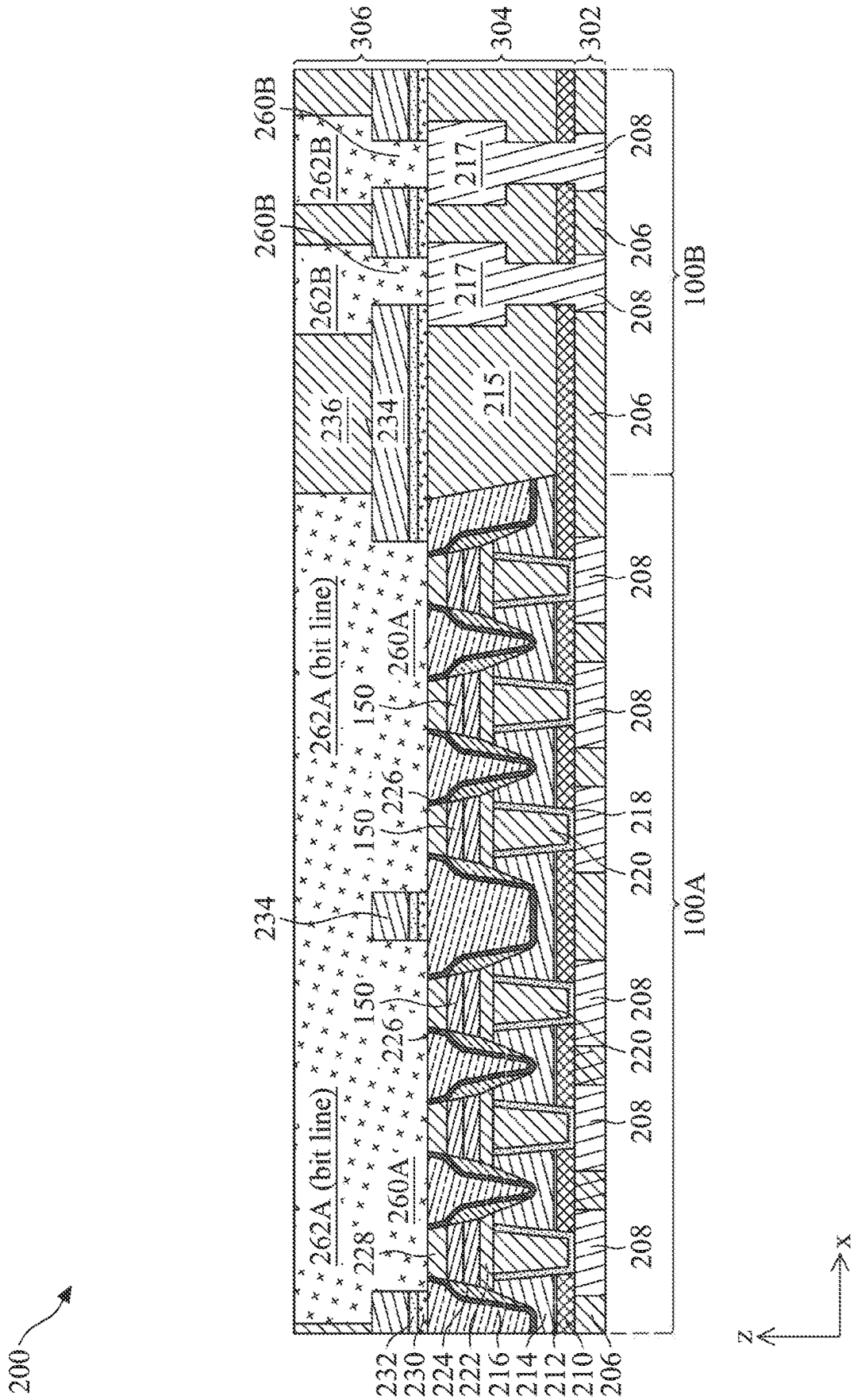
200
306
304
302
260B
262B
217
208
206
100B
236
234
215
262A (bit line)
260A
150
226
218
220
100A
228
232
230
224
222
216
214
212
210
z
x

FIG. 9

STRUCTURE AND METHOD FOR MRAM DEVICES WITH A SLOT VIA

PRIORITY

This application claims the priority to and the benefits of U.S. Provisional Application Ser. No. 63/063,783, filed Aug. 10, 2020, herein incorporated by reference in its entirety.

BACKGROUND

The semiconductor integrated circuit (IC) industry has experienced exponential growth. Technological advances in IC materials and design have produced generations of ICs where each generation has smaller and more complex circuits than the previous generation. In the course of IC evolution, functional density (i.e., the number of interconnected devices per chip area) has generally increased while geometry size (i.e., the smallest component (or line) that can be created using a fabrication process) has decreased. This scaling down process generally provides benefits by increasing production efficiency and lowering associated costs. Such scaling down has also increased the complexity of processing and manufacturing ICs.

One advancement in some IC design and fabrication has been the developing of non-volatile memory (NVM), and in particular to magnetic random-access memory (MRAM). MRAM offers comparable performance to volatile static random-access memory (SRAM) and comparable density with lower power consumption to volatile dynamic random access memory (DRAM). Compared to NVM Flash memory, MRAM may offer faster access times and suffer less degradation over time. An MRAM cell is formed by a magnetic tunneling junction (MTJ) comprising two ferromagnetic layers which are separated by a thin insulating barrier, and operates by tunneling of electrons between the two ferromagnetic layers through the insulating barrier. Scaling of MRAM cells in advanced technology nodes is limited by the resolution limit of both lithography and etching techniques. As the MRAM cells are scaled down, series resistance to the MRAM cells are increased in some cases, leading to higher power consumption. Although existing approaches in MRAM device formation have generally been adequate for their intended purposes, they have not been entirely satisfactory in all respects. Accordingly, there exists a need for improvements in this area.

BRIEF DESCRIPTION OF THE DRAWINGS

The present disclosure is best understood from the following detailed description when read with the accompanying figures. It is emphasized that, in accordance with the standard practice in the industry, various features are not drawn to scale and are used for illustration purposes only. In fact, the dimensions of the various features may be arbitrarily increased or reduced for clarity of discussion.

FIGS. **1**A and **1**B illustrate perspective views of a semiconductor device with an MRAM integrated therein. FIG. **1**C illustrates a cross-sectional view of the semiconductor device in FIGS. **1**A and **1**B, in accordance with an embodiment.

FIGS. **2**A and **2**B show a flow chart of a method for forming a semiconductor device with an MRAM array integrated therein, according to an embodiment of the present disclosure.

FIG. **2**C shows a flow chart of a method for forming a semiconductor device with an MRAM integrated therein, according to alternative embodiments of the present disclosure.

FIGS. **3**A, **3**B, **3**C, **3**D, **3**E, **3**F, **3**G, **3**H, **3**I, **3**J, **3**K, **3**K-**1**, **3**L, **3**M, **3**M-**1**, **3**N, **3**O, **3**P, and **3**Q illustrate cross-sectional views of a semiconductor structure during a fabrication process according to the method of FIGS. **2**A-**2**B, in accordance with some embodiments.

FIGS. **4**A, **4**B, **4**C, **4**D, **4**E, **5**A, and **5**B illustrate cross-sectional views of a semiconductor structure during fabrication processes according to the method of FIG. **2**C, in accordance with some embodiments.

FIGS. **6**, **7**, **8**, and **9** illustrate cross-sectional views of a semiconductor structure, in accordance with some embodiments.

DETAILED DESCRIPTION

The following disclosure provides many different embodiments, or examples, for implementing different features of the provided subject matter. Specific examples of components and arrangements are described below to simplify the present disclosure. These are, of course, merely examples and are not intended to be limiting. For example, the formation of a first feature over or on a second feature in the description that follows may include embodiments in which the first and second features are formed in direct contact, and may also include embodiments in which additional features may be formed between the first and second features, such that the first and second features may not be in direct contact. In addition, the present disclosure may repeat reference numerals and/or letters in the various examples. This repetition is for the purpose of simplicity and clarity and does not in itself dictate a relationship between the various embodiments and/or configurations discussed.

Further, spatially relative terms, such as "beneath," "below," "lower," "above," "upper" and the like, may be used herein for ease of description to describe one element or feature's relationship to another element(s) or feature(s) as illustrated in the figures. The spatially relative terms are intended to encompass different orientations of the device in use or operation in addition to the orientation depicted in the figures. The apparatus may be otherwise oriented (rotated 90 degrees or at other orientations) and the spatially relative descriptors used herein may likewise be interpreted accordingly. Still further, when a number or a range of numbers is described with "about," "approximate," and the like, the term encompasses numbers that are within certain variations (such as +/−10% or other variations) of the number described, in accordance with the knowledge of the skilled in the art in view of the specific technology disclosed herein, unless otherwise specified. For example, the term "about 5 nm" may encompass the dimension range from 4.5 nm to 5.5 nm, 4.0 nm to 5.0 nm, etc.

The present disclosure is generally related to semiconductor devices and fabrication methods. More particularly, the present disclosure is related to providing a semiconductor device with MRAM and logic device integrated therein. The MRAM is provided in an MRAM device region (or MRAM region) of the semiconductor device and the logic devices are provided in a logic device region (or logic region) of the semiconductor device. The MRAM includes an array of MRAM cells arranged into row and columns. The MRAM cells in the same row are connected to a common word line, and the MRAM cells in the same column are connected to a common bit line. Slot vias are

provided as part of the bit lines for reduced series resistance on the bit lines. The slot vias are fabricated by the same process that forms vias in a logic region to simplify the manufacturing processes.

FIGS. **1**A and **1**B illustrate perspective views of a device (or semiconductor device or structure) **200** having an MRAM array **250**. Particularly, FIG. **1**A illustrates a building block of the MRAM array **250**—a MRAM cell **249** having an MTJ **150** (or MTJ stack **150**). The MTJ **150** includes an upper ferromagnetic plate **152** and a lower ferromagnetic plate **154**, which are separated by a thin insulating layer **156**, also referred to as a tunnel barrier layer. One of the two ferromagnetic plates (e.g., the lower ferromagnetic plate **154**) is a magnetic layer that is pinned to an antiferromagnetic layer (also referred to as a fixed or pinned layer **154**), while the other ferromagnetic plate (e.g., the upper ferromagnetic plate **152**) is a "free" magnetic layer that can have its magnetic field changed to one of two or more values to store one of two or more corresponding data states (also referred to as a free layer **152**).

The MTJ **150** uses tunnel magnetoresistance (TMR) to store magnetic fields on the upper and lower ferromagnetic plates **152** and **154**. For a sufficiently thin insulating layer **156** (e.g., about 10 nm or less thick), electrons can tunnel from the upper ferromagnetic plate **152** to the lower ferromagnetic plate **154**. Data may be written to the cell in many ways. In one method, current is passed between the upper and lower ferromagnetic plates **152** and **154**, which induces a magnetic field stored in the free magnetic layer (e.g., the upper ferromagnetic plate **152**). In another method, spin-transfer-torque (STT) is utilized, wherein a spin-aligned or polarized electron flow is used to change the magnetic field within the free magnetic layer with respect to the pinned magnetic layer. Other methods to write data may be used. However, all data write methods include changing the magnetic field within the free magnetic layer with respect to the pinned magnetic layer.

The electrical resistance of the MTJ **150** changes in accordance with the magnetic fields stored in the upper and lower ferromagnetic plates **152** and **154**, due to the magnetic tunnel effect. For example, when the magnetic fields of the upper and lower ferromagnetic plates **152** and **154** are aligned (or in the same direction), the MTJ **150** is in a low-resistance state (i.e., a logical "0" state). When the magnetic fields of the upper and lower ferromagnetic plates **152** and **154** are in opposite directions, the MTJ **150** is in a high-resistance state (i.e., a logical "1" state). The direction of the magnetic field of the upper ferromagnetic plate **152** can be changed by passing a current through the MTJ **150**. By measuring the electrical resistance between the upper and lower ferromagnetic plates **152** and **154**, a read circuitry coupled to the MTJ **150** can discern between the "0" and "1" states. FIG. **1**A further shows that the upper ferromagnetic plate **152** of an MTJ **150** is coupled to a bit line, the lower ferromagnetic plate **154** of an MTJ **150** is coupled to a source (or drain) of a transistor in a transistor structure **101**, the drain (or source) of the transistor is coupled to a supply line (SL), and the gate of the transistor is coupled to a word line (WL). The MTJ **150** can be accessed (such as read or written) through the bit line, word line, and the supply line.

FIG. **1**B illustrates an MRAM array **250**, which includes M rows (words) and N columns (bits) of MRAM cells (or MRAM devices) **249**. Each MRAM cell **249** comprises an MTJ **150**. Word lines WL_1, WL_2, . . . WL_M extend across respective rows of MRAM cells **249** and bit lines BL_1, BL_2, . . . BL_N extend along columns of MRAM cells **249**.

FIG. **1**C shows a cross-sectional view of the device **200** along the bit line direction of the MRAM array **250** (i.e., the B-B line in FIG. **1**B), showing both the MRAM array **250** and logic devices **252** in the same figure, in accordance with some embodiments of the present disclosure. Referring to FIG. **1**C, the MRAM array **250** is provided in a MRAM region **100**A, while the logic devices **252** are provided in a logic region **100**B. The logic devices **252** may be used for implementing write/read logic for accessing the MRAM array **250** or perform other functions. The MRAM region **100**A and the logic region **100**B have a common transistor structure **101** in or on a semiconductor substrate **100**.

In some embodiments, the semiconductor substrate **100** may be but is not limited to, a silicon substrate (such as a silicon wafer). Alternatively, the semiconductor substrate **100** includes another elementary semiconductor, such as germanium; a compound semiconductor including silicon carbide, gallium arsenic, gallium phosphide, indium phosphide, indium arsenide, and/or indium antimonide; an alloy semiconductor including SiGe, GaAsP, AlInAs, AlGaAs, GaInAs, GaInP, and/or GaInAsP; or combinations thereof. In yet another alternative, the semiconductor substrate **100** is a semiconductor on insulator (SOI). In other alternatives, semiconductor substrate **100** may include a doped epitaxial layer, a gradient semiconductor layer, and/or a semiconductor layer overlying another semiconductor layer of a different type, such as a silicon layer on a silicon germanium layer. The semiconductor substrate **100** may or may not include doped regions, such as a p-well, an n-well, or combinations thereof.

The semiconductor substrate **100** further includes heavily doped regions such as sources **103** and drains **105** at least partially in the semiconductor substrate **100**. A gate **107** is positioned over a top surface of the semiconductor substrate **100** and between the source **103** and the drain **105**. Contact plugs **108** are formed in inter-layer dielectric (ILD) **109** and may be electrically coupled to the transistor structure **101**. In some embodiments, the ILD **109** is formed on the semiconductor substrate **100**. The ILD **109** may be formed by a variety of techniques for forming such layers, e.g., chemical vapor deposition (CVD), low-pressure CVD (LPCVD), plasma-enhanced CVD (PECVD), sputtering and physical vapor deposition (PVD), thermal growing, and the like. The ILD **109** may be formed from a variety of dielectric materials such as an oxide (e.g., Ge oxide), an oxynitride (e.g., GaP oxynitride), silicon dioxide (SiO_2), a nitrogen-bearing oxide (e.g., nitrogen-bearing SiO_2), a nitrogen-doped oxide (e.g., N_2-implanted SiO_2), silicon oxynitride ($Si_xO_yN_z$), and the like. The transistors in the transistor structure **101** can be planar transistors or non-planar transistor, such as FinFET.

In some embodiments, a shallow trench isolation (STI) **111** is provided to define and electrically isolate adjacent transistors. A number of STI **111** are formed in the semiconductor substrate **100**. The STI **111** may, for example, include an oxide (e.g., Ge oxide), an oxynitride (e.g., GaP oxynitride), silicon dioxide (SiO_2), a nitrogen-bearing oxide (e.g., nitrogen-bearing SiO_2), a nitrogen-doped oxide (e.g., N_2-implanted SiO_2), silicon oxynitride ($Si_xO_yN_z$), and the like. The STI **111** may also be formed of any suitable "high dielectric constant" or "high K" material, where K is greater than or equal to about 8, such as titanium oxide (Ti_xO_y, e.g., TiO_2), tantalum oxide (Ta_xO_y, e.g., Ta_2O_5), and the like. Alternatively, the STI **111** may also be formed of any suitable "low dielectric constant" or "low-k" dielectric material, where k is less than or equal to about 4.

FIG. **1**C further illustrates that the device **200** includes an interconnect structure **308** over the transistor structure **101**.

The interconnect structure **308** includes three adjacent metal layers **302**, **304**, and **306** and other metal layers not shown. The metal layer **302** is the Nth metal layer above the top surface the transistor structure **101**, while the metal layers **304** and **306** are the $(N+1)^{th}$ metal layer and the $(N+2)^{th}$ metal layer, respectively. Thus, the metal layers **302**, **304**, and **306** are also referred to metal layers MN, M_{N+1}, and M_{N+2} in some embodiments. The number N can be any natural number. For example, N may be 3, 4, 5, 6, or another natural number. In the present embodiment, the MRAM cells **249** are implemented in the metal layer **304**.

The metal layer **302** includes an inter-metal dielectric (IMD) layer **206** and metal lines **208** in both the MRAM region **100**A and the logic region **100**B. The IMD layer **206** can be an oxide, such as silicon dioxide, a low-k dielectric material such as carbon doped oxides, or an extreme low-k dielectric material such as porous carbon doped silicon dioxide. The metal lines **208** can be made of a metal, such as aluminum, copper, or combinations thereof.

The metal layer **304** includes a dielectric layer **210** (also referred to as a dielectric barrier layer (SBL)) that extends through both the MRAM region **100**A and the logic region **100**B. For example, the dielectric layer **210** may include one or more dielectric materials such as Si_3N_4, SiON, SiC, SiCN, or a combination thereof in various embodiments. In the MRAM region **100**A, the metal layer **304** further includes the MRAM cells **249** surrounded by one or more dielectric layers **210**, **212**, **214**, **216**, and **226**. In the logic region **100**B, the metal layer **304** further includes metal vias **213** and metal lines **217** surrounded by one or more dielectric layers **210** and **215**. The various components in the metal layer **304** are further described below.

In an embodiment, the dielectric layer **212** includes a metal-based dielectric material, such as aluminum oxide (i.e., AlO_x such as Al_2O_3). In an embodiment, the dielectric layer **214** includes a low-k dielectric material, such as a silicon oxide based low-k dielectric material. For example, the dielectric layer **214** may include un-doped silicate glass (USG), or doped silicon oxide such as borophosphosilicate glass (BPSG), fused silica glass (FSG), phosphosilicate glass (PSG), boron doped silicon glass (BSG), and/or other suitable dielectric materials. In an embodiment, the dielectric layer **216** includes one or more oxide based dielectric materials such as silicon dioxide, tetraethylorthosilicate (TEOS) formed oxide, un-doped silicate glass, or doped silicon oxide such as borophosphosilicate glass (BPSG), fused silica glass (FSG), phosphosilicate glass (PSG), boron doped silicon glass (BSG), and/or other suitable dielectric materials. In an embodiment, the dielectric layer **226** includes a dielectric material that is different from the materials in the dielectric layer **216** and the materials in a top electrode **228** (discussed below). For example, the dielectric layer **226** may include a metal-based dielectric material, such as aluminum oxide (i.e., AlO_x such as Al_2O_3).

In the present embodiment, each MRAM cell **249** includes a bottom electrode via (BEVA) **220** and a conductive barrier layer **218** on sidewalls and a bottom surface of the BEVA **220**. The conductive barrier layer **218** may be disposed directly on one of the metal lines **208** in the metal layer **302**, which is connected to a via on one of the source and drain features of the transistors in the transistor structure **101** (such connection is not shown in FIG. **1**C, but see FIG. **1**A). The BEVA **220** may include tungsten, titanium, tantalum, tungsten nitride, titanium nitride, tantalum nitride, a combination thereof, or other suitable metal or metal compound. The barrier layer **218** may include titanium nitride, tantalum nitride, or other suitable conductive diffusion barrier. The barrier layer **218** is disposed between the BEVA **220** and the surrounding dielectric layers **210**, **221**, and **214**.

In the present embodiment, each MRAM cell **249** further includes a bottom electrode (BE) **222** disposed on the BEVA **220**, an MTJ (or MTJ stack) **150** disposed on the BE **222**, and a top electrode (TE) **228** disposed on the MTJ **150**. In an embodiment, each of the BE **222** and the TE **228** may include a metal nitride such as TaN, TiN, Ti/TiN, TaN/TiN, Ta or the combinations thereof. In some embodiments, the MTJ **150** may include ferromagnetic layers, MTJ spacers, and a capping layer. The capping layer is formed on the ferromagnetic layer. Each of the ferromagnetic layers may include ferromagnetic material, which may be metal or metal alloy, for example, Fe, Co, Ni, CoFeB, FeB, CoFe, FePt, FePd, CoPt, CoPd, CoNi, TbFeCo, CrNi or the like. The MTJ spacer may include non-ferromagnetic metal, for example, Ag, Au, Cu, Ta, W, Mn, Pt, Pd, V, Cr, Nb, Mo, Tc, Ru or the like. Another MTJ spacer may also include insulator, for example, Al_2O_3, MgO, TaO, RuO or the like. The capping layer may include non-ferromagnetic material, which may be a metal or an insulator, for example, Ag, Au, Cu, Ta, W, Mn, Pt, Pd, V, Cr, Nb, Mo, Tc, Ru, Ir, Re, Os, Al_2O_3, MgO, TaO, RuO or the like. The capping layer may reduce write current of its associated MRAM cell. The ferromagnetic layer may function as a free layer **152** (FIG. **1**A) whose magnetic polarity or magnetic orientation can be changed during write operation of its associated MRAM cell **249**. The ferromagnetic layers and the MTJ spacer may function as a fixed or pinned layer **154** (FIG. **1**A) whose magnetic orientation may not be changed during operation of its associated MRAM cell **249**. It is contemplated that the MTJ **150** may include an antiferromagnetic layer in accordance with other embodiments.

In the present embodiment, each MRAM cell **249** further includes dielectric spacers **224** on sidewalls of the MTJ **150** and the BE **222**. The spacers **224** may include one or more dielectric materials such as silicon oxide (SiO_x), silicon nitride (SiN_x), silicon oxynitride ($Si_xO_yN_z$), or the like. The dielectric layer **226** is disposed over the spacers **224** and over the sidewalls of the TE **228** in the present embodiment.

In the present embodiment, the metal layer **304** in the logic region **100**B includes the metal vias **213**, the metal lines **217**, and the dielectric layers **210** and **215**. The metal vias **213** are electrically connected to some of the metal lines **208** in the metal layer **302**. The dielectric layer **215** can be an oxide, such as silicon dioxide, a low-k dielectric material such as carbon doped oxides, or an extreme low-k dielectric material such as porous carbon doped silicon dioxide. The metal vias **213** and the metal lines **217** can be made of a metal, such as aluminum, copper, or combinations thereof.

The metal layer **306** includes metallic features **260**A, **260**B, **262**A, and **262**B surrounded by one or more dielectric layers **230**, **232**, **234**, and **236**. The dielectric layers **230**, **232**, **234**, and **236** extend across both the MRAM region **100**A and the logic region **100**B. The metallic features **260**A and **262**A are disposed in the MRAM region **100**A. The metallic features **260**B and **262**B are disposed in the logic region **100**B. The various components in the metal layer **306** are further described below.

In an embodiment, the dielectric layer **230** includes a material that is the same as or similar to the material(s) in the dielectric layer **210**. For example, the dielectric layer **230** may include one or more dielectric materials such as Si_3N_4, SiON, SiC, SiCN, or a combination thereof. In an embodiment, the dielectric layer **232** includes a material that is the same as or similar to the material(s) in the dielectric layer **212**. For example, the dielectric layer **232** may include a

metal-based dielectric material, such as aluminum oxide (i.e., AlO_x such as Al_2O_3) or other metal oxides. In an embodiment, the dielectric layer **234** includes a low-k dielectric material, such as a silicon oxide based low-k dielectric material. For example, the dielectric layer **234** may include un-doped silicate glass (USG), or doped silicon oxide such as borophosphosilicate glass (BPSG), fused silica glass (FSG), phosphosilicate glass (PSG), boron doped silicon glass (BSG), and/or other suitable dielectric materials. In an embodiment, the dielectric layer **236** includes one or more oxide based dielectric materials such as silicon dioxide, tetraethylorthosilicate (TEOS) formed oxide, un-doped silicate glass, or doped silicon oxide such as borophosphosilicate glass (BPSG), fused silica glass (FSG), phosphosilicate glass (PSG), boron doped silicon glass (BSG), and/or other suitable dielectric materials.

In the present embodiment, the metallic features **260**B and **262**B are metal vias and metal lines respectively. The metal vias **260**B and the metal lines **262**B can be made of a metal, such as aluminum, copper, or combinations thereof. In the present embodiment, the metallic feature **260**A is a slot via which is formed in the same process that forms the vias **260**B and includes the same material as the vias **260**B, and the metallic feature **262**A is a metal line which is formed in the same process that forms the metal lines **262**B and includes the same material as the metal lines **262**B. The slot via **260**A and the metal line **262**A are part of a bit line for the MRAM array **250**. The slot via **260**A is disposed over a column of MRAM cells **249** that share the same bit line (see FIG. **1**B). In some embodiments, the slot via **260**A is disposed over a plurality of contiguous MRAM cells **249** (which may be a subset of a column of MRAM cells **249**) that share the same bit line. The below discussion applies to both scenarios (a column or a subset of a column) when referring to a column of MRAM cells **249**. In the present embodiment, the slot via **260**A is disposed directly on and electrically connected to the TE **228** of each MRAM cells **249** in a column. In some embodiments, the slot via **260**A is disposed directly on and electrically connected to the MTJ **150** of each MRAM cells **249** in a column. The slot via **260**A extends continuously and laterally (along the "x" direction or bit line direction) from the first one of the MRAM cell **249** to the last one of the MRAM cell **249** in a column. Compared with approaches where an individual via is disposed over each MRAM cell **249**, having the slot via **260**A contacting a column of MRAM cells **249** advantageously reduces the series resistance of the bit line.

Further, as shown in FIG. **1**C, portions of the slot via **260**A that are disposed between adjacent MTJs **150** extend below the top surface of the TE **228**, and in some embodiment, even below the top surface of the MTJ **150** (as will be discussed later). This advantageously increases the volume of the slot via and further reduces the series resistance of the bit line. In the present embodiment, the vias **260**B have a thickness d1, portions of the slot via **260**A that are directly above the MTJ **150** have a thickness d2, and portions of the slot via **260**A that are laterally between two adjacent MTJs **150** have a thickness d3. In an embodiment, the thickness d2 is equal to or greater than the thickness d1, and the thickness d3 is greater than the thickness d1. In some embodiments, the thickness d3 is equal to or greater than the thickness d2. For example, the thickness d3 is greater than the thickness d2 by about 5 nm to about 50 nm in some embodiments. In some examples, the thickness d2 is in a range of 40 nm to 80 nm, and the thickness d3 is in a range of 45 nm to 130 nm. The above thicknesses d1, d2, and d3 are measured from the bottom surface of the respective vias **260**A and **260**B to the top surface of the dielectric layer **234**. Further, in some embodiments, the length of the slot via (i.e., along the "x" direction) is in a range of about 100 nm to about 10,000 nm, while the width of the slot via (i.e., along the "y" direction into and out of the page of FIG. **1**C) is in a range of about 20 nm to about 100 nm. In embodiments, the metal lines **262**A and **262**B have about the same thickness.

FIGS. **2**A and **2**B illustrate a flow chart of a method **500** for forming the semiconductor device **200** having an MRAM array and logic devices integrated in accordance with an embodiment. FIG. **2**C illustrates a flow chart of certain operation of the method **500** in an alternative embodiment. The method **500** is merely an example, not intended to limit the present disclosure beyond what is explicitly recited in the claims. Additional operations can be provided before, during, and after the method **500**, and some operations described can be replaced, eliminated, or relocated for additional embodiments of the method. The method **500** is described below in conjunction with FIGS. **3**A-**8**, which illustrate various cross-sectional views of the semiconductor device **200** during fabrication steps according to the method **500**.

At operation **502**, the method **500** (FIG. **2**A) provides, or is provided with, a device **200** having a metal layer **302** and various dielectric layers **210**, **212**, and **214** disposed over the metal layer **302**, such as shown in FIG. **3**A. Although not shown in FIG. **3**A, the device **200** further includes a transistor structure (such as the transistor structure **101** in FIG. **1**C) disposed in or on a substrate (such as the semiconductor substrate **100** in FIG. **1**C). The metal layer **302** is an Nth metal layer above the transistor structure, where N is a natural number. The device **200** includes an MRAM region **100**A for forming an MRAM array therein and a logic region **100**B for forming logic devices therein. The metal layer **302** includes an IMD layer **206** and metal lines **208** in both the MRAM region **100**A and the logic region **100**B. The IMD layer **206** can be an oxide, such as silicon dioxide, a low-k dielectric material such as carbon doped oxides, or an extreme low-k dielectric material such as porous carbon doped silicon dioxide. The metal lines **208** can be made of a metal, such as aluminum, copper, or combinations thereof. The IMD layer **206** may be formed by deposition process, such as physical vapor deposition (PVD) or chemical vapor deposition (CVD) including plasma enhanced chemical vapor deposition (PECVD). The metal lines **208** be formed by a deposition process such as PVD, CVD, ALD, or a plating process. In an embodiment, the dielectric layer **210** may include one or more dielectric materials such as Si_3N_4, SiON, SiC, SiCN, or a combination thereof, and may be deposited using PVD, CVD, ALD, or other suitable processes to a thickness in a range of about 12 nm to about 20 nm. In an embodiment, the dielectric layer **212** includes a metal-based dielectric material, such as aluminum oxide, and may be deposited using CVD, ALD, or other suitable processes to a thickness in a range of about 2 nm to about 6 nm. In an embodiment, the dielectric layer **214** includes a silicon oxide based dielectric material such as un-doped silicate glass (USG), and may be deposited using CVD, PVD, or other suitable processes to a thickness in a range of about 40 nm to about 100 nm.

At operation **504**, the method **500** (FIG. **2**A) forms BEVA **220** and barrier layer **218** that penetrate through the dielectric layers **214**, **212**, and **210** and electrically connect to some of the metal lines **208** in the MRAM region **100**A, such as shown in FIG. **3**B. For example, the operation **504** may form an etch mask over the dielectric layer **214** using photolithography and etching processes, where the etch

mask provides openings corresponding to the location of the BEVA **220** and the barrier layer **218** and covers the rest of the device **200**. In an embodiment, each BEVA **220** corresponds to an MRAM cell **249** in an MRAM array **250**. Then, the operation **504** etches the dielectric layers **214**, **212**, and **210** through the etch mask to reach the metal layer **302**, thereby forming openings (or trenches or holes) in the dielectric layers **214**, **212**, and **210**. Subsequently, the operation **504** deposits the barrier layer **218** on the surfaces of the openings and deposits the BEVA **220** over the barrier layer **218**. Thereafter, the operation **504** may perform a chemical mechanical planarization (CMP) process to the BEVA **220** and the barrier layer **218**, thereby removing any excessive materials on the top surface of the dielectric layer **214**. In an embodiment, the barrier layer **218** may include titanium nitride, tantalum nitride, or other suitable conductive diffusion barrier, and may be deposited using ALD, PVD, CVD, or other suitable deposition methods; and the BEVA **220** may include tungsten, titanium, tantalum, tungsten nitride, titanium nitride, tantalum nitride, a combination thereof, or other suitable metal or metal compound, and may be deposited using CVD, PVD, ALD, plating, or other suitable deposition methods.

At operation **506**, the method **500** (FIG. **2**A) deposits a bottom electrode (BE) layer **222**, an MTJ (or MTJ stack) **150**, and a top electrode (TE) layer **228** over the dielectric layer **214**, the barrier layer **218**, and the BEVA **220**, such as shown in FIG. **3**C. Particularly, the BE layer **222** electrically connects to the BEVA **220**. In an embodiment, the BE **222** may include a metal nitride such as TaN, TiN, Ti/TiN, TaN/TiN, Ta, or a combination thereof, and may be deposited using CVD, ALD, or other suitable deposition methods. The BE **222** may be formed to have a thickness in a range about 1 nm to about 8 nm in some embodiments. The MTJ **150** may be deposited using CVD, PVD, ALD, or other suitable deposition methods, and may have a thickness in a range of about 20 nm to about 50 nm in some embodiments. In an embodiment, the TE **228** may include a metal nitride such as TaN, TiN, Ti/TiN, TaN/TiN, Ta, or a combination thereof, and may be deposited using CVD, ALD, or other suitable deposition methods. The TE **228** may be formed to have a thickness in a range about 10 nm to about 25 nm in some embodiments.

At operation **508**, the method **500** (FIG. **2**A) patterns the BE layer **222**, the MTJ **150**, and the TE layer **228** into individual MRAM cells **249**. For example, using photolithography and etching processes, the operation **508** may form an etch mask **402** that covers the areas of the TE layer **228** that correspond to individual MRAM cells **249** and exposes the rest of the TE layer **228**, such as shown in FIG. **3**D. Then, the operation **508** etches the TE layer **228**, the MTJ **150**, the BE layer **222**, and the dielectric layer **214** through the etch mask **402** to form individual MRAM cells **249**, such as shown in FIG. **3**E. The etching process may be wet etching, dry etching, reactive ion etching, or other suitable etching methods. The etch mask **402** is removed thereafter, using etching, stripping, ashing, or other suitable methods.

At operation **510**, the method **500** (FIG. **2**A) forms spacers **224** over the sidewalls of the MRAM cells **249**, such as shown in FIG. **3**F. In some embodiments, the spacers **224** are considered part of the MRAM cells **249**. For example, the operation **510** may deposit a blanket dielectric layer over the device **200** in both the MRAM region **100**A and the logic region **100**B using CVD, ALD, or other suitable methods, then anisotropically etch the blanket dielectric layer to remove it from the top surface of the dielectric layer **214** and from the top surface of the TE **228**. Portions of the dielectric layer remain on sidewalls of the MRAM cells **249**, becoming the spacers **224**. The spacers **224** may include one or more dielectric materials such as silicon oxide (SiO_x), silicon nitride (SiN_x), silicon oxynitride ($Si_xO_yN_z$), or the like. The spacers **224** may include one or multiple layers of the dielectric materials in various embodiments.

At operation **512**, the method **500** (FIG. **2**A) forms a dielectric layer (also referred to as a protection layer) **226** over the spacers **224** and the dielectric layer **214**, and forms a dielectric layer **216** over the dielectric layer **226** in the MRAM region **100**A, such as shown in FIG. **3**G. For example, the operation **512** may deposit the dielectric layer **226** and the dielectric layer **216** in both the MRAM region **100**A and the logic region **100**B; form an etch mask using photolithography and etching processes where the etch mask covers the MRAM region **100**A and exposes the logic region **100**B; etch the dielectric layer **226** and the dielectric layers **216**, **214**, and **212** through the etch mask until the dielectric layer **210** is exposed in the logic region **100**B; and remove the etch mask. The dielectric layer **226** may be deposited using CVD, ALD, or other suitable methods. The dielectric layer **216** may be deposited using CVD, PVD, or other suitable methods. The dielectric layer **226** and the dielectric layers **216**, **214**, and **212** may be etched using wet etching, dry etching, reactive ion etching, or other suitable methods.

After the dielectric layer **226** and the dielectric layers **216**, **214**, and **212** are etched, the operation **512** further forms a dielectric layer **215** in the logic region **100**B, such as shown in FIG. **3**H. The dielectric layer **215** can be an oxide, such as silicon dioxide, a low-k dielectric material such as carbon doped oxides, or an extreme low-k dielectric material such as porous carbon doped silicon dioxide. The dielectric layer **215** may be deposited using CVD, PVD, or other suitable methods. The operation **512** further performs a CMP process to planarize the top surfaces of the dielectric layers **215** and **216**, the dielectric layer **226**, and the TE **228**.

At operation **514**, the method **500** (FIG. **2**A) forms metal vias **213** and metal lines **217** in the logic region **100**B, such as shown in FIG. **3**I. The metal vias **213** and metal lines **217** may be formed using dual damascene process, or other suitable methods. For example, the operation **514** may etch holes and/or trenches in the dielectric layer **215** to expose the top surface of the metal lines **208**, deposit one or more metals into the holes and/or trenches, and perform a CMP process to the one or more metals. Portions of the one or more metals remaining in the holes and/or trenches become the metal vias **213** and metal lines **217**. The metal vias **213** and the metal lines **217** may include aluminum, copper, or other suitable low resistance metals, and may be deposited using PVD, CVD, ALD, plating, or other suitable methods. After the operation **514** finishes, the top surface of the metal lines **217** are substantially coplanar with the top surface of the TE **228**. Using the operations **504** through **514**, the metal layer **304** is thus formed over the metal layer **302**.

At operation **516**, the method **500** (FIG. **2**B) deposits dielectric layers **230**, **232**, and **234** over the metal layer **304** in both the MRAM region **100**A and the logic region **100**B, such as shown in FIG. **3**J. In an embodiment, the dielectric layer **230** may include one or more dielectric materials such as a nitride (for example, silicon nitride) or silicon carbide, and may be deposited using ALD, CVD, PVD, or other suitable methods. The dielectric layer **230** may have a thickness in a range about 10 nm to about 15 nm in some embodiments. In an embodiment, the dielectric layer **232** may include a metal-based dielectric material, such as aluminum oxide (i.e., AlO_x such as Al_2O_3), and may be

deposited using ALD, CVD, PVD, or other suitable methods. The dielectric layer **232** may have a thickness in a range about 4 nm to about 10 nm in some embodiments. In an embodiment, the dielectric layer **234** may include un-doped silicate glass (USG), or doped silicon oxide such as borophosphosilicate glass (BPSG), fused silica glass (FSG), phosphosilicate glass (PSG), boron doped silicon glass (BSG), and/or other suitable dielectric materials, and may be deposited using CVD, PVD, or other suitable methods. The dielectric layer **234** may have a thickness in a range about 40 nm to about 100 nm in some embodiments.

At operation **518**, the method **500** (FIG. **2**B) forms an etch mask **404** over the dielectric layer **234**, such as shown in FIG. **3**J. The etch mask **404** provides openings **406**A over the MRAM region **100**A and openings **406**B over the logic region **100**B. In an embodiment, the etch mask **404** includes a material that has etch selectivity with respect to the dielectric layers **234**, **232**, and **230** in an etching process. For example, the etch mask **404** may include a resist pattern and may further include a patterned hard mask under the resist pattern in an embodiment. For example, the patterned hard mask may include titanium nitride and may have a thickness in a range of about 10 nm to about 40 nm in an embodiment. The operation **518** may include depositing a hard mask layer over the dielectric layer **234**, coating a photoresist over the hard mask layer, performing photolithography (such as exposing and developing) to the photoresist layer to form a resist pattern, and etching the hard mask layer through the resist pattern to form a patterned hard mask. The patterned hard mask and the resist pattern collectively form the etch mask **404**. In the present embodiment, each of the openings **406**A corresponds to a column of MRAM cells **249** in the MRAM array **250**. In some embodiments, each of the openings **406**A corresponds to a subset of a column of MRAM cells **249** in the MRAM array **250**. Thus, each of the openings **406**A is generally longer (along the "x" direction) than the opening **406**B that corresponds to a single via.

At operation **520**, the method **500** (FIG. **2**B) etches the dielectric layers **234**, **232**, and **230** through the etch mask **404** to expose the MRAM cells **249** in the MRAM region **100**A and the metal lines **217** in the logic region **100**B. FIGS. **3**K and **3**K-**1** illustrate a resultant device **200** according to an embodiment. FIG. **3**K illustrates the device **200** along the B-B line in FIG. **1**B (i.e., along the "x" direction), and FIG. **3**K-**1** illustrates the device **200** along the A-A line in FIG. **1**B (i.e., along the "y" direction perpendicular to the "x" direction). In an embodiment, the operation **520** may perform multiple etching processes that are designed to etch each of the dielectric layers **234**, **232**, and **230** separately. For example, the operation **520** may perform a first etching process that is designed to etch the dielectric layer **234** with minimal or no etching to the etch mask **404**, perform a second etching process that is designed to etch the dielectric layer **232** with minimal or no etching to the etch mask **404**, and perform a third etching process that is designed to etch the dielectric layer **230** with minimal or no etching to the etch mask **404**. The multiple etching processes may include wet etching, dry etching, or a combination of wet etching and dry etching. In some embodiments, an etching process in the operation **520** may etch more than one dielectric layer. When the dielectric layer **230** is etched, a slight over-etching is performed to ensure that the top surface of the MRAM cell **249** and the top surface of the metal lines **217** are exposed.

Because the openings **406**A are generally much larger than the openings **406**B, etching of the dielectric layers **234**, **232**, and/or **230** may proceed at different etching rates between the MRAM region **100**A and logic region **100**B (referred to as etch loading effects). For example, the dielectric layer **234** (or **232** or **230**) may be etched faster in the MRAM region **100**A than in the logic region **100**B. Particularly, the dielectric layer **230** is etched faster in the MRAM region **100**A than in the logic region **100**B due to the etch loading effects. As a result, the dielectric layer **216** may be etched as well, resulting in dips **160** in the dielectric layer **216** between adjacent MRAM cells **249**. In some embodiments, the dips **160** may have a depth d4 that is less than 50 nm, such as about 5 nm to about 50 nm, from the top surface of the dielectric layer **216** before etching. If the depth d4 is too large (such as more than 50 nm), the loss of the dielectric layer **216** might be too great and the coupling capacitance between the adjacent MRAM cells **249** might be undesirably high. In some embodiments, the dips **160** may be substantially equal to 0 nm by controlling the various etching parameters. In some embodiments, the dips **160** may extend below the top surface of the MTJ **150**. In some embodiments, the TE **228** is partially removed by the etching processes. In some alternative embodiments, the TE **228** is completely removed and the top surface of the MTJ **150** is exposed. As shown in FIGS. **3**K and **3**K-**1**, the operation **520** extends the openings **406**A and **406**B into the dielectric layers **234**/**232**/**230**. Particularly, the opening (or trenches) **406**A extends continuously from a first one of the MRAM cells **249** to a last one of the MRAM cells **249** in a same column of an MRAM array (which may have hundreds or thousands of MRAM cells **249** in some embodiments). After the MRAM cells **249** and the metal lines **217** are exposed, the etch mask **404** may be removed.

At operation **522**, the method **500** (FIG. **2**B) form vias in the openings **406**A and **406**B. For example, the operation **522** may deposit one or more metallic materials **260** into the openings **406**A and **406**B and over the top surface of the dielectric layer **234**, such as shown in FIG. **3**L. The one or more metallic materials **260** also fill in the dips **160**. In embodiments (such as shown in FIGS. **7** and **8**) where the TE **228** are partially or completely removed by the operation **518**, the one or more metallic materials **260** also fill space directly above the MTJ **150** and between the dielectric layer **226** on two opposing sidewalls of the MRAM cell **249**. The one or more metallic materials **260** may include a barrier layer or a seed layer having Ta, TaN, Ti, TiN, or other suitable conductive material and a low-resistance fill metal such as copper, aluminum, or other suitable metal.

Subsequently, the operation **522** performs a CMP process to the one or more metallic materials **260** to remove them from the top surface of the dielectric layer **234**. The resultant structure of the device **200** is shown in FIGS. **3**M and **3**M-**1** according to an embodiment. FIG. **3**M illustrates the device **200** along the B-B line in FIG. **1**B (i.e., along the "x" direction), and FIG. **3**M-**1** illustrates the device **200** along the A-A line in FIG. **1**B (i.e., along the "y" direction perpendicular to the "x" direction). Remaining portions of the one or more metallic materials **260** in the opening (or trench) **406**A become the slot via **260**A. Remaining portions of the one or more metallic materials **260** in the opening (or trench) **406**B become the vias **260**B. As shown in FIG. **3**M, the slot via **260**A has a length L1 along the "x" direction. As shown in FIG. **3**M-**1**, the slot via **260**A has a width W1 along the "y" direction. In some embodiments, the length L1 is in a range of about 100 nm to about 10,000 nm, the width W1 is in a range of about 20 nm to about 100 nm, and the length L2 of the via **260**B along the "x" direction is about 20 nm to about 60 nm. In some embodiments, a ratio of the length L1 to the length L2 is about 5 to 500. Therefore, the slot via **260**A provide a much lower series resistance than the via

260B. In some embodiments, the length of the MTJ **150** along the "x" direction is in a range of about 20 nm to about 100 nm. In the present embodiment, the length L1 is about equal to or greater than the number of the MTJs **150** in the same column multiplying the sum of the length of the MTJ **150** and the pitch of the MTJs **150**. Further, the slot via **260**A has a thickness d2 directly above the MTJ **150** and a thickness d3 directly above the space between two adjacent MTJs **150**, and the via **260**B has a thickness d1. In an embodiment, the thickness d2 is equal to or greater than the thickness d1, and the thickness d3 is greater than the thickness d1. In some embodiments, the thickness d3 is equal to or greater than the thickness d2. For example, the thickness d3 is greater than the thickness d2 by about 5 nm to about 50 nm in some embodiments. In some examples, the thickness d2 is in a range of 40 nm to 80 nm, and the thickness d3 is in a range of 45 nm to 130 nm.

At operation **524**, the method **500** (FIG. **2**B) deposits a dielectric layer **236** over the vias **260**A and **260**B and over the dielectric layer **234** in both the MRAM region **100**A and the logic region **100**B, such as shown in FIG. **3**N. In an embodiment, the dielectric layer **236** includes one or more oxide based dielectric materials such as silicon dioxide, tetraethylorthosilicate (TEOS) formed oxide, un-doped silicate glass, or doped silicon oxide such as borophosphosilicate glass (BPSG), fused silica glass (FSG), phosphosilicate glass (PSG), boron doped silicon glass (BSG), and/or other suitable dielectric materials, and may be deposited using CVD, PVD, or other suitable methods. Then, the operation **524** forms an etch mask **408** over the dielectric layer **236**, such as shown in FIG. **3**N. The etch mask **408** provides openings **410**A over the slot via **260**A and openings **410**B over the vias **260**B. In an embodiment, the etch mask **408** includes a material that has etch selectivity with respect to the dielectric layer **236** in an etching process. The etch mask **408** may be formed using deposition, photolithography, and etching processes, as discussed above with reference to the etch mask **404**.

At operation **526**, the method **500** (FIG. **2**B) etches the dielectric layer **236** through the etch mask **408** to expose the slot via **260**A in the MRAM region **100**A and the vias **260**B in the logic region **100**B, such as shown in FIG. **3**O. The etching process may use a wet etching, dry etching, or a combination of wet etching and dry etching. The etching process extends the openings **410**A and **410**B through the dielectric layer **236** until the top surface of the slot via **260**A and the top surface of the vias **260**B are exposed. The openings **410**A and **410**B are wider than the slot via **260**A and the vias **260**B, respectively, along the "x" direction. Subsequently, the etch mask **408** is removed.

At operation **528**, the method **500** (FIG. **2**B) form metal lines in the openings **410**A and **410**B. For example, the operation **528** may deposit one or more metallic materials **262** into the openings **410**A and **410**B and over the top surface of the dielectric layer **236**, such as shown in FIG. **3**P. The one or more metallic materials **262** may include a barrier layer or a seed layer having Ta, TaN, Ti, TiN, or other suitable conductive material and a low-resistance fill metal such as copper, aluminum, or other suitable metal.

Subsequently, the operation **528** performs a CMP process to the one or more metallic materials **262** to remove them from the top surface of the dielectric layer **236**. The resultant structure of the device **200** is shown in FIG. **3**Q according to an embodiment. Remaining portions of the one or more metallic materials **262** in the opening (or trench) **410**A become the metal line **262**A. Remaining portions of the one or more metallic materials **262** in the opening (or trench) **410**B become the metal lines **262**B. The metal line **262**A is slightly longer than the slot via **260**A along the "x" direction. The metal line **262**B is slightly longer than the via **260**B along the "x" direction. Using the operations **516** through **528**, the metal layer **306** is thus formed over the metal layer **304**.

At operation **530**, the method **500** (FIG. **2**B) performs further fabrication to the device **200**, such as forming one or more metal layers over the metal layer **306**, forming passivation layer(s), and performing more back end of processes.

FIGS. **2**A and **2**C illustrate the method **500** in an alternative embodiment, which is briefly described below. Referring to FIG. **2**C, after the operation **514** has finished as discussed above, the method **500** proceeds to operation **540** to deposit dielectric layers **230**, **232**, **234**, and **236**, such as shown in FIG. **4**A. Then, at operation **542**, the method **500** (FIG. **2**C) etches the dielectric layer **236** to form the openings (or trenches) **410**A and **410**B, such as shown in FIG. **4**B. For example, the operation **542** may form an etch mask such as the etch mask **408** shown in FIG. **3**N, and then etch the dielectric layer **236** through the etch mask until the dielectric layer **234** is exposed. The etch mask is subsequently removed. At operation **544**, the method **500** (FIG. **2**C) etches the dielectric layers **234**, **232**, and **230** to form the openings (or trenches) **406**A and **406**B, such as shown in FIG. **4**C. For example, the operation **544** may form an etch mask such as the etch mask **404** shown in FIG. **3**J, and then etch the dielectric layers **234**, **232**, and **230** through the etch mask until the MTJs **150** and the metal lines **217** are exposed. The etch mask is subsequently removed. This operation is similar to the operation **520**. Then, at operation **546**, the method **500** (FIG. **2**C) forms the vias **260**A and **260**B and the metal lines **262**A and **262**B. For example, the operation **546** may deposit one or more metallic materials **264** into the openings **406**A, **406**B, **410**A, and **410**B, as well as over the top surface of the dielectric layer **236**, such as shown in FIG. **4**E. The one or more metallic materials **264** also fill in the dips **160**. Then, the operation **546** performs a CMP process to the one or more metallic materials **264** to remove them from the top surface of the dielectric layer **236**. The resultant structure of the device **200** is shown in FIG. **4**E. Remaining portions of the one or more metallic materials **264** in the opening (or trench) **406**A, **406**B, **410**A, and **410**B become the slot via **260**A, the vias **260**B, the metal line **262**A, and the metal lines **262**B, respectively. Then, at operation **530**, the method **500** (FIG. **2**C) proceeds to further fabrications.

In another embodiment, the operations **544** may be performed before the operation **542**. For example, after the operation **540** has deposited the dielectric layers **230**, **232**, **234**, and **236**, the method **500** may proceed to the operation **544** to etch the dielectric layers **230**, **232**, **234**, and **236** to form the openings (or trenches) **406**A and **406**B, such as shown in FIG. **5**A. This operation is similar to the operation **520**. Then, the method **500** may proceed to the operation **542** to etch the dielectric layer **236** to form the openings (or trenches) **410**A and **410**B, such as shown in FIG. **5**B. Thereafter, method **500** may proceed to the operation **546** to form the vias **260**A and **260**B and the metal lines **262**A and **262**B as discussed above.

FIG. **6** illustrates an embodiment of the device **200** where the etching process in the operation **520** (or in the operation **544**) over-etches the dielectric layer **216** between adjacent MTJs **150** such that the top surface **150'** of the MTJ **150** is above the bottom surface **260'** of the slot via **260**A in space

between the adjacent MTJs **150**. This advantageously increases the total volume of the slot via **260**A for reduced series resistance.

FIG. **7** illustrates an embodiment of the device **200** where the etching process in the operation **520** (or in the operation **544**) partially removes the TE **288** such that a portion of the slot via **260**A is disposed laterally between the protection layer on two opposing sidewalls of an MTJ **150**. This advantageously increases the total volume of the slot via **260**A for reduced series resistance.

FIG. **8** illustrates an embodiment of the device **200** where the etching process in the operation **520** (or in the operation **544**) completely removes the TE **288** such that a portion of the slot via **260**A is disposed laterally between the protection layer on two opposing sidewalls of an MTJ **150** and directly on top of the MTJ **150**. This advantageously increases the total volume of the slot via **260**A for reduced series resistance.

FIG. **9** illustrates an embodiment of the device **200** where multiple slot vias **260**A are connected by a common metal line **262**A to function as a bit line or a part of a bit line. Due to the presence of the slot vias **260**A, the series resistance of the bit line is greatly reduced. In various embodiments, a bit line in the device **200** may include one slot via **260**A or multiple slot vias **260**A (such as two, three, four, and so on), depending on design considerations such as mask making complexity and etching balance among various areas in the device **200**. In the embodiment depicted in FIG. **9**, the dipping in the dielectric layer **216** between the adjacent MRAM cells **249** is negligible (about 0 nm). In other words, the bottom surface of the slot via **260**A and the top surface of the dielectric layer **216** are substantially planar. In an alternative embodiment, the dipping in the dielectric layer **216** between the adjacent MRAM cells **249** may be in a range of about 5 nm to about 50 nm, such as the embodiments depicted in FIGS. **7** and **8** (in other words, the bottom of the slot via **260**A extends below the top surface of the dielectric layer **216**). Further, in the embodiment depicted in FIG. **9**, the TE **228** has a top surface that is substantially coplanar with the bottom surface of the slot via **260**A and the top surface of the dielectric layer **216**. In an alternative embodiment, the TE **228** may be partially or completely removed and the space therein is filled with the slot via **260**A, such as the embodiments depicted in FIGS. **7** and **8**.

Although not intended to be limiting, one or more embodiments of the present disclosure provide many benefits to a semiconductor device and the formation thereof. For example, embodiments of the present disclosure provide a semiconductor device with an MRAM array in an MRAM region. The MRAM array is provided with a slot via that extends continuously above a column of MRAM cells in the MRAM array and has a thickness that is equal to or greater than vias in the same metal layer in a logic region. The slot via advantageously reduces the series resistance of the bit line for the column of the MRAM cells. Furthermore, formation of this semiconductor device can be readily integrated into existing semiconductor fabrication processes.

In one example aspect, the present disclosure is directed to a semiconductor structure that includes a first metal layer, a second metal layer disposed over the first metal layer, and a third metal layer disposed immediately above the second metal layer. The second metal layer includes multiple magnetic tunneling junction (MTJ) devices in a memory device region and a first conductive feature in a logic device region. Each of the MTJ devices includes a bottom electrode and an MTJ stack disposed over the bottom electrode. The third metal layer includes a first via disposed over and electrically connecting to the first conductive feature, and a slot via disposed over the MTJ devices and electrically connecting to the MTJ stack of each of the MTJ devices. The slot via occupies a space extending continuously and laterally from a first one of the MTJ devices to a last one of the MTJ devices. A first thickness of the first via is equal to or less than a second thickness of the slot via directly above the MTJ stack of one of the MTJ devices. The third metal layer further includes a second conductive feature disposed over and electrically connecting to the first via, and a third conductive feature disposed over and electrically connecting to the slot via.

In an embodiment of the semiconductor structure, both the slot via and the first via include copper. In a further embodiment, both the second and the third conductive features include copper.

In an embodiment of the semiconductor structure, the second metal layer includes a dielectric feature laterally disposed between two adjacent ones of the MTJ devices, and a third thickness of the slot via directly above the dielectric feature is greater than the second thickness. In a further embodiment, the third thickness is greater than the second thickness by about 5 nm to about 50 nm.

In an embodiment of the semiconductor structure, one of the MTJ devices further includes a top electrode vertically between the slot via and the MTJ stack of the one of the MTJ devices. In another embodiment, a portion of the slot via extends to a level lower than a top surface of the MTJ stack of one of the MTJ devices

In another embodiment, each of the MTJ devices further includes a spacer on sidewalls of the MTJ stack of the respective MTJ device, and a protection layer on sidewalls of the spacer, wherein a portion of the slot via is disposed in a space laterally between the protection layer of two adjacent ones of the MTJ devices. In a further embodiment, a bottom surface of the portion of the slot via is substantially flat.

In another example aspect, the present disclosure is directed to a method that includes providing a structure having a first metal layer and a second metal layer disposed over the first metal layer, wherein the second metal layer includes multiple magnetic tunneling junction (MTJ) devices in a memory device region and a first conductive feature in a logic device region, wherein each of the MTJ devices includes a bottom electrode, an MTJ stack disposed over the bottom electrode, and a top electrode disposed over the MTJ stack. The method further includes forming one or more dielectric layers over the second metal layer; forming a first etch mask over the one or more dielectric layers, wherein the first etch mask defines a first hole above the first conductive feature and a second hole above the MTJ devices and extending continuously from a first one of the MTJ devices to a last one of the MTJ devices; and etching the one or more dielectric layers through the first and the second holes to form a first trench and a second trench, respectively, in the one or more dielectric layers, wherein the first trench exposes the first conductive feature and the second trench exposes a portion of each of the MTJ devices. The method further includes depositing a first metallic material into the first and the second trenches and above the one or more dielectric layers; and performing a chemical mechanical planarization process to the first metallic material such that a first portion of the first metallic material remains in the first trench, a second portion of the first metallic material remains

in the second trench, and the first metallic material is removed from a top surface of the one or more dielectric layers.

In an embodiment, the method further includes forming a second dielectric layer over the one or more dielectric layers and over the first and the second portions of the first metallic material; forming a second etch mask over the second dielectric layer, wherein the second etch mask defines a third hole above the first portion of the first metallic material and a fourth hole above the second portion of the first metallic material; etching the second dielectric layer through the third and the fourth holes to form a third trench and a fourth trench, respectively, in the second dielectric layer, wherein the third and the fourth trenches expose the first and the second portions of the first metallic material; and depositing a second metallic material into the third and the fourth trenches and above the second dielectric layer. In a further embodiment, the method includes performing another chemical mechanical planarization process to the second metallic material such that a first portion of the second metallic material remains in the third trench, a second portion of the second metallic material remains in the fourth trench, and the second metallic material is removed from a top surface of the second dielectric layer.

In an embodiment of the method, the second metal layer further includes dielectric features laterally between adjacent ones of the MTJ devices, and the etching of the one or more dielectric layers partially removes the dielectric features. In another embodiment of the method, the etching of the one or more dielectric layers partially removes the top electrode of at least one of the MTJ devices. In yet another embodiment of the method, the etching of the one or more dielectric layers completely removes the top electrode of at least one of the MTJ devices.

In yet another example aspect, the present disclosure is directed to a method that includes providing a structure having a first metal layer and a second metal layer disposed over the first metal layer, wherein the second metal layer includes multiple magnetic tunneling junction (MTJ) devices in a memory device region and a first conductive feature in a logic device region, wherein each of the MTJ devices includes a bottom electrode, an MTJ stack disposed over the bottom electrode, and a top electrode disposed over the MTJ stack. The method further includes forming a first dielectric layer over the second metal layer and a second dielectric layer over the first dielectric layer; forming a first trench and a second trench in the first dielectric layer, wherein the first trench exposes the first conductive feature and the second trench exposes a portion of each of the MTJ devices; forming a third trench and a fourth trench in the second dielectric layer, wherein the third trench is directly above the first conductive feature and the fourth trench is directly above the MTJ devices; depositing a first metallic material into the first, the second, the third, and the fourth trenches and above the second dielectric layer; and performing a chemical mechanical planarization process to the first metallic material such that a first portion of the first metallic material remains in the first and the third trenches, a second portion of the first metallic material remains in the second and the fourth trenches, and the first metallic material is removed from a top surface of the second dielectric layer.

In an embodiment of the method, the second metal layer further includes dielectric features laterally between adjacent ones of the MTJ devices, and the forming of the first trench and the second trench partially removes the dielectric features. In another embodiment of the method, the forming of the first trench and the second trench is performed after the forming of the third trench and the fourth trench. In another embodiment of the method, the forming of the first trench and the second trench partially removes the top electrode of at least one of the MTJ devices. In yet another embodiment of the method, the forming of the first trench and the second trench completely removes the top electrode of at least one of the MTJ devices.

The foregoing outlines features of several embodiments so that those of ordinary skill in the art may better understand the aspects of the present disclosure. Those of ordinary skill in the art should appreciate that they may readily use the present disclosure as a basis for designing or modifying other processes and structures for carrying out the same purposes and/or achieving the same advantages of the embodiments introduced herein. Those of ordinary skill in the art should also realize that such equivalent constructions do not depart from the spirit and scope of the present disclosure, and that they may make various changes, substitutions, and alterations herein without departing from the spirit and scope of the present disclosure.

What is claimed is:

1. A method, comprising:

providing a structure having a first metal layer and a second metal layer disposed over the first metal layer, wherein the second metal layer includes multiple magnetic tunneling junction (MTJ) devices in a memory device region and a first conductive feature in a logic device region, wherein each of the MTJ devices includes a bottom electrode, an MTJ stack disposed over the bottom electrode, and a top electrode disposed over the MTJ stack;

forming one or more dielectric layers over the second metal layer;

forming a first etch mask over the one or more dielectric layers, wherein the first etch mask defines a first hole above the first conductive feature and a second hole above the MTJ devices and extending continuously from a first one of the MTJ devices to a last one of the MTJ devices;

etching the one or more dielectric layers through the first and the second holes to form a first trench and a second trench, respectively, in the one or more dielectric layers, wherein the first trench exposes the first conductive feature and the second trench exposes a portion of each of the MTJ devices, wherein the second metal layer further includes dielectric features laterally between adjacent ones of the MTJ devices, and the etching of the one or more dielectric layers partially removes the dielectric features;

depositing a first metallic material into the first and the second trenches and above the one or more dielectric layers; and

performing a chemical mechanical planarization process to the first metallic material such that a first portion of the first metallic material remains in the first trench, a second portion of the first metallic material remains in the second trench, and the first metallic material is removed from a top surface of the one or more dielectric layers.

2. The method of claim **1**, wherein the depositing the first metallic material into the first and the second trenches and above the one or more dielectric layers includes depositing a copper material that fills the first and the second trenches.

3. The method of claim **1**, wherein the etching of the one or more dielectric layers partially removes the top electrode of at least one of the MTJ devices.

4. The method of claim 1, wherein the etching of the one or more dielectric layers completely removes the top electrode of at least one of the MTJ devices.

5. The method of claim 1, further comprising:

forming a second dielectric layer over the one or more dielectric layers and over the first and the second portions of the first metallic material;

forming a second etch mask over the second dielectric layer, wherein the second etch mask defines a third hole above the first portion of the first metallic material and a fourth hole above the second portion of the first metallic material;

etching the second dielectric layer through the third and the fourth holes to form a third trench and a fourth trench, respectively, in the second dielectric layer, wherein the third and the fourth trenches expose the first and the second portions of the first metallic material; and

depositing a second metallic material into the third and the fourth trenches and above the second dielectric layer.

6. The method of claim 5, further comprising performing another chemical mechanical planarization process to the second metallic material such that a first portion of the second metallic material remains in the third trench, a second portion of the second metallic material remains in the fourth trench, and the second metallic material is removed from a top surface of the second dielectric layer.

7. A method, comprising:

providing a structure having a first metal layer and a second metal layer disposed over the first metal layer, wherein the second metal layer includes multiple magnetic tunneling junction (MTJ) devices in a memory device region and a first conductive feature in a logic device region, wherein each of the MTJ devices includes a bottom electrode, an MTJ stack disposed over the bottom electrode, and a top electrode disposed over the MTJ stack;

forming a first dielectric layer over the second metal layer and a second dielectric layer over the first dielectric layer;

forming a first trench and a second trench in the first dielectric layer, wherein the first trench exposes the first conductive feature and the second trench exposes a portion of each of the MTJ devices;

forming a third trench and a fourth trench in the second dielectric layer, wherein the third trench is directly above the first conductive feature and the fourth trench is directly above the MTJ devices, wherein the forming of the first trench and the second trench is performed after the forming of the third trench and the fourth trench;

depositing a first metallic material into the first, the second, the third, and the fourth trenches and above the second dielectric layer; and

performing a chemical mechanical planarization process to the first metallic material such that a first portion of the first metallic material remains in the first and the third trenches, a second portion of the first metallic material remains in the second and the fourth trenches, and the first metallic material is removed from a top surface of the second dielectric layer.

8. The method of claim 7, wherein the second metal layer further includes dielectric features laterally between adjacent ones of the MTJ devices, and the forming of the first trench and the second trench partially removes the dielectric features.

9. The method of claim 7, wherein the depositing the first metallic material into the first, the second, the third, and the fourth trenches and above the second dielectric layer includes depositing copper.

10. The method of claim 7, wherein the forming of the first trench and the second trench partially removes the top electrode of at least one of the MTJ devices.

11. The method of claim 7, wherein the forming of the first trench and the second trench completely removes the top electrode of at least one of the MTJ devices.

12. A method of forming a semiconductor structure, comprising:

depositing a first metal layer on a substrate;

depositing a second metal layer over the first metal layer;

using the second metal layer, forming multiple magnetic tunneling junction (MTJ) devices in a memory device region and a first conductive feature in a logic device region, wherein each of the MTJ devices includes a bottom electrode and an MTJ stack disposed over the bottom electrode; and

depositing a third metal layer immediately above the second metal layer,

using the third metal layer, forming a first via disposed over and electrically connecting to the first conductive feature, and a slot via disposed over the MTJ devices and electrically connecting to the MTJ stack of each of the MTJ devices, wherein the slot via occupies a space extending continuously and laterally from a first one of the MTJ devices to a last one of the MTJ devices, wherein a first thickness of the first via is equal to or less than a second thickness of the slot via directly above the MTJ stack of one of the MTJ devices, wherein the third metal layer further includes a second conductive feature disposed over and electrically connecting to the first via, and a third conductive feature disposed over and electrically connecting to the slot via.

13. The method of claim 12, further comprising:

form a top electrode on one of the MTJ devices, the top electrode vertically between the slot via and the MTJ stack of the one of the MTJ devices.

14. The method of claim 12, wherein a portion of the slot via extends to a level lower than a top surface of the MTJ stack of one of the MTJ devices.

15. The method of claim 12, wherein both the slot via and the first via include copper.

16. The method of claim 15, wherein both the second and the third conductive features include copper.

17. The method of claim 12, wherein the second metal layer includes a dielectric feature laterally disposed between two adjacent ones of the MTJ devices, and a third thickness of the slot via directly above the dielectric feature is greater than the second thickness.

18. The method of claim 17, wherein the third thickness is greater than the second thickness by about 5 nm to about 50 nm.

19. The method of claim 12, further comprising:

for each of the MTJ devices, forming a spacer on sidewalls of the MTJ stack of the respective MTJ device, and a protection layer on sidewalls of the spacer, wherein a portion of the slot via is disposed in a space laterally between the protection layer of two adjacent ones of the MTJ devices.

20. The method of claim 19, wherein a bottom surface of the portion of the slot via is substantially flat.

* * * * *