US 20250287783A1

(19) United States
(12) Patent Application Publication
KIM et al.
(10) Pub. No.: US 2025/0287783 A1
(43) Pub. Date: Sep. 11, 2025

(54) **DISPLAY DEVICE AND METHOD OF MANUFACTURING DISPLAY DEVICE**

(71) Applicant: **Samsung Display Co., Ltd.**, Yongin-Si (KR)

(72) Inventors: **KEUNWOO KIM**, Seongnam-si (KR); **TAEWOOK KANG**, Seongnam-si (KR)

(21) Appl. No.: **19/214,433**

(22) Filed: **May 21, 2025**

Related U.S. Application Data

(62) Division of application No. 17/568,242, filed on Jan. 4, 2022, now Pat. No. 12,336,385.

(30) **Foreign Application Priority Data**

Apr. 22, 2021 (KR) 10-2021-0052410

Publication Classification

(51) **Int. Cl.**
H10K 59/121 (2023.01)
H10K 59/12 (2023.01)
H10K 59/131 (2023.01)
H10K 71/00 (2023.01)

(52) **U.S. Cl.**
CPC ***H10K 59/1216*** (2023.02); ***H10K 59/1213*** (2023.02); ***H10K 59/131*** (2023.02); *H10K 59/1201* (2023.02); *H10K 71/00* (2023.02)

(57) **ABSTRACT**

A display device includes a substrate including a sub-pixel area, an active layer disposed in the sub-pixel area and including first to third regions, a first channel region between the first and second regions, and a second channel region between the second and third regions, a first gate electrode disposed in the first and second channel regions, and constituting a dual gate transistor together with the first and second regions, the first channel region, the second and third regions, and the second channel region, a first gate insulating layer disposed between the active layer and the first gate electrode, and defining an opening exposing the second region, an insulating pattern in the opening, a gate electrode pattern contacting a top surface of the insulating pattern, and is spaced apart from the first gate electrode, and a light emitting structure on the dual gate transistor and the gate electrode pattern.

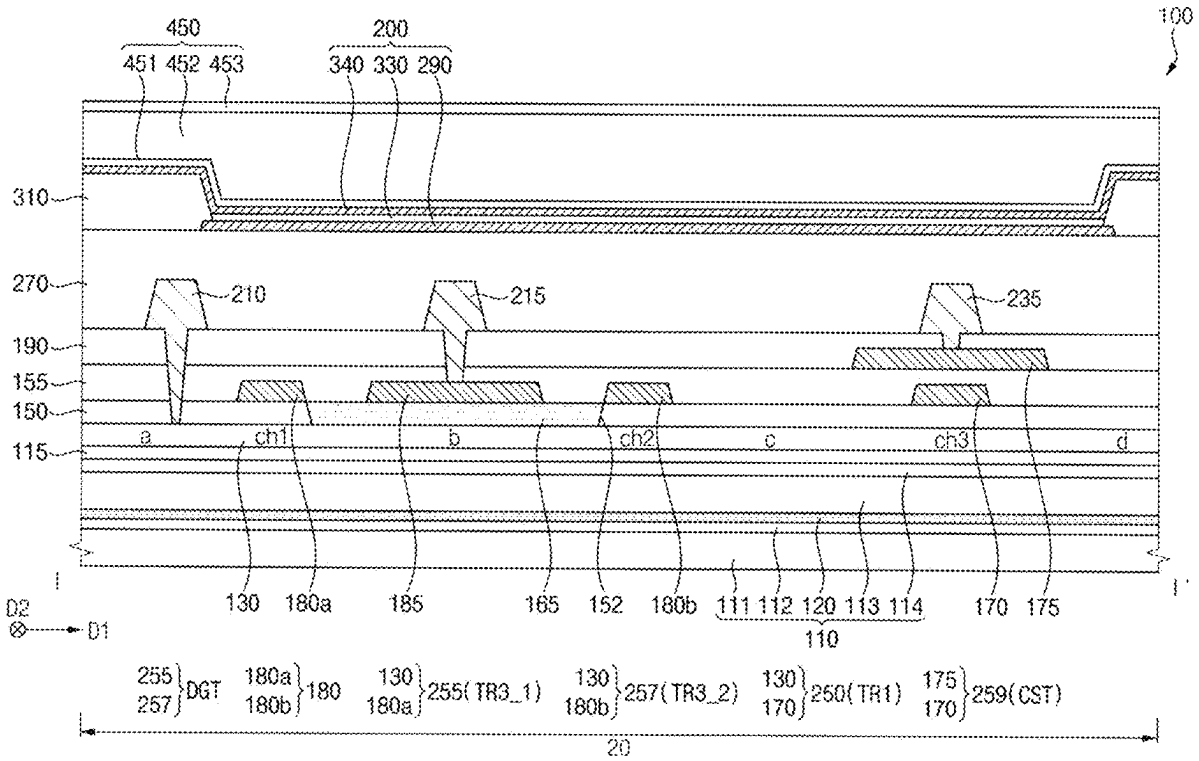

FIG. 1

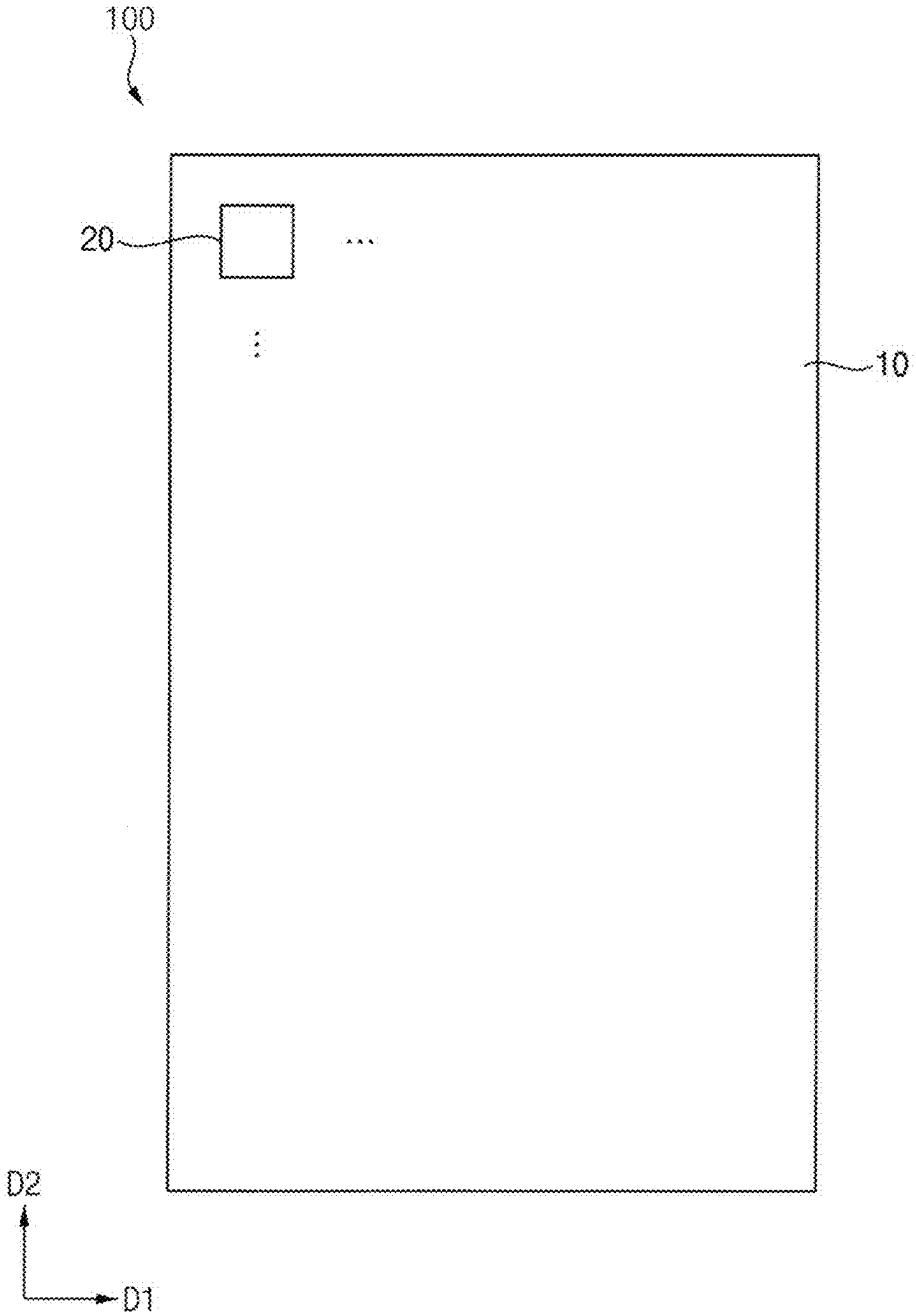

FIG. 2

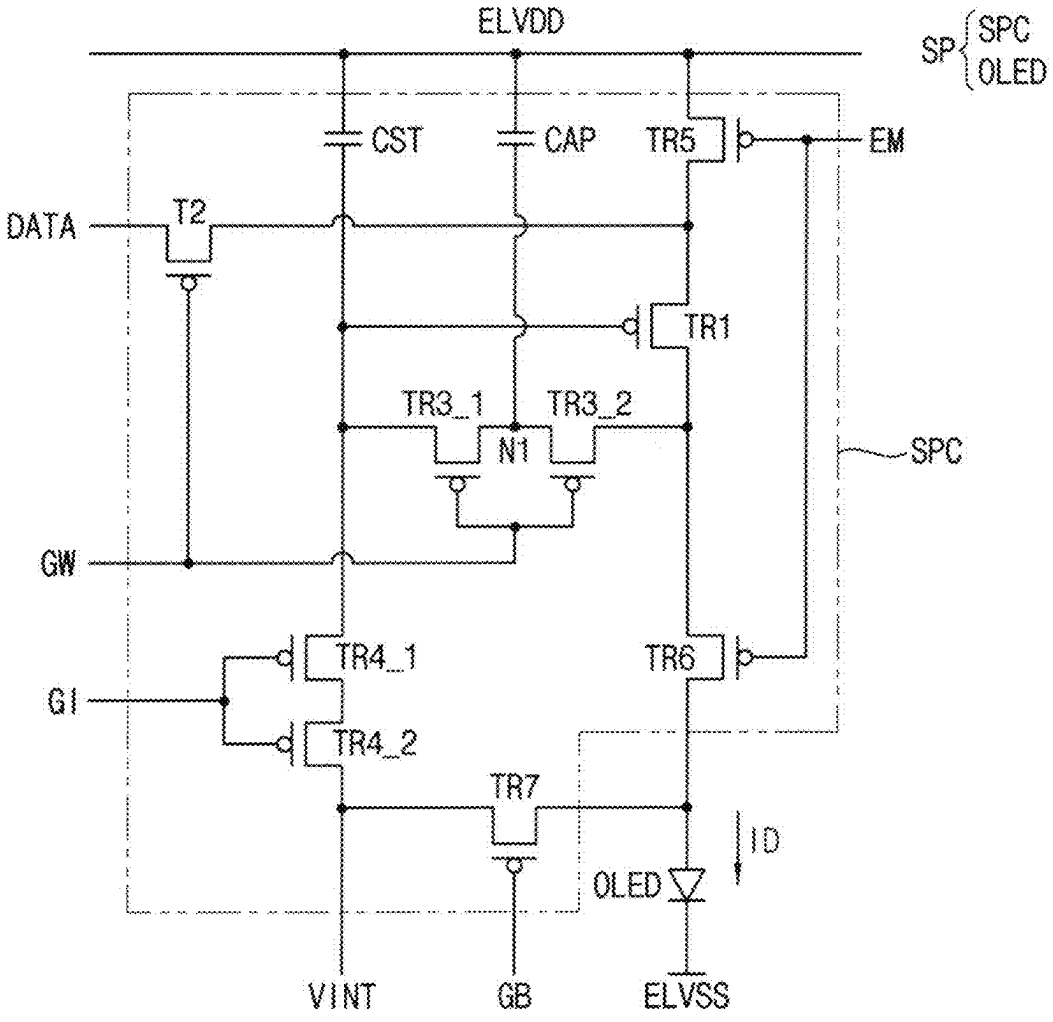
ELVDD
SP
SPC
OLED
CST
CAP
TR5
EM
DATA
T2
TR1
TR3_1
TR3_2
N1
SPC
GW
TR4_1
TR6
GI
TR4_2
TR7
ID
OLED
VINT
GB
ELVSS

FIG. 3

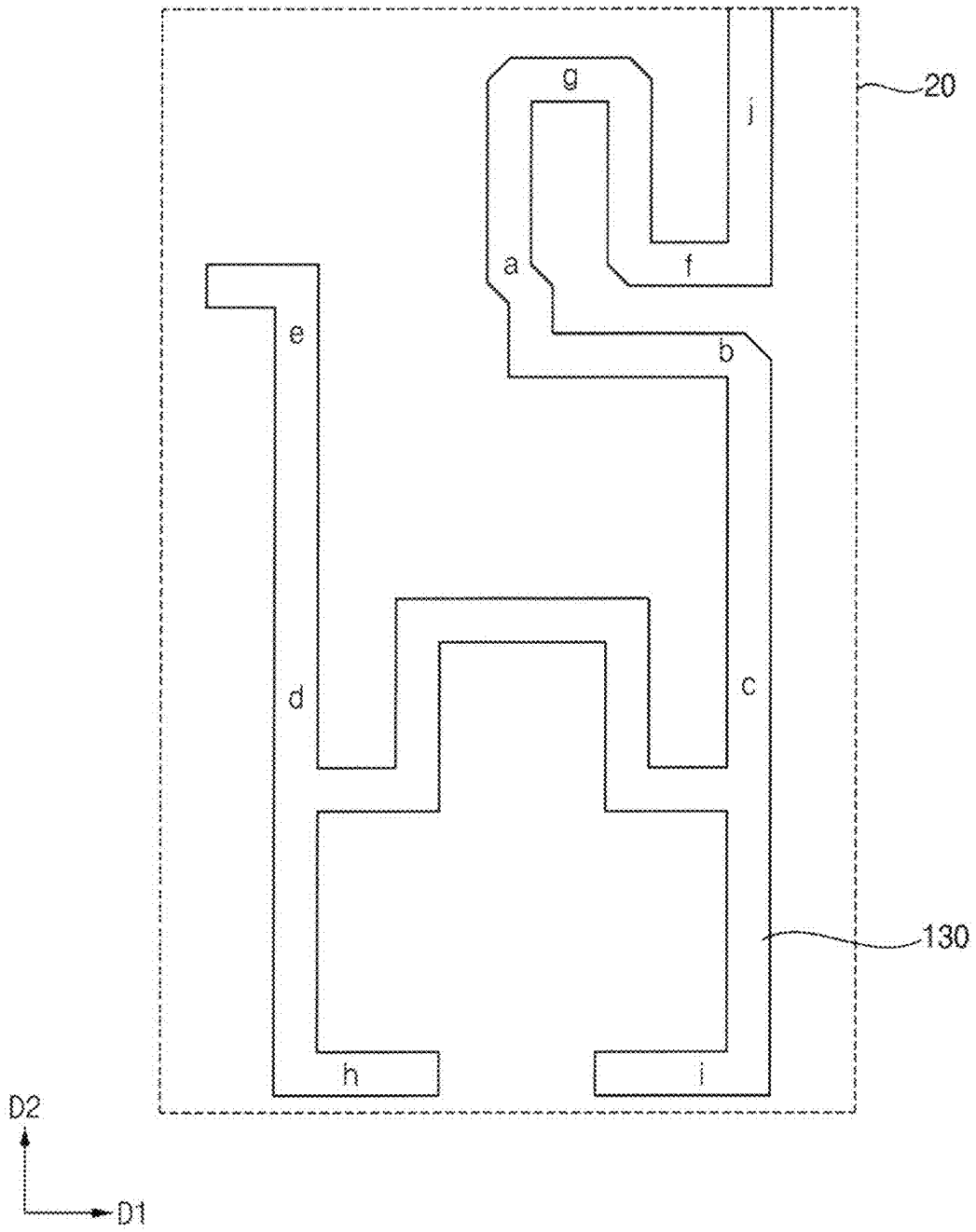

FIG. 4

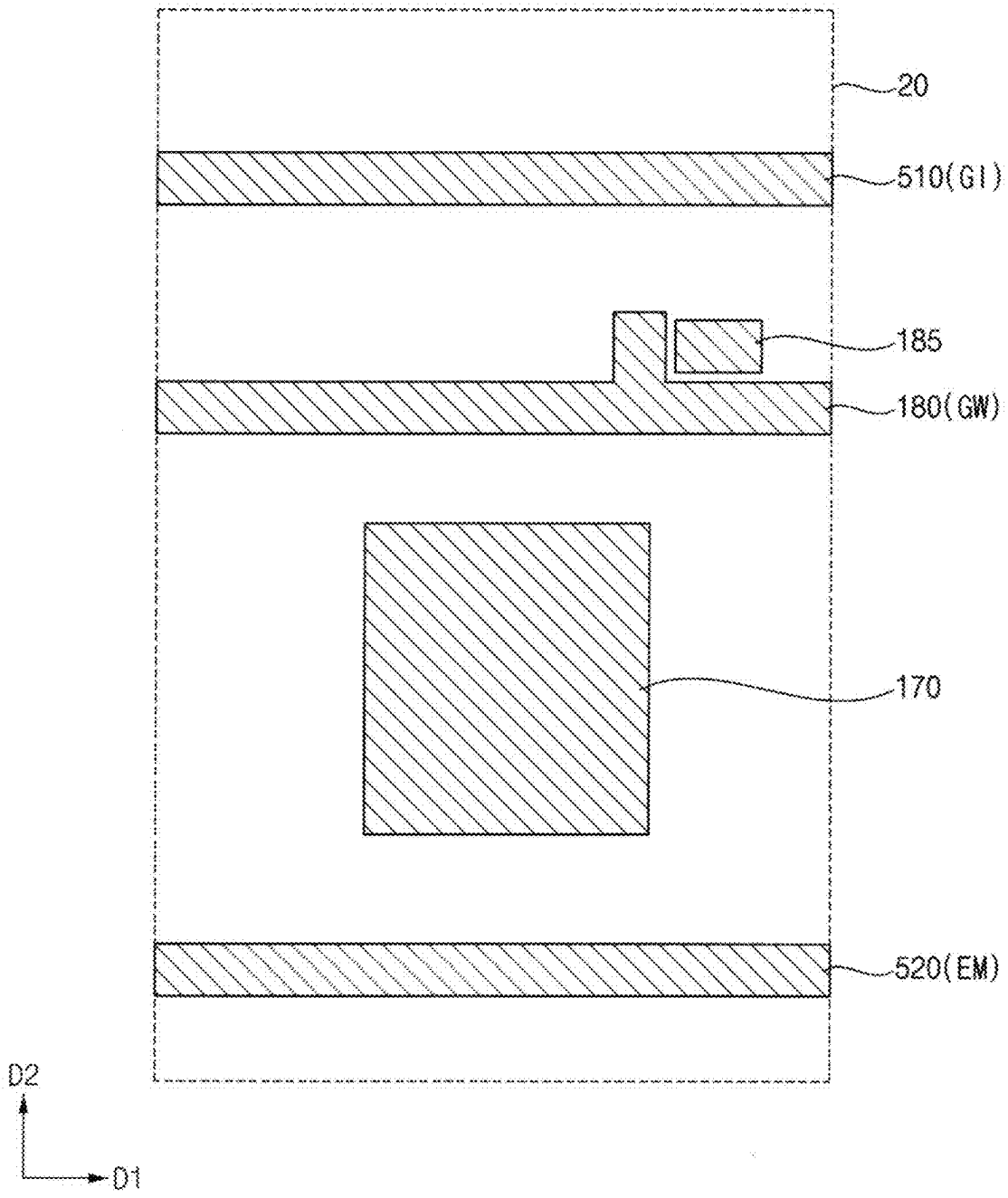

FIG. 5

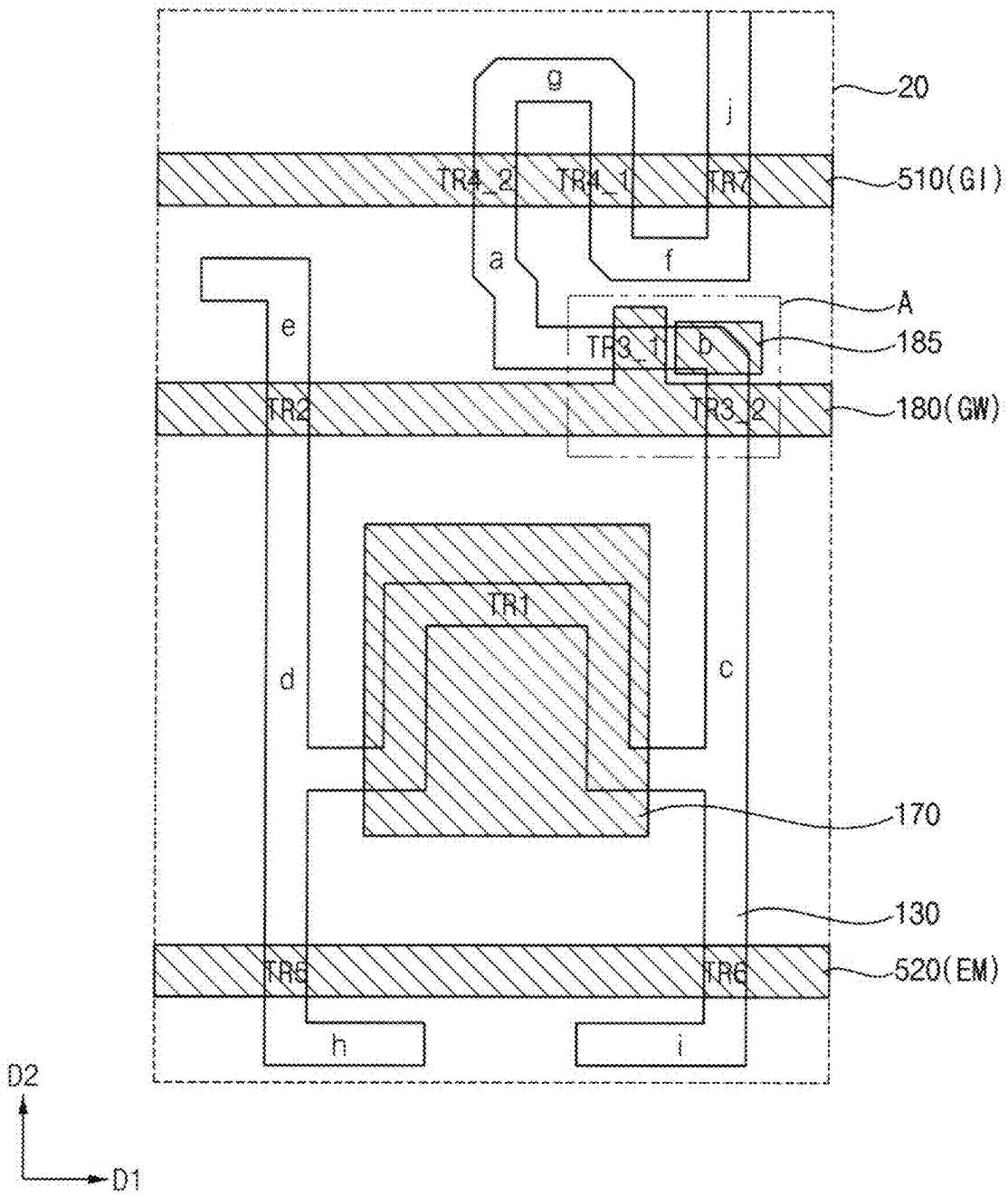
20
g
j
TR4_2
TR4_1
TR7
510(GI)
a
f
A
e
TR3_1
b
185
TR2
TR3_2
180(GW)
TR1
d
c
170
130
TR5
TR6
520(EM)
h
i
D2
D1

FIG. 6

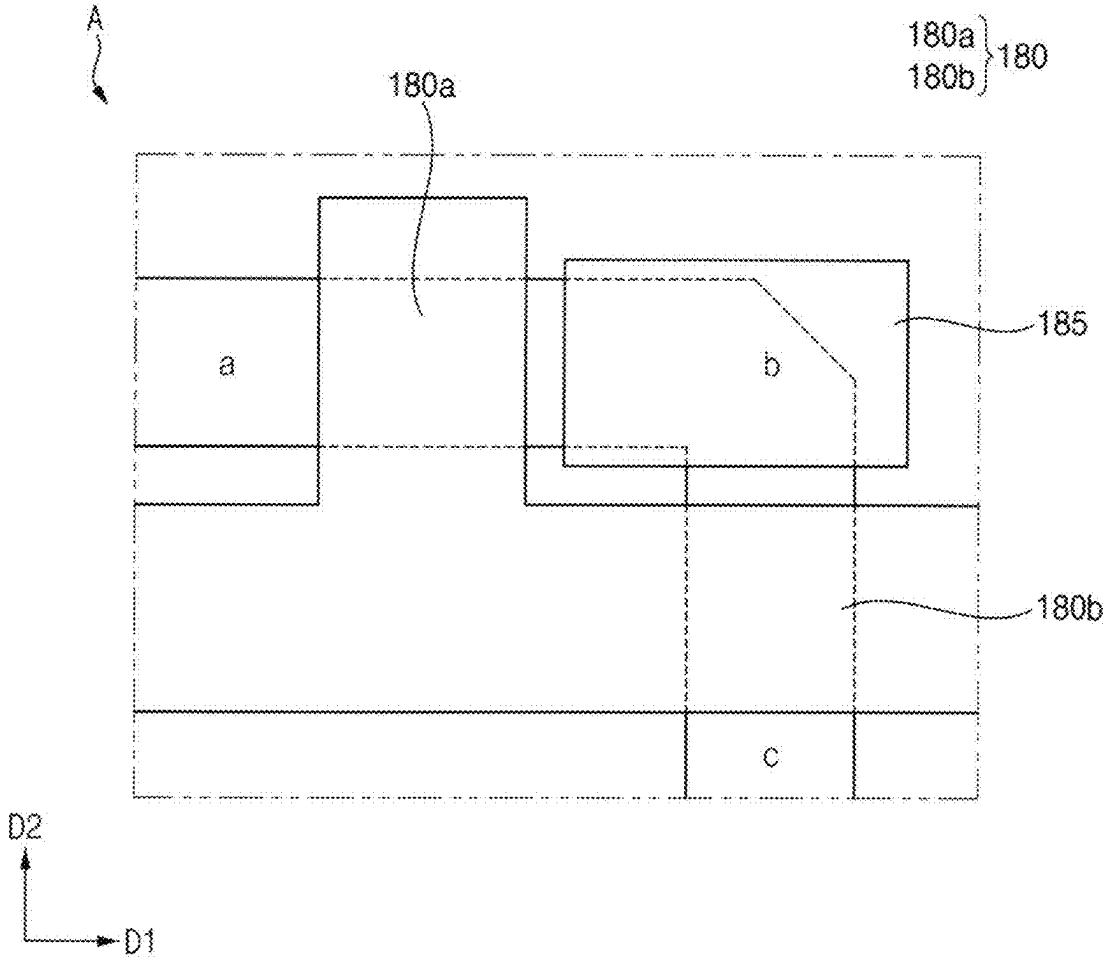

FIG. 7

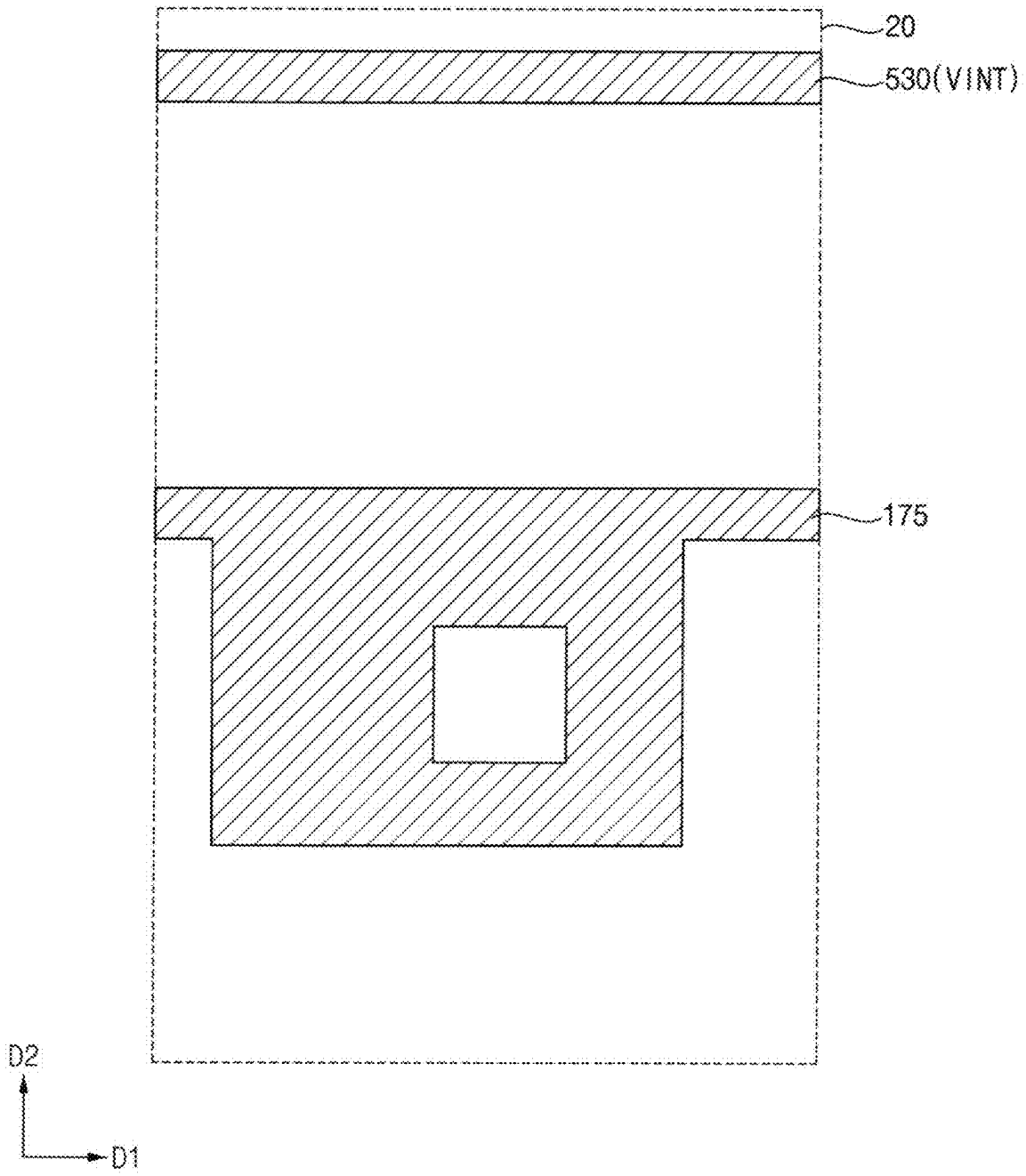

FIG. 8

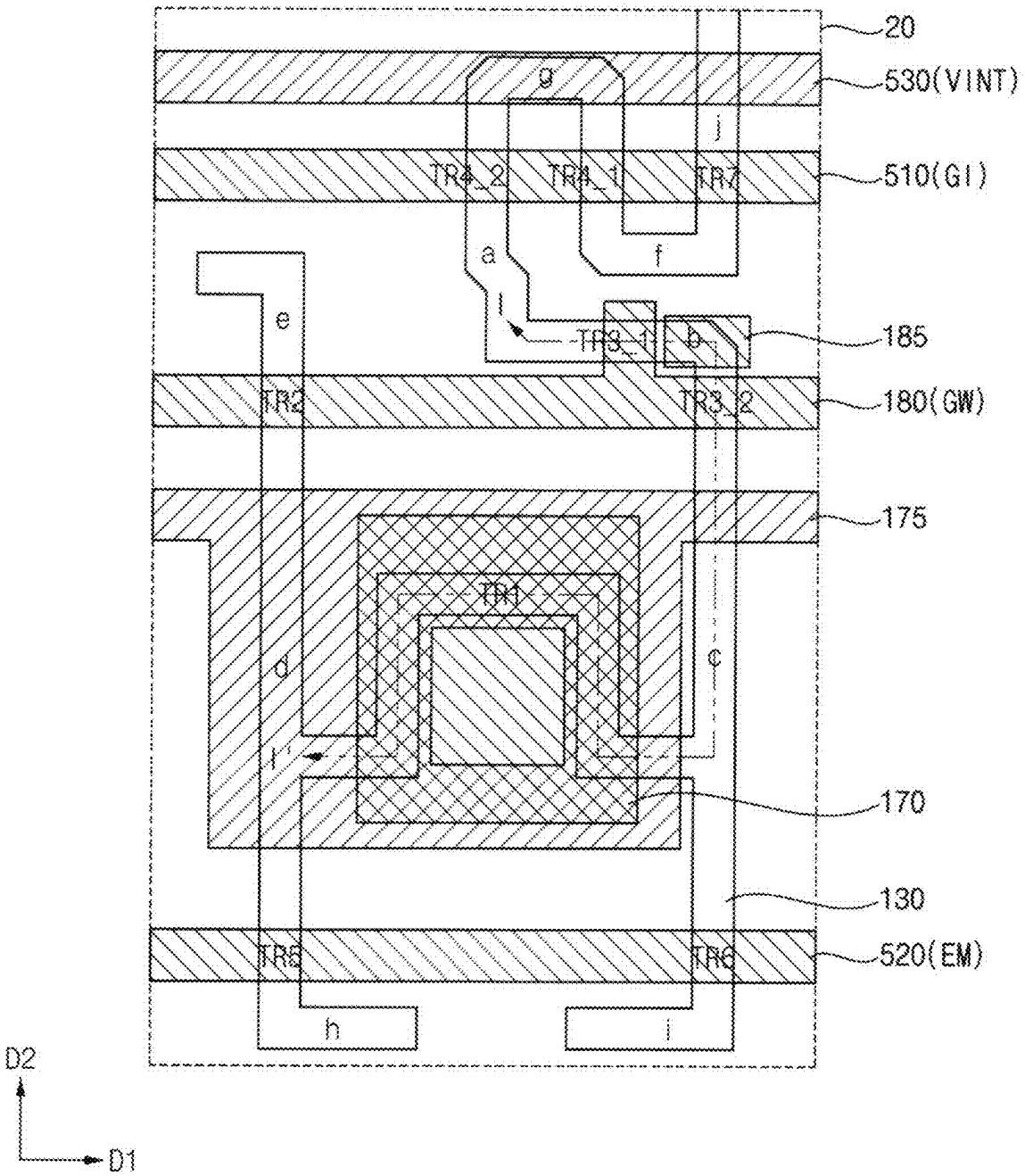
20
530(VINT)
g
j
TR4_2
TR4_1
TR7
510(GI)
a
f
e
l
TR3_1
b
185
TR2
TR3_2
180(GW)
175
TR1
d
c
170
130
TR5
TR6
520(EM)
h
i
D2
D1

FIG. 9

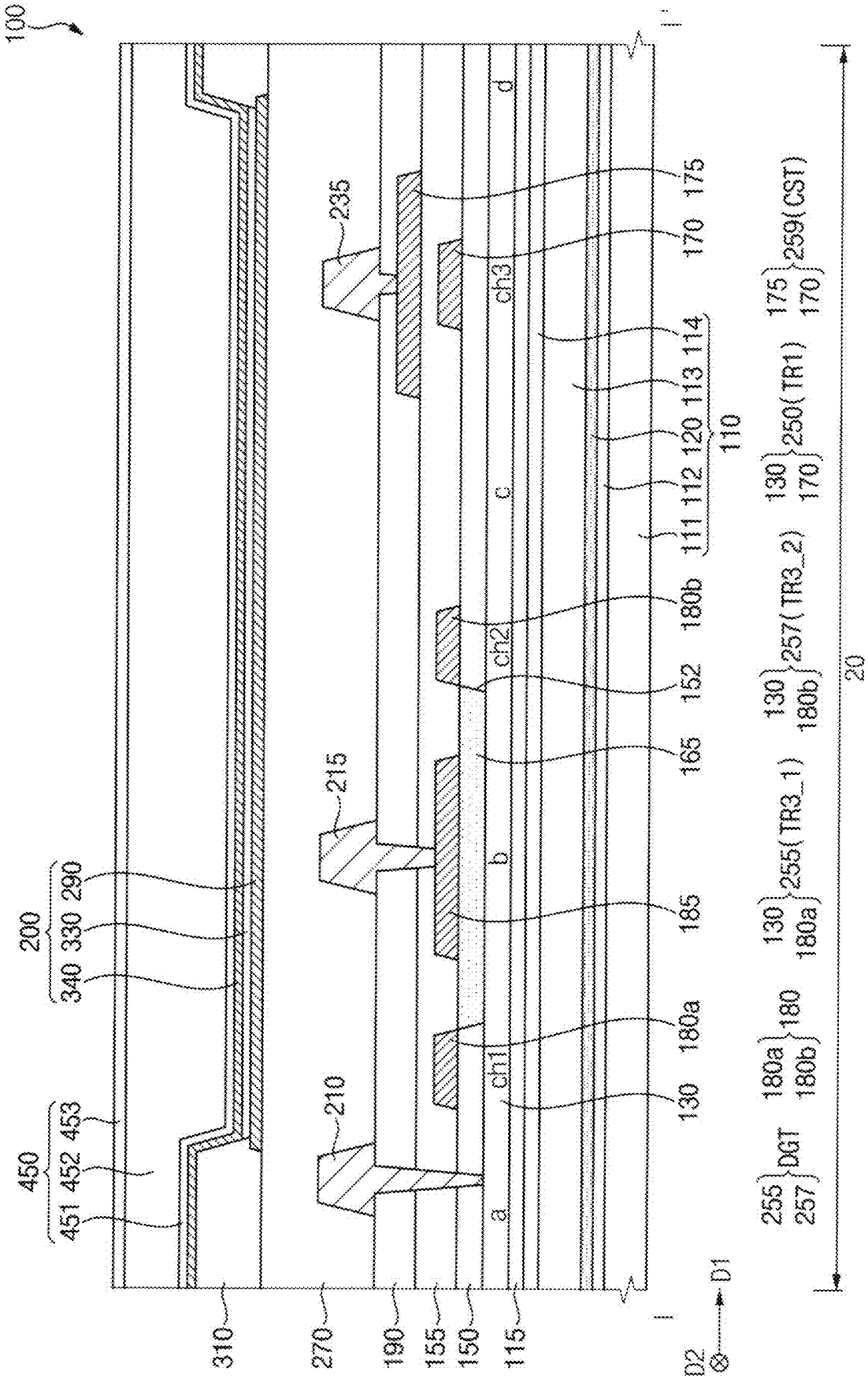
100
I
I'
310
270
190
155
150
115
D1
D2
450
451
452
453
200
340
330
290
210
215
235
a
b
c
d
ch1
ch2
ch3
130
180a
185
165
152
180b
111
112
120
113
114
110
170
175
255
257
DGT
180a
180b
180
130
180a
255(TR3_1)
130
180b
257(TR3_2)
130
170
250(TR1)
175
170
259(CST)
20

FIG. 10

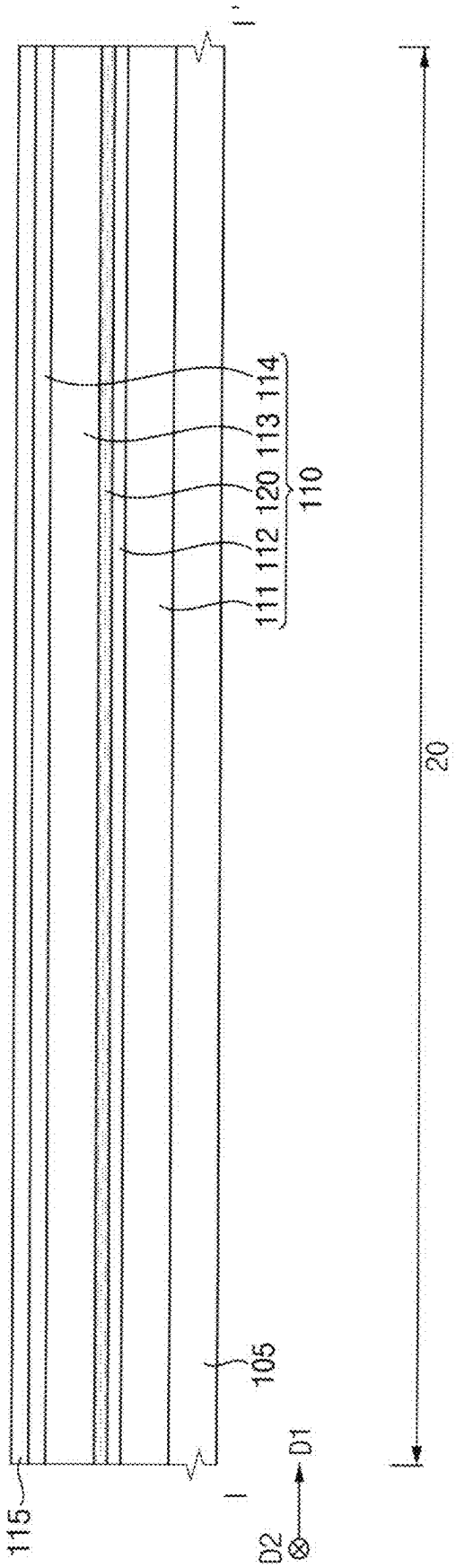

FIG. 11

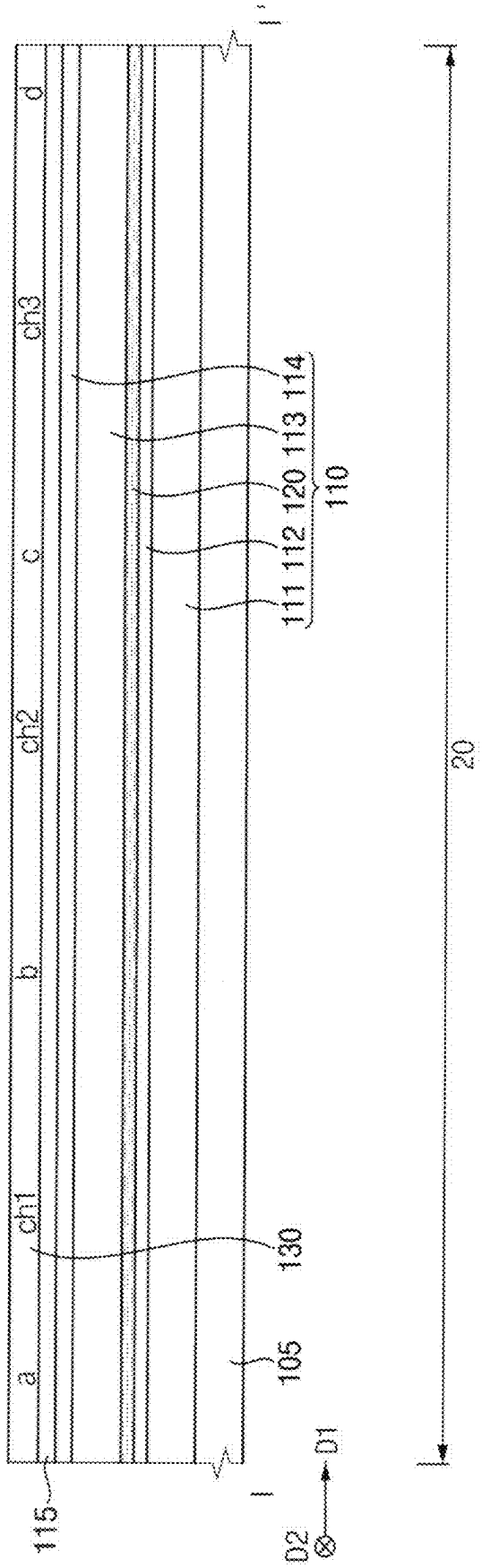

FIG. 12

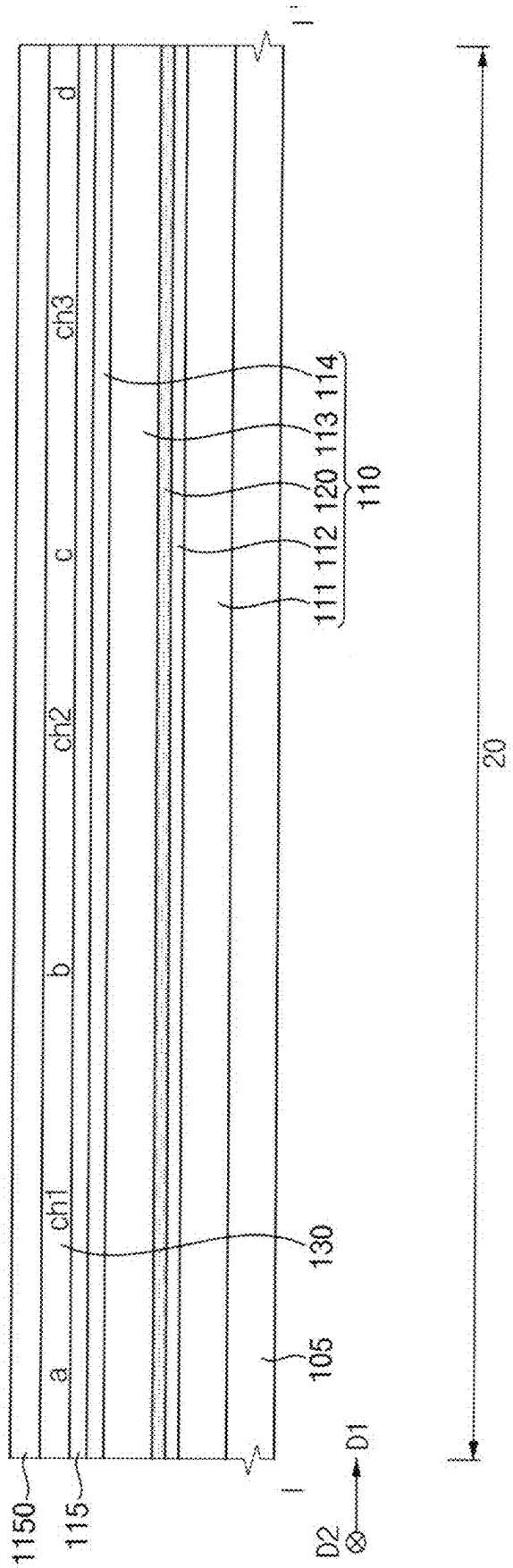
I'
d
ch3
c
ch2
b
ch1
a
114
113
120
112
111
110
130
105
20
1150
115
I
D1
D2

FIG. 13

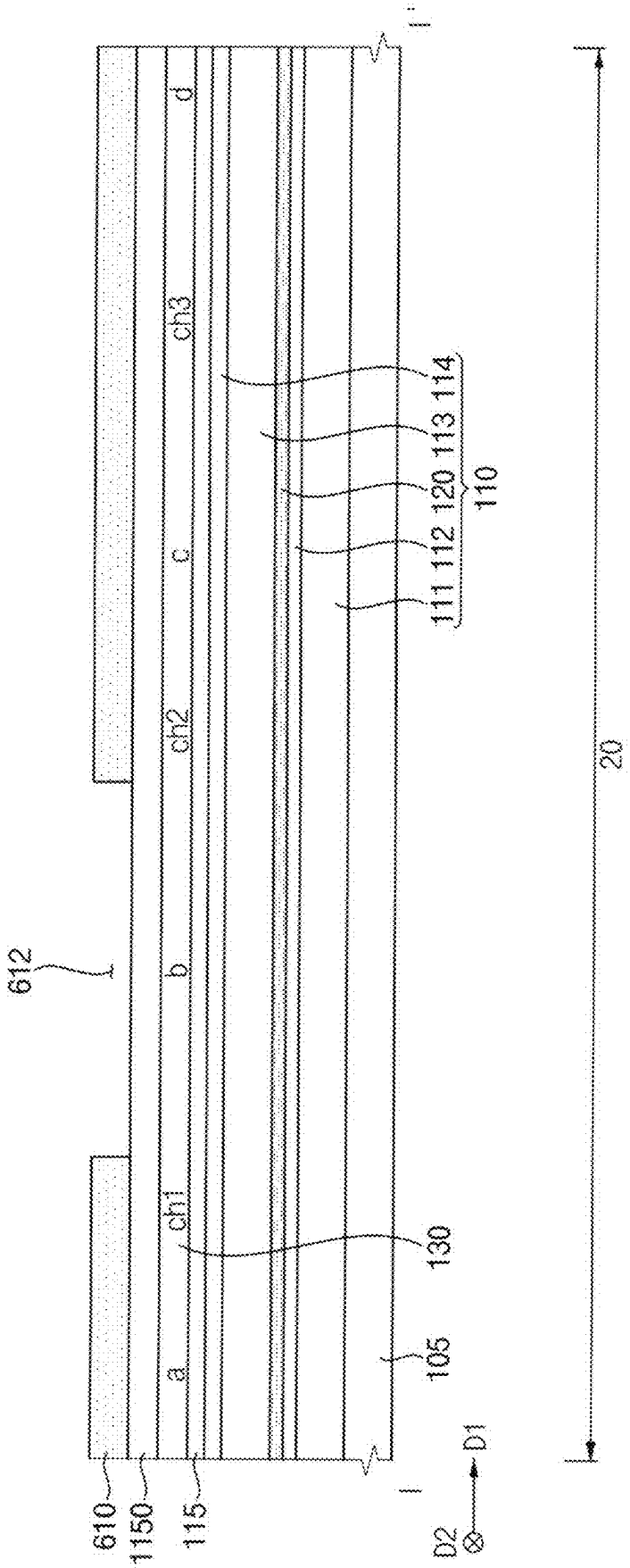
610
1150
115
612
a
ch1
b
ch2
c
ch3
d
130
105
111
112
120
113
114
110
20
D1
D2
I
I'

FIG. 14

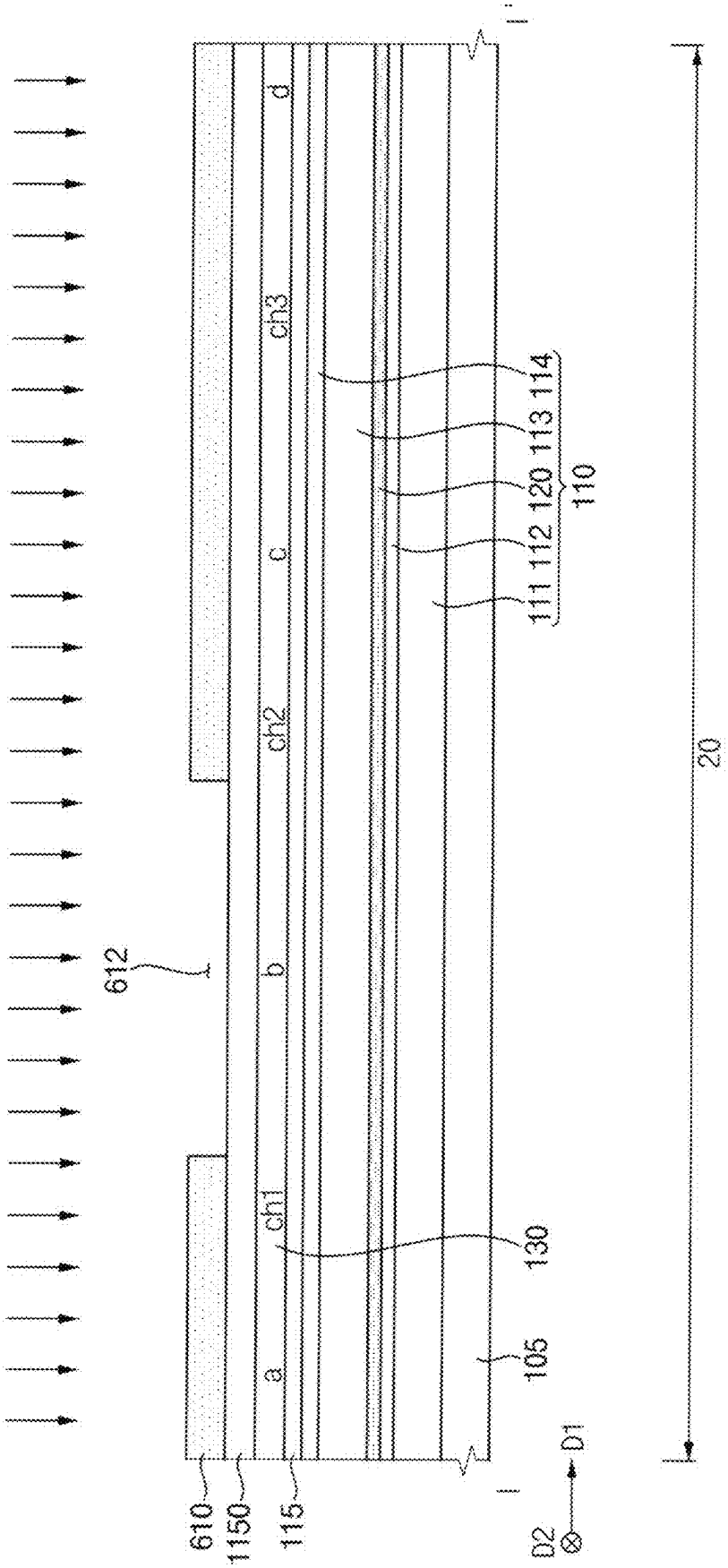
610
1150
115
a
ch1
b
ch2
c
ch3
d
612
130
105
111
112
120
113
114
110
20
D1
D2
I
I'

FIG. 15

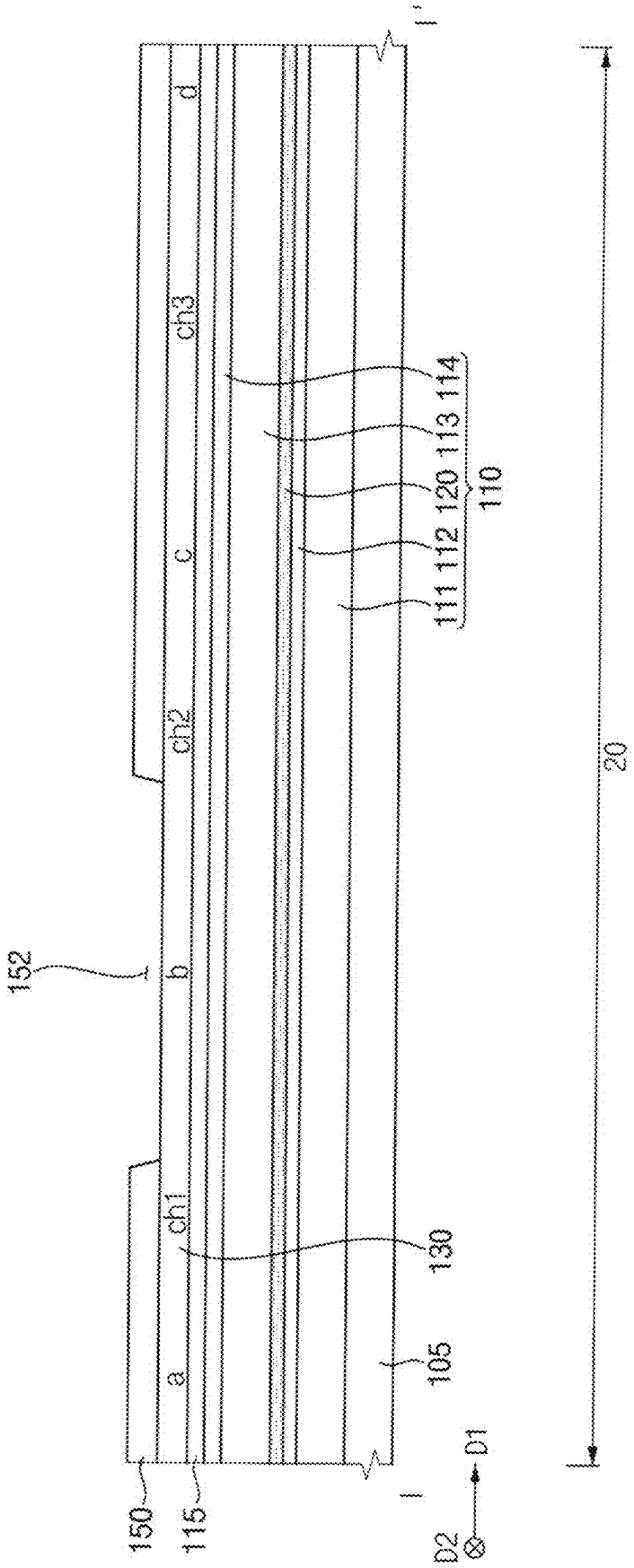
I'
d
ch3
114
113
120
110
112
111
c
ch2
20
152
b
ch1
130
a
105
150
115
I
D1
D2

FIG. 16

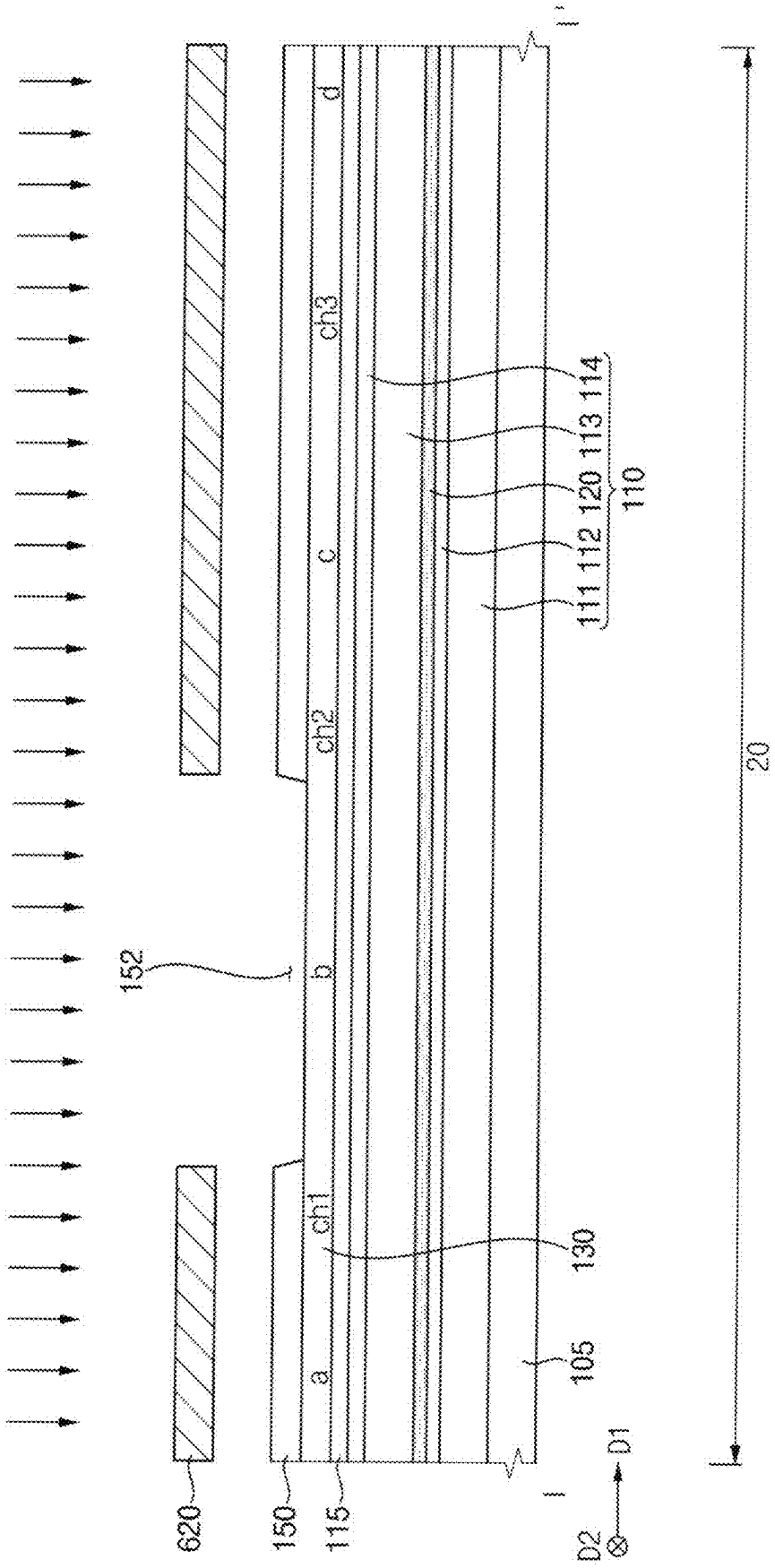

620
150
115
a
ch1
b
ch2
c
ch3
d
152
130
105
111
112
120
113
114
110
20
I
I'
D1
D2

FIG. 17

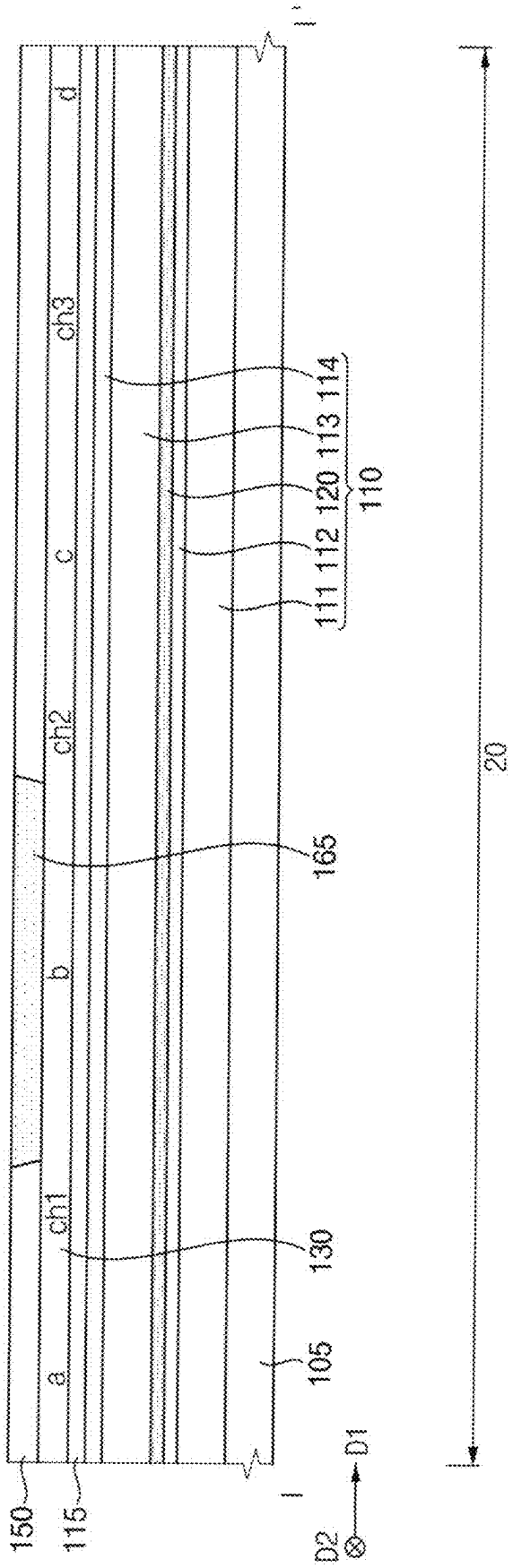
I'
d
ch3
114
113
120
110
c
112
111
ch2
20
165
b
ch1
130
a
105
150
115
I
D1
D2

FIG. 18

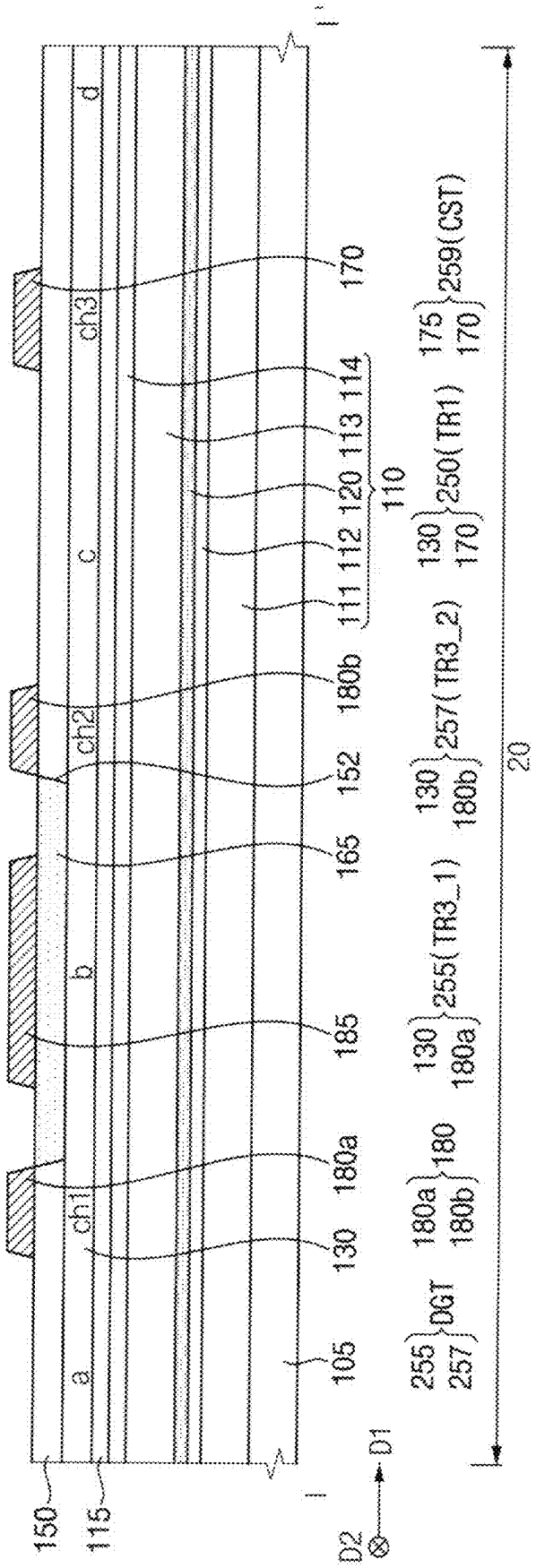
I
I'
150
115
D2
D1
a
b
c
d
ch1
ch2
ch3
105
130
180a
185
165
152
180b
111
112
120
113
114
170
255
257
DGT
180a
180b
180
130
180a
255(TR3_1)
130
180b
257(TR3_2)
110
130
170
250(TR1)
175
170
259(CST)
20

FIG. 19

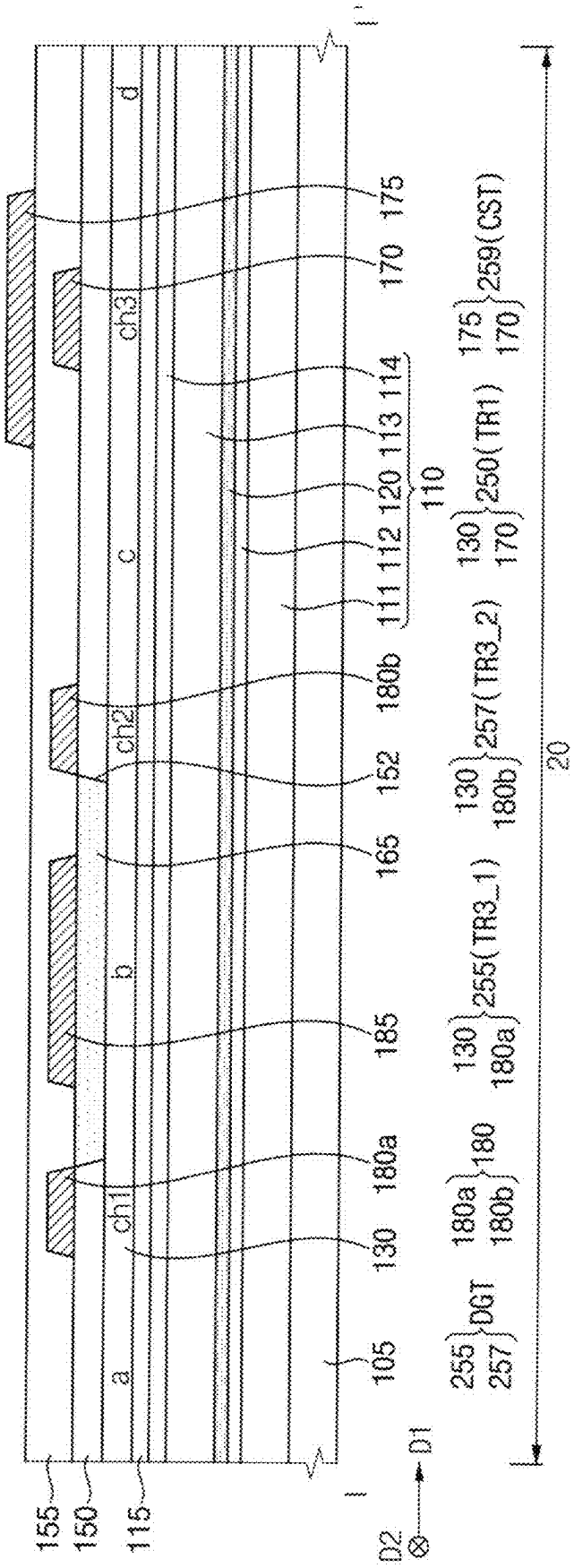

155
150
115
a
b
c
d
ch1
ch2
ch3
105
130
180a
185
165
152
180b
111
112
120
113
114
110
170
175
255
257
DGT
180a
180b
180
130
180a
255(TR3_1)
130
180b
257(TR3_2)
130
170
250(TR1)
175
170
259(CST)
20
D1
D2
I
I'

FIG. 20

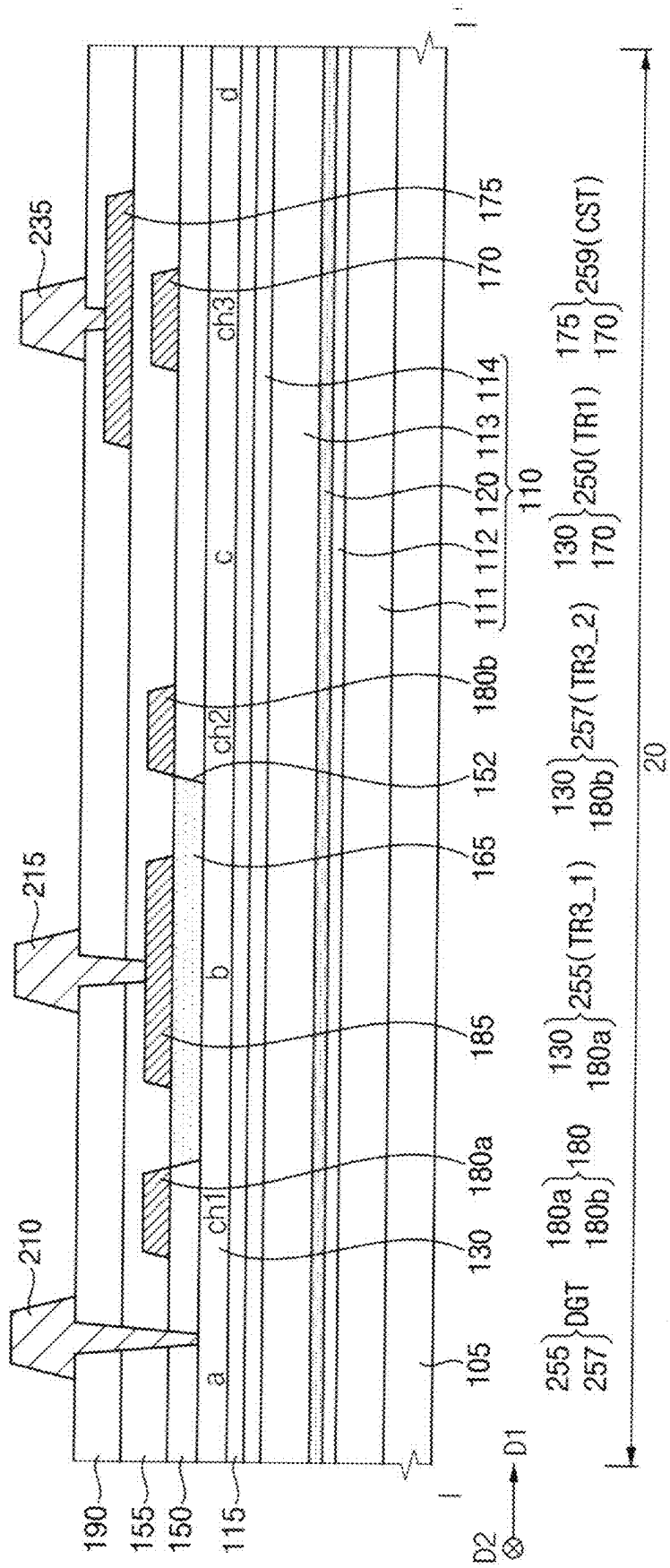
235
215
210
190
155
150
115
a
b
c
d
ch1
ch2
ch3
105
130
180a
185
165
152
180b
111
112
120
113
114
110
170
175
175
170
259(CST)
250(TR1)
130
170
257(TR3_2)
130
180b
255(TR3_1)
130
180a
180
180a
180b
DGT
255
257
20
D1
D2
I
I'

FIG. 21

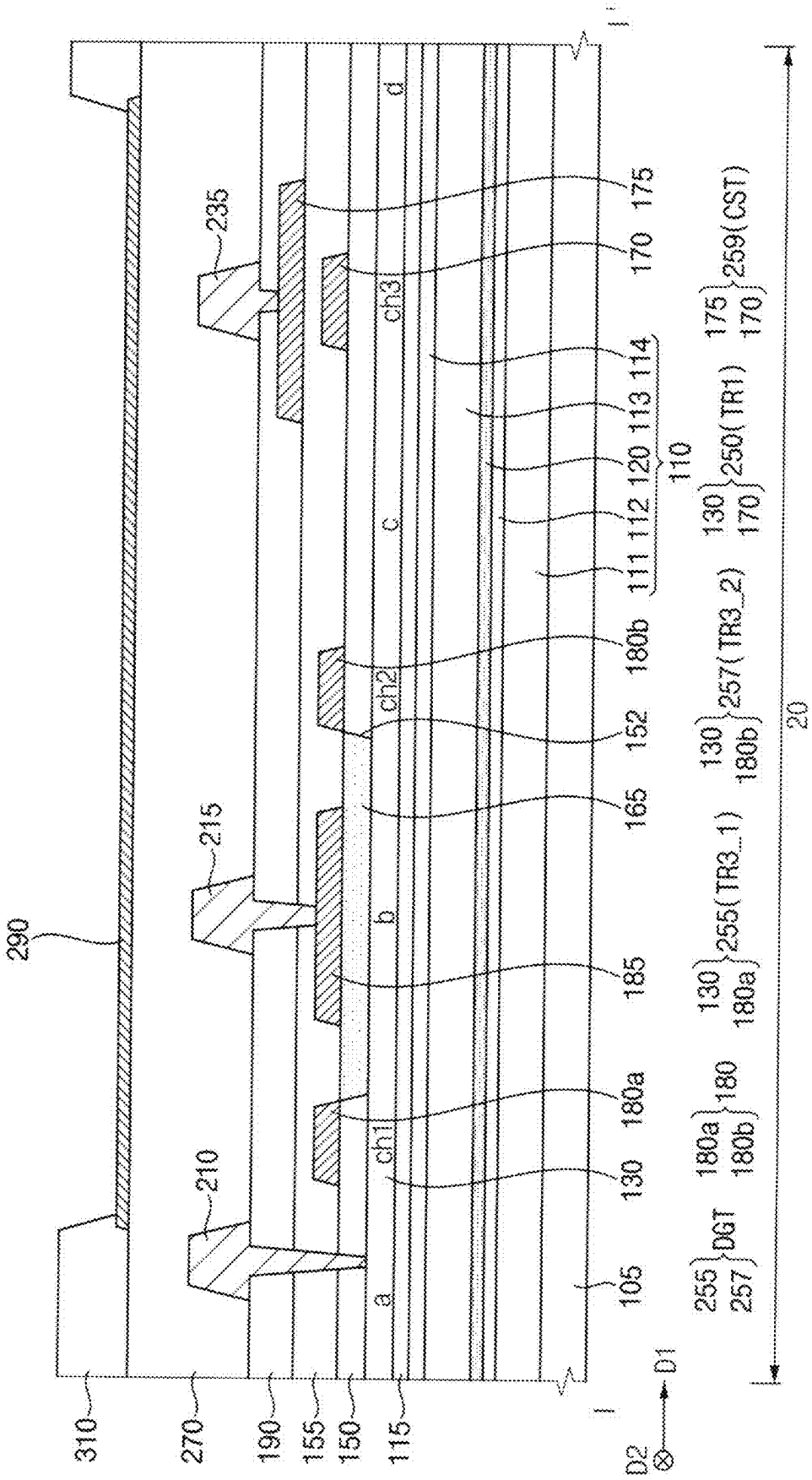
290
235
215
210
310
270
190
155
150
115
105
a
b
c
d
ch1
ch2
ch3
130
180a
185
165
152
180b
111
112
120
113
114
110
170
175
255
257
DGT
180a
180b
180
130
180a
255(TR3_1)
130
180b
257(TR3_2)
130
170
250(TR1)
175
170
259(CST)
20
D1
D2

FIG. 22

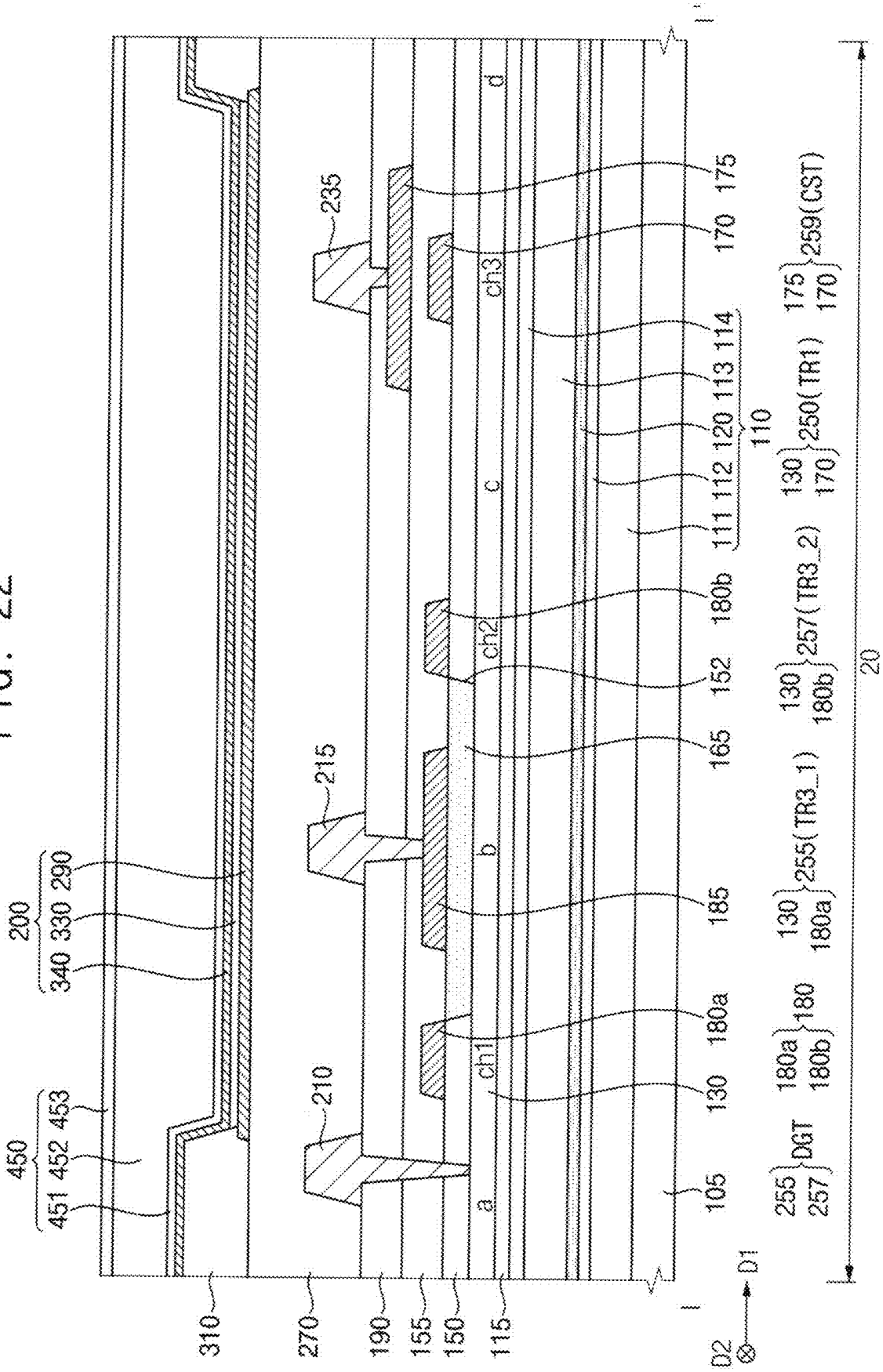

450
451
452
453
200
340
330
290
310
270
190
155
150
115
210
215
235
a
b
c
d
ch1
ch2
ch3
105
130
180a
185
165
152
180b
111
112
120
113
114
110
170
175
255
257
DGT
180a
180b
180
130
180a
255(TR3_1)
130
180b
257(TR3_2)
130
170
250(TR1)
175
170
259(CST)
20
D1
D2
I
I'

FIG. 23

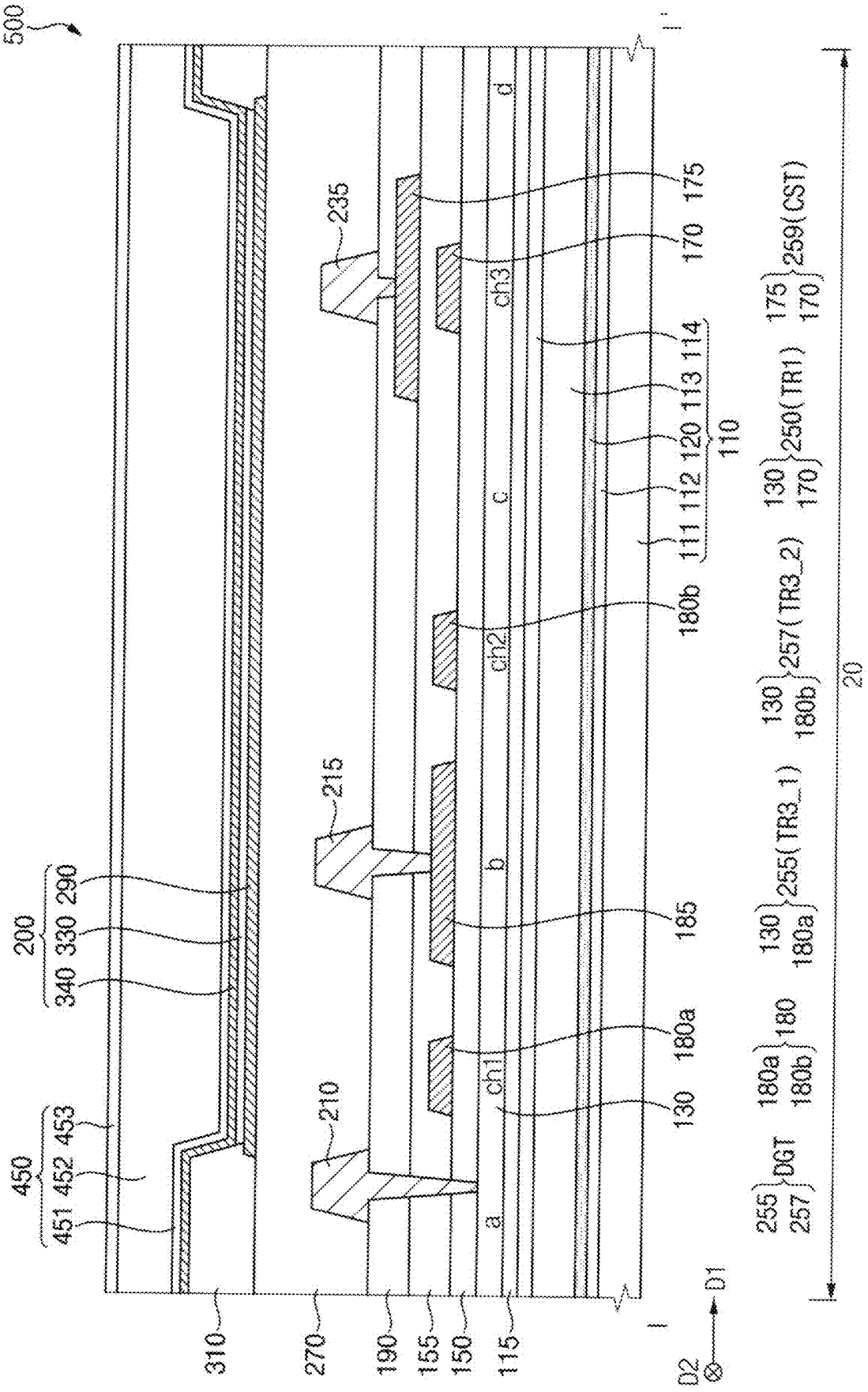
500
I'
I
D1
D2
310
270
190
155
150
115
450
451
452
453
200
340
330
290
210
215
235
a
b
c
d
ch1
ch2
ch3
130
180a
185
180b
111
112
120
113
114
110
170
175
255
257
DGT
180a
180b
180
130
180a
255(TR3_1)
130
180b
257(TR3_2)
130
170
250(TR1)
175
170
259(CST)
20

FIG. 24

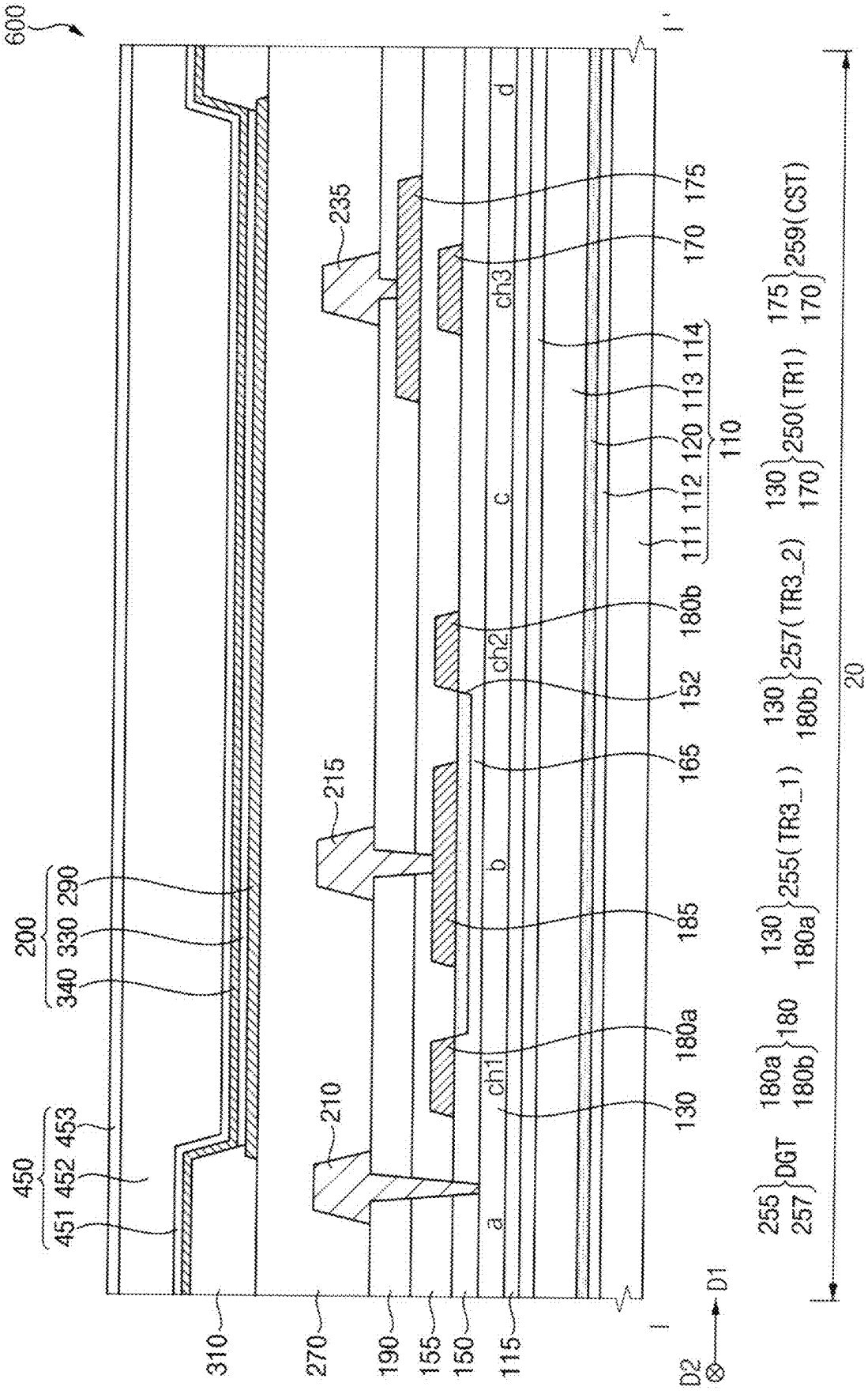
600
I'
d
c
b
a
ch1
ch2
ch3
235
215
210
175
170
114
113
120
110
112
111
180b
152
165
185
180a
130
290
330
340
200
453
452
451
450
310
270
190
155
150
115
I
D2
D1
175
170
259(CST)
250(TR1)
130
170
257(TR3_2)
130
180b
255(TR3_1)
130
180a
180
180a
180b
DGT
255
257
20

FIG. 25

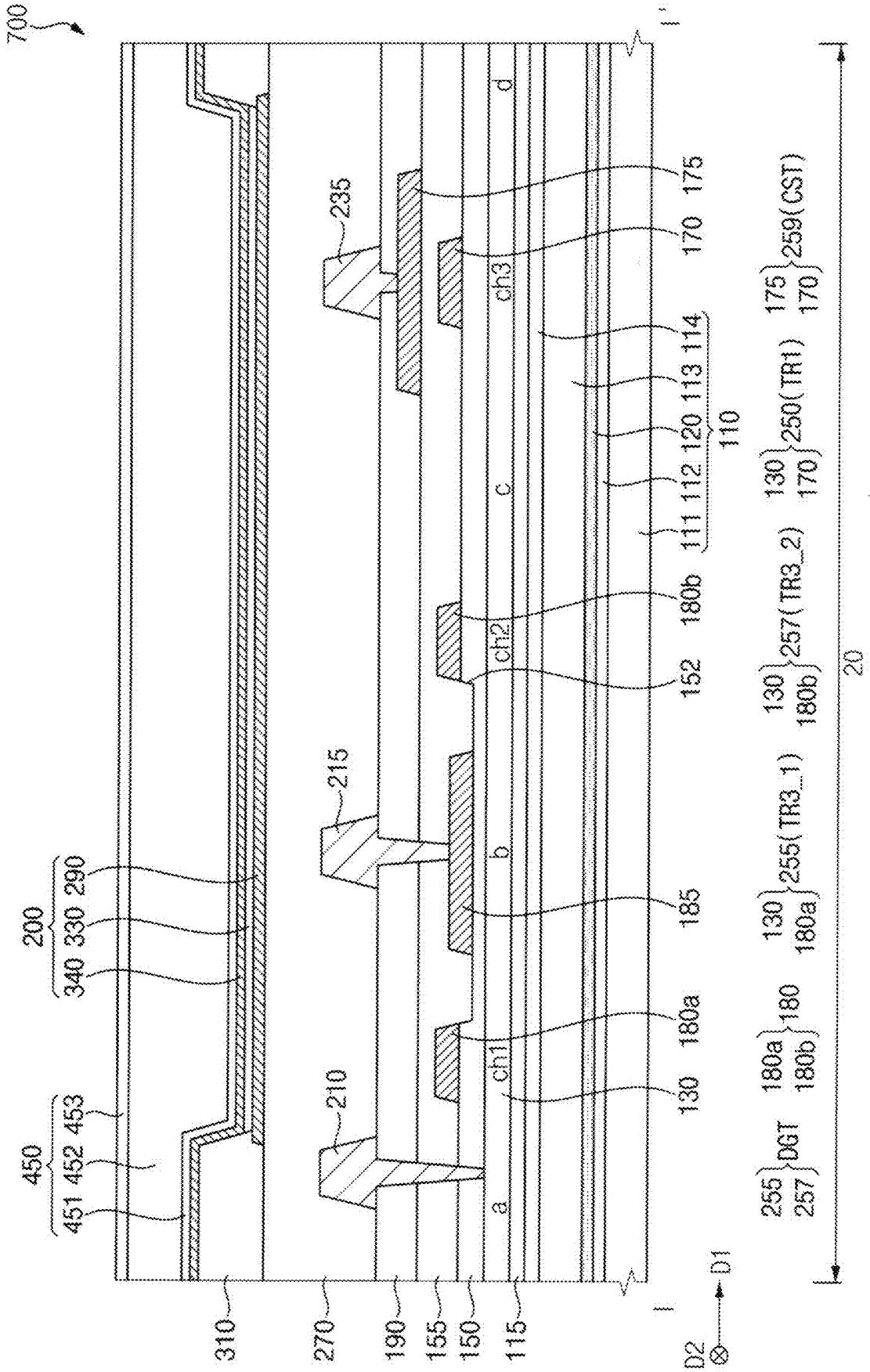
700
I'
I
D1
D2
310
270
190
155
150
115
450
451
452
453
200
340
330
290
210
215
235
a
b
c
d
ch1
ch2
ch3
130
180a
185
152
180b
111
112
120
113
114
110
170
175
255
257
DGT
180a
180b
180
130
180a
255(TR3_1)
130
180b
257(TR3_2)
130
170
250(TR1)
175
170
259(CST)
20

FIG. 26

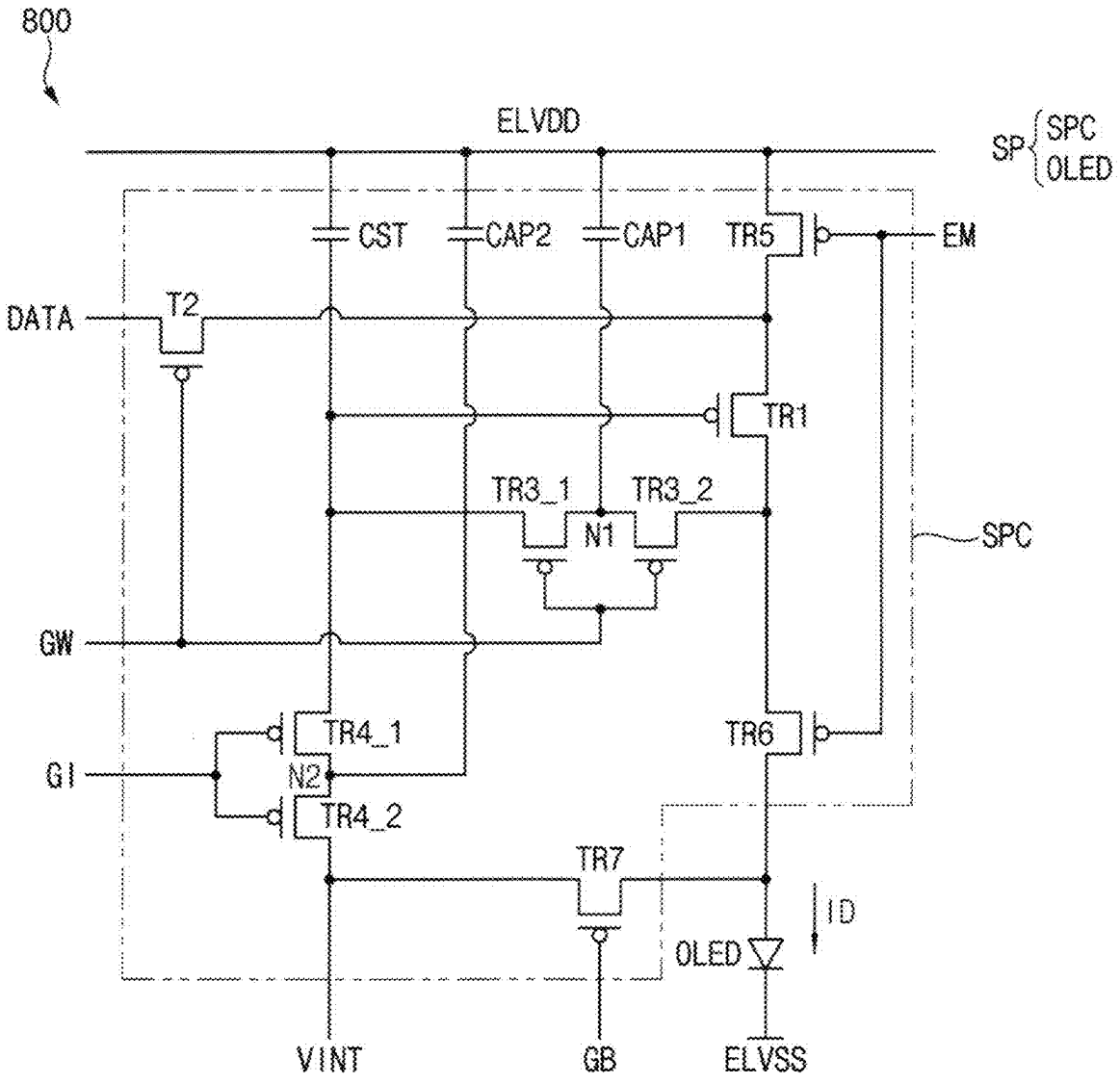
800
ELVDD
SP
SPC
OLED
CST
CAP2
CAP1
TR5
EM
DATA
T2
TR1
TR3_1
TR3_2
N1
SPC
GW
TR4_1
TR6
GI
N2
TR4_2
TR7
ID
OLED
VINT
GB
ELVSS

DISPLAY DEVICE AND METHOD OF MANUFACTURING DISPLAY DEVICE

[0001] This application is a divisional of U.S. patent application Ser. No. 17/568,242, filed on Jan. 4, 2022, which claims priority to Korean Patent Application No. 10-2021-0052410, filed on Apr. 22, 2021, and all the benefits accruing therefrom under 35 U.S.C. § 119, the content of which in its entirety is herein incorporated by reference.

BACKGROUND

1. Field

[0002] Embodiments relate generally to a display device and a method of manufacturing a display device. More particularly, embodiments of the invention relate to a display device including a dual gate transistor and a method of manufacturing a display device including a dual gate transistor.

2. Description of the Related Art

[0003] Flat panel display devices are used as display devices for replacing a cathode ray tube display device due to lightweight and thin characteristics thereof. As representative examples of such flat panel display devices, there are a liquid crystal display device and an organic light emitting diode display device.

[0004] The display device may include at least one driving transistor, at least one switching transistor, and at least one storage capacitor. In this case, the driving transistor may have a relatively long channel region to ensure a driving range, and the switching transistor may have a relatively short channel region to reduce a charging time. In order for the display device to be driven at a low frequency, a switching transistor connected to a first terminal of the driving transistor is desired to reduce a leakage current. In this case, a data signal may be provided to a second terminal of the driving transistor. In addition, a first terminal of the switching transistor may be connected to a gate terminal of the driving transistor and the storage capacitor, and a second terminal of the switching transistor may be connected to the first terminal of the driving transistor. In order to reduce the leakage current, the switching transistor may be implemented as a dual gate transistor or a triple gate transistor.

SUMMARY

[0005] Embodiments provide a display device including a dual gate transistor.

[0006] Embodiments provide a method of manufacturing a display device including a dual gate transistor.

[0007] In an embodiment of the invention, a display device includes a substrate, an active layer, a first gate electrode, a first gate insulating layer, an insulating pattern, a gate electrode pattern, and a light emitting structure. The substrate includes a sub-pixel area. The active layer is disposed in the sub-pixel area on the substrate, and includes first, second, and third regions, a first channel region disposed between the first and second regions, and a second channel region disposed between the second and third regions. The first gate electrode is disposed in the first and second channel regions on the active layer, and constitutes a dual gate transistor together with the first and second regions and the first channel region and together with the second and third regions and the second channel region. The first gate insulating layer is disposed between the active layer and the first gate electrode, and defines an opening that exposes the second region of the active layer. The insulating pattern is disposed in the opening. The gate electrode pattern contacts a first surface of the insulating pattern opposite to a second surface of the insulating pattern facing the substrate, and is spaced apart from the first gate electrode. The gate electrode pattern constitutes a capacitor together with the second region.

[0008] The light emitting structure is disposed on the dual gate transistor and the gate electrode pattern.

[0009] In an embodiment, the dual gate transistor may be connected in series.

[0010] In an embodiment, a dielectric constant of the insulating pattern may be greater than a dielectric constant of the first gate insulating layer.

[0011] In an embodiment, the display device may further include a second gate insulating layer, an inter-insulating layer, and a connection pattern. The second gate insulating layer may be disposed on the first gate electrode and the gate electrode pattern. The inter-insulating layer may be disposed on the second gate insulating layer. The connection pattern may be disposed on the inter-insulating layer, and a first power supply voltage may be applied to the connection pattern.

[0012] In an embodiment, the connection pattern may be connected to the gate electrode pattern through a contact hole defined in the second gate insulating layer and the inter-insulating layer.

[0013] In an embodiment, a gate signal may be applied to the first gate electrode, and a first power supply voltage may be provided to the gate electrode pattern.

[0014] In an embodiment, the active layer may further include a fourth region and a third channel region disposed between the third and fourth regions. The he first region, the first channel region, the second region, the second channel region, the third region, the third channel region, and the fourth region may be sequentially arranged.

[0015] In an embodiment, the display device may further include a second gate electrode disposed in the third channel region on the active layer. The second gate electrode may constitute a driving transistor together with the third and fourth regions and the third channel region.

[0016] In an embodiment, the first gate electrode, the gate electrode pattern, and the second gate electrode may be disposed in a same layer.

[0017] In an embodiment, the display device may further include a third gate electrode, an inter-insulating layer, and a power supply wire. The third gate electrode may be disposed on the second gate electrode, and may constitute a storage capacitor together with the second gate electrode. The inter-insulating layer may be disposed on the third gate electrode. The power supply wire may be disposed on the inter-insulating layer, and a first power supply voltage is applied to power supply wire. The power supply wire may be connected to the third gate electrode through a contact hole defined in the inter-insulating layer. The first power supply voltage may be provided to the third gate electrode.

[0018] In an embodiment, the light emitting structure may include a first electrode, a light emitting layer disposed on the lower electrode, and a second electrode to which a second power supply voltage is applied.

[0019] In an embodiment of the invention, a display device includes a substrate, an active layer, a first gate

electrode, a first gate insulating layer, a gate electrode pattern, and a light emitting structure. The substrate includes a sub-pixel area. The active layer is disposed in the sub-pixel area on the substrate, and includes first, second, and third regions, a first channel region disposed between the first and second regions, and a second channel region disposed between the second and third regions. The first gate electrode is disposed in the first and second channel regions on the active layer, and constitutes a dual gate transistor together with the first and second regions and the first channel region and together with the second and third regions and the second channel region. The first gate insulating layer is disposed between the active layer and the first gate electrode, and a groove is defined in the first gate insulating layer in the second region of the active layer. The gate electrode pattern overlaps the groove, and constitutes a capacitor together with the second region. The light emitting structure is disposed on the dual gate transistor and the gate electrode pattern.

[0020] In an embodiment, the gate electrode pattern may be disposed inside the groove, and may contact the first gate insulating layer.

[0021] In an embodiment, the display device may further include an insulating pattern disposed in the groove.

[0022] In an embodiment, the gate electrode pattern may contact a first surface of the insulating pattern opposite to a second surface of the insulating pattern facing the substrate.

[0023] In an embodiment, a method of manufacturing a display device is provided as follows. A substrate including a sub-pixel area is formed or provided. An active layer including first, second, third, and fourth regions, a first channel region disposed between the first and second regions, a second channel region disposed between the second and third regions, and a third channel region disposed between the third and fourth regions is formed or provided in the sub-pixel area on the substrate. A first gate insulating layer defining an opening that exposes the second region of the active layer is formed or provided. An insulating pattern is formed or provided in the opening. A first gate electrode in the first and second channel regions and a gate electrode pattern in the second region are simultaneously formed or disposed on the first gate insulating layer. A light emitting structure is formed or disposed on the first gate electrode and the gate electrode pattern.

[0024] In an embodiment, the forming of the first gate insulating layer defining the opening that exposes the second region of the active layer may include forming a preliminary first gate insulating layer on the active layer, forming a photoresist defining an opening that exposes the second region on the preliminary first gate insulating layer, and performing an etching process over the entire substrate.

[0025] In an embodiment, the forming of the insulating pattern in the opening may include arranging a mask defining an opening that overlaps the second region on the first gate insulating layer and performing a deposition process over of the entire substrate.

[0026] In an embodiment, a dielectric constant of the insulating pattern may be greater than a dielectric constant of the first gate insulating layer.

[0027] In an embodiment, the method may further include forming a second gate electrode in the third channel region on the active layer, which is performed simultaneously with the simultaneously forming of the first gate electrode in the first and second channel regions and the gate electrode pattern in the second region on the first gate insulating layer. The first gate electrode, the gate electrode pattern, and the second gate electrode may be disposed in a same layer.

[0028] Since the display device in the embodiments of the invention includes the gate electrode pattern disposed in the same layer as the first gate electrode and the second gate electrode, the distance between the gate electrode pattern and the second region may be relatively reduced, and the capacitance of the capacitor may be relatively increased. In addition, since the insulating pattern having a relatively high dielectric constant is interposed between the gate electrode pattern and the second region b, the capacitance of the capacitor may be further increased. Accordingly, the leakage current may be significantly reduced in the second region b, and the display device may be driven at a low frequency.

[0029] According to the method of manufacturing the display device of the embodiments of the invention, since the gate electrode pattern, the first gate electrode, and the second gate electrode are simultaneously formed or provided in the same process, a manufacturing cost of the display device may be relatively reduced.

BRIEF DESCRIPTION OF THE DRAWINGS

[0030] Embodiments may be understood in more detail from the following description taken in conjunction with the accompanying drawings.

[0031] FIG. **1** is a plan view showing an embodiment of a display device according to the invention.

[0032] FIG. **2** is a circuit diagram showing a sub-pixel disposed in a sub-pixel area of FIG. **1**.

[0033] FIGS. **3** to **8** are plan views for describing the display device of FIG. **1**.

[0034] FIG. **9** is a cross-sectional view taken along line I-I' of FIG. **8**.

[0035] FIGS. **10** to **22** are views showing an embodiment of a method of manufacturing a display device according to the invention.

[0036] FIG. **23** is a cross-sectional view showing an embodiment of a display device according to the invention.

[0037] FIG. **24** is a cross-sectional view showing an embodiment of a display device according to the invention.

[0038] FIG. **25** is a cross-sectional view showing an embodiment of a display device according to the invention.

[0039] FIG. **26** is a circuit diagram showing an embodiment of a display device according to the invention.

DETAILED DESCRIPTION

[0040] Hereinafter, display devices in embodiments of the invention and a method of manufacturing a display device in embodiments of the invention will be described in detail with reference to the accompanying drawings. In the accompanying drawings, same or similar reference numerals refer to the same or similar elements.

[0041] It will be understood that when an element is referred to as being "on" another

[0042] element, it can be directly on the other element or intervening elements may be therebetween. In contrast, when an element is referred to as being "directly on" another element, there are no intervening elements present.

[0043] It will be understood that, although the terms "first," "second," "third" etc. may be used herein to describe various elements, components, regions, layers and/or sections, these elements, components, regions, layers and/or

sections should not be limited by these terms. These terms are only used to distinguish one element, component, region, layer or section from another element, component, region, layer or section. Thus, "a first element," "component," "region," "layer" or "section" discussed below could be termed a second element, component, region, layer or section without departing from the teachings herein.

[0044] The terminology used herein is for the purpose of describing particular embodiments only and is not intended to be limiting. As used herein, the singular forms "a," "an," and "the" are intended to include the plural forms, including "at least one," unless the content clearly indicates otherwise. "Or" means "and/or." As used herein, the term "and/or" includes any and all combinations of one or more of the associated listed items. It will be further understood that the terms "comprises" and/or "comprising," or "includes" and/or "including" when used in this specification, specify the presence of stated features, regions, integers, steps, operations, elements, and/or components, but do not preclude the presence or addition of one or more other features, regions, integers, steps, operations, elements, components, and/or groups thereof.

[0045] Furthermore, relative terms, such as "lower" or "bottom" and "upper" or "top," may

[0046] be used herein to describe one element's relationship to another element as illustrated in the Figures. It will be understood that relative terms are intended to encompass different orientations of the device in addition to the orientation depicted in the Figures. In an embodiment, when the device in one of the figures is turned over, elements described as being on the "lower" side of other elements would then be oriented on "upper" sides of the other elements. The exemplary term "lower," can therefore, encompasses both an orientation of "lower" and "upper," depending on the particular orientation of the figure. Similarly, when the device in one of the figures is turned over, elements described as "below" or "beneath" other elements would then be oriented "above" the other elements. The exemplary terms "below" or "beneath" can, therefore, encompass both an orientation of above and below.

[0047] "About" or "approximately" as used herein is inclusive of the stated value and means within an acceptable range of deviation for the particular value as determined by one of ordinary skill in the art, considering the measurement in question and the error associated with measurement of the particular quantity (i.e., the limitations of the measurement system). The term "about" can mean within one or more standard deviations, or within ±30%, 20%, 10%, 5% of the stated value, for example.

[0048] Unless otherwise defined, all terms (including technical and scientific terms) used herein have the same meaning as commonly understood by one of ordinary skill in the art to which this invention belongs. It will be further understood that terms, such as those defined in commonly used dictionaries, should be interpreted as having a meaning that is consistent with their meaning in the context of the relevant art and the invention, and will not be interpreted in an idealized or overly formal sense unless expressly so defined herein.

[0049] FIG. **1** is a plan view showing an embodiment of a display device according to the invention.

[0050] Referring to FIG. **1**, a display device **100** may include a display area **10**, and the display area **10** may include a plurality of sub-pixel areas **20**. The sub-pixel areas **20** may be arranged in a first direction D**1**, which is parallel to a top surface of the display device **100**, and a second direction D**2**, which is substantially perpendicular to the first direction D**1**.

[0051] Sub-pixels (e.g., a sub-pixel SP of FIG. **2**) may be disposed in the sub-pixel areas **20**, respectively. Each of the sub-pixels may include a sub-pixel circuit (e.g., a sub-pixel circuit SPC of FIG. **2**) and an organic light emitting diode (e.g., an organic light emitting diode OLED of FIG. **2**). In this case, the organic light emitting diode may be disposed on the sub-pixel circuit. An image may be displayed in the display area **10** through the sub-pixels.

[0052] In an embodiment, the sub-pixels may include first, second, and third sub-pixels, for example. In an embodiment, the first sub-pixel may include a first organic light emitting diode for emitting a red light and a first sub-pixel circuit, the second sub-pixel may include a second organic light emitting diode for emitting a green light and a second sub-pixel circuit, and the third sub-pixel may include a third organic light emitting diode for emitting a blue light and a third sub-pixel circuit.

[0053] In an embodiment, the first organic light emitting diode may overlap the first sub-pixel circuit, the second organic light emitting diode may overlap the second sub-pixel circuit, and the third organic light emitting diode may overlap the third sub-pixel circuit. In some embodiments, the first organic light emitting diode may overlap a portion of the first sub-pixel circuit and a portion of a sub-pixel circuit other than the first sub-pixel circuit, the second organic light emitting diode may overlap a portion of the second sub-pixel circuit and a portion of a sub-pixel circuit other than the second sub-pixel circuit, and the third organic light emitting diode may overlap a portion of the third sub-pixel circuit and a portion of a sub-pixel circuit other than the third sub-pixel circuit. In an embodiment, the first to third organic light emitting diodes may be arranged by an RGB stripe scheme in which rectangles having the same size as each other are sequentially arranged, an S-stripe scheme including a blue organic light emitting diode having a relatively large area, a WRGB scheme further including a white organic light emitting diode, a PenTile (PENTILE™) scheme in which RG-GB patterns are repeatedly arranged, or the like, for example.

[0054] In addition, the sub-pixel circuit may include at least one driving transistor, at least one switching transistor, at least one capacitor, or the like. In an embodiment, the sub-pixel circuit may include one driving transistor (e.g., a first transistor TR**1** of FIG. **2**), at least eight switching transistors (e.g., second to seventh transistors TR**2**, TR**3_1**, TR**3_2**, TR**4_1**, TR**4_2**, TR**5**, TR**6**, and TR**7** of FIG. **2**), one storage capacitor (e.g., a storage capacitor CST of FIG. **2**), a capacitor (a capacitor CAP of FIG. **2**), or the like.

[0055] However, although the display device **100** (or the display area **10** and each of the sub-pixel areas **20**) has been shown as having a quadrangular (e.g., rectangular) shape, the shape of the display device **100** is not limited thereto. In an embodiment, the display device **100** may have a triangular shape, a rhombic shape, a polygonal shape, a track shape, a circular shape, or an elliptical shape in a plan view, for example.

[0056] FIG. **2** is a circuit diagram showing a sub-pixel disposed in a sub-pixel area of FIG. **1**.

[0057] Referring to FIG. **2**, a sub-pixel SP may be disposed in each of the sub-pixel areas **20** of the display device

100. The sub-pixel SP may include a sub-pixel circuit SPC and an organic light emitting diode OLED. In this case, the sub-pixel circuit SPC may include first to seventh transistors TR**1**, TR**2**, TR**3_1**, TR**3_2**, TR**4_1**, TR**4_2**, TR**5**, TR**6**, and TR**7**, a storage capacitor CST, a capacitor CAP, wires, or the like, and the wires may include a wire to which a first power supply voltage ELVDD is applied, a wire to which a second power supply voltage ELVSS is applied, a wire to which an initialization voltage VINT is applied, a wire to which a data signal DATA is applied, a wire to which a gate signal GW is applied, a wire to which a gate initialization signal GI is applied, a wire to which an emission control signal EM is applied, a wire to which a diode initialization signal GB is applied, or the like. In addition, the sub-pixel circuit SPC may further include an active layer (e.g., an active layer **130** of FIG. **3**) which connects the first to seventh transistors TR**1**, TR**2**, TR**3_1**, TR**3_2**, TR**4_1**, TR**4_2**, TR**5**, TR**6**, and TR**7**, the storage capacitor CST, the capacitor CAP, or the like to each other.

[0058] The first transistor TR**1** may correspond to a driving transistor, and the second to seventh transistors TR**2**, TR**3_1**, TR**3_2**, TR**4_1**, TR**4_2**, TR**5**, TR**6**, and TR**7** may correspond to switching transistors. Each of the first to seventh transistors TR**1**, TR**2**, TR**3_1**, TR**3_2**, TR**4_1**, TR**4_2**, TR**5**, TR**6**, and TR**7** may include a first terminal, a second terminal, a channel, and a gate terminal. In an embodiment, the first terminal may be a source terminal, and the second terminal may be a drain terminal. In some embodiments, the first terminal may be a drain terminal, and the second terminal may be a source terminal.

[0059] The organic light emitting diode OLED (e.g., corresponding to a light emitting structure **200** of FIG. **9**) may output a light based on a driving current ID. The organic light emitting diode OLED may include a first terminal and a second terminal. In an embodiment, the second terminal of the organic light emitting diode OLED may receive the second power supply voltage ELVSS, for example. In an embodiment, the first terminal of the organic light emitting diode OLED may be an anode terminal, and the second terminal of the organic light emitting diode OLED may be a cathode terminal, for example. In some embodiments, the first terminal of the organic light emitting diode may be a cathode terminal, and the second terminal of the organic light emitting diode OLED may be an anode terminal. In an embodiment, the anode terminal of the organic light emitting diode OLED may correspond to a lower electrode **290** of FIG. **9**, and the cathode terminal of the organic light emitting diode OLED may correspond to an upper electrode **340** of FIG. **9**.

[0060] The first transistor TR**1** (e.g., corresponding to a driving transistor **250** shown in FIG. **9**) may generate the driving current ID. In an embodiment, the first transistor TR**1** may operate in a saturation region. In this case, the first transistor TRI may generate the driving current ID based on a voltage difference between the gate terminal and the source terminal of the first transistor TR**1**. In addition, gray levels may be expressed based on a magnitude of the driving current ID supplied to the organic light emitting diode OLED. In some embodiments, the first transistor TR**1** may operate in a linear region. In this case, the gray levels may be expressed based on a sum of a time during which the driving current ID is supplied to the organic light emitting diode OLED within one frame.

[0061] The gate terminal of the second transistor TR**2** may receive the gate signal GW. The first terminal of the second transistor TR**2** may receive the data signal DATA. The second terminal of the second transistor TR**2** may be connected to the first terminal of the first transistor TR**1**. The second transistor TR**2** may supply the data signal DATA to the first terminal of the first transistor TR**1** during an activation period of the gate signal GW. In this case, the second transistor TR**2** may operate in a linear region.

[0062] The third transistors TR**3_1** and TR**3_2** (e.g., corresponding to a dual gate transistor DGT shown in FIG. **9**) may be connected in series, and may operate as a dual gate transistor. In an embodiment, the same signal may be applied to the gate terminals of the third transistors TR**3_1** and TR**3_2**, for example. In other words, the gate terminals of the third transistors TR**3_1** and TR**3_2** may receive the gate signal GW. In addition, the second terminal of the third transistor TR**3_1** and the first terminal of the third transistor TR**3_2** may be connected to each other. Moreover, when the dual gate transistor is turned off, a leakage current may be reduced. The first terminal of the third transistor TR**3_1** may be connected to the gate terminal of the first transistor TR**1**. The second terminal of the third transistor TR**3_2** may be connected to the second terminal of the first transistor TR**1**. According to other embodiments, the third transistors TR**3_1** and TR**3_2** may be implemented as a triple gate transistor including three transistors.

[0063] Each of the third transistors TR**3_1** and TR**3_2** may connect the gate terminal of the first transistor TR**1** to the second terminal of the first transistor TRI during the activation period of the gate signal GW. In this case, each of the third transistors TR**3_1** and TR**3_2** may operate in a linear region. In other words, each of the third transistors TR**3_1** and TR**3_2** may diode-connect the first transistor TR**1** during the activation period of the gate signal GW. Since the first transistor TR**1** is diode-connected, a voltage difference corresponding to a threshold voltage of the first transistor TRI may occur between the first terminal of the first transistor TR**1** and the gate terminal of the first transistor TR**1**. As a result, a voltage obtained by summing up a voltage of the data signal DATA supplied to the first terminal of the first transistor TR**1** and the voltage difference (i.e., the threshold voltage) may be supplied to the gate terminal of the first transistor TRI during the activation period of the gate signal GW. In other words, the data signal DATA may be compensated for by the threshold voltage of the first transistor TR**1**, and the compensated data signal DATA may be supplied to the gate terminal of the first transistor TR**1**.

[0064] The fourth transistors TR**4_1** and TR**4_2** may be connected in series, and may operate as a dual gate transistor. In an embodiment, the same signal may be applied to the gate terminals of the fourth transistors TR**4_1** and TR**4_2**, for example. In other words, the gate terminals of the fourth transistors TR**4 1** and TR**4_2** may receive the gate initialization signal GI. In addition, the first terminal of the fourth transistor TR**4_1** and the second terminal of the fourth transistor TR**4_2** may be connected to each other. Moreover, when the dual gate transistor is turned off, a leakage current may be reduced. The second terminal of the fourth transistor TR**4_1** may be connected to the gate terminal of the first transistor TRI and a first terminal of the storage capacitor CST. The first terminal of the fourth transistor TR**4 2** may receive the initialization voltage VINT. According to other

embodiments, the fourth transistors TR**4_1** and TR**4_2** may be implemented as a triple gate transistor including three transistors.

[0065] Each of the fourth transistors TR**4_1** and TR**4_2** may supply the initialization voltage VINT to the gate terminal of the first transistor TRI during an activation period of the gate initialization signal GI. In this case, each of the fourth transistors TR**4_1** and TR**4_2** may operate in a linear region. In other words, each of the fourth transistors TR**4 1** and TR**4_2** may initialize the gate terminal of the first transistor TR**1** to the initialization voltage VINT during the activation period of the gate initialization signal GI.

[0066] In an embodiment, the gate initialization signal GI may be substantially the same as the gate signal GW of one horizontal time before. In an embodiment, a gate initialization signal GI supplied to a sub-pixel SP in an nth row (where n is an integer greater than or equal to 2) among a plurality of sub-pixels SP included in the display device **100** may be a signal that is substantially the same as a gate signal GW supplied to a sub-pixel SP in an $(n-1)^{th}$ row among the sub-pixels SP, for example. In other words, an activated gate signal GW may be supplied to the sub-pixel SP in the $(n-1)^{th}$ row among the sub-pixels SP, so that an activated gate initialization signal GI may be supplied to the sub-pixel SP in the nth row among the sub-pixels SP. As a result, the data signal DATA may be supplied to the sub-pixel SP in the $(n-1)^{th}$ row among the sub-pixels SP, and simultaneously, the gate terminal of the first transistor TR**1** included in the sub-pixel SP in the nth row among the sub-pixels SP may be initialized to the initialization voltage VINT.

[0067] The gate terminal of the fifth transistor TR**5** may receive the emission control signal EM. The first terminal of the fifth transistor TR**5** may receive the first power supply voltage ELVDD. The second terminal of the fifth transistor TR**5** may be connected to the first terminal of the first transistor TR**1**.

[0068] The fifth transistor TR**5** may supply the first power supply voltage ELVDD to the first terminal of the first transistor TR**1** during an activation period of the emission control signal EM. On the contrary, the fifth transistor TR**5** may cut off the supply of the first power supply voltage ELVDD during an inactivation period of the emission control signal EM. In this case, the fifth transistor TR**5** may operate in a linear region. Since the fifth transistor TR**5** supplies the first power supply voltage ELVDD to the first terminal of the first transistor TRI during the activation period of the emission control signal EM, the first transistor TR**1** may generate the driving current ID. In addition, since the fifth transistor TR**5** cuts off the supply of the first power supply voltage ELVDD during the inactivation period of the emission control signal EM, the data signal DATA supplied to the first terminal of the first transistor TR**1** may be supplied to the gate terminal of the first transistor TR**1**.

[0069] The gate terminal of the sixth transistor TR**6** may receive the emission control signal EM. The first terminal of the sixth transistor TR**6** may be connected to the second terminal of the first transistor TR**1**. The second terminal of the sixth transistor TR**6** may be connected to the first terminal of the organic light emitting diode OLED.

[0070] The sixth transistor TR**6** may supply the driving current ID generated by the first transistor TR**1** to the organic light emitting diode OLED during the activation period of the emission control signal EM. In this case, the sixth transistor TR**6** may operate in a linear region. In other words, since the sixth transistor TR**6** supplies the driving current ID generated by the first transistor TR**1** to the organic light emitting diode OLED during the activation period of the emission control signal EM, the organic light emitting diode OLED may output the light. In addition, since the sixth transistor TR**6** electrically separates the first transistor TR**1** and the organic light emitting diode OLED from each other during the inactivation period of the emission control signal EM, the data signal DATA supplied to the second terminal of the first transistor TR**1** (precisely, a data signal that has been subject to threshold voltage compensation) may be supplied to the gate terminal of the first transistor TR**1**.

[0071] The gate terminal of the seventh transistor TR**7** may receive the diode initialization signal GB. The first terminal of the seventh transistor TR**7** may receive the initialization voltage VINT. The second terminal of the seventh transistor TR**7** may be connected to the first terminal of the organic light emitting diode OLED.

[0072] The seventh transistor TR**7** may supply the initialization voltage VINT to the first terminal of the organic light emitting diode OLED during an activation period of the diode initialization signal GB. In this case, the seventh transistor TR**7** may operate in a linear region. In other words, the seventh transistor TR**7** may initialize the first terminal of the organic light emitting diode OLED to the initialization voltage VINT during the activation period of the diode initialization signal GB.

[0073] In some embodiments, the gate initialization signal GI and the diode initialization signal GB may be substantially the same signal. An operation of initializing the gate terminal of the first transistor TR**1** and an operation of initializing the first terminal of the organic light emitting diode OLED may not affect each other. In other words, the operation of initializing the gate terminal of the first transistor TR**1** and the operation of initializing the first terminal of the organic light emitting diode OLED may be independent of each other.

[0074] The storage capacitor CST may include a first terminal and a second terminal. The storage capacitor CST may be connected between a first power supply voltage (ELVDD) wire and the gate terminal of the first transistor TR**1**. In an embodiment, the first terminal of the storage capacitor CST may be connected to the gate terminal of the first transistor TR**1**, and the second terminal of the storage capacitor CST may be connected to the first power supply voltage (ELVDD) wire, for example. The storage capacitor CST may maintain a voltage level of the gate terminal of the first transistor TR**1** during an inactivation period of the gate signal GW. The inactivation period of the gate signal GW may include the activation period of the emission control signal EM, and the driving current ID generated by the first transistor TR**1** may be supplied to the organic light emitting diode OLED during the activation period of the emission control signal EM. Therefore, the driving current ID generated by the first transistor TR**1** may be supplied to the organic light emitting diode OLED based on the voltage level maintained by the storage capacitor CST.

[0075] The capacitor CAP may include a first terminal and a second terminal. The capacitor CAP may be connected between the first power supply voltage (ELVDD) wire and the third transistors TR**3_1** and TR**3_2** (e.g., to a first node N**1**). In an embodiment, the first terminal of the capacitor CAP may be connected to the second terminal of the third

transistor TR**3_1** and the first terminal of the third transistor TR**3_2**, and the second terminal of the capacitor CAP may be connected to the first power supply voltage (ELVDD) wire, for example.

[0076] A gate signal (GW) wire, a gate initialization signal (GI) wire, a data signal (DATA) wire, or the like may be disposed at a periphery of the first node N**1**, and a voltage of the first node N**1** may fluctuate due to voltage variations of the gate signal (GW) wire, the gate initialization signal (GI) wire, and the data signal (DATA) wire. In an embodiment, the first node N**1** and the capacitor CAP may be connected to each other, so that a voltage fluctuation at the first node N**1** that may be caused by the voltage variations of the gate signal (GW) wire, the gate initialization signal (GI) wire, and the data signal (DATA) wire disposed at the periphery of the first node N**1** may be reduced.

[0077] In addition, when the inactivation period of the gate signal GW starts after the activation period of the gate signal GW ends, the voltage of the first node N**1** may be increased, and a voltage between the first and second terminals of each of the third transistors TR**3_1** and TR**3_2** may be increased, so that a voltage of the gate terminal of the first transistor TR**1** may also be increased. In this case, a flicker phenomenon in which a luminance of the organic light emitting diode OLED is reduced may occur. In an embodiment, since the first node N**1** and the capacitor CAP are connected to each other, the voltage between the first and second terminals of each of the third transistors TR**3_1** and TR**3_2** may be reduced, so that the flicker phenomenon may not occur.

[0078] However, although the sub-pixel SP has been described as including one driving

[0079] transistor, two dual gate transistors, four switching transistors, one storage capacitor, one capacitor, or the like, the configuration of the invention is not limited thereto. In an embodiment, the sub-pixel SP may include one driving transistor, at least one dual gate transistor, at least one switching transistor, at least one storage capacitor, and one capacitor CAP, for example.

[0080] FIGS. **3** to **8** are plan views for describing the display device of FIG. **1**. In an embodiment, the first to seventh transistors TR**1**, TR**2**, TR**3_1**, TR**3_2**, TR**4_1**, TR**4_2**, TR**5**, TR**6**, and TR**7**, the storage capacitor CST, the capacitor CAP, the wire to which the initialization voltage VINT is applied, the wire to which the gate signal GW is applied, the wire to which the gate initialization signal GI is applied, and the wire to which the emission control signal EM is applied, which are shown in FIG. **2**, are shown in a layout. For convenience of description, not all components included in the display device **100** may be shown in FIGS. **3** to **8**. In this case, FIG. **6** is a partially enlarged plan view showing a region A of FIG. **5**.

[0081] Referring to FIGS. **3**, **4**, **5**, and **6**, the display device **100** may include a substrate (e.g., a substrate **110** of FIG. **9**), an active layer **130**, a first gate electrode **180**, a second gate electrode **170**, a gate electrode pattern **185**, a gate initialization wire **510**, an emission control signal wire **520**, or the like.

[0082] As shown in FIG. **3**, the active layer **130** may be disposed in the sub-pixel area **20** on the substrate. The active layer **130** may include first to tenth regions a, b, c, d, e, f, g, h, i, and j (e.g., regions where the active layer **130** does not overlap the first gate electrode **180**, the second gate electrode **170**, the gate initialization wire **510**, and the emission control signal wire **520**). The first to tenth regions a, b, c, d, e, f, g, h, i, and j may be doped with impurities (or ions), and may have relatively high electrical conductivities. The first to tenth regions a, b, c, d, e, f, g, h, i, and j may indicate regions constituting the source electrodes or the drain electrodes of the first to seventh transistors TR**1**, TR**2**, TR**3_1**, TR**3_2**, TR**4_1**, TR**4_2**, TR**5**, TR**6**, and TR**7**, in which a boundary between the regions may not be clearly distinguished, and the regions may be electrically connected to each other.

[0083] As shown in FIGS. **4** and **5**, the first gate electrode **180**, the second gate electrode **170**, the gate electrode pattern **185**, the gate initialization wire **510**, and the emission control signal wire **520** may be disposed on the active layer **130**.

[0084] The first gate electrode **180** may extend in the first direction D**1**, and may have a protrusion protruding in the second direction D**2** between the first region a and the second region b. The protrusion of the first gate electrode **180** may constitute the third transistor TR**3_1** together with the first region a and the second region b, and the first gate electrode **180** may constitute the third transistor TR**3_2** together with the second region b and the third region c. The first gate electrode **180** may function as the wire to which the gate signal GW is applied, which is shown in FIG. **2**. In other words, the gate signal GW may be applied to the third transistors TR**3_1** and TR**3_2**, and the third transistors TR**3_1** and TR**3_2** may function as a dual gate transistor. A first portion of the first gate electrode **180** (or a portion of the protrusion of the first gate electrode **180**) overlapping the channel of the third transistor TR**3_1** may be defined as a first sub-gate electrode **180***a*, and a second portion of the first gate electrode **180** overlapping the channel of the third transistor TR**3_2** may be defined as a second sub-gate electrode **180***b* (refer to FIG. **6**).

[0085] In addition, the first gate electrode **180** may constitute the second transistor TR**2** together with the fourth region d and the fifth region e.

[0086] The second gate electrode **170** may have an island shape. The second gate electrode **170** may constitute the first transistor TR**1** (e.g., the driving transistor **250** of FIG. **9**) together with the third region c and the fourth region d.

[0087] The gate initialization wire **510** may extend in the first direction D**1**. The gate initialization wire **510** may constitute the fourth transistor TR**4_1** together with the sixth region f and the seventh region g, and the gate initialization wire **510** may constitute the fourth transistor TR**4_2** together with the seventh region g and the first region a. The gate initialization wire **510** may function as the wire to which the gate initialization signal GI is applied, which is shown in FIG. **2**. In other words, the gate initialization signal GI may be applied to the fourth transistors TR**4_1** and TR**4 2**, and the fourth transistors TR**4_1** and TR**4 2** may function as a dual gate transistor.

[0088] In addition, the gate initialization wire **510** may constitute the seventh transistor TR**7** together with the sixth region f and the tenth region j.

[0089] The emission control signal wire **520** may extend in the first direction D**1**. The emission control signal wire **520** may constitute the fifth transistor TR**5** together with the fourth region d and the eighth region h, and the emission control signal wire **520** may constitute the sixth transistor TR**6** together with the third region c and the ninth region i.

[0090] The gate electrode pattern **185** may be disposed on the second region b. In an embodiment, the second region b may correspond to the first node N**1** of FIG. **2**. In other words, the gate electrode pattern **185** may constitute the capacitor CAP together with the second region b.

[0091] Referring to FIGS. **7** and **8**, the display device **100** may further include an initialization voltage wire **530** and a third gate electrode **175**.

[0092] The initialization voltage wire **530** and the third gate electrode **175** may be disposed on the first gate electrode **180**, the second gate electrode **170**, the gate electrode pattern **185**, the gate initialization wire **510**, and the emission control signal wire **520**.

[0093] The initialization voltage wire **530** may extend in the first direction D**1**. The initialization voltage wire **530** may function as the wire to which the initialization voltage VINT is applied, which is shown in FIG. **2**.

[0094] The third gate electrode **175** may extend in the first direction D**1**. The third gate electrode **175** may overlap the second gate electrode **170**. The third gate electrode **175** may constitute the storage capacitor CST together with the second gate electrode **170**.

[0095] FIG. **9** is a cross-sectional view taken along line I-I' of FIG. **8**. In an embodiment, the first and third transistors TR**1**, TR**3_1**, and TR**3_2**, the storage capacitor CST, the capacitor CAP, or the like shown in FIGS. **3** to **8** are shown in the cross-sectional view, for example. For convenience of description, not all components included in the display device **100** may be shown in FIG. **9**.

[0096] Referring to FIG. **9**, the display device **100** may include a substrate **110**, a buffer layer **115**, a gate electrode pattern **185**, a driving transistor **250**, a dual gate transistor DGT, a storage capacitor **259**, an insulating pattern **165**, a first gate insulating layer **150**, a second gate insulating layer **155**, an inter-insulating layer **190**, a connection pattern **215**, a power supply wire **235**, a connection electrode **210**, a planarization layer **270**, a light emitting structure **200**, a pixel defining layer **310**, a thin film encapsulation structure **450**, or the like.

[0097] In this case, the substrate **110** may include a first organic layer **111**, a first inorganic layer **112**, a silicon layer **120**, a second organic layer **113**, and a second inorganic layer **114**, and the active layer **130** may include a first region a, a second region b, a third region c, a fourth region d, a first channel region ch**1**, a second channel region ch**2**, and a third channel region ch**3**.

[0098] In addition, the first gate electrode **180** may include a first sub-gate electrode **180***a* and a second sub-gate electrode **180***b*, and the dual gate transistor DGT may include a first sub-transistor **255** and a second sub-transistor **257**.

[0099] Further, the first sub-transistor **255** may include the active layer **130** (e.g., the first region a, the first channel region ch**1**, and the second region b) and the first sub-gate electrode **180***a*, and the second sub-transistor **257** may include the active layer **130** (e.g., the second region b, the second channel region ch**2**, and the third region c) and the second sub-gate electrode **180***b*.

[0100] In addition, the driving transistor **250** may include the active layer **130** (e.g., the third region c, the third channel region ch**3**, and the fourth region d) and the second gate electrode **170**, and the storage capacitor **259** may include the second gate electrode **170** and the third gate electrode **175**. In this case, the second gate electrode **170** may function as a gate electrode of the driving transistor **250**, or a lower capacitor electrode of the storage capacitor **259**.

[0101] Moreover, the light emitting structure **200** may include a lower electrode **290**, a light emitting layer **330**, and an upper electrode **340**, and the thin film encapsulation structure **450** may include a first inorganic thin film encapsulation layer **451**, an organic thin film encapsulation layer **452**, and a second inorganic thin film encapsulation layer **453**.

[0102] In an embodiment, the second region b of the active layer **130** and the gate electrode pattern **185** may correspond to the capacitor CAP shown in FIGS. **2** and **8**.

[0103] The first organic layer **111** may be provided. The first organic layer **111** may include an organic material having flexibility. In an embodiment, the first organic layer **111** may include a random copolymer or a block copolymer, for example. In addition, the first organic layer **111** may have high transparency, a low coefficient of thermal expansion, and a high glass transition temperature. The first organic layer **111** may include an imide group, so that the first organic layer **111** may have an excellent heat resistance, an excellent chemical resistance, an excellent abrasion resistance, and excellent electrical properties. In an embodiment, the first organic layer **111** may include polyimide.

[0104] The first inorganic layer **112** may be disposed on the first organic layer **111**. In other words, a top surface of the first organic layer **111** and a bottom surface of the first inorganic layer **112** may directly contact with each other, and the first inorganic layer **112** may be disposed over an entirety of the first organic layer **111**. The first inorganic layer **112** may block moisture penetrating through the first organic layer **111**. The first inorganic layer **112** may include an inorganic material having flexibility. In an embodiment, the first inorganic layer **112** may include a silicon compound, metal oxide, or the like.

[0105] The silicon layer **120** may be disposed on the first inorganic layer **112**. The silicon layer **120** may bond the first inorganic layer **112** to the second organic layer **113**. In other words, a bottom surface of the silicon layer **120** may directly contact with the first inorganic layer **112**, a top surface of the silicon layer **120** may directly contact with the second organic layer **113**, and the silicon layer **120** may be disposed over an entirety of the first inorganic layer **112** and the second organic layer **113** between the first inorganic layer **112** and the second organic layer **113**. The silicon layer **120** may include a silicon material having an adhesive function. In an embodiment, the silicon layer **120** may include amorphous silicon (e.g., non-crystalline silicon).

[0106] The second organic layer **113** may be disposed on the silicon layer **120**. In other words, the second organic layer **113** may be disposed over an entirety of the silicon layer **120**. The second organic layer **113** may include an organic material having flexibility. In an embodiment, the second organic layer **113** may include a random copolymer or a block copolymer, for example. In an embodiment, the second organic layer **113** may include the same material as that of the first organic layer **111**.

[0107] The second inorganic layer **114** may be disposed on the second organic layer **113**. In other words, the second inorganic layer **114** may be disposed over an entirety of the second organic layer **113**. The second inorganic layer **114** may block moisture penetrating through the second organic layer **113**. The second inorganic layer **114** may include an inorganic material having flexibility. In an embodiment, the

second inorganic layer **114** may include the same material as that of the first inorganic layer **112**.

[0108] Accordingly, the substrate **110** including the first organic layer **111**, the first inorganic layer **112**, the silicon layer **120**, the second organic layer **113**, and the second inorganic layer **114** may be provided.

[0109] However, although the substrate **110** has been described as having five layers, the configuration of the invention is not limited thereto. In an embodiment, the substrate **110** may include at least four layers, for example.

[0110] According to other embodiments, the substrate **110** may include a quartz substrate, a synthetic quartz substrate, a calcium fluoride substrate, a fluorine-doped quartz substrate (F-doped quartz substrate), a soda lime glass substrate, a non-alkali glass substrate, or the like.

[0111] The buffer layer **115** may be disposed on the substrate **110**. The buffer layer **115** may prevent metal atoms or impurities from diffusing from the substrate **110** to the driving transistor **250** and the dual gate transistor DGT, and may control a heat transfer rate during a crystallization process for forming the active layer **130** to obtain a substantially uniform active layer **130**. In addition, when a surface of the substrate **110** is not uniform, the buffer layer **115** may serve to improve flatness of the surface of the substrate **110**. Depending on a type of the substrate **110**, at least two buffer layers **115** may be provided on the substrate **110**, or the buffer layer **115** may not be provided. In an embodiment, the buffer layer **115** may include a silicon compound, metal oxide, or the like.

[0112] The active layer **130** may be disposed on the buffer layer **115**. The active layer **130** may include a first region a, a second region b, a third region c, a fourth region d, a first channel region ch**1**, a second channel region ch**2**, and a third channel region ch**3**. In this case, the first channel region ch**1** may be disposed between the first region a and the second region b, the second channel region ch**2** may be disposed between the second region b and the third region c, and the third channel region ch**3** may be disposed between the third region c and the fourth region d. The active layer **130** may include a metal oxide semiconductor, an inorganic semiconductor (e.g., amorphous silicon or polysilicon), an organic semiconductor, or the like. The first gate insulating layer **150** may be disposed on the buffer layer **115** and the

[0113] active layer **130**. In an embodiment, an opening **152** that exposes the second region b may be defined in the first gate insulating layer **150**. In an embodiment, the opening **152** may not overlap the first sub-gate electrode **180***a* and the second sub-gate electrode **180***b*, and may overlap the gate electrode pattern **185**, for example.

[0114] The first gate insulating layer **150** may sufficiently cover the active layer **130** on the buffer layer **115**, and may have a substantially flat top surface without creating a step around the active layer **130**. In some embodiments, the first gate insulating layer **150** may be disposed along a profile of the active layer **130** with a uniform thickness to cover the active layer **130** on the buffer layer **115**. In an embodiment, the first gate insulating layer **150** may include a silicon compound, metal oxide, or the like. In an embodiment, the first gate insulating layer **150** may include silicon oxide (SiO_x), silicon nitride (SiN_x), silicon oxynitride (SiO_xN_y), silicon oxycarbide (SiO_xC_y), silicon carbonitride (SiC_xN_y), aluminum oxide (AlO_x), aluminum nitride (AlN_x), tantalum oxide (TaO_x), hafnium oxide (HfO_x), zirconium oxide (ZrO_x), titanium oxide (TiO_x), or the like, for example. In an embodiment, the first gate insulating layer **150** may include silicon oxide (SiO_x) having a relatively low dielectric constant. According to other embodiments, the first gate insulating layer **150** may have a multilayer structure including a plurality of insulating layers. The insulating layers may include mutually different materials from each other, and may have mutually different thicknesses from each other. In the description, the thicknesses may mean a length measured in a direction normal to a plane defined by the first and second directions D**1** and D**2**.

[0115] The insulating pattern **165** may be disposed in the opening **152** on the active layer **130**. The opening **152** may be completely filled with the insulating pattern **165**, and a top surface of the insulating pattern **165** may not create a step with a top surface of the first gate insulating layer **150** disposed at a periphery of the opening **152**. In other words, a thickness of the insulating pattern **165** and a thickness of the first gate insulating layer **150** may be substantially equal to each other. In an embodiment, a bottom surface of the insulating pattern **165** may contact the active layer **130**, and the top surface of the insulating pattern **165** may contact a bottom surface of the gate electrode pattern **185**.

[0116] In an embodiment, the insulating pattern **165** may include a silicon compound, metal oxide, or the like. In an embodiment, the insulating pattern **165** may include silicon nitride (SiN_x) having a relatively high dielectric constant. In other words, a dielectric constant of the insulating pattern **165** may be greater than a dielectric constant of the first gate insulating layer **150**. In some embodiments, the insulating pattern **165** may include metal oxide having a high dielectric constant. In an embodiment, the insulating pattern **165** may include aluminum oxide (AlO_x), zirconium oxide (ZrO_x), hafnium oxide (HfO_x), titanium oxide (TiO_x), or the like, for example. In this case, the term "high dielectric constant" means that a dielectric constant K is greater or equal to 8.

[0117] However, although the opening **152** has been described as exposing an entire area of the active layer **130** disposed in the second region b, and as being filled with the insulating pattern **165**, the configuration of the invention is not limited thereto. In an embodiment, the opening **152** may expose a portion of the active layer **130** disposed in the second region b, and the opening **152** may be filled with the insulating pattern **165**, for example.

[0118] The first sub-gate electrode **180***a* may be disposed in the first channel region ch**1** on the active layer **130**, and the second sub-gate electrode **180***b* may be disposed in the second channel region ch**2** on the active layer **130**. In other words, the first gate electrode **180** may be disposed in the first channel region ch**1** and the second channel region ch**2** on the active layer **130**. As shown in FIG. **8**, the first sub-gate electrode **180***a* and the second sub-gate electrode **180***b* may be formed or provided unitarily with each other as one body, and the first sub-gate electrode **180***a* and the second sub-gate electrode **180***b* may function as gate electrodes of the dual gate transistor DGT. In an embodiment, the gate signal GW of FIG. **2** may be applied to the first gate electrode **180**, for example. In other words, the first sub-gate electrode **180***a* may be defined as the first sub-transistor **255** (e.g., corresponding to the third transistor TR**3** **1** of FIG. **8**) together with the first region a, the second region b, and the first channel region ch**1** of the active layer **130**, and the second sub-gate electrode **180***b* may be defined as the second sub-transistor **257** (e.g., corresponding to the third transistor

TR**3_2** of FIG. **8**) together with the second region b, the third region c, and the second channel region ch**2** of the active layer **130**.

[0119] In an embodiment, the first gate electrode **180** may include a metal, an alloy, metal nitride, conductive metal oxide, a transparent conductive material, or the like. These may be used alone or in any combinations with each other. According to other embodiments, the first gate electrode **180** may have a multilayer structure including a plurality of metal layers. The metal layers may include mutually different materials from each other, and may have mutually different thicknesses from each other.

[0120] The second gate electrode **170** may be disposed in the third channel region ch**3** on the active layer **130**. The second gate electrode **170** may be spaced apart from the first gate electrode **180** and the gate electrode pattern **185**. The second gate electrode **170** may be defined as the driving transistor **250** (e.g., the first transistor TR**1** of FIG. **8**) together with the third region c, the fourth region d, and the third channel region ch**3** of the active layer **130**. In an embodiment, the second gate electrode **170** may include a metal, an alloy, metal nitride, conductive metal oxide, a transparent conductive material, or the like. These may be used alone or in any combinations with each other. According to other embodiments, the second gate electrode **170** may have a multilayer structure including a plurality of metal layers. The metal layers may include mutually different materials from each other, and may have mutually different thicknesses from each other.

[0121] The gate electrode pattern **185** may be disposed in the second region b on the active layer **130**. The gate electrode pattern **185** may be spaced apart from the first gate electrode **180**. In an embodiment, the gate electrode pattern **185** may be disposed in the same layer as the first gate electrode **180** and the second gate electrode **170**. In addition, the first power supply voltage ELVDD (refer to FIG. **2**) may be applied to the gate electrode pattern **185**. Further, the gate electrode pattern **185** and the second region b of the active layer **130** may be defined as the capacitor CAP (refer to FIG. **2**), and the insulating pattern **165** having a relatively high dielectric constant may be interposed between the gate electrode pattern **185** and the second region b. In an embodiment, the gate electrode pattern **185**, the first gate electrode **180** and the second gate electrode **170** may have the same height, but the invention is not limited thereto.

[0122] In an embodiment, the gate electrode pattern **185** may include a metal, an alloy, metal nitride, conductive metal oxide, a transparent conductive material, or the like. In an embodiment, the gate electrode pattern **185** may include gold (Au), silver (Ag), aluminum (Al), platinum (Pt), nickel (Ni), titanium (Ti), palladium (Pd), magnesium (Mg), calcium (Ca), lithium (Li), chromium (Cr), tantalum (Ta), tungsten (W), copper (Cu), molybdenum (Mo), scandium (Sc), neodymium (Nd), iridium (Ir), an aluminum-containing alloy, aluminum nitride (AlN_x), a silver-containing alloy, tungsten nitride (WN_x), a copper-containing alloy, a molybdenum-containing alloy, titanium nitride (TiN_x), chromium nitride (CrN_x), tantalum nitride (TaN_x), strontium ruthenium oxide ($SrRu_xO_y$), zinc oxide (ZnO_x), indium tin oxide ("ITO"), tin oxide (SnO_x), indium oxide (InO_x), gallium oxide (GaO_x), indium zinc oxide ("IZO"), or the like, for example. These may be used alone or in any combinations with each other. According to other embodiments, the gate electrode pattern **185** may have a multilayer structure including a plurality of metal layers. The metal layers may include mutually different materials from each other, and may have mutually different thicknesses from each other.

[0123] According to a conventional display device, in order for the conventional display device to be driven at a low frequency (e.g., about 30 hertz (Hz) or less), a leakage current of a third transistor has to be reduced, for example. In order to reduce the leakage current, the third transistor included in the conventional display device has been changed from a single transistor to a dual gate transistor. In addition, in order to further reduce the leakage current, a lightly doped drain ("LDD") has been added to the dual gate transistor. In this case, it may be difficult to apply the LDD to the dual gate transistor due to limitations such as an LDD area ensuring issue, a process dispersion issue, and an element characteristic ensuring issue. Alternatively, in order to further reduce the leakage current, a bottom metal layer ("BML") has been added to a common region of the dual gate transistor (e.g., the first node N**1** of FIG. **2** or the second region b of FIG. **8**). In this case, a capacitor may be formed or provided in the BML and the common region. However, since two mask processes (e.g., a BML patterning process and a contact hole process for exposing a portion of the BML) are added to form the BML, a manufacturing cost may be relatively increased. In addition, the BML may be disposed between a buffer layer and a second barrier layer, and a thickness of the buffer layer may be approximately 3500 angstroms. Since a distance between the BML and the common region is relatively great, a capacitance of the capacitor may be relatively small. When the capacitance of the capacitor is small, the leakage current may not be significantly reduced, so that the conventional display device may not be driven at a low frequency.

[0124] In the embodiments, since the gate electrode pattern **185**, the first gate electrode **180**, and the second gate electrode **170** are simultaneously formed or provided in the same process, a manufacturing cost may be relatively reduced. In addition, since a distance between the gate electrode pattern **185** and the second region b is relatively small, a capacitance of the capacitor CAP may be relatively increased. Moreover, since the insulating pattern **165** having a relatively high dielectric constant is interposed between the gate electrode pattern **185** and the second region b, the capacitance of the capacitor CAP may be further increased. Accordingly, the leakage current may be significantly reduced in the second region b.

[0125] The second gate insulating layer **155** may be disposed on the first gate insulating layer **150**, the first gate electrode **180**, the second gate electrode **170**, and the gate electrode pattern **185**. The second gate insulating layer **155** may sufficiently cover the first gate electrode **180**, the second gate electrode **170**, and the gate electrode pattern **185** on the first gate insulating layer **150**, and may have a substantially flat top surface without creating a step around the first gate electrode **180**, the second gate electrode **170**, and the gate electrode pattern **185**. In some embodiments, the second gate insulating layer **155** may be disposed along a profile of the first gate electrode **180**, the second gate electrode **170**, and the gate electrode pattern **185** with a uniform thickness to cover the first gate electrode **180**, the second gate electrode **170**, and the gate electrode pattern **185** on the first gate insulating layer **150**. In an embodiment, the second gate insulating layer **155** may include a silicon compound, metal oxide, or the like. According to other

embodiments, the second gate insulating layer **155** may have a multilayer structure including a plurality of insulating layers. The insulating layers may include mutually different materials from each other, and may have mutually different thicknesses from each other.

[0126] The third gate electrode **175** may be disposed on the second gate insulating layer **155**. In other words, the third gate electrode **175** may be disposed on a portion of the second gate insulating layer **155** under which the second gate electrode **170** is disposed. The third gate electrode **175** may be defined as the storage capacitor **259** (e.g., the storage capacitor CST of FIG. **2**) together with the second gate electrode **170**. In an embodiment, the third gate electrode **175** may include a metal, an alloy, metal nitride, conductive metal oxide, a transparent conductive material, or the like. These may be used alone or in any combinations with each other. According to other embodiments, the third gate electrode **175** may have a multilayer structure including a plurality of metal layers. The metal layers may include mutually different materials from each other, and may have mutually different thicknesses from each other.

[0127] The inter-insulating layer **190** may be disposed on the second gate insulating layer **155** and the third gate electrode **175**. The inter-insulating layer **190** may sufficiently cover the third gate electrode **175** on the second gate insulating layer **155**, and may have a substantially flat top surface without creating a step around the third gate electrode **175**. In some embodiments, the inter-insulating layer **190** may be disposed along a profile of the third gate electrode **175** with a uniform thickness to cover the third gate electrode **175** on the second gate insulating layer **155**. In an embodiment, the inter-insulating layer **190** may include a silicon compound, metal oxide, or the like. According to other embodiments, the inter-insulating layer **190** may have a multilayer structure including a plurality of insulating layers. The insulating layers may include mutually different materials from each other, and may have mutually different thicknesses from each other.

[0128] The connection pattern **215** may be disposed in the second region b on the inter-insulating layer **190**. The first power supply voltage ELVDD (refer to FIG. **2**) may be applied to the connection pattern **215**. The connection pattern **215** may be connected to the gate electrode pattern **185** through a contact hole defined by removing portions of the second gate insulating layer **155** and the inter-insulating layer **190**. In other words, the first power supply voltage ELVDD may be provided to the gate electrode pattern **185** through the connection pattern **215**. In an embodiment, the connection pattern **215**, the power supply wire **235**, and the connection electrode **210** may be disposed in the same layer. In an embodiment, the connection pattern **215** may include a metal, an alloy, metal nitride, conductive metal oxide, a transparent conductive material, or the like. These may be used alone or in any combinations with each other. According to other embodiments, the connection pattern **215** may have a multilayer structure including a plurality of metal layers. The metal layers may include mutually different materials from each other, and may have mutually different thicknesses from each other.

[0129] The power supply wire **235** may be disposed in the third channel region ch**3** on the inter-insulating layer **190**. The power supply wire **235** may be spaced apart from the connection pattern **215** and the connection electrode **210**. The power supply wire **235** may function as a wire. In an embodiment, the first power supply voltage ELVDD (refer to FIG. **2**) may be applied to the power supply wire **235**, and the power supply wire **235** may extend in the second direction D**2**, for example. The power supply wire **235** may be connected to the third gate electrode **175** through a contact hole defined by removing a portion of the inter-insulating layer **190**. In other words, the first power supply voltage ELVDD may be applied to the third gate electrode **175**. In an embodiment, the power supply wire **235** may include a metal, an alloy, metal nitride, conductive metal oxide, a transparent conductive material, or the like. These may be used alone or in any combinations with each other. According to other embodiments, the power supply wire **235** may have a multilayer structure including a plurality of metal layers. The metal layers may include mutually different materials from each other, and may have mutually different thicknesses from each other.

[0130] The connection electrode **210** may be disposed in the first region a on the inter-insulating layer **190**. The connection electrode **210** may be spaced apart from the connection pattern **215** and the power supply wire **235**. In an embodiment, a first portion of the connection electrode **210** may be connected to the first region a, and a second portion of the connection electrode **210** may be connected to the second gate electrode **170** in another cross-sectional view of the display device **100**, for example. In other words, the initialization voltage VINT (refer to FIG. **2**) applied to the first region a may be provided to the second gate electrode **170** through the connection electrode **210**. The first portion of the connection electrode **210** may be connected to the first region a of the active layer **130** through a contact hole defined by removing portions of the first gate insulating layer **150**, the second gate insulating layer **155**, and the inter-insulating layer **190**. In an embodiment, the connection electrode **210** may include a metal, an alloy, metal nitride, conductive metal oxide, a transparent conductive material, or the like. These may be used alone or in any combinations with each other. According to other embodiments, the connection electrode **210** may have a multilayer structure including a plurality of metal layers. The metal layers may include mutually different materials from each other, and may have mutually different thicknesses from each other.

[0131] The planarization layer **270** may be disposed on the inter-insulating layer **190**, the connection pattern **215**, the power supply wire **235**, and the connection electrode **210**. The planarization layer **270** may have a relatively thick thickness to sufficiently cover the connection pattern **215**, the power supply wire **235**, and the connection electrode **210**. The planarization layer **270** may include an organic insulating material or an inorganic insulating material. In an embodiment, the planarization layer **270** may include an organic insulating material. In an embodiment, the planarization layer **270** may include a photoresist, a polyacryl-based resin, a polyimide-based resin, a polyamide-based resin, a siloxane-based resin, an acryl-based resin, an epoxy-based resin, or the like, for example.

[0132] The lower electrode **290** may be disposed on the planarization layer **270**. In an embodiment, the lower electrode **290** may include a metal, an alloy, metal nitride, conductive metal oxide, a transparent conductive material, or the like. These may be used alone or in any combinations with each other. According to other embodiments, the lower electrode **290** may have a multilayer structure including a plurality of metal layers. The metal layers may include

mutually different materials from each other, and may have mutually different thicknesses from each other.

[0133] The pixel defining layer **310** may be disposed on the planarization layer **270** and a portion of the lower electrode **290**. In other words, the pixel defining layer **310** may expose a portion of the lower electrode **290**. The pixel defining layer **310** may include an organic insulating material or an inorganic insulating material. In an embodiment, the pixel defining layer **310** may include an organic insulating material.

[0134] The light emitting layer **330** may be disposed on the lower electrode **290**. The light emitting layer **330** may have a multilayer structure including an organic light emission layer ("EML"), a hole injection layer ("HIL"), a hole transport layer ("HTL"), an electron transport layer ("ETL"), an electron injection layer ("EIL"), or the like. In an embodiment, the EML of the light emitting layer **330** may be formed or provided by at least one of light emitting materials for emitting different color lights (i.e., a red light, a green light, a blue light, etc.) according to sub-pixels. In an alternative embodiment, the EML of the light emitting layer **330** may be formed or provided by stacking a plurality of light emitting materials for generating different color lights such as a red light, a green light, and a blue light to emit a white light as a whole. In this case, a color filter may be disposed on the light emitting layer **330** disposed on the lower electrode **290**. In an embodiment, the color filter may include at least one of a red color filter, a green color filter, and a blue color filter. In some embodiments, the color filter may include a yellow color filter, a cyan color filter, and a magenta color filter. The color filter may include a photosensitive resin or a color photoresist.

[0135] The upper electrode **340** may be disposed on the light emitting layer **330**. The second power supply voltage ELVSS (refer to FIG. **2**) may be applied to the upper electrode **340**. In an embodiment, the upper electrode **340** may include a metal, an alloy, metal nitride, conductive metal oxide, a transparent conductive material, or the like. These may be used alone or in any combinations with each other. According to other embodiments, the upper electrode **340** may have a multilayer structure including a plurality of metal layers. In an embodiment, the metal layers may include mutually different materials from each other, and may have mutually different thicknesses from each other, for example.

[0136] Accordingly, the light emitting structure **200** including the lower electrode **290**, the light emitting layer **330**, and the upper electrode **340** may be provided.

[0137] The first inorganic thin film encapsulation layer **451** may be disposed on the upper electrode **340**. In an embodiment, the first inorganic thin film encapsulation layer **451** may be disposed along a profile of the upper electrode **340**, for example. The first inorganic thin film encapsulation layer **451** may prevent the light emitting structure **200** from deteriorating due to penetration of moisture, oxygen, or the like. In addition, the first inorganic thin film encapsulation layer **451** may perform a function of protecting the light emitting structure **200** from an external impact. The first inorganic thin film encapsulation layer **451** may include an inorganic insulating material having flexibility.

[0138] The organic thin film encapsulation layer **452** may be disposed on the first inorganic thin film encapsulation layer **451**. The organic thin film encapsulation layer **452** may improve flatness of the display device **100**, and may protect the light emitting structure **200** together with the first inorganic thin film encapsulation layer **451**. The organic thin film encapsulation layer **452** may include an organic insulating material having flexibility.

[0139] The second inorganic thin film encapsulation layer **453** may be disposed on the organic thin film encapsulation layer **452**. The second inorganic thin film encapsulation layer **453** may be disposed along a profile of the organic thin film encapsulation layer **452** with a uniform thickness to cover the organic thin film encapsulation layer **452**. The second inorganic thin film encapsulation layer **453** may prevent the light emitting structure **200** from deteriorating due to the penetration of moisture, oxygen, or the like together with the first inorganic thin film encapsulation layer **451**. In addition, the second inorganic thin film encapsulation layer **453** may perform a function of protecting the light emitting structure **200** from an external impact together with the first inorganic thin film encapsulation layer **451** and the organic thin film encapsulation layer **452**. The second inorganic thin film encapsulation layer **453** may include an inorganic insulating material having flexibility.

[0140] Accordingly, the thin film encapsulation structure **450** including the first inorganic thin film encapsulation layer **451**, the organic thin film encapsulation layer **452**, and the second inorganic thin film encapsulation layer **453** may be provided. In some embodiments, the thin film encapsulation structure **450** may have a five-layer structure in which first to fifth thin film encapsulation layers are stacked or a seven-layer structure in which first to seventh thin film encapsulation layers are stacked.

[0141] Since the display device **100** in the embodiments of the invention includes the gate electrode pattern **185** disposed in the same layer as the first gate electrode **180** and the second gate electrode **170**, the distance between the gate electrode pattern **185** and the second region b may be relatively reduced, and the capacitance of the capacitor CAP may be relatively increased. In addition, since the insulating pattern **165** having a relatively high dielectric constant is interposed between the gate electrode pattern **185** and the second region b, the capacitance of the capacitor CAP may be further increased. Accordingly, the leakage current may be significantly reduced in the second region b, and the display device **100** may be driven at a low frequency.

[0142] FIGS. **10** to **22** are views showing an embodiment of a method of manufacturing a display device according to the invention.

[0143] Referring to FIG. **10**, a rigid glass substrate **105** may be provided. A first organic layer **111** may be formed or disposed on the glass substrate **105**. The first organic layer **111** may be formed or provided by an organic material having flexibility. In an embodiment, the first organic layer **111** may include polyimide.

[0144] A first inorganic layer **112** may be formed or disposed on the first organic layer **111**. The first inorganic layer **112** may block moisture penetrating through the first organic layer **111**. The first inorganic layer **112** may be formed or provided by an inorganic material having flexibility. In an embodiment, the first inorganic layer **112** may include a silicon compound, metal oxide, or the like.

[0145] A silicon layer **120** may be formed or disposed on the first inorganic layer **112**. The silicon layer **120** may include a silicon material having an adhesive function. In an embodiment, the silicon layer **120** may be formed or disposed by amorphous silicon.

[0146] A second organic layer **113** may be formed or disposed on the silicon layer **120**. The second organic layer **113** may be formed or provided by an organic material having flexibility. In an embodiment, the second organic layer **113** may include polyimide, for example.

[0147] A second inorganic layer **114** may be formed or disposed on the second organic layer **113**. The second inorganic layer **114** may block moisture penetrating through the second organic layer **113**. The second inorganic layer **114** may be formed or provided by an inorganic material having flexibility. In an embodiment, the second inorganic layer **114** may include the same material as that of the first inorganic layer **112**.

[0148] Accordingly, a substrate **110** including the first organic layer **111**, the first inorganic layer **112**, the silicon layer **120**, the second organic layer **113**, and the second inorganic layer **114** may be formed or provided.

[0149] Since the substrate **110** is thin and flexible, the substrate **110** may be formed or disposed on the rigid glass substrate **105**. In an embodiment, after performing a subsequent process, the glass substrate may be removed from the substrate **110**, for example. In other words, due to the flexible physical properties of the substrate **110**, it may be difficult to directly perform the subsequent process on the substrate **110**. When taking the above point into consideration, the subsequent process may be performed by the rigid glass substrate **105**, and the glass substrate **105** may be removed, so that the first organic layer **111**, the first inorganic layer **112**, the second organic layer **113**, and the second inorganic layer **114** may be used as the substrate **110**. In addition, the silicon layer **120** may be interposed between the first inorganic layer **112** and the second organic layer **113** so that the first organic layer **111**, the first inorganic layer **112**, the second organic layer **113**, and the second inorganic layer **114** may not be separated from each other when the glass substrate **105** is peeled off from the substrate **110**.

[0150] A buffer layer **115** may be formed or disposed on the substrate **110**. Depending on a type of the substrate **110**, at least two buffer layers **115** may be provided on the substrate **110**, or the buffer layer **115** may not be provided. In an embodiment, the buffer layer **115** may be formed or provided by a silicon compound, metal oxide, or the like.

[0151] Referring to FIG. **11**, an active layer **130** may be formed or disposed on the buffer layer **115**. The active layer **130** may include a first region a, a second region b, a third region c, a fourth region d, a first channel region ch**1**, a second channel region ch**2**, and a third channel region ch**3**. In this case, the first channel region ch**1** may be disposed between the first region a and the second region b, the second channel region ch**2** may be disposed between the second region b and the third region c, and the third channel region ch**3** may be disposed between the third region c and the fourth region d. In an embodiment, the active layer **130** may be formed or provided by a metal oxide semiconductor, an inorganic semiconductor, an organic semiconductor, or the like.

[0152] Referring to FIG. **12**, a preliminary first gate insulating layer **1150** may be formed or disposed on the buffer layer **115** and the active layer **130**. The preliminary first gate insulating layer **1150** may sufficiently cover the active layer **130** on the buffer layer **115**, and may have a substantially flat top surface without creating a step around the active layer **130**. In some embodiments, the preliminary first gate insulating layer **1150** may be formed or provided along a profile of the active layer **130** with a uniform thickness to cover the active layer **130** on the buffer layer **115**. In an embodiment, the preliminary first gate insulating layer **1150** may be formed or provided by a silicon compound, metal oxide, or the like. In an embodiment, the preliminary first gate insulating layer **1150** may include SiO_x, SiN_x, SiO_xN_y, SiO_xC_y, SiC_xN_y, AlO_x, AlN_x, TaO_x, HfO_x, ZrO_x, TiO_x, or the like, for example. In an embodiment, the preliminary first gate insulating layer **1150** may include SiO_x having a relatively low dielectric constant. According to other embodiments, the preliminary first gate insulating layer **1150** may have a multilayer structure including a plurality of insulating layers. The insulating layers may include mutually different materials from each other, and may have mutually different thicknesses from each other.

[0153] Referring to FIG. **13**, a photoresist **610** defining an opening **612** that exposes the second region b may be formed or disposed on the preliminary first gate insulating layer **1150**.

[0154] Referring to FIG. **14**, after the photoresist **610** is formed or provided, an etching process may be performed over an entire area of the substrate **110**. In an embodiment, the etching process may be a dry etching process, for example.

[0155] Referring to FIG. **15**, an opening **152** may be defined in the preliminary first gate insulating layer **1150** overlapping the second region b through the etching process. Accordingly, a first gate insulating layer **150** defining the opening **152** may be formed or provided.

[0156] Referring to FIG. **16**, after the first gate insulating layer **150** is formed or provided, a mask **620** defining an opening that overlaps the second region b may be arranged on the first gate insulating layer **150**. After the mask **620** is arranged, a deposition process may be performed over the entire area of the substrate **110**. In this case, a deposition material may include SiN_x.

[0157] Referring to FIG. **17**, an insulating pattern **165** may be formed or provided in the opening **152** through the deposition process. The opening **152** may be completely filled with the insulating pattern **165**, and a top surface of the insulating pattern **165** may not create a step with a top surface of the first gate insulating layer **150** disposed at a periphery of the opening **152**. In other words, a thickness of the insulating pattern **165** and a thickness of the first gate insulating layer **150** may be substantially equal to each other. In an embodiment, a dielectric constant of the insulating pattern **165** including SiN_x may be greater than a dielectric constant of the first gate insulating layer **150** including SiO_x. In some embodiments, the insulating pattern **165** may be formed or provided by metal oxide having a high dielectric constant. In an embodiment, the insulating pattern **165** may include AlO_x, ZrO_x, HfO_x, TiO_x, or the like, for example. In this case, the term "high dielectric constant" means that a dielectric constant K is greater or equal to 8.

[0158] Referring to FIG. **18**, a first gate electrode **180** including a first sub-gate electrode

[0159] **180*a*** and a second sub-gate electrode **180*b*** and a second gate electrode **170** may be formed or disposed on the first gate insulating layer **150**, and a gate electrode pattern **185** may be formed or disposed on the insulating pattern **165**. In other words, the first sub-gate electrode **180*a*** may overlap the first channel region ch**1**, the second sub-gate electrode **180*b*** may overlap the second channel region ch**2**,

the second gate electrode **170** may overlap the third channel region ch**3**, and the gate electrode pattern **185** may overlap the second region b.

[0160] In an embodiment, the first gate electrode **180**, the gate electrode pattern **185**, and the second gate electrode **170** may be formed or disposed in the same layer while being spaced apart from each other by the same material. In an embodiment, after a first preliminary electrode layer is formed or disposed over an entire area of the first gate insulating layer **150** and the insulating pattern **165**, the first preliminary electrode layer may be selectively etched, so that the first gate electrode **180**, the second gate electrode **170**, and the gate electrode pattern **185** may be simultaneously formed or provided in the same process, for example.

[0161] In an embodiment, each of the first gate electrode **180**, the second gate electrode **170**, and the gate electrode pattern **185** may be formed or provided by a metal, an alloy, metal nitride, conductive metal oxide, a transparent conductive material, or the like. In an embodiment, each of the first gate electrode **180**, the second gate electrode **170**, and the gate electrode pattern **185** may include Au, Ag, Al, Pt, Ni, Ti, Pd, Mg, Ca, Li, Cr, Ta, W, Cu, Mo, Sc, Nd, Ir, an aluminum-containing alloy, AlN_x, a silver-containing alloy, WN_x, a copper-containing alloy, a molybdenum-containing alloy, TiN_x, CrN_x, TaN_x, $SrRu_xO_y$, ZnO_x, ITO, SnO_x, InO_x, GaO_x, IZO, or the like, for example. These may be used alone or in any combinations with each other. According to other embodiments, each of the first gate electrode **180**, the second gate electrode **170**, and the gate electrode pattern **185** may have a multilayer structure including a plurality of metal layers. The metal layers may include mutually different materials from each other, and may have mutually different thicknesses from each other.

[0162] Referring to FIG. **19**, a second gate insulating layer **155** may be formed or disposed on the first gate insulating layer **150**, the first gate electrode **180**, the second gate electrode **170**, and the gate electrode pattern **185**. The second gate insulating layer **155** may sufficiently cover the first gate electrode **180**, the second gate electrode **170**, and the gate electrode pattern **185** on the first gate insulating layer **150**, and may have a substantially flat top surface without creating a step around the first gate electrode **180**, the second gate electrode **170**, and the gate electrode pattern **185**. In some embodiments, the second gate insulating layer **155** may be disposed along a profile of the first gate electrode **180**, the second gate electrode **170**, and the gate electrode pattern **185** with a uniform thickness to cover the first gate electrode **180**, the second gate electrode **170**, and the gate electrode pattern **185** on the first gate insulating layer **150**. In an embodiment, the second gate insulating layer **155** may be formed or provided by a silicon compound, metal oxide, or the like. According to other embodiments, the second gate insulating layer **155** may have a multilayer structure including a plurality of insulating layers. The insulating layers may include mutually different materials from each other, and may have mutually different thicknesses from each other.

[0163] A third gate electrode **175** may be formed or disposed on the second gate insulating layer **155**. In other words, the third gate electrode **175** may be formed or disposed on a portion of the second gate insulating layer **155** under which the second gate electrode **170** is disposed. In an embodiment, the third gate electrode **175** may be formed or provided by a metal, an alloy, metal nitride, conductive metal oxide, a transparent conductive material, or the like. These may be used alone or in any combinations with each other. According to other embodiments, the third gate electrode **175** may have a multilayer structure including a plurality of metal layers. The metal layers may include mutually different materials from each other, and may have mutually different thicknesses from each other.

[0164] Referring to FIG. **20**, an inter-insulating layer **190** may be formed or disposed on the second gate insulating layer **155** and the third gate electrode **175**. The inter-insulating layer **190** may sufficiently cover the third gate electrode **175** on the second gate insulating layer **155**, and may have a substantially flat top surface without creating a step around the third gate electrode **175**. In some embodiments, the inter-insulating layer **190** may be disposed along a profile of the third gate electrode **175** with a uniform thickness to cover the third gate electrode **175** on the second gate insulating layer **155**. In an embodiment, the inter-insulating layer **190** may be formed or provided by a silicon compound, metal oxide, or the like. According to other embodiments, the inter-insulating layer **190** may have a multilayer structure including a plurality of insulating layers. The insulating layers may include mutually different materials from each other, and may have mutually different thicknesses from each other.

[0165] A connection electrode **210**, a connection pattern **215**, and a power supply wire **235** may be formed or disposed on the inter-insulating layer **190** while being spaced apart from each other. In other words, the connection electrode **210** may overlap the first region a, the connection pattern **215** may overlap the second region b, and the power supply wire **235** may overlap the third region c. In an embodiment, the connection electrode **210**, the connection pattern **215**, and the power supply wire **235** may be simultaneously formed or provided in the same layer by the same material. In an embodiment, after a first contact hole defined by removing portions of the first gate insulating layer **150**, the second gate insulating layer **155**, and the inter-insulating layer **190**, a second contact hole defined by removing portions of the second gate insulating layer **155** and the inter-insulating layer **190**, and a third contact hole defined by removing a portion of the inter-insulating layer **190** are formed or provided, a second preliminary electrode layer may be formed or disposed over an entirety of the inter-insulating layer **190**, and the second preliminary electrode layer may be selectively etched, so that the connection electrode **210**, the connection pattern **215**, and the power supply wire **235** may be simultaneously formed or provided in the same process, for example. In other words, the connection electrode **210** may be connected to the first region a of the active layer **130** through the first contact hole, the connection pattern **215** may be connected to the gate electrode pattern **185** through the second contact hole, and the power supply wire **235** may be connected to the third gate electrode **175** through the third contact hole.

[0166] In an embodiment, each of the connection electrode **210**, the connection pattern **215**, and the power supply wire **235** may be formed or provided by a metal, an alloy, metal nitride, conductive metal oxide, a transparent conductive material, or the like. These may be used alone or in any combinations with each other. According to other embodiments, each of the connection electrode **210**, the connection pattern **215**, and the power supply wire **235** may have a multilayer structure including a plurality of metal layers.

The metal layers may include mutually different materials from each other, and may have mutually different thicknesses from each other.

[0167] Referring to FIG. **21**, a planarization layer **270** may be formed or disposed on the inter-insulating layer **190**, the connection pattern **215**, the power supply wire **235**, and the connection electrode **210**. The planarization layer **270** may have a relatively thick thickness to sufficiently cover the connection pattern **215**, the power supply wire **235**, and the connection electrode **210**. In this case, the planarization layer **270** may have a substantially flat top surface. In order to implement such a flat top surface of the planarization layer **270**, a planarization process may be additionally performed on the planarization layer **270**. The planarization layer **270** may be formed or provided by an organic insulating material. In an embodiment, the planarization layer **270** may include a photoresist, a polyacryl-based resin, a polyimide-based resin, a polyamide-based resin, a siloxane-based resin, an acryl-based resin, an epoxy-based resin, or the like, for example.

[0168] A lower electrode **290** may be formed or disposed on the planarization layer **270**. In an embodiment, the lower electrode **290** may be formed or provided by a metal, an alloy, metal nitride, conductive metal oxide, a transparent conductive material, or the like. These may be used alone or in any combinations with each other. According to other embodiments, the lower electrode **290** may have a multilayer structure including a plurality of metal layers. The metal layers may include mutually different materials from each other, and may have mutually different thicknesses from each other.

[0169] A pixel defining layer **310** may be formed or disposed on the planarization layer **270** and a portion of the lower electrode **290**. In other words, the pixel defining layer **310** may expose a portion of the lower electrode **290**. The pixel defining layer **310** may be formed or provided by an organic insulating material.

[0170] Referring to FIG. **22**, a light emitting layer **330** may be formed or disposed on the lower electrode **290**. The light emitting layer **330** may have a multilayer structure including an EML, a HIL, a HTL, an ETL, an EIL, or the like. The EML of the light emitting layer **330** may be formed or provided by at least one of light emitting materials for emitting different color lights (i.e., a red light, a green light, a blue light, etc.) according to sub-pixels. In an alternative embodiment, the EML of the light emitting layer **330** may be formed or provided by stacking a plurality of light emitting materials for generating different color lights such as a red light, a green light, and a blue light to emit a white light as a whole.

[0171] An upper electrode **340** may be formed or disposed on the light emitting layer **330**. In an embodiment, the upper electrode **340** may be formed or provided by a metal, an alloy, metal nitride, conductive metal oxide, a transparent conductive material, or the like. These may be used alone or in any combinations with each other. According to other embodiments, the upper electrode **340** may have a multilayer structure including a plurality of metal layers. In an embodiment, the metal layers may include mutually different materials from each other, and may have mutually different thicknesses from each other, for example.

[0172] Accordingly, a light emitting structure **200** including the lower electrode **290**, the light emitting layer **330**, and the upper electrode **340** may be formed or provided.

[0173] A first inorganic thin film encapsulation layer **451** may be formed or disposed on the upper electrode **340**. In an embodiment, the first inorganic thin film encapsulation layer **451** may be formed or provided along a profile of the upper electrode **340**, for example. The first inorganic thin film encapsulation layer **451** may be formed or provided by an inorganic insulating material having flexibility.

[0174] An organic thin film encapsulation layer **452** may be formed or disposed on the first inorganic thin film encapsulation layer **451**. The organic thin film encapsulation layer **452** may be formed or provided by an organic insulating material having flexibility.

[0175] A second inorganic thin film encapsulation layer **453** may be formed or disposed on the organic thin film encapsulation layer **452**. The second inorganic thin film encapsulation layer **453** may be formed or provided along a profile of the organic thin film encapsulation layer **452** with a uniform thickness to cover the organic thin film encapsulation layer **452**. The second inorganic thin film encapsulation layer **453** may be formed or provided by an inorganic insulating material having flexibility.

[0176] Accordingly, a thin film encapsulation structure **450** including the first inorganic thin film encapsulation layer **451**, the organic thin film encapsulation layer **452**, and the second inorganic thin film encapsulation layer **453** may be formed or provided.

[0177] Referring to FIG. **9**, after the thin film encapsulation structure **450** is formed or provided, the glass substrate **105** may be removed from the substrate **110**.

[0178] Accordingly, the display device **100** shown in FIGS. **1** to **9** may be manufactured.

[0179] According to the method of manufacturing the display device of the embodiments of the invention, since the gate electrode pattern **185**, the first gate electrode **180**, and the second gate electrode **170** are simultaneously formed or provided in the same process, a manufacturing cost of the display device may be relatively reduced.

[0180] FIG. **23** is a cross-sectional view showing an embodiment of a display device according to the invention. A display device **500** illustrated in FIG. **23** may have a configuration that is substantially identical or similar to the configuration of the display device **100** described with reference to FIGS. **1** to **9** except for a shape of the first gate insulating layer **150**. In FIG. **23**, redundant descriptions of components that are substantially identical or similar to the components described with reference to FIGS. **1** to **9** will be omitted.

[0181] Referring to FIG. **23**, the display device **500** may include a substrate **110**, a buffer layer **115**, a gate electrode pattern **185**, a driving transistor **250**, a dual gate transistor DGT, a storage capacitor **259**, a first gate insulating layer **150**, a second gate insulating layer **155**, an inter-insulating layer **190**, a connection pattern **215**, a power supply wire **235**, a connection electrode **210**, a planarization layer **270**, a light emitting structure **200**, a pixel defining layer **310**, a thin film encapsulation structure **450**, or the like.

[0182] The first gate insulating layer **150** may be disposed on the buffer layer **115** and an active layer **130**. In an embodiment, the first gate insulating layer **150** may be disposed over an entirety of the active layer **130** to cover the active layer **130**.

[0183] According to a conventional display device, in order to further reduce a leakage current, a BML has been added to a common region of a dual gate transistor (e.g., the

first node N1 of FIG. **2** or the second region b of FIG. **8**), for example. In this case, a capacitor may be formed or provided in the BML and the common region. In this case, the BML may be disposed between a buffer layer and a second barrier layer, and a thickness of the buffer layer may be approximately **3500** angstroms. Since a distance between the BML and the common region is relatively great, a capacitance of the capacitor may be relatively small. When the capacitance of the capacitor is small, the leakage current may not be significantly reduced, so that the conventional display device may not be driven at a low frequency.

[0184] In the embodiments, when a thickness of the first gate insulating layer **150** is smaller than a thickness of the buffer layer **115**, a capacitance of a capacitor CAP may be relatively increased. Accordingly, a leakage current may be reduced in the second region b, and the display device **500** may be driven at a low frequency. According to other embodiments, the first gate insulating layer **150** may include metal oxide having a high dielectric constant. In this case, the capacitance of the capacitor CAP may be further increased.

[0185] FIG. **24** is a cross-sectional view showing an embodiment of a display device according to the invention. A display device **600** illustrated in FIG. **24** may have a configuration that is substantially identical or similar to the configuration of the display device **100** described with reference to FIGS. **1** to **9** except for a shape of the insulating pattern **165**. In FIG. **24**, redundant descriptions of components that are substantially identical or similar to the components described with reference to FIGS. **1** to **9** will be omitted.

[0186] Referring to FIG. **24**, the display device **600** may include a substrate **110**, a buffer layer **115**, a gate electrode pattern **185**, a driving transistor **250**, a dual gate transistor DGT, a storage capacitor **259**, a first gate insulating layer **150**, an insulating pattern **165**, a second gate insulating layer **155**, an inter-insulating layer **190**, a connection pattern **215**, a power supply wire **235**, a connection electrode **210**, a planarization layer **270**, a light emitting structure **200**, a pixel defining layer **310**, a thin film encapsulation structure **450**, or the like.

[0187] The first gate insulating layer **150** may be disposed on the buffer layer **115** and an active layer **130**. In an embodiment, a groove **152** that overlaps a second region b may be defined in the first gate insulating layer **150**. In an embodiment, the groove **152** may not overlap a first sub-gate electrode **180***a* and a second sub-gate electrode **180***b*, and may overlap the gate electrode pattern **185**, for example.

[0188] The insulating pattern **165** may be disposed in the groove **152** on the active layer **130**. The groove **152** may be completely filled with the insulating pattern **165**, and a top surface of the insulating pattern **165** may not form a step with a top surface of the first gate insulating layer **150** disposed at a periphery of the groove **152**. In an embodiment, a bottom surface of the insulating pattern **165** may contact the first gate insulating layer **150**, and the top surface of the insulating pattern **165** may contact a bottom surface of the gate electrode pattern **185**.

[0189] In an embodiment, the insulating pattern **165** may include a silicon compound, metal oxide, or the like. In an embodiment, the insulating pattern **165** may include SiN_x having a relatively high dielectric constant. In some embodiments, the insulating pattern **165** may include metal oxide having a high dielectric constant. In an embodiment, the insulating pattern **165** may include AlO_x, ZrO_x, HfO_x, TiO_x, or the like, for example.

[0190] In an embodiment, as shown in FIGS. **13**, **14**, and **15**, in a process of defining an opening **152** of the first gate insulating layer **150**, while an etching process is performed to expose a second region b of the active layer **130**, a preliminary first gate insulating layer **1150** disposed in the second region b may be excessively etched, for example, so that the second region b of the active layer **130** may be damaged.

[0191] In an embodiment, in order to prevent the second region b of the active layer **130** from being damaged in the etching process, only a portion of the preliminary first gate insulating layer **1150** disposed in the second region b may be removed so as not to expose the second region b of the active layer **130**, so that the groove **152** may be defined in the first gate insulating layer **150**. Accordingly, the display device **600** may function as a display device capable of reducing defects in the second region b of the active layer **130**.

[0192] FIG. **25** is a cross-sectional view showing an embodiment of a display device according to the invention. A display device **700** illustrated in FIG. **25** may have a configuration that is substantially identical or similar to the configuration of the display device **100** described with reference to FIGS. **1** to **9** except for the shape of the first gate insulating layer **150**. In FIG. **25**, redundant descriptions of components that are substantially identical or similar to the components described with reference to FIGS. **1** to **9** will be omitted.

[0193] Referring to FIG. **25**, the display device **700** may include a substrate **110**, a buffer layer **115**, a gate electrode pattern **185**, a driving transistor **250**, a dual gate transistor DGT, a storage capacitor **259**, a first gate insulating layer **150**, a second gate insulating layer **155**, an inter-insulating layer **190**, a connection pattern **215**, a power supply wire **235**, a connection electrode **210**, a planarization layer **270**, a light emitting structure **200**, a pixel defining layer **310**, a thin film encapsulation structure **450**, or the like.

[0194] The first gate insulating layer **150** may be disposed on the buffer layer **115** and an active layer **130**. In an embodiment, a groove **152** that overlaps a second region b may be defined in the first gate insulating layer **150**. In an embodiment, the groove **152** may not overlap a first sub-gate electrode **180***a* and a second sub-gate electrode **180***b*, and may overlap the gate electrode pattern **185**, for example.

[0195] The gate electrode pattern **185** may be disposed inside the groove **152**. The gate electrode pattern **185** may be spaced apart from the first gate electrode **180**. In an embodiment, since the gate electrode pattern **185** is disposed inside the groove **152**, the gate electrode pattern **185** may be disposed in a layer that is different from a layer in which the first gate electrode **180** and the second gate electrode **170** are disposed. In addition, the gate electrode pattern **185** may contact the first gate insulating layer **150**.

[0196] In an embodiment, since the gate electrode pattern **185** is disposed inside the groove **152** of the first gate insulating layer **150**, a distance between the gate electrode pattern **185** and the second region b of the active layer **130** may be relatively reduced. Accordingly, a capacitance of a capacitor CAP may be relatively increased, and a leakage current may be further reduced in the second region b.

[0197] FIG. **26** is a circuit diagram showing an embodiment of a display device according to the invention. A

display device **800** illustrated in FIG. **26** may include a sub-pixel SP having a configuration that is substantially identical or similar to the configuration of the sub-pixel SP of the display device **100** described with reference to FIG. **2** except for a second capacitor CAP**2**. In FIG. **26**, redundant descriptions of components that are substantially identical or similar to the components described with reference to FIG. **2** will be omitted.

[0198] Referring to FIG. **26**, a sub-pixel SP may be disposed in each of sub-pixel areas **20** of the display device **800**. The sub-pixel SP may include a sub-pixel circuit SPC and an organic light emitting diode OLED. In this case, the sub-pixel circuit SPC may include first to seventh transistors TR**1**, TR**2**, TR**3_1**, TR**3_2**, TR**4_1**, TR**4_2**, TR**5**, TR**6**, and TR**7**, a storage capacitor CST, a first capacitor CAP**1**, a second capacitor CAP**2**, wires, or the like, and the wires may include a wire to which a first power supply voltage ELVDD is applied, a wire to which a second power supply voltage ELVSS is applied, a wire to which an initialization voltage VINT is applied, a wire to which a data signal DATA is applied, a wire to which a gate signal GW is applied, a wire to which a gate initialization signal GI is applied, a wire to which an emission control signal EM is applied, a wire to which a diode initialization signal GB is applied, or the like. In addition, the sub-pixel circuit SPC may further include an active layer (e.g., the active layer **130** of FIG. **3**) which connects the first to seventh transistors TR**1**, TR**2**, TR**3_1**, TR**3_2**, TR**4_1**, TR**4_2**, TR**5**, TR**6**, and TR**7**, the storage capacitor CST, the first capacitor CAP**1**, the second capacitor CAP**2**, or the like to each other.

[0199] The first capacitor CAP**1** may include a first terminal and a second terminal. The first capacitor CAP**1** may be connected between a first power supply voltage (ELVDD) wire and the third transistors TR**3_1** and TR**3_2** (e.g., to the first node N**1**). In an embodiment, the first terminal of the first capacitor CAP**1** may be connected to a second terminal of the third transistor TR**3_1** and a first terminal of the third transistor TR**3_2**, and the second terminal of the first capacitor CAP**1** may be connected to the first power supply voltage (ELVDD) wire, for example.

[0200] The second capacitor CAP**2** may include a first terminal and a second terminal. The second capacitor CAP**2** may be connected between the first power supply voltage (ELVDD) wire and the fourth transistors TR**4_1** and TR**4_2** (e.g., to a second node N**2**). In an embodiment, the first terminal of the second capacitor CAP**2** may be connected to a first terminal of the fourth transistor TR**4_1** and a second terminal of the fourth transistor TR**4_2**, and the second terminal of the second capacitor CAP**2** may be connected to the first power supply voltage (ELVDD) wire, for example.

[0201] A gate signal (GW) wire, a gate initialization signal (GI) wire, a data signal (DATA) wire, or the like may be disposed at a periphery of the second node N**2**, and a voltage of the second node N**2** may fluctuate due to voltage variations of the gate signal (GW) wire, the gate initialization signal (GI) wire, and the data signal (DATA) wire. In an embodiment, the second node N**2** and the second capacitor CAP**2** may be connected to each other, so that a voltage fluctuation at the second node N**2** that may be caused by the voltage variations of the gate signal (GW) wire, the gate initialization signal (GI) wire, and the data signal (DATA) wire disposed at a periphery of the second node N**2** may be reduced.

[0202] Embodiments of the invention may be applied to various electronic devices including a display device. In an embodiment, the invention may be applied to numerous electronic devices such as vehicle-display devices, ship-display devices, aircraft-display devices, portable communication devices, exhibition display devices, information transfer display devices, medical-display devices, etc., for example.

[0203] The foregoing is illustrative of embodiments and is not to be construed as limiting thereof. Although a few embodiments have been described, those skilled in the art will readily appreciate that many modifications are possible in the embodiments without materially departing from the novel teachings and advantages of the invention. Accordingly, all such modifications are intended to be included within the scope of the invention as defined in the claims. Therefore, it is to be understood that the foregoing is illustrative of various embodiments and is not to be construed as limited to the particular embodiments disclosed, and that modifications to the disclosed embodiments, as well as other embodiments, are intended to be included within the scope of the appended claims.

What is claimed is:

1. A display device comprising:

a substrate including a sub-pixel area;

an active layer disposed in the sub-pixel area on the substrate, the active layer including:

first, second, and third regions;

a first channel region disposed between the first and second regions; and

a second channel region disposed between the second and third regions;

a first gate electrode disposed in the first and second channel regions on the active layer, and constituting a dual gate transistor together with the first and second regions and the first channel region and together with the second and third regions and the second channel region;

a first gate insulating layer disposed between the active layer and the first gate electrode, and including a groove defined in the second region of the active layer;

a gate electrode pattern overlapping the groove, and constituting a capacitor together with the second region; and

a light emitting structure disposed on the dual gate transistor and the gate electrode pattern.

2. The display device of claim **1**, wherein the gate electrode pattern is disposed inside the groove, and contacts the first gate insulating layer.

3. The display device of claim **1**, further comprising an insulating pattern disposed in the groove.

4. The display device of claim **3**, wherein the gate electrode pattern contacts a first surface of the insulating pattern opposite to a second surface of the insulating pattern facing the substrate.

5. A method of manufacturing a display device, the method comprising:

forming a substrate including a sub-pixel area;

forming an active layer including first, second, third, and fourth regions, a first channel region disposed between the first and second regions, a second channel region disposed between the second and third regions, and a third channel region disposed between the third and fourth regions in the sub-pixel area on the substrate;

forming a first gate insulating layer defining an opening which exposes the second region of the active layer;

forming an insulating pattern in the opening;

simultaneously forming a first gate electrode in the first and second channel regions and a gate electrode pattern in the second region on the first gate insulating layer; and

forming a light emitting structure on the first gate electrode and the gate electrode pattern.

6. The method of claim **5**, wherein the forming the first gate insulating layer defining the opening which exposes the second region of the active layer includes:

forming a preliminary first gate insulating layer on the active layer;

forming a photoresist defining an opening which exposes the second region on the preliminary first gate insulating layer; and

performing an etching process over an entirety of the substrate.

7. The method of claim **5**, wherein the forming the insulating pattern in the opening includes:

arranging a mask defining an opening which overlaps the second region on the first gate insulating layer; and

performing a deposition process over of an entirety of the substrate.

8. The method of claim **5**, wherein a dielectric constant of the insulating pattern is greater than a dielectric constant of the first gate insulating layer.

9. The method of claim **5**, further comprising forming a second gate electrode in the third channel region on the active layer, which is performed simultaneously with the simultaneously forming the first gate electrode in the first and second channel regions and the gate electrode pattern in the second region on the first gate insulating layer,

wherein the first gate electrode, the gate electrode pattern, and the second gate electrode are disposed in a same layer.

* * * * *