US 20250282446A1

(19) United States

(12) Patent Application Publication

Reinbold et al.

(10) Pub. No.: US 2025/0282446 A1

(43) Pub. Date: Sep. 11, 2025

(54) **SHIFTING BICYCLE CHAIN HAVING UNIFORM OFFSET CHAIN LINKS, AND CHAIN WHEEL ASSEMBLY COOPERATING THEREWITH**

(71) Applicant: **SRAM DEUTSCHLAND GmbH**, SCHWEINFURT (DE)

(72) Inventors: **Matthias Reinbold**, Wuerzburg (DE); **Sebastian Andres**, Baiersdorf (DE); **Pedro Miguel Santos dos Nunes**, Coimbra (PT); **Luis Miguel Figueiredo Mendes**, Antanhol (PT); **Carlos Joao Santos Miquelao**, Vila Franca de Xira (PT); **MATTHEW BUSH**, SAN LUIS OBISPO, CA (US)

(73) Assignee: **SRAM DEUTSCHLAND GmbH**, SCHWEINFURT (DE)

(21) Appl. No.: **19/218,599**

(22) Filed: **May 26, 2025**

Related U.S. Application Data

(63) Continuation-in-part of application No. 18/956,650, filed on Nov. 22, 2024.

(30) **Foreign Application Priority Data**

Nov. 24, 2023 (DE) 10 2023 132 911.1
Oct. 2, 2024 (DE) 10 2024 128 669.5

Publication Classification

(51) **Int. Cl.**
B62M 9/00 (2006.01)
F16G 13/06 (2006.01)

(52) **U.S. Cl.**
CPC ***B62M 9/00*** (2013.01); ***F16G 13/06*** (2013.01); *B62M 2009/005* (2013.01)

(57) **ABSTRACT**

A bicycle chain having a plurality of chain links, the chain plates of which are formed and arranged in an offset manner along a longitudinal chain path such that each chain link has a wider longitudinal end, along the transverse chain axis, with a larger link width and a narrower longitudinal end, opposite the wider longitudinal end along the longitudinal chain path, with a smaller link width, is designed for shifting between two coaxial rear sprockets adjacent along the transverse chain axis and/or between two coaxial front chainrings adjacent along the transverse chain axis.

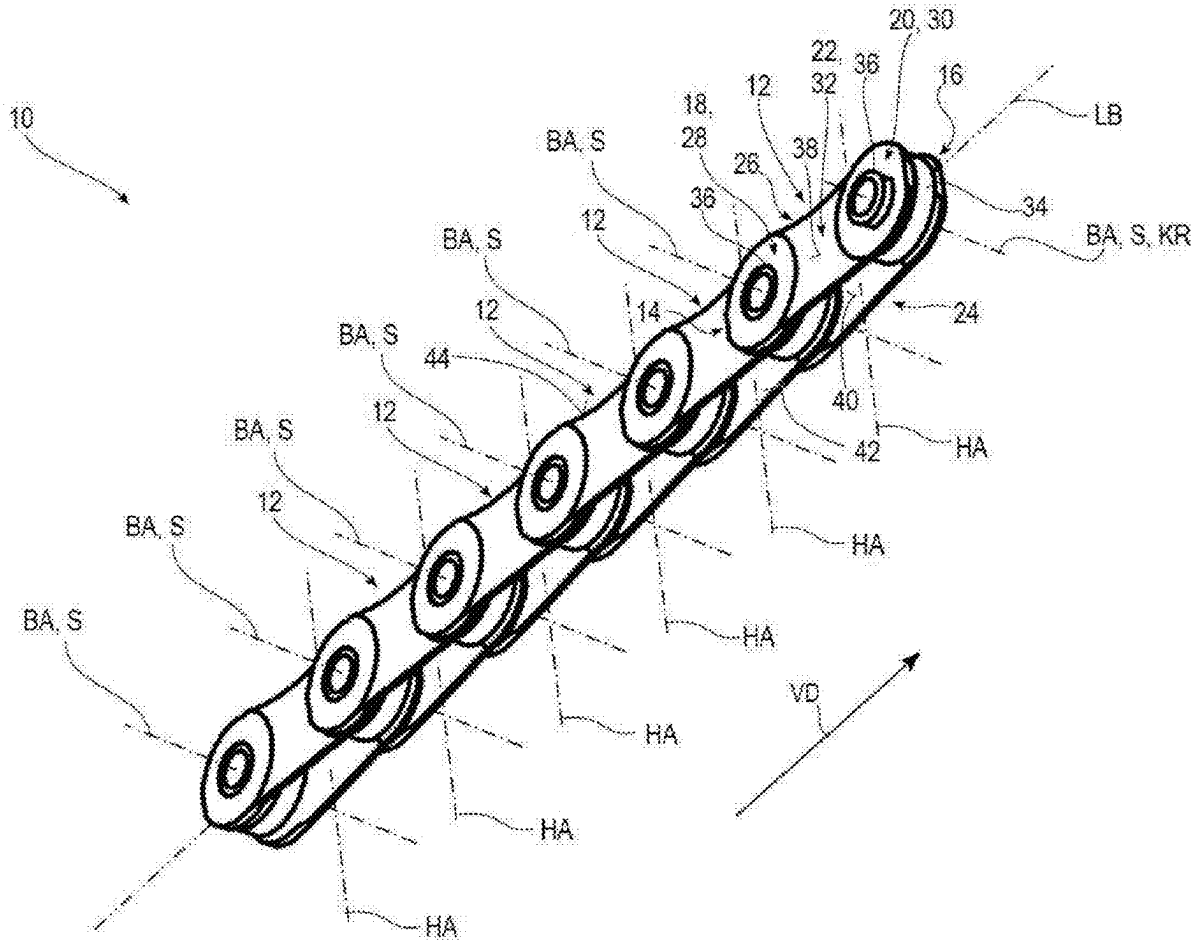

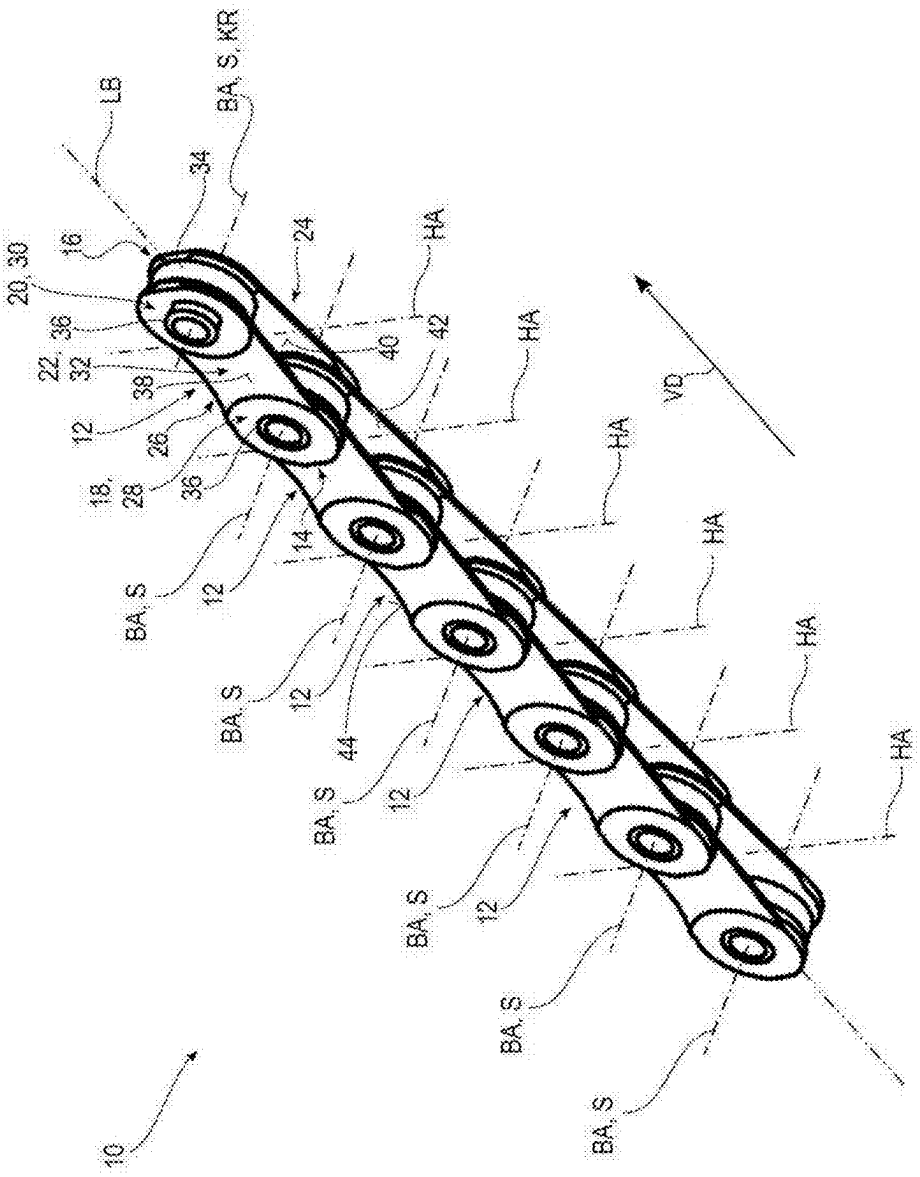
10
20, 30
16
LB
34
BA, S, KR
22, 36
32
38
12
18, 28
26
36
BA, S
12
14
24
40
42
HA
HA
HA
HA
HA
HA
VD
BA, S
12
44
BA, S
12
BA, S
12
BA, S
BA, S

Fig. 1

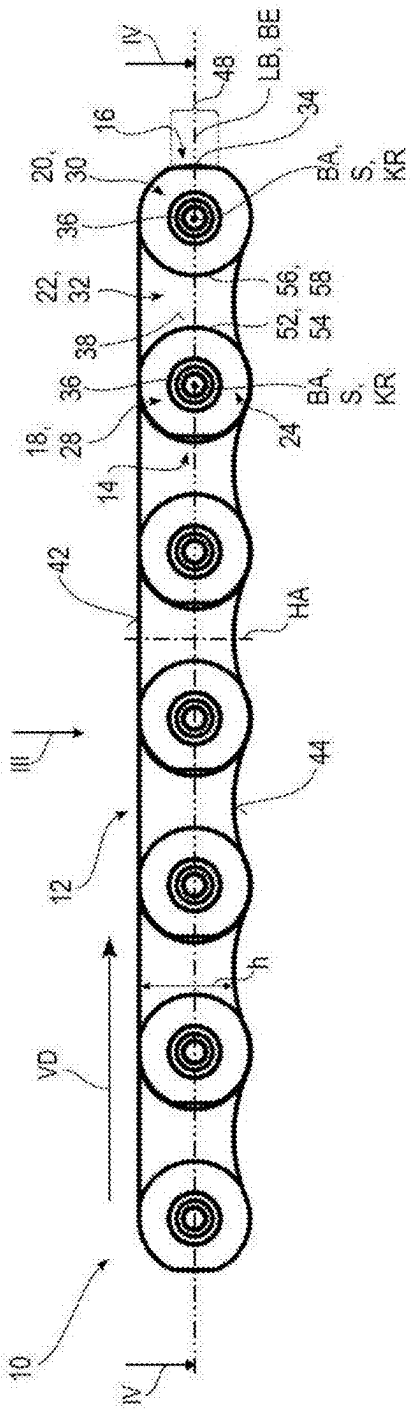
10
IV
VD
h
12
III
44
42
HA
14
18, 28
36
38
22, 32
20, 30
16
IV
46
LB, BE
34
BA, S, KR
24
52, 54
56, 58

Fig. 2

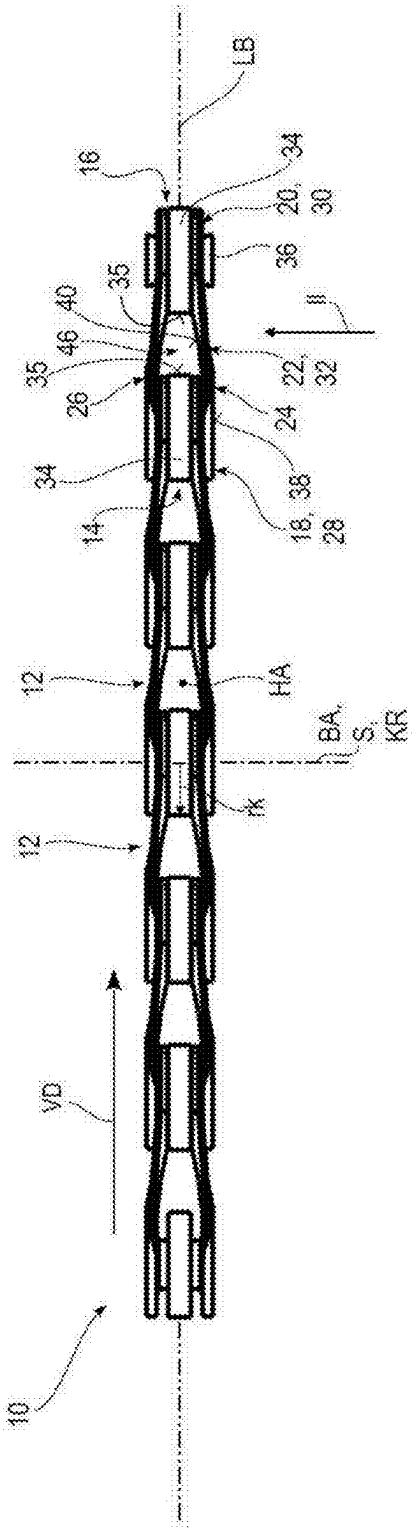
10
VD
12
12
HA
BA, S, KR
h
14
34
18, 38
28
24
26
35
46
40
35
22, 32
II
36
20, 30
34
16
LB

Fig. 3

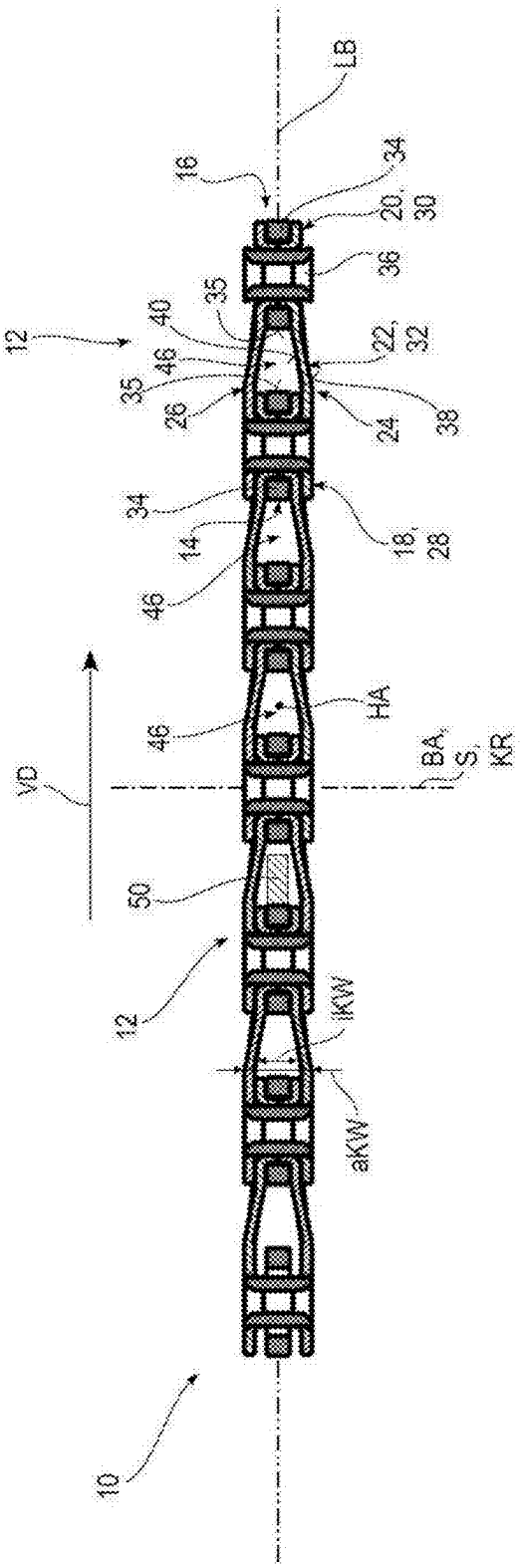
LB
16
34
20,
30
36
35
40
12
46
22,
32
35
26
24
38
34
14
18,
28
46
HA
46
BA,
S,
KR
VD
50
12
IKW
aKW
10

Fig. 4

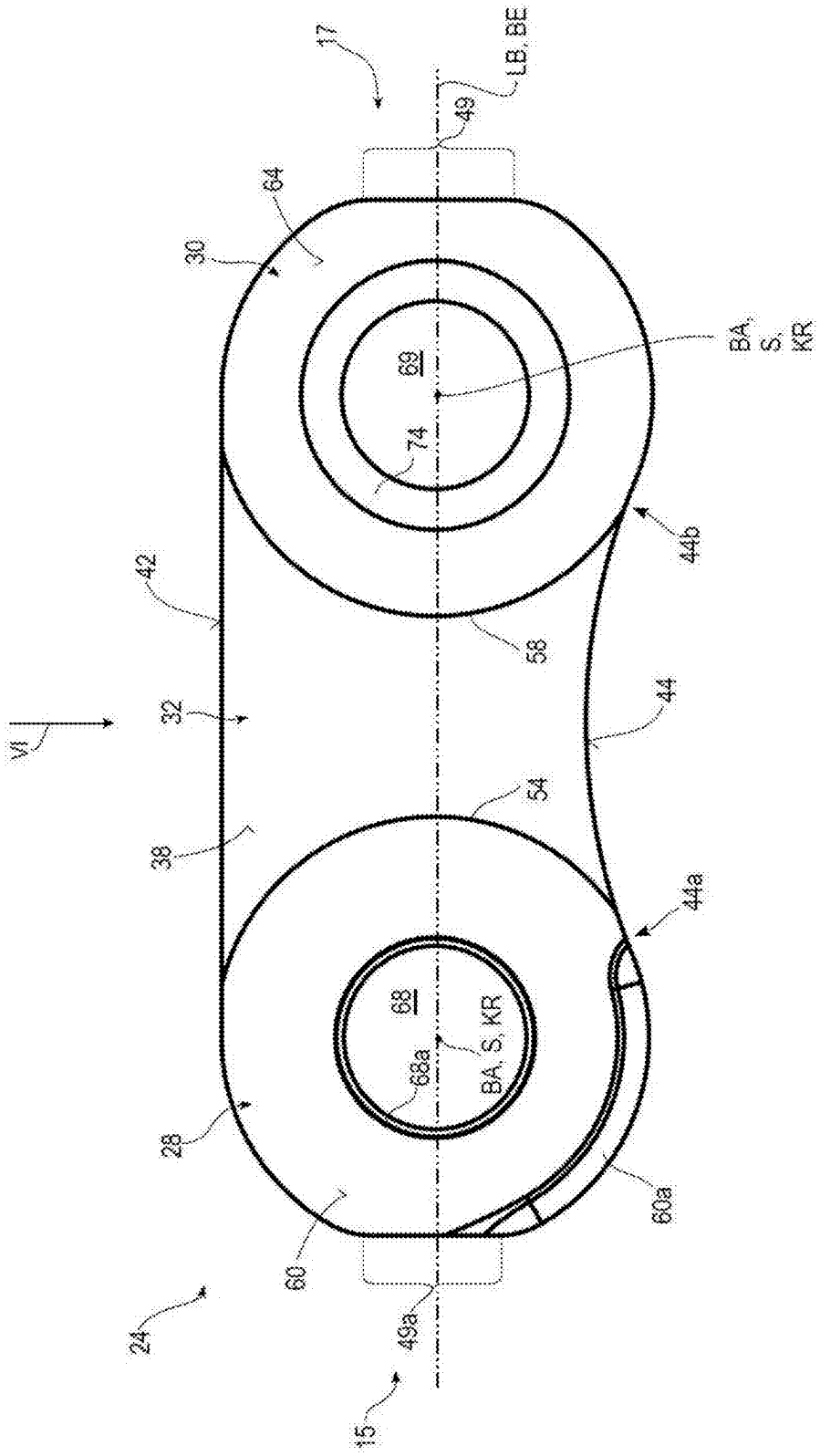
17
LB, BE
49
64
30
68
BA,
S,
KR
74
44b
42
58
VI
32
44
38
54
44a
68
68a
BA, S, KR
28
60a
60
24
49a
15

Fig. 5

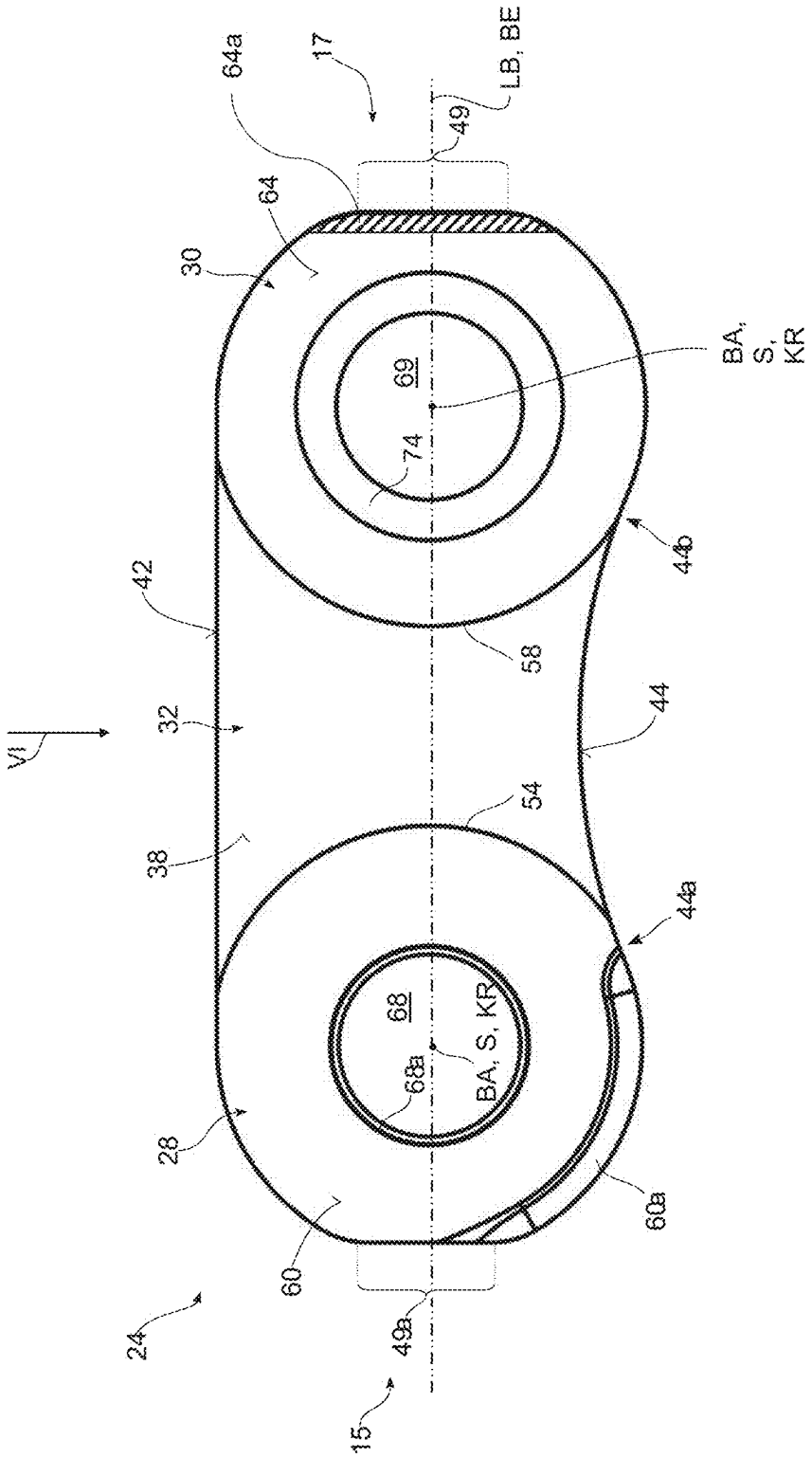
64a
17
LB, BE
49
64
30
69
BA,
S,
KR
74
44b
42
58
32
VI
44
54
38
44a
68
BA, S, KR
68a
28
60a
60
24
49a
15

Fig. 5A

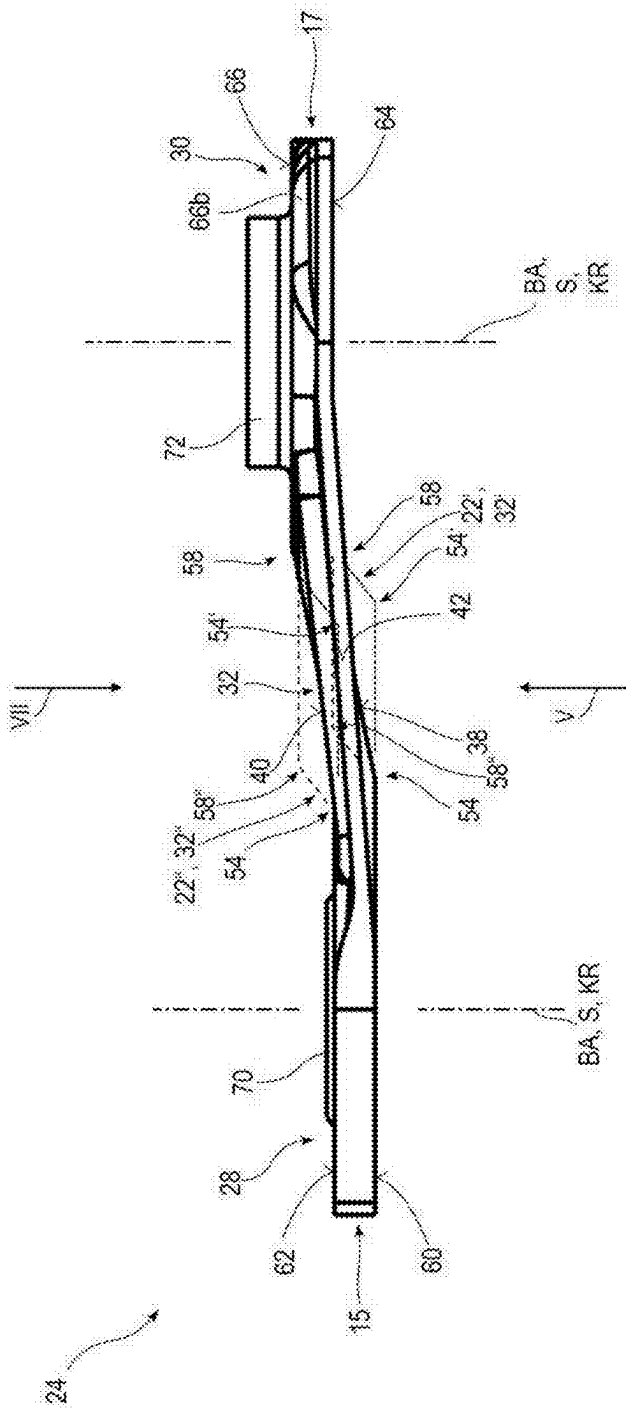
17
66
30
66b
64
BA,
S,
KR
72
58
58
22',
32'
54'
54'
42
VII
32
V
38
40
58"
58"
54
22', 32'
54
BA, S, KR
70
28
62
60
15
24

Fig. 6

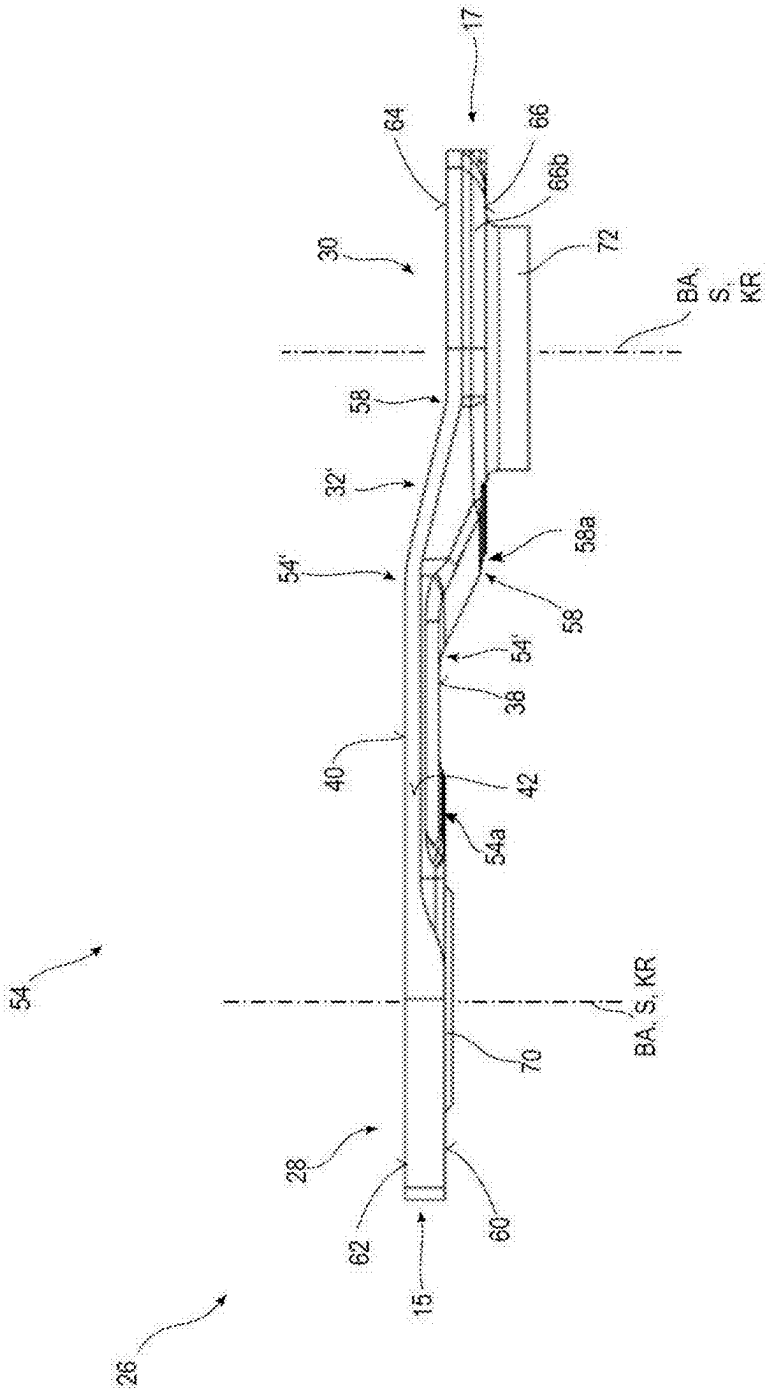
17
64
66
66b
30
72
BA, S, KR
58
32'
58a
54'
58
54'
38
40
42
54a
54
BA, S, KR
70
28
62
60
15
26

Fig. 6A

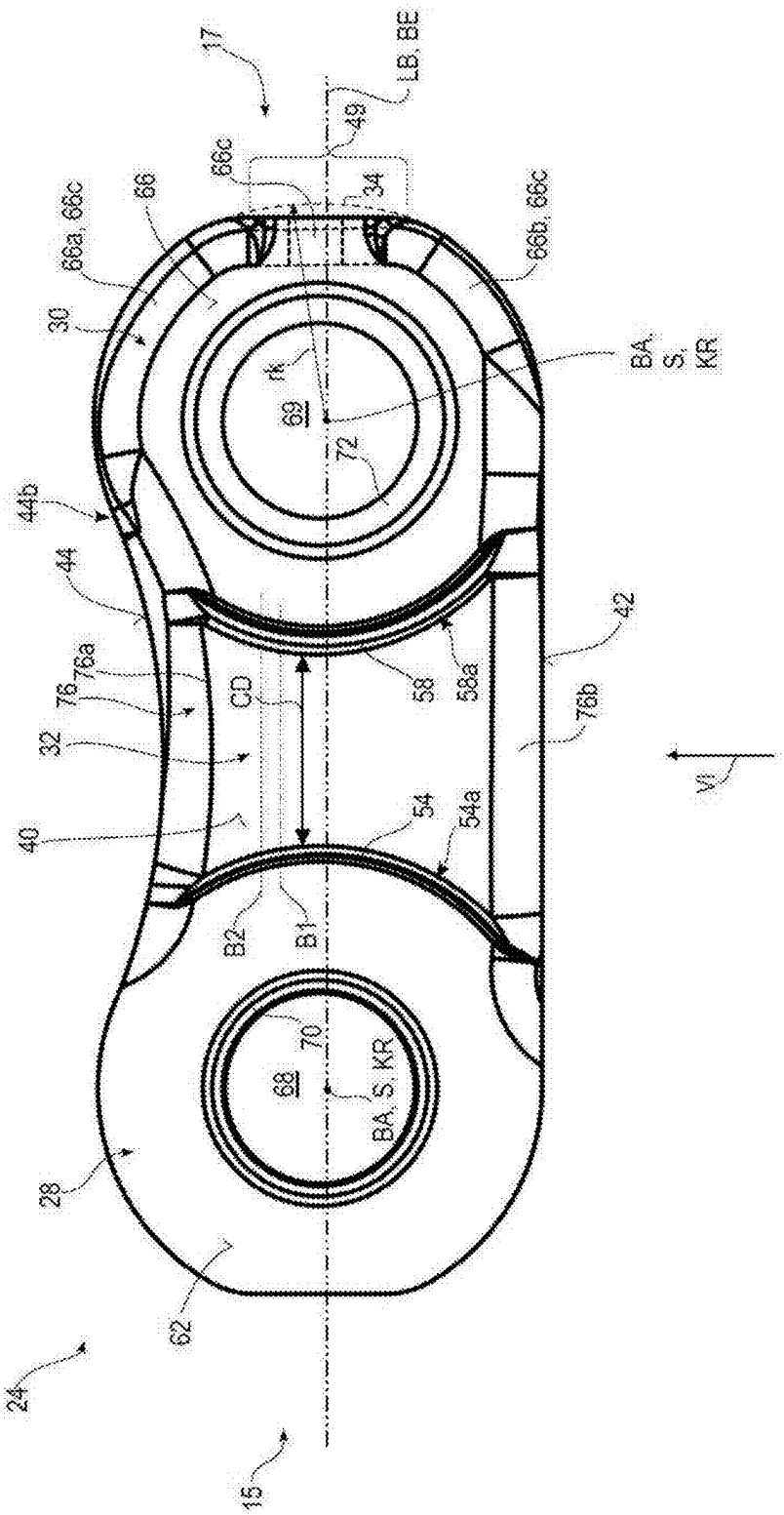
17
LB, BE
49
66c
34
66a, 66c
66
66b, 66c
30
BA, S, KR
69
72
44b
44
42
76a
76
CD
58
58a
76b
32
VI
40
54
54a
B2
B1
70
68
BA, S, KR
28
62
24
15

Fig. 7

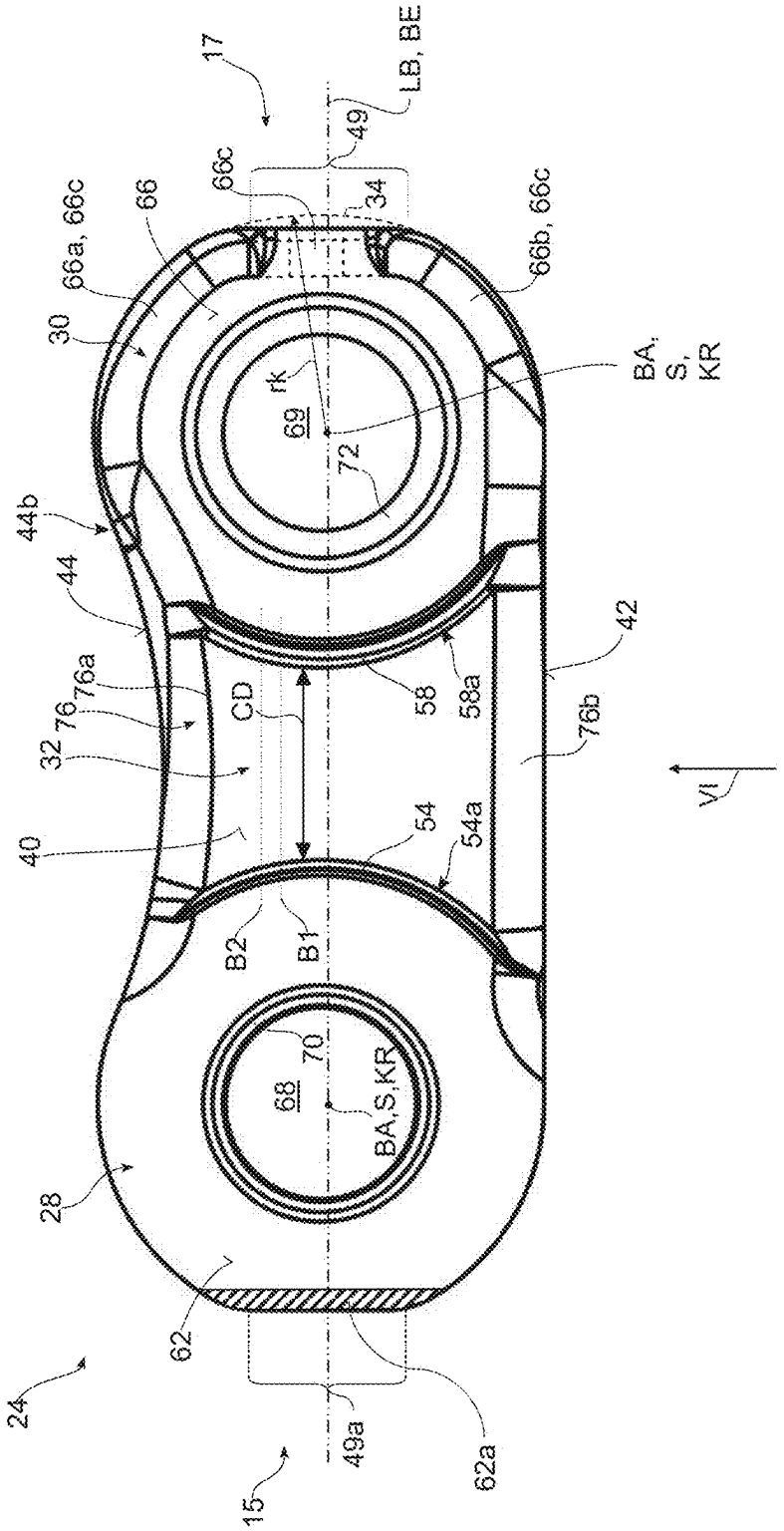
17
LB, BE
49
66c
34
66a, 66c
66
66b, 66c
30
rk
69
BA,
S,
KR
72
44b
44
42
76a
CD
58
58a
76
32
76b
VI
40
54
54a
B2
B1
70
68
BA,S,KR
28
62
24
49a
62a
15

Fig. 7A

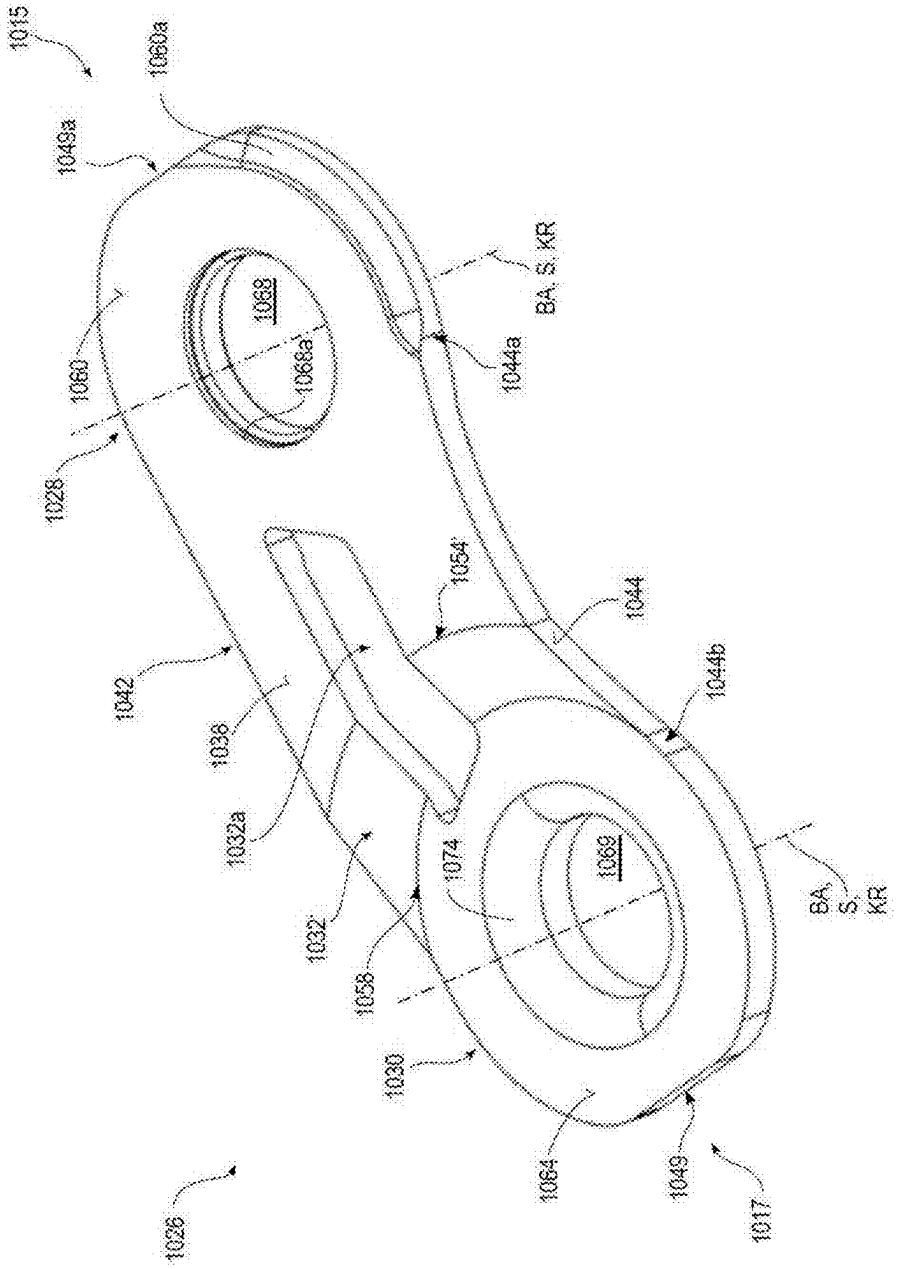
1015
1060a
1049a
1068
1068a
1060
1028
BA, S, KR
1044a
1054
1044
1042
1044b
1038
1032a
1074
1069
BA
S
KR
1032
1058
1030
1064
1049
1017
1026

Fig. 7B

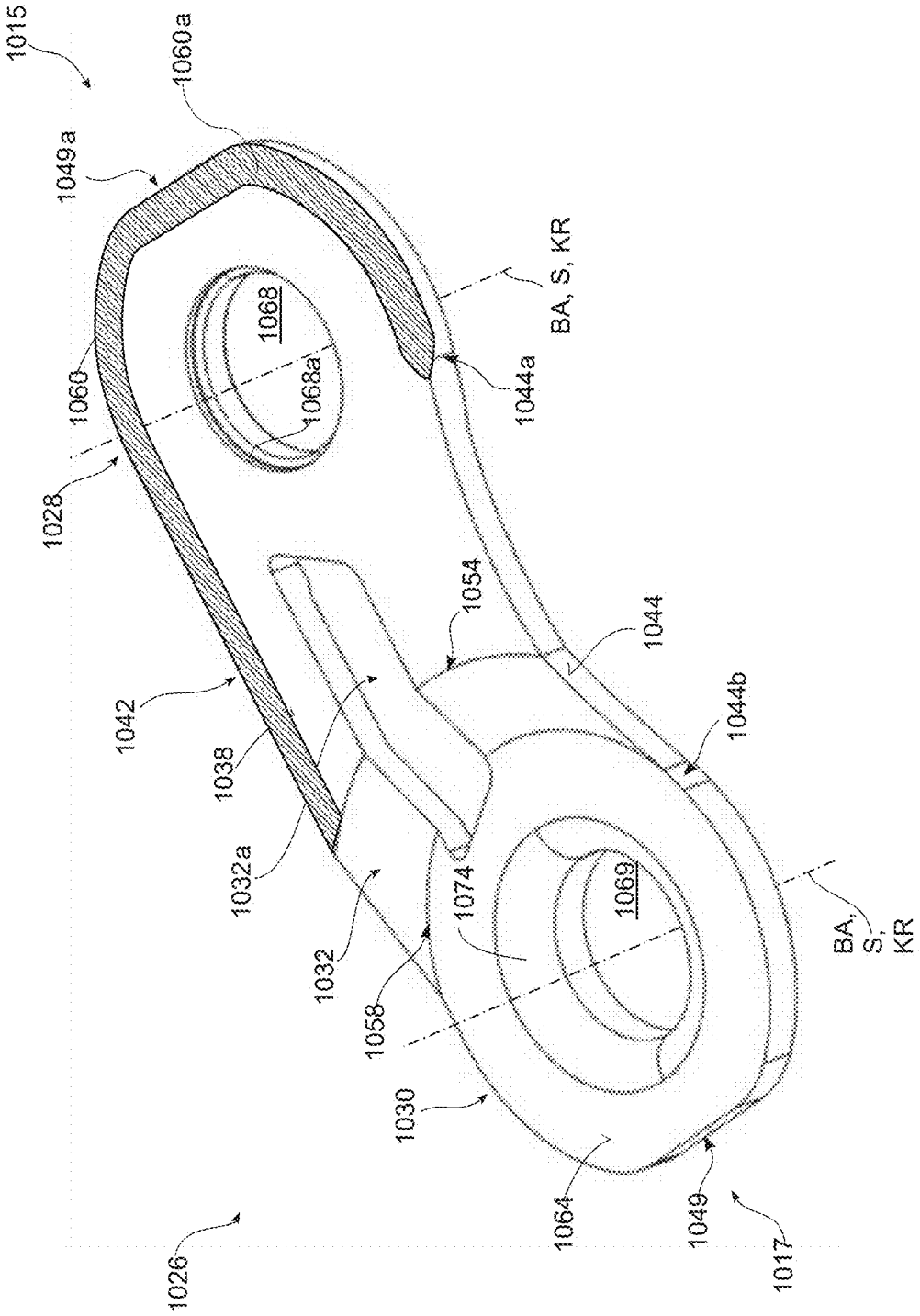
1015
1060a
1049a
1060
1028
1068
1068a
BA, S, KR
1044a
1054
1044
1042
1038
1044b
1032a
1074
1069
1032
1058
BA, S, KR
1030
1064
1049
1017
1026

Fig. 7C

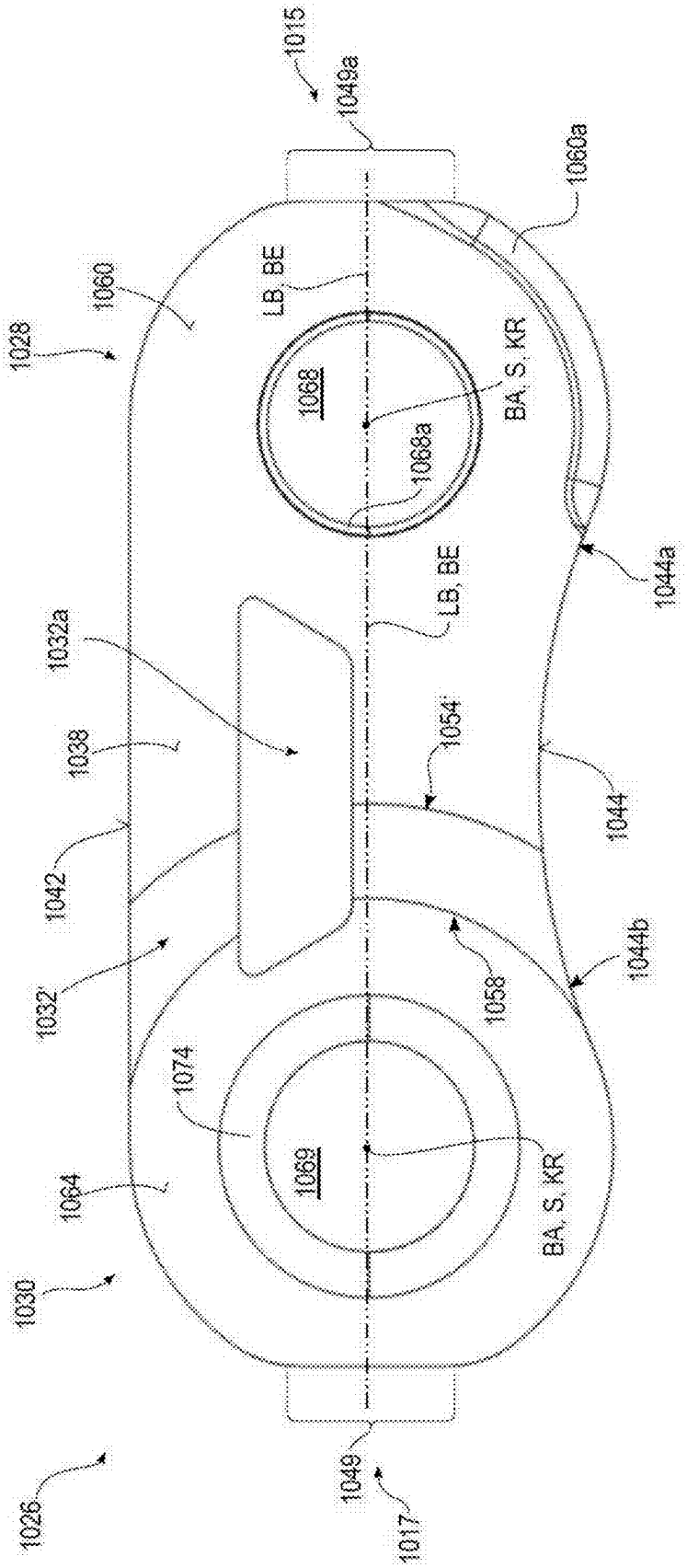
1015
1049a
1060a
1060
1028
LB, BE
1068
BA, S, KR
1068a
LB, BE
1044a
1032a
1038
1054
1044
1042
1032
1058
1044b
1074
1069
BA, S, KR
1064
1030
1026
1049
1017

Fig. 7D

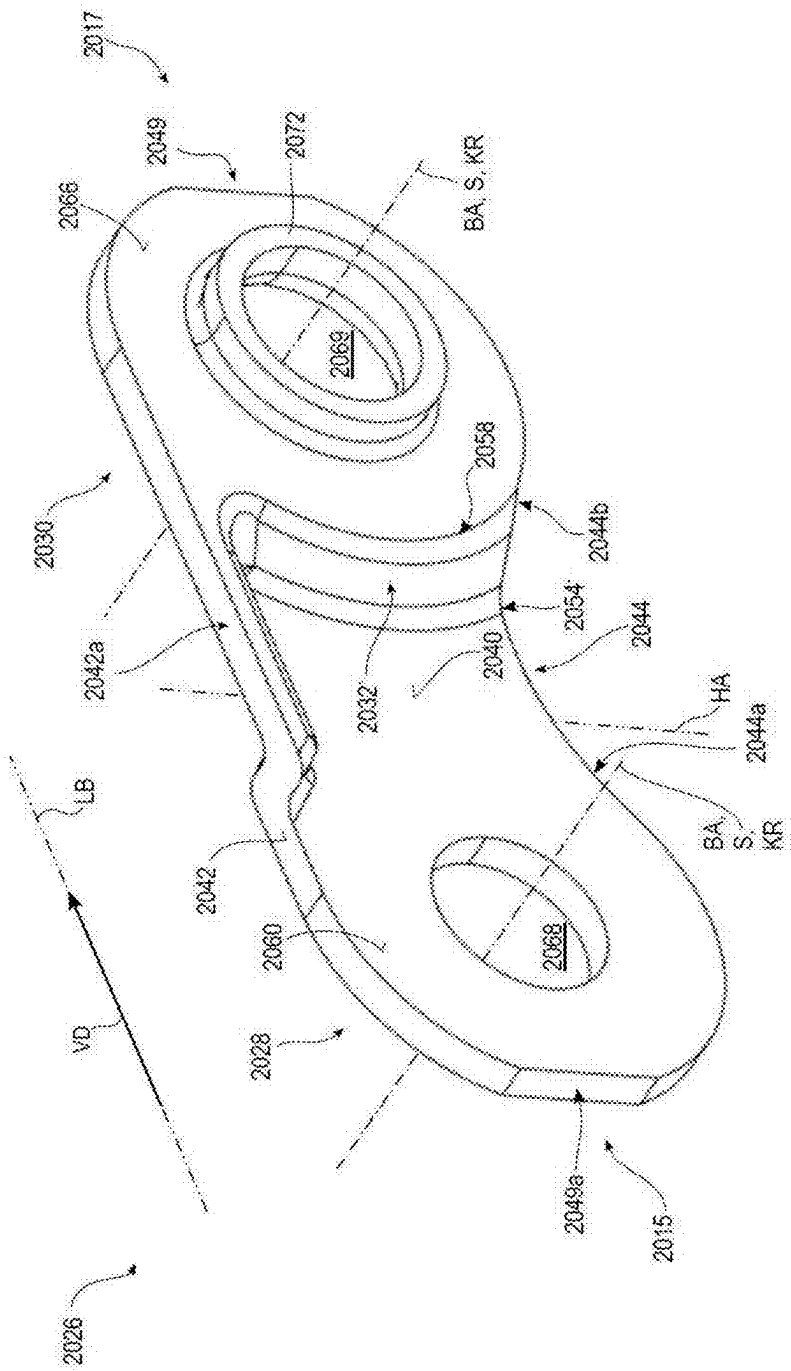
2017
2049
2066
2072
BA, S, KR
2069
2030
2058
2044b
2042a
2054
2044
2032
2040
HA
2044a
LB
BA
S
KR
2042
2060
2068
VD
2028
2049a
2015
2026

Fig. 7E

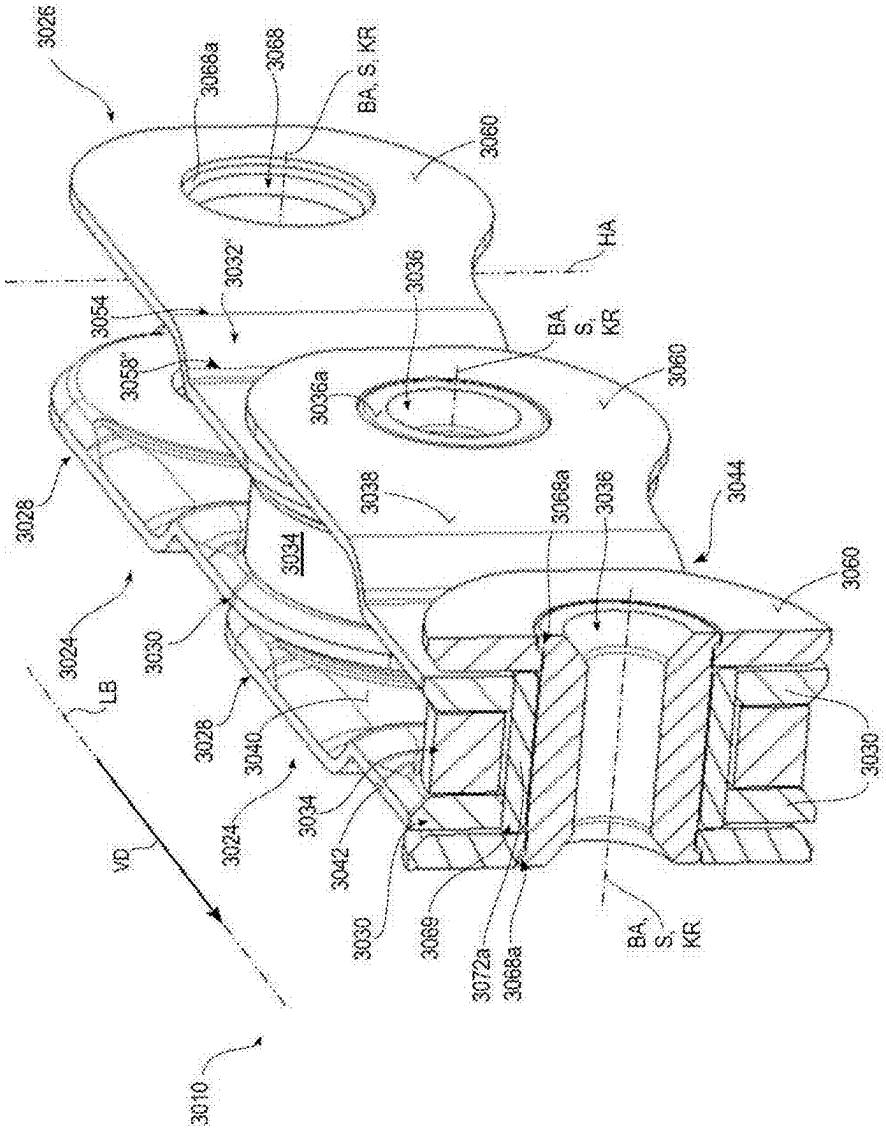
3026
3068a
3068
BA, S, KR
3080
3032'
3054
3058"
3036
HA
BA
S,
KR
3060
3036a
3028
3038
3068a
3036
3044
3034
3060
3024
3030
LB
3028
3040
3034
3024
3042
VD
3030
3069
3072a
3068a
BA
S,
KR
3030
3010

Fig. 7F

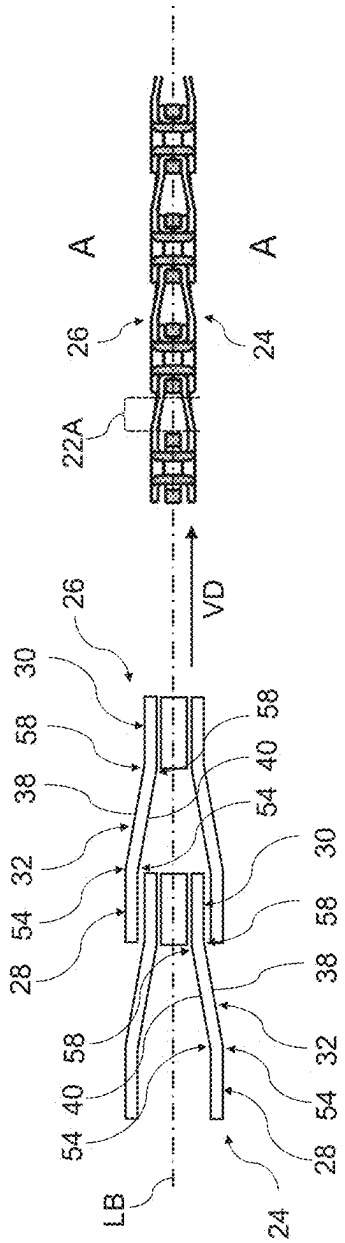
A
A
26
24
22A
VD
26
30
58
38
32
54
28
58
40
54
30
58
38
32
54
28
58
40
54
LB
24

Fig. 8A

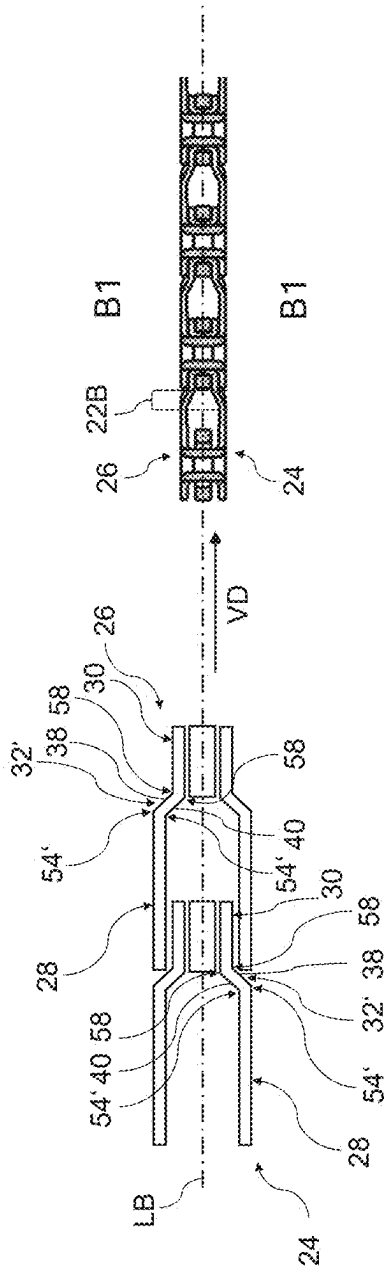
B1
B1
22B
26
24
VD
26
30
58
38
32'
54'
28
58
40
54'
30
58
38
32'
54'
28
58
40
54'
LB
24

Fig. 8B

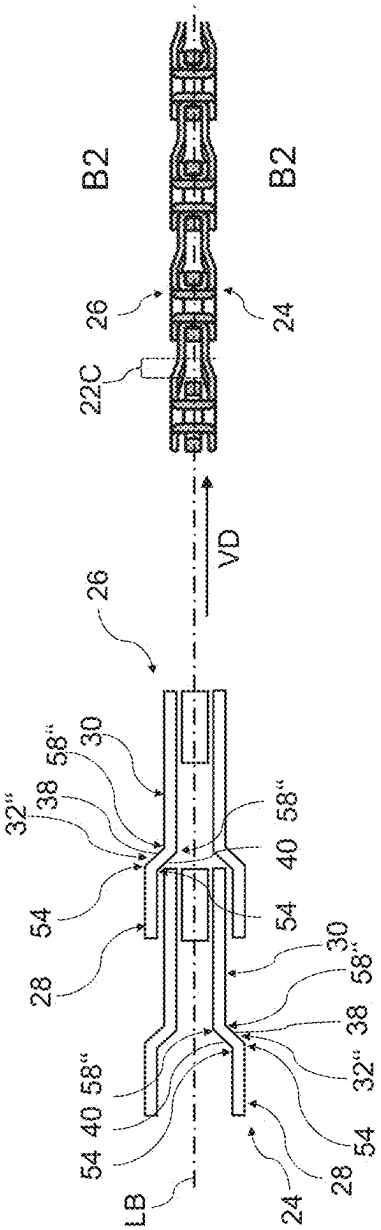
B2
B2
22C
26
24
VD
26
32''
38
58''
30
54
28
58''
40
54
30
58''
38
32''
54
28
54
40
58''
LB
24

Fig. 8C

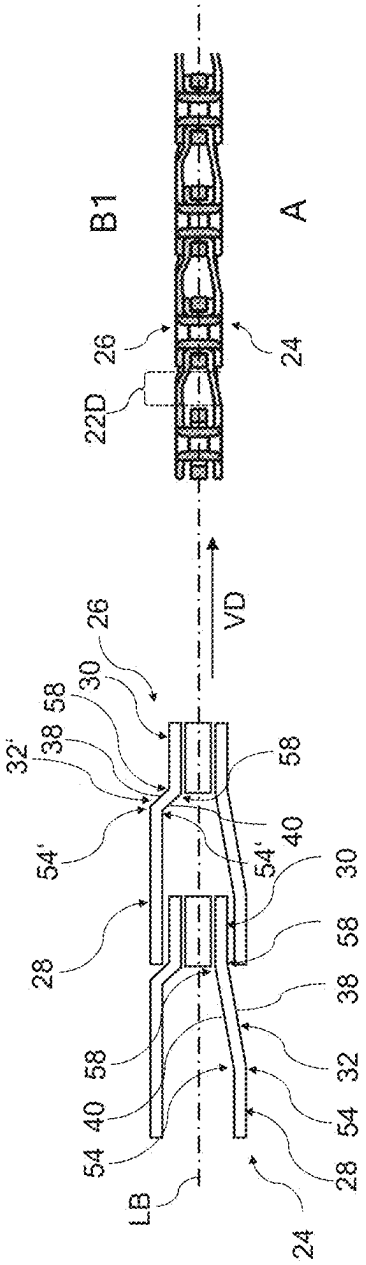
B1
A
22D
26
24
VD
26
32'
38
58
30
54'
28
58
40
54'
30
58
38
58
32
40
54
54
28
LB
24

Fig. 8D

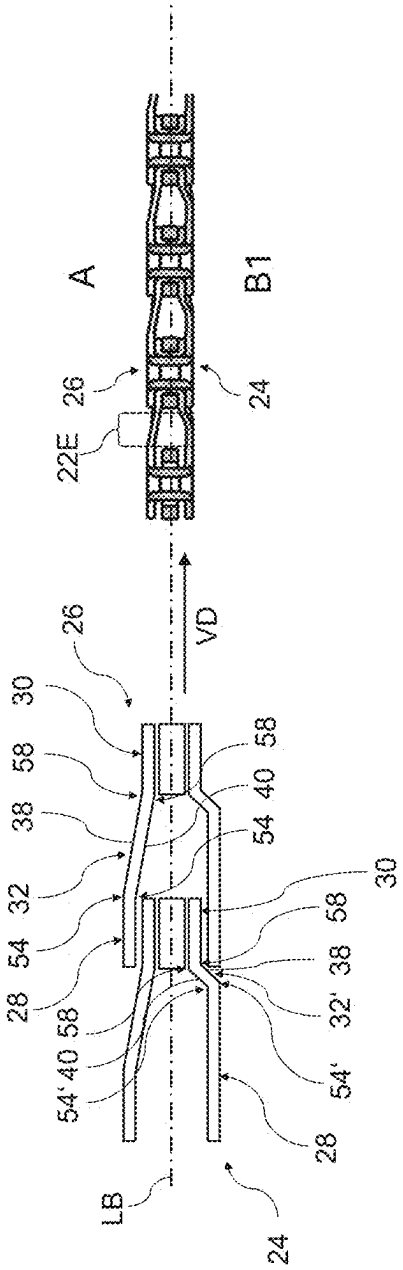
A
B1
22E
26
24
VD
26
30
58
38
32
54
28
58
40
54'
LB
24
58
40
54
30
58
38
32'
54'
28

Fig. 8E

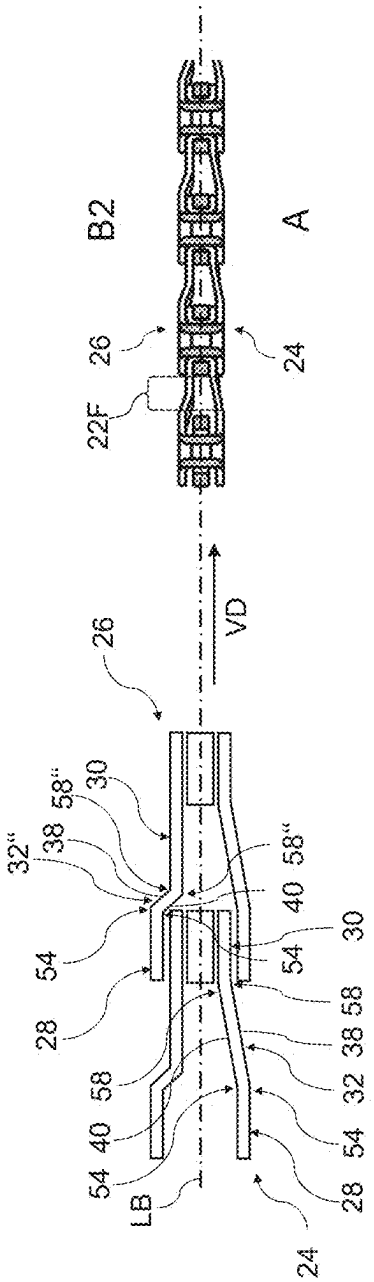
B2
A
22F
26
24
VD
26
32"
38
58"
30
54
28
58
40
54
LB
24
58"
40
30
54
58
38
32
54
28

Fig. 8F

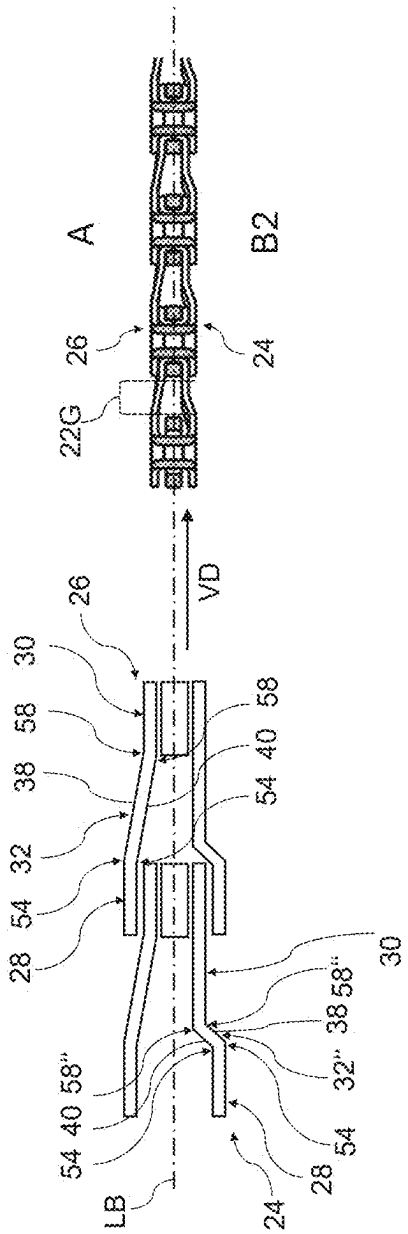
A
B2
22G
26
24
VD
26
30
58
38
32
54
28
58
40
54
30
58"
38
32"
54
28
24
54
40
58"
LB

Fig. 8G

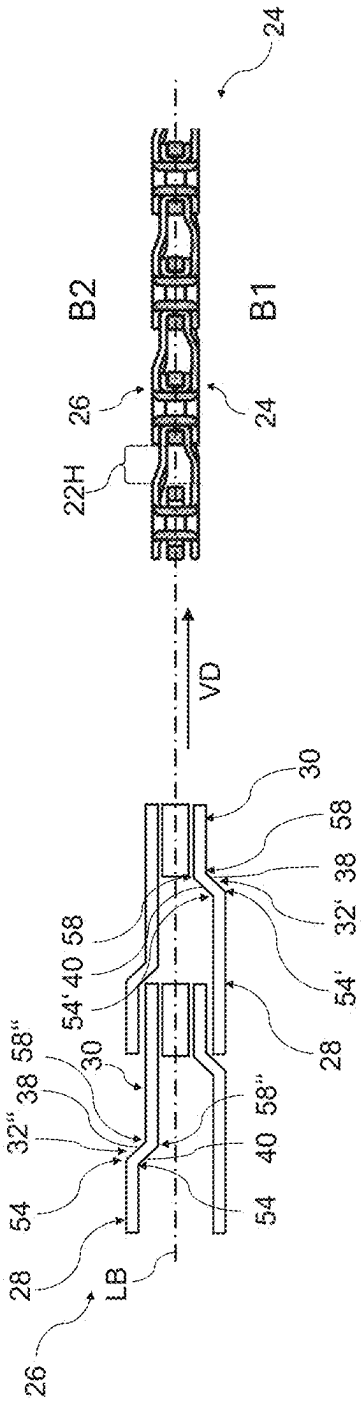
24
B2
B1
26
24
22H
VD
30
58
38
32'
54'
28
58
40
54'
58"
30
38
32"
54
28
LB
26
58"
40
54

Fig. 8H

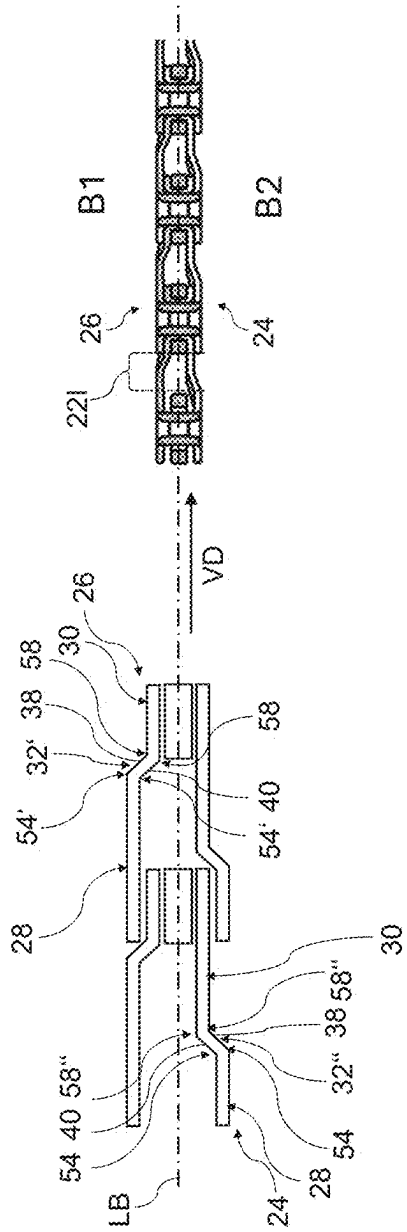
B1
B2
22l
26
24
VD
26
30
58
38
32'
54'
28
58
40
54'
30
58''
38
32''
54
28
24
LB
54
40
58''

Fig. 8l

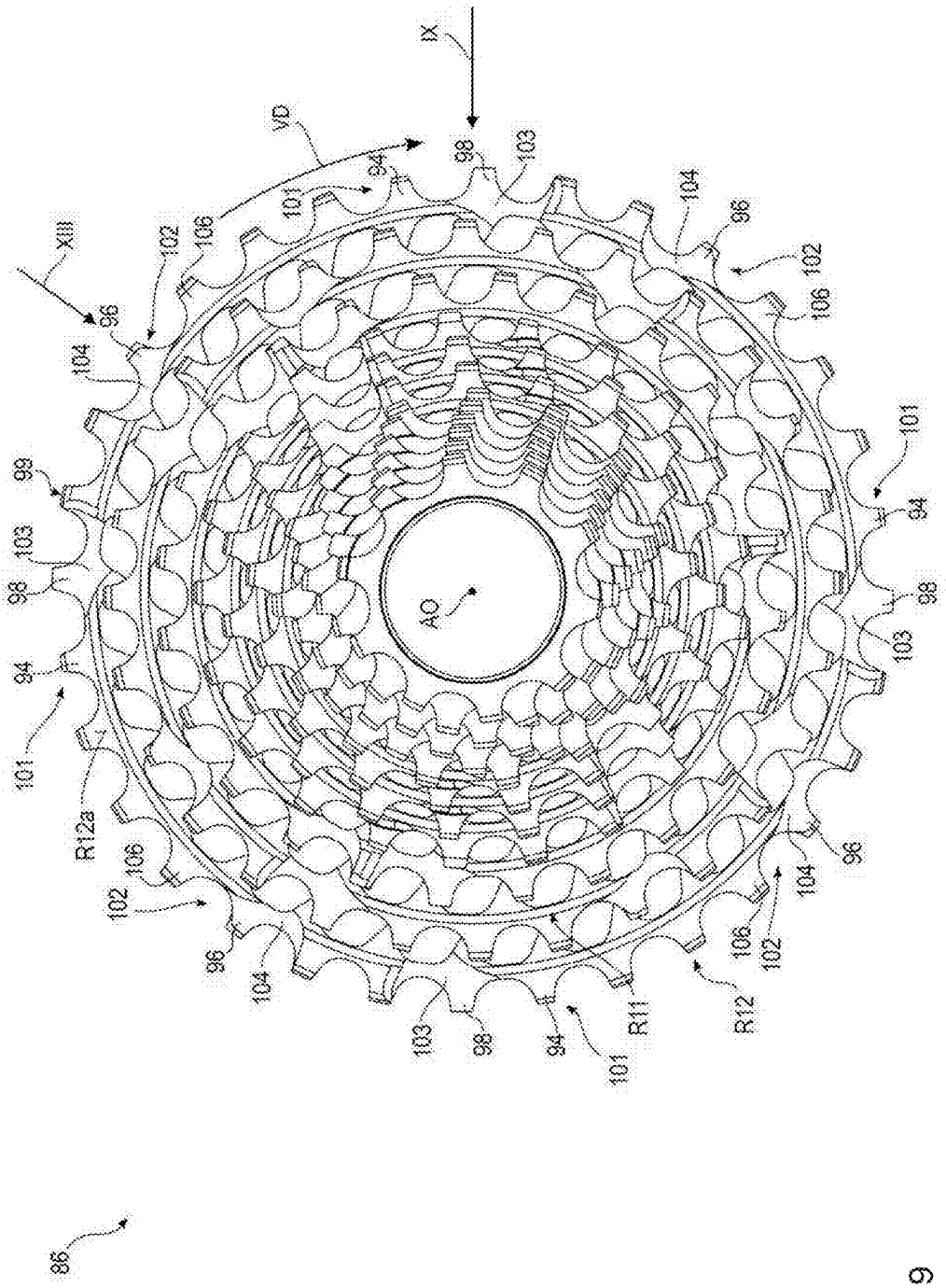

Fig. 9

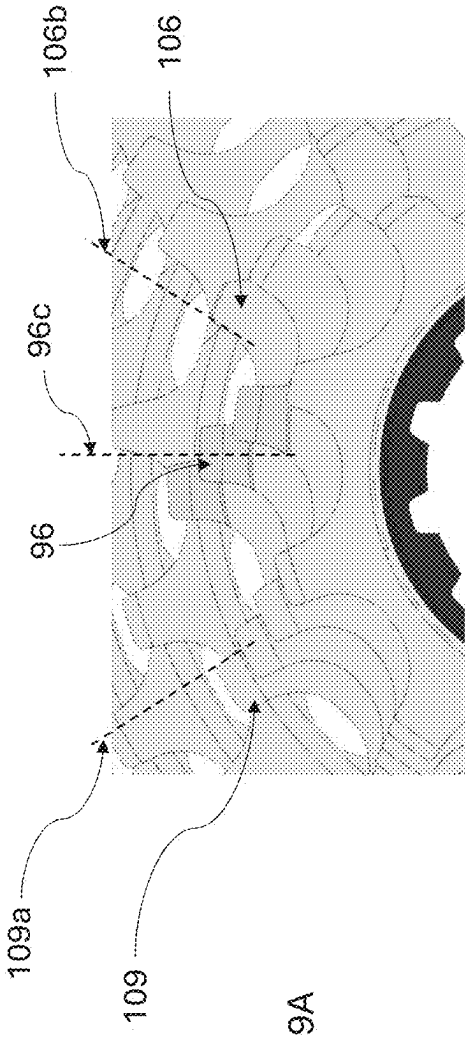

Fig. 9A

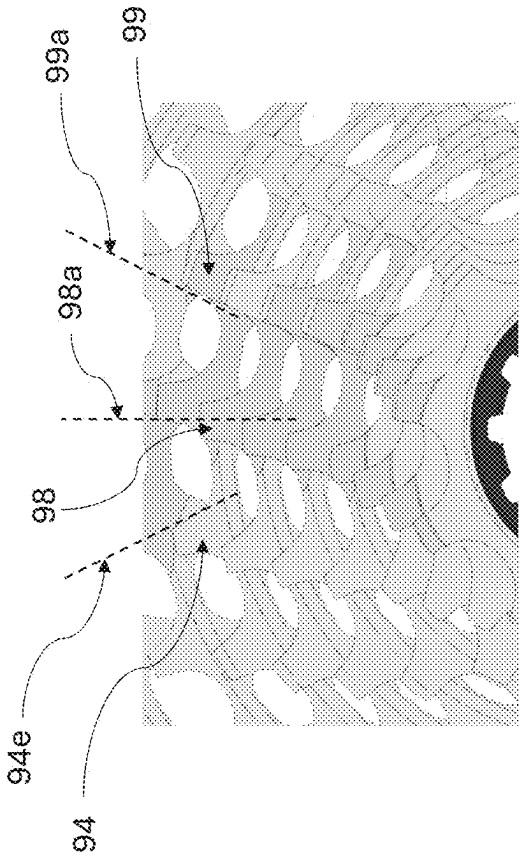

Fig. 9B

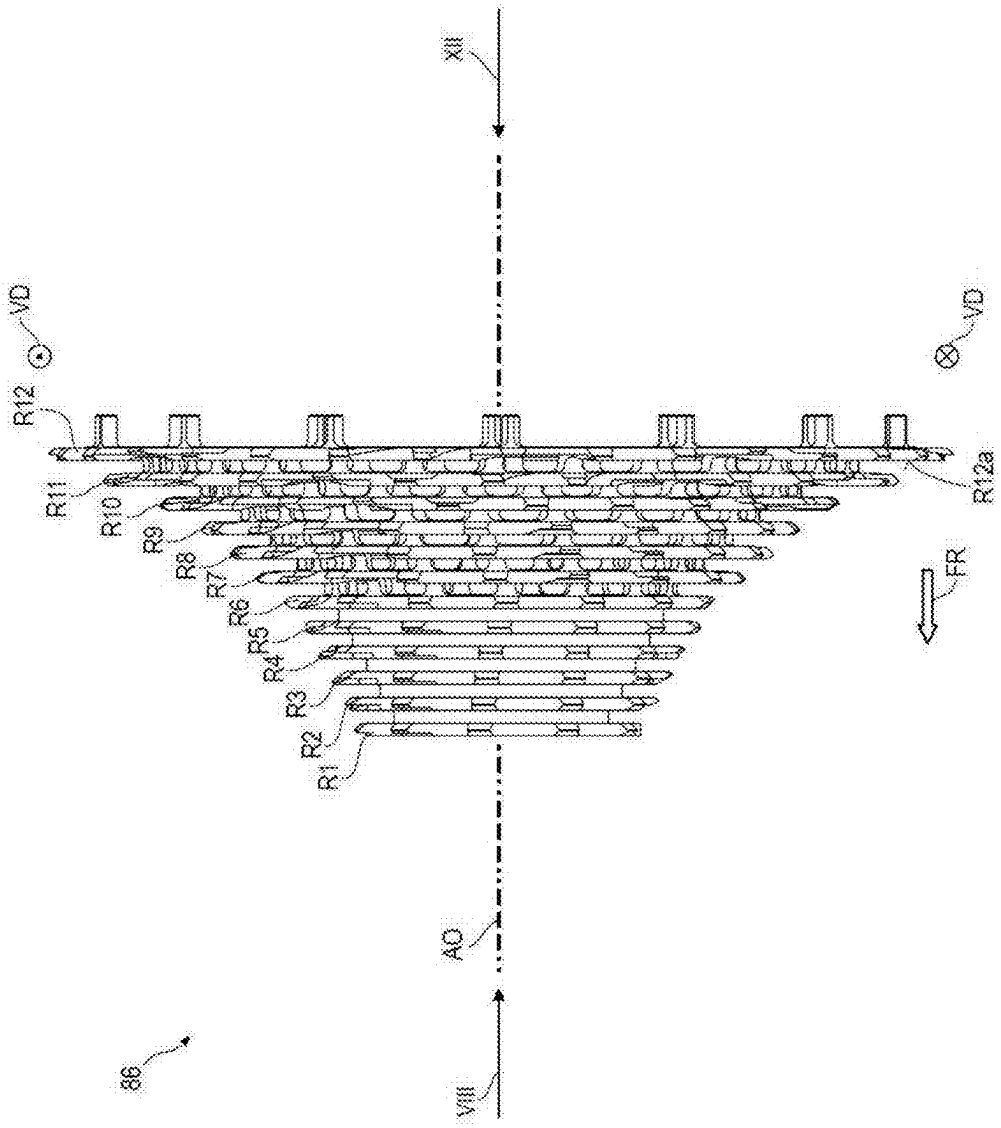

Fig. 10

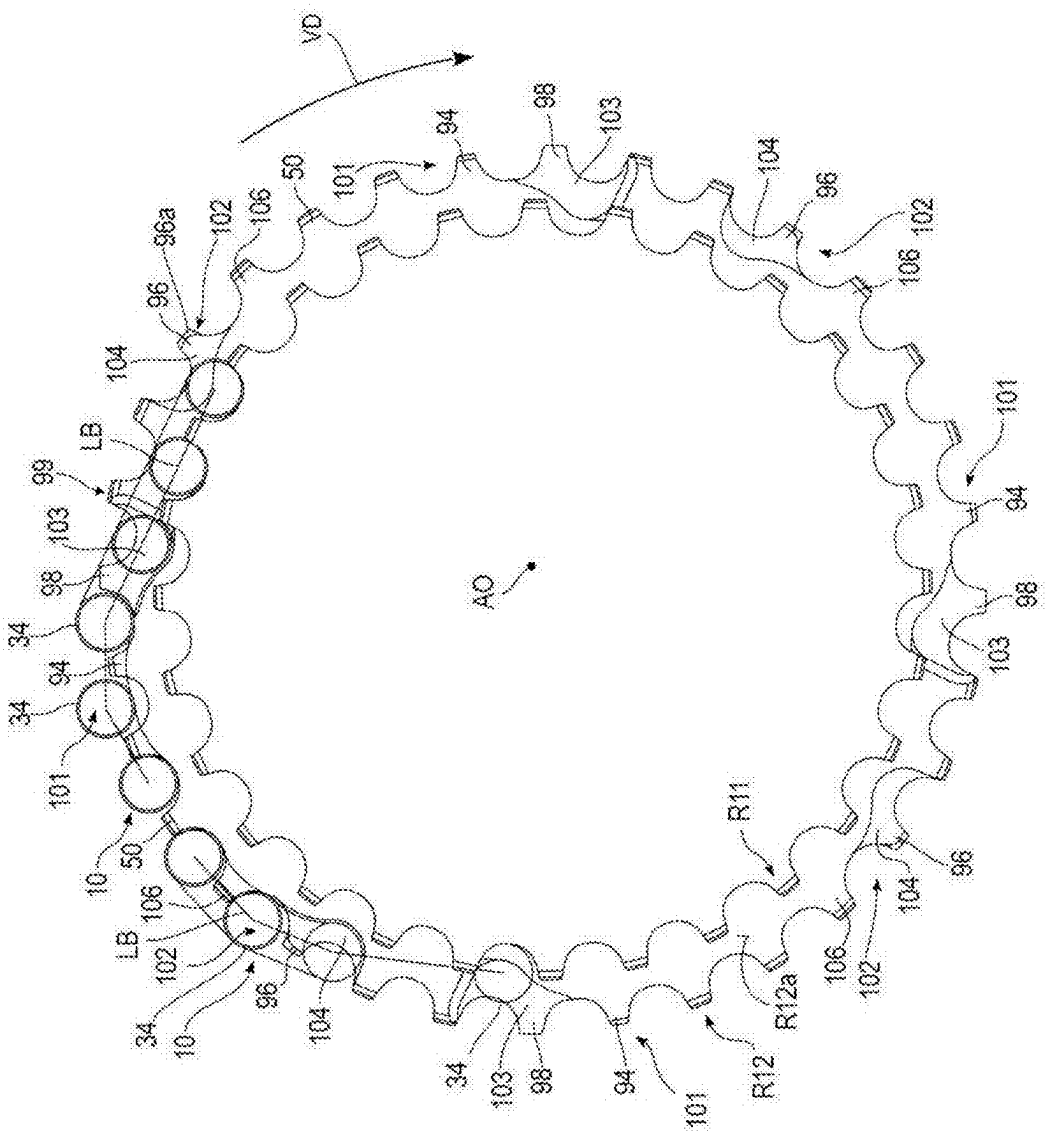
VD
AO
LB
LB
R11
R12
R12a
10
34
50
94
96
96a
98
99
101
102
103
104
106

Fig. 11

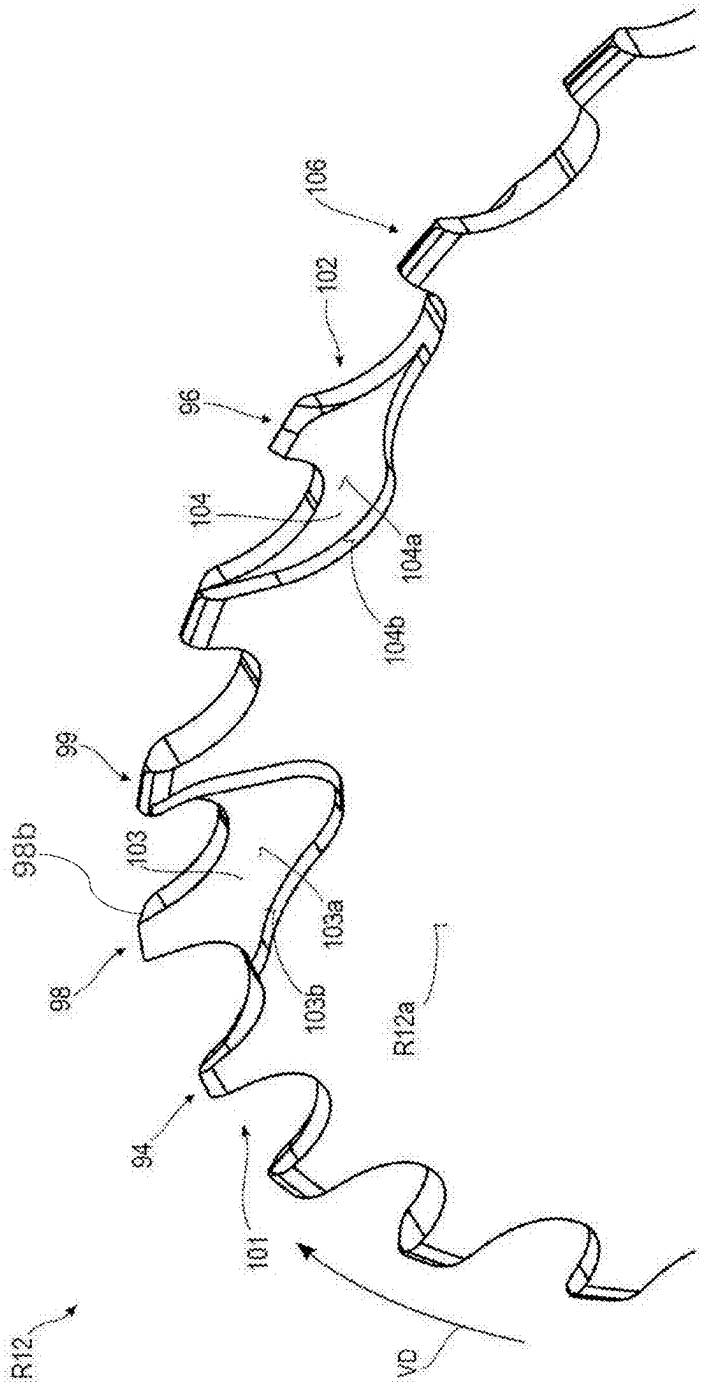
R12
VD
101
94
98
98b
99
103
103b
103a
R12a
104b
104
104a
96
102
106

Fig. 12

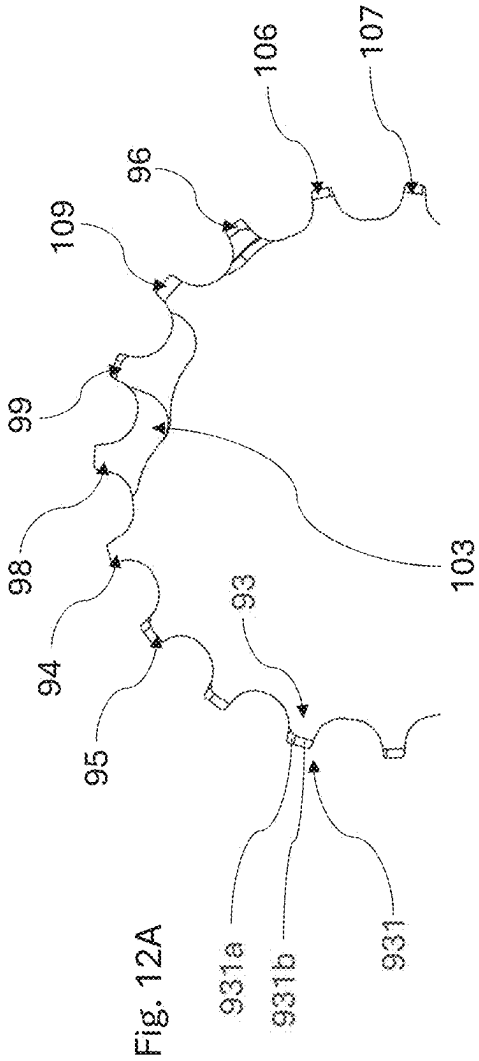

Fig. 12A

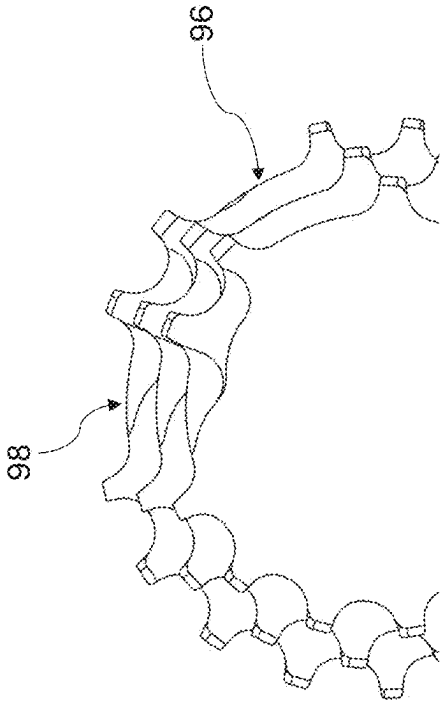

Fig. 12B

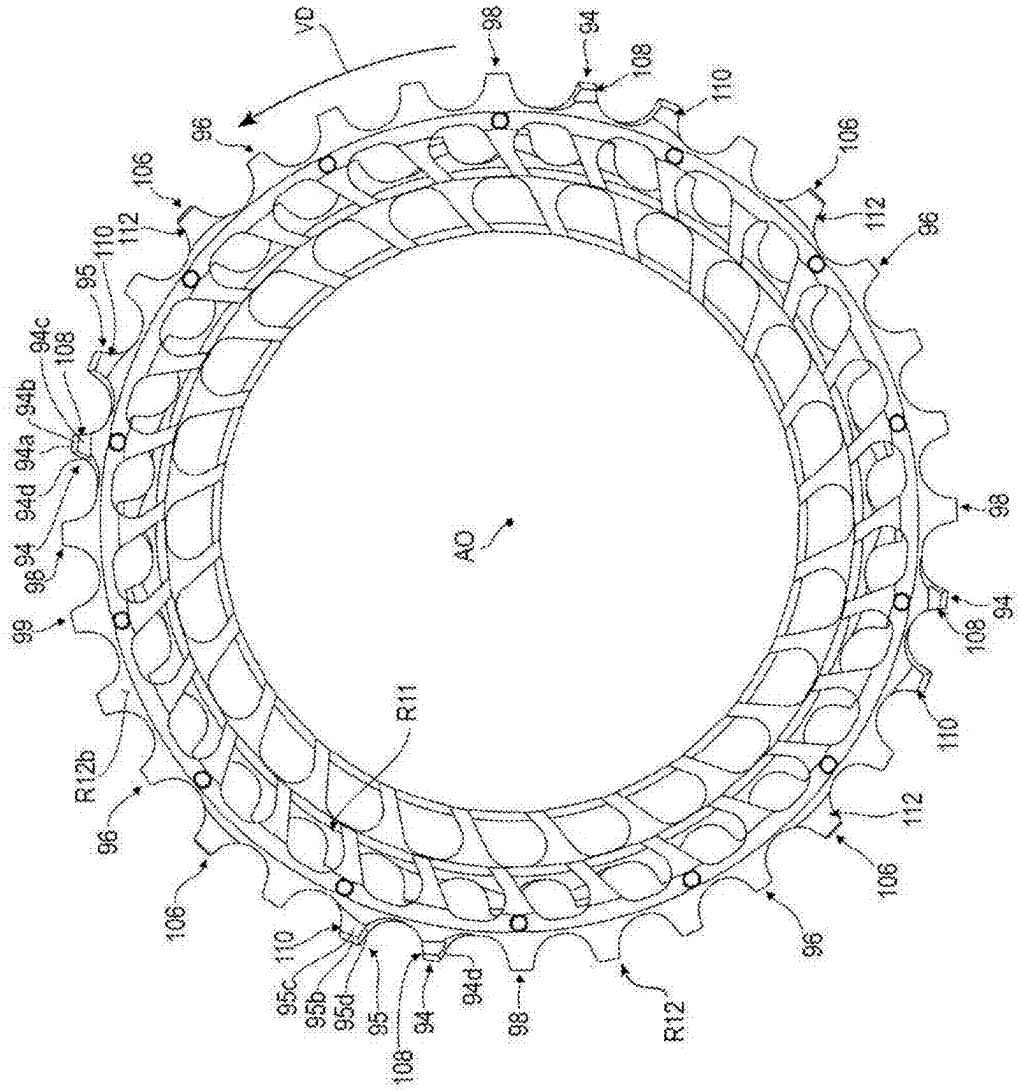
VD
98
94
108
110
96
106
112
95
94c
94b
94a
94d
99
R12b
R11
AO
95c
95b
95d
R12

Fig. 13

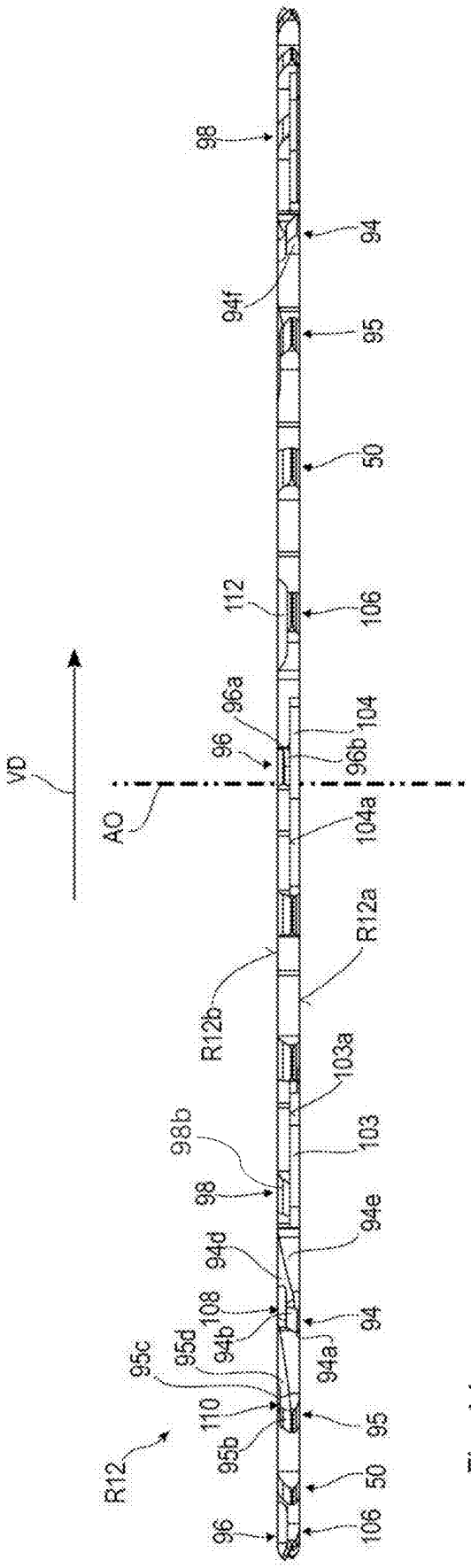

Fig. 14

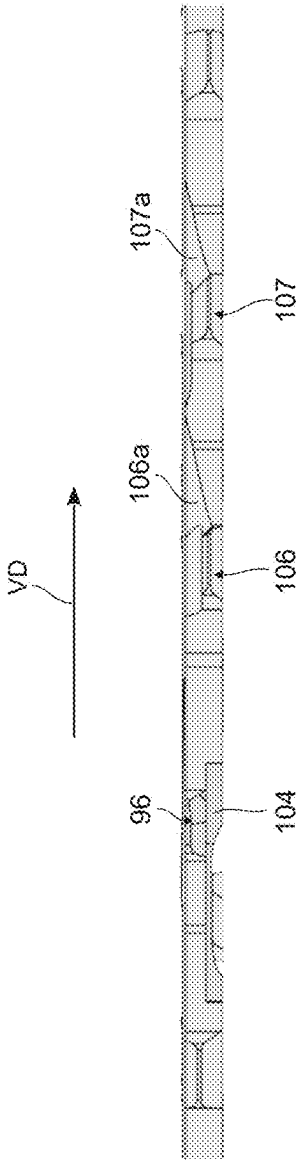

Fig. 14A

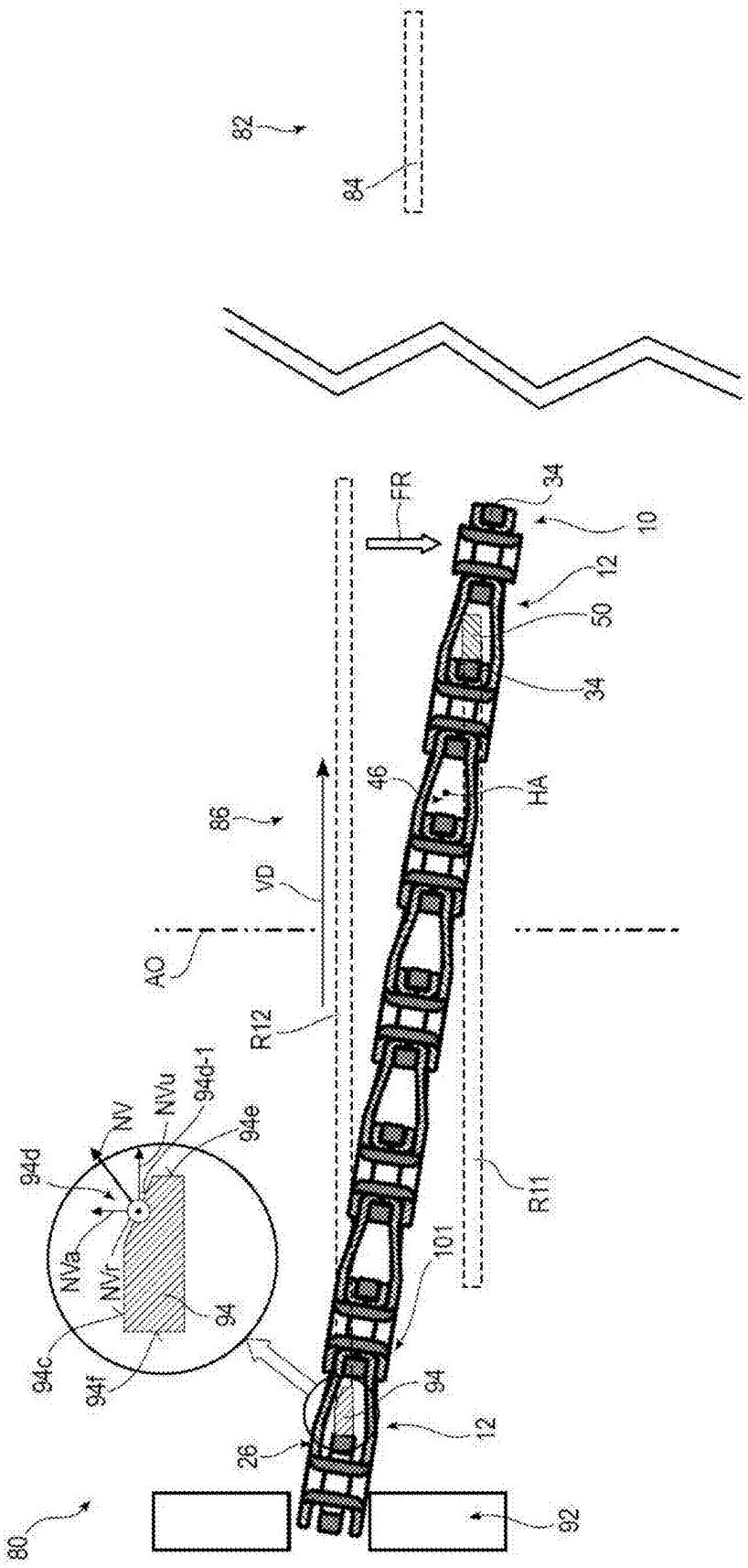
80
92
26
12
94
101
94c
94f
94
NVa
NVr
94d
NV
NVu
94d-1
94e
R12
AO
VD
86
R11
46
HA
50
12
34
10
FR
34
82
84

Fig. 15

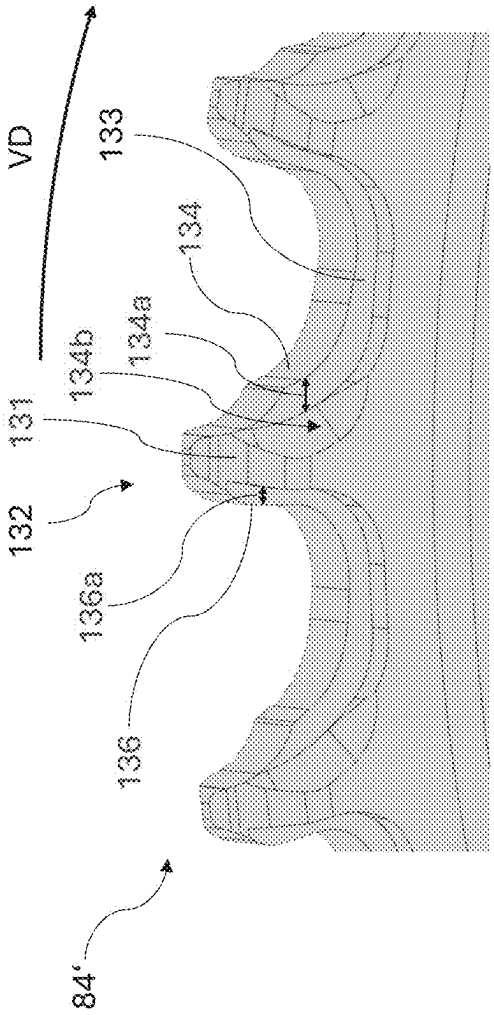

Fig. 16

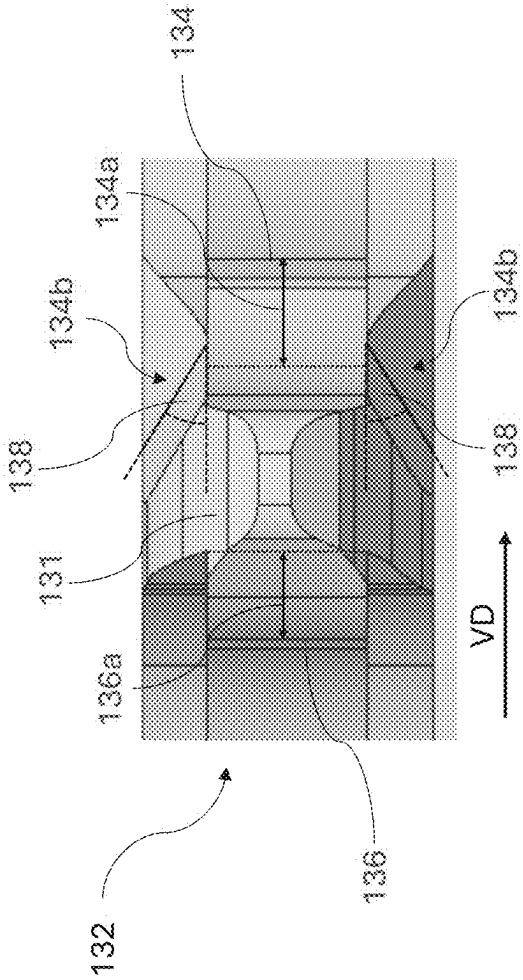

Fig. 16A

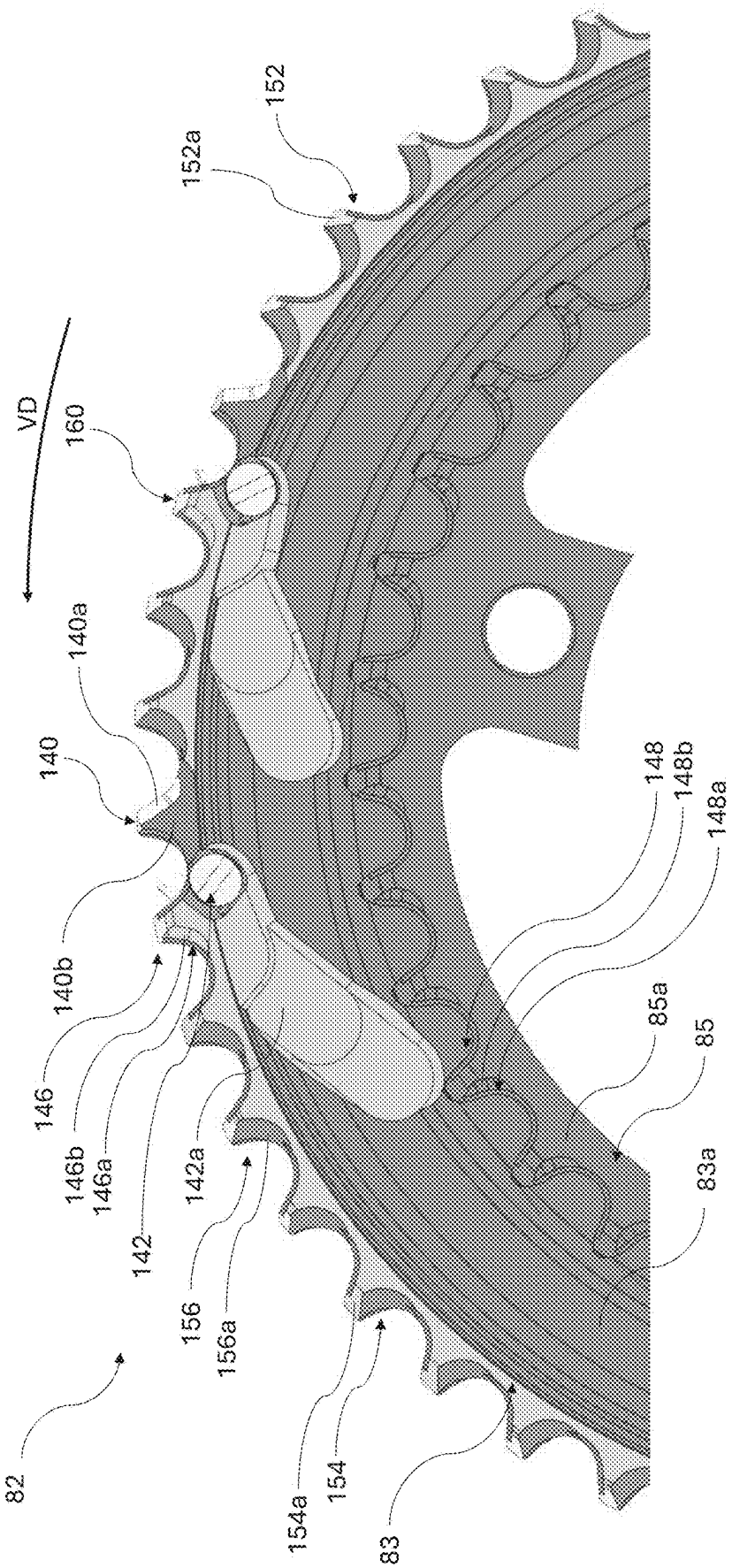
VD
160
152a
152
140a
140
140b
146
146b
146a
142
142a
156
156a
154a
154
82
83
148
148b
148a
85a
85
83a

Fig. 17

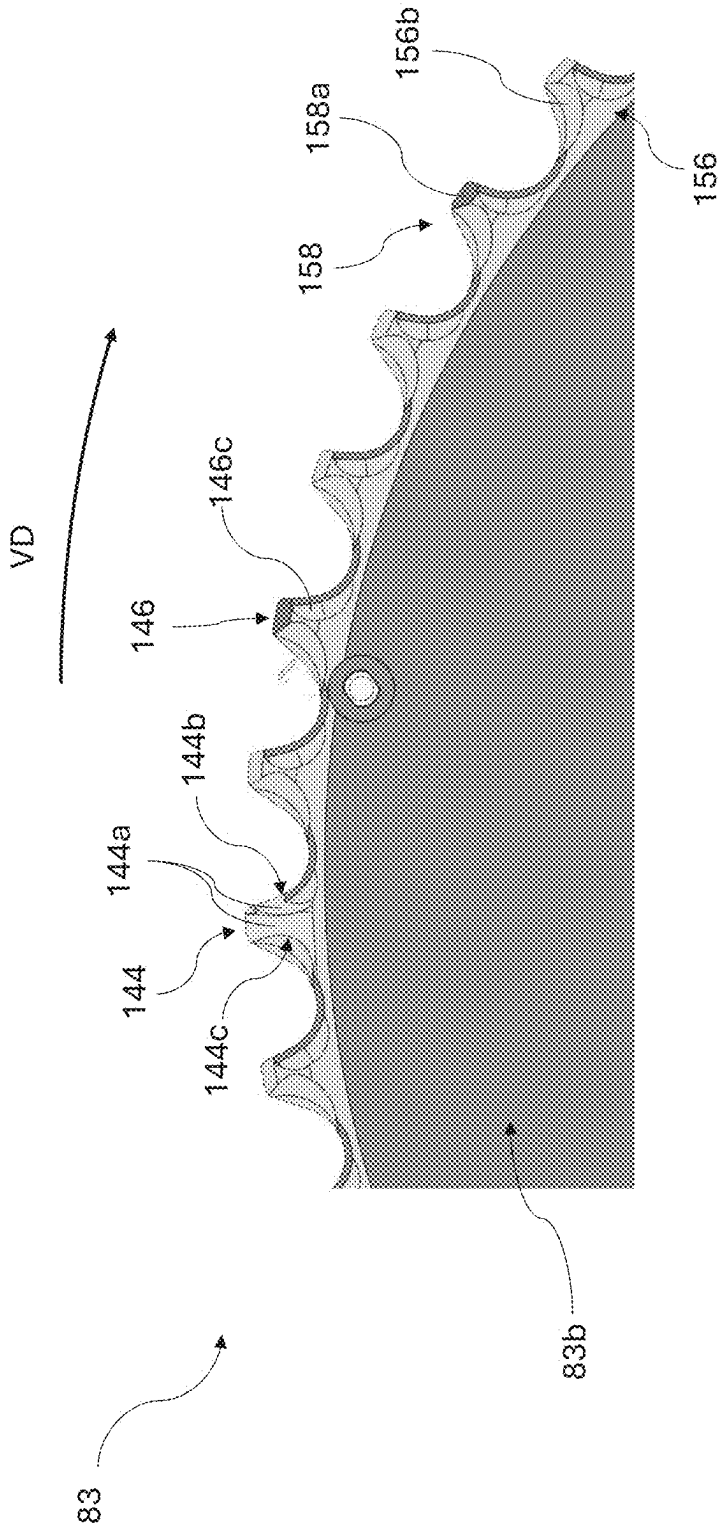

Fig. 17A

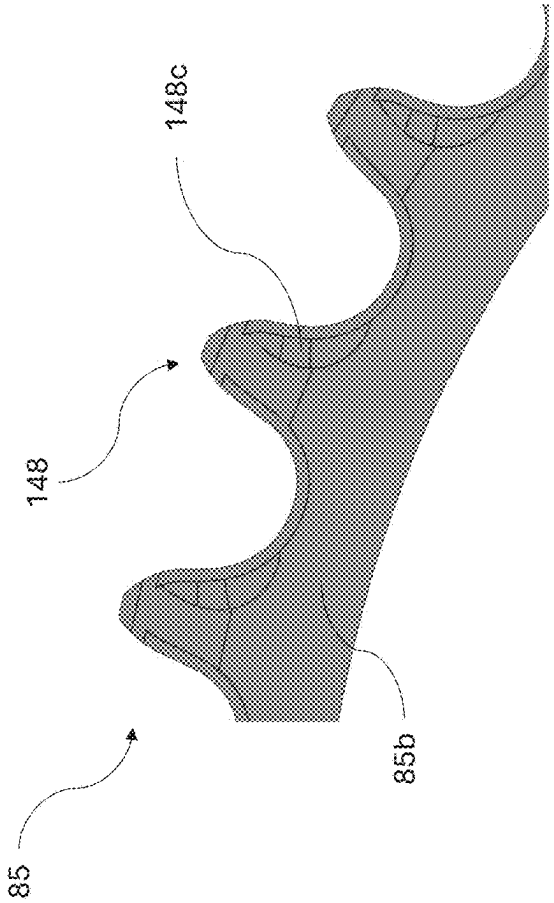

Fig. 17C

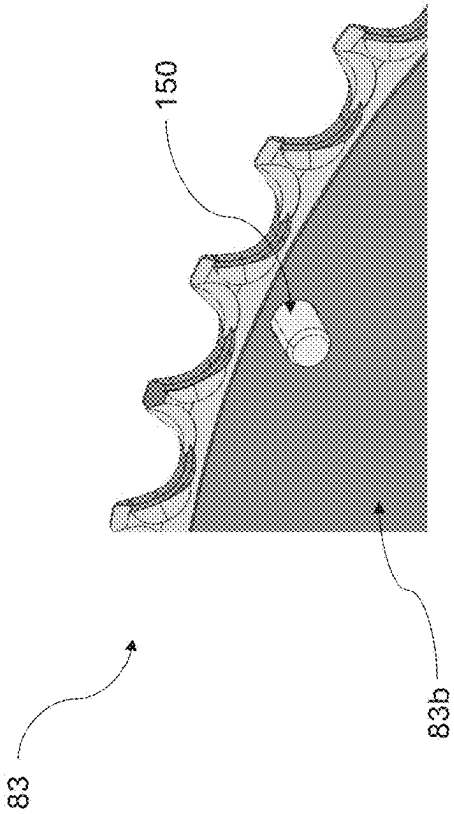

Fig. 17B

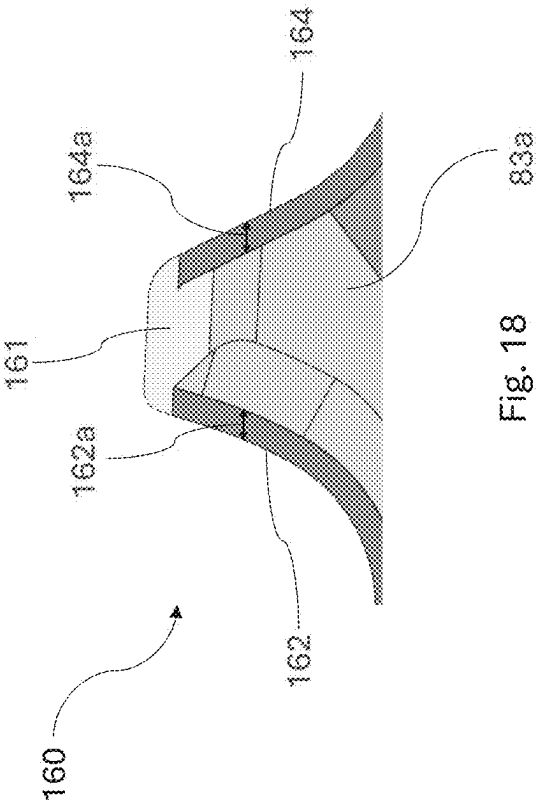

Fig. 18

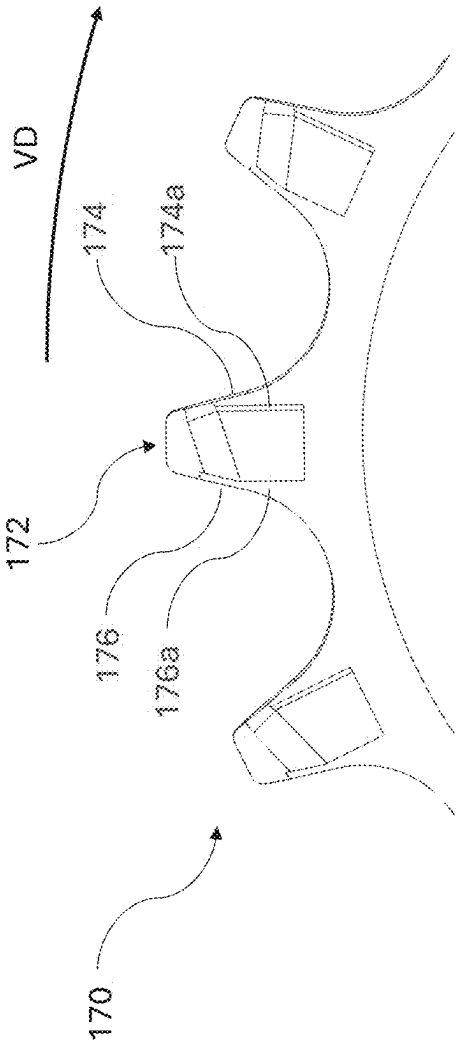

Fig. 19

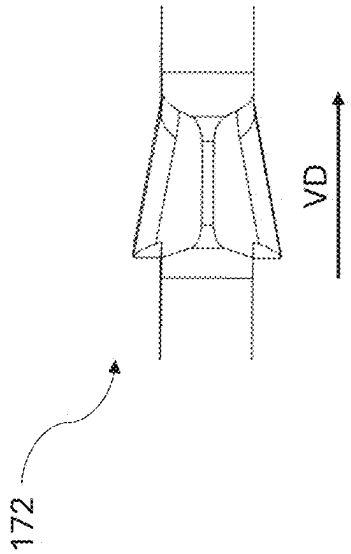

Fig. 19A

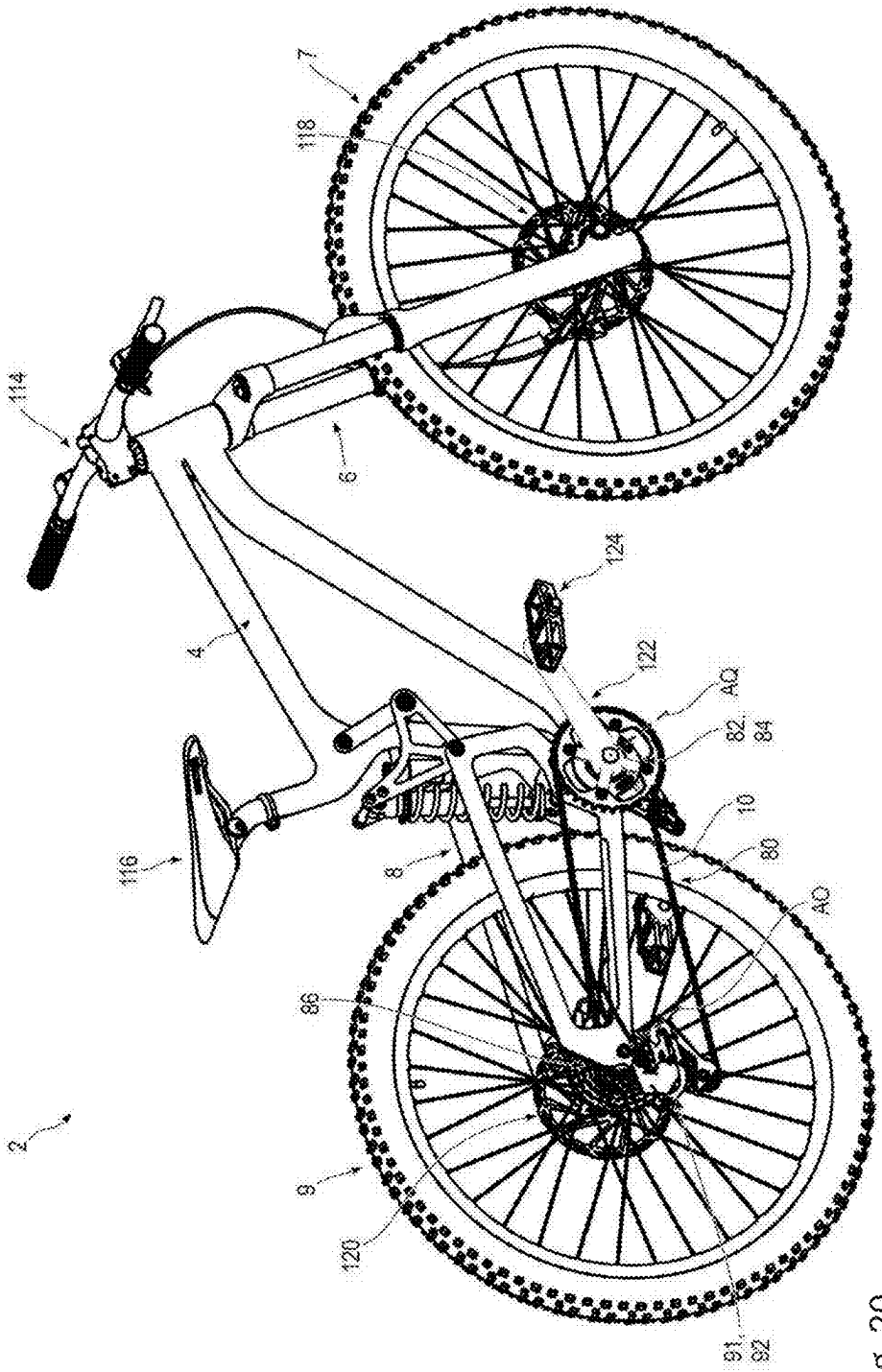

Fig. 20

SHIFTING BICYCLE CHAIN HAVING UNIFORM OFFSET CHAIN LINKS, AND CHAIN WHEEL ASSEMBLY COOPERATING THEREWITH

[0001] This application is a continuation-in-part of U.S. patent application Ser. No. 18/956,650, filed on Nov. 22, 2024, which claims the benefit of German Patent Application No. 10 2023 132 911.1, filed Nov. 24, 2023, and German Patent Application 10 2024 128 669.5, filed Oct. 2, 2024, which are hereby incorporated by reference in their entirety.

BACKGROUND

[0002] Bicycle chains having inner and outer plates that follow one another alternately along the longitudinal chain path are known. These conventional bicycle chains are characterized by their excellent shifting capability between coaxial chain wheels. This shifting capability arises substantially from the construction of conventional bicycle chains, in which outer plate chain links have a tooth engagement space with a larger clear inner chain link width and thus, when the bicycle chain is shifted to a target chain wheel, allow the initial engagement of a tooth of the target chain wheel particularly readily, while inner plate chain links have a tooth engagement space with a smaller clear inner chain link width and have, above all, a smaller outer chain link width, such that, when the bicycle chain is shifted to a target chain wheel, on account of the longitudinal spacing between two outer plates that follow one another along the longitudinal chain path, they allow axial approaching of the sprocket of the target chain wheel. Although no engagement of a tooth of the target chain wheel in the inner plate chain link occurs in the process, initial "catching" engagement of a tooth of the target chain wheel in the outer plate chain link that has axially approached the tooth in such a way is made much easier.

[0003] Such a bicycle chain, which is formed for the most part from identical chain links, is known for example in the form of a low-lubrication bicycle chain from U.S. Pat. No. 3,332,297 and from the related U.S. Pat. No. 3,344,677. Both documents disclose, as the smaller of two gear wheels around which the prior art chain circulates, one with seven teeth.

[0004] The chain plates of a chain link of the known bicycle chain are mutually parallel in the two longitudinal end regions. Between the wider and the narrower longitudinal end region, a narrowing portion is formed, in which the clear inner chain link width, to be measured along the transverse chain axis between the mutually facing inner sides of the chain plates or chain plate inner surfaces, is reduced from the larger clear chain link width in the wider longitudinal end region, along the longitudinal chain path, to the smaller clear chain link width in the narrower longitudinal end region. The narrowing portion of the chain plates, when the tooth engaging in chain links of the known chain is considered, is located approximately in the longitudinal middle of the tooth.

[0005] A roller chain which is structurally similar but is disclosed without any reference to use on a bicycle is known from U.S. Pat. No. 9,890,830 B2. On the chain known from U.S. Pat. No. 9,890,830 B2, too, the narrower longitudinal end region of a chain link extends, along the longitudinal chain path, deep into the tooth engagement space.

[0006] FIG. 27 of U.S. Pat. No. 10,435,112 B2 shows, singularly, a modified bicycle chain which substantially corresponds structurally to the above-described bicycle chains.

[0007] A further bicycle chain with offset chain links is known from US 2005/0266948 A1. These bicycle chains disclose that the spacing between two immediately successive roller axes, i.e. basically the chain pitch, forms the minimum increment of the chain length, while conventional bicycle chains with inner plates and outer plates that follow one another alternately can be shortened or lengthened only by twice the spacing, i.e. by twice the chain pitch, as minimum increment value.

[0008] Finally, a bicycle chain having identical offset chain links is known from US 2011/0098146 A1, which discloses that the chain plates of a chain link are formed as portions of an integrally cohesive bending component.

[0009] US 2023/0023623A1 discloses a chain for a bicycle, a sprocket cassette, a chainring, a crankset, a chain drive system and a bicycle. The chain comprises a plurality of interleaved link elements, each link element being pivotally attached to at least one other link element and having at least two teeth. A flank of each tooth is adapted to engage with a flank of a sprocket tooth. The sprocket cassette comprises one or more sprockets, each comprising a plurality of sprocket teeth, wherein each sprocket tooth has a flank with a profile corresponding to a profile of at least a portion of a tooth of each of the plurality of link elements. The chainring comprises a plurality of sprocket drive teeth having a profile corresponding to the profile of at least one of the teeth of each of the plurality of link elements.

[0010] DE 10 2018 106 600 A1 discloses a bicycle drivetrain comprising a sprocket assembly and a floating sprocket. The sprocket assembly comprises a first central pivot axis, a first sprocket and a second sprocket. The first sprocket comprises at least one first sprocket tooth and at least one first tooth axially displaceable with respect to the first central pivot axis. The second sprocket comprises at least one second sprocket tooth. The at least one first axially displaceable tooth can be displaced in relation to the at least one first sprocket tooth in the direction of the at least one second sprocket tooth. The floating sprocket has a second central pivot axis and an axially sliding surface. The axially sliding surface serves to support the floating sprocket movably with respect to the sprocket assembly in an axial direction with respect to the second central pivot axis.

[0011] CN 210218555U discloses a monocular chain. Here, the ring body is formed by connecting a plurality of chain links in series. The front end of one chain link of the adjacent chain links is freely rotatably connected to the rear end of the other chain link. The number of chain links in the monocular chain corresponds to the number of individual links. It also avoids the phenomenon that the number of links in a chain with twice the number of links must be even.

SUMMARY

[0012] What is disclosed is a bicycle chain, also referred to as "chain" for short below, having a plurality of chain links that follow one another along a virtual longitudinal chain path. The plurality of chain links that immediately follow one another along the longitudinal chain path are pivotable relative to one another about mutually parallel virtual pivot axes. The pivot axes extend along a virtual transverse chain axis oriented transversely to the longitudi-

nal chain path. The two pivot axes of a chain link that are spaced apart from one another along the longitudinal chain path define a virtual reference plane, containing the pivot axes, for the chain link. Each chain link has two chain plates that are formed separately from one another and are located opposite one another along the transverse chain axis The chain plates have their greatest dimensions along the longitudinal chain path and along a vertical chain axis that extends both transversely to the longitudinal chain path and transversely to the transverse chain axis. The chain plates are formed and arranged in an offset manner along the longitudinal chain path such that each chain link has a wider longitudinal end, along the transverse chain axis, with a larger link width and a narrower longitudinal end, opposite the wider longitudinal end along the longitudinal chain path, with a smaller link width. A chain roller is accommodated between the chain plates in a narrower longitudinal end region located closer to the narrower longitudinal end than to the wider longitudinal end, wherein, for chain links that follow one another along the longitudinal chain path, it is the case that in each case a narrower longitudinal end region of the chain link projects into a wider longitudinal end region, located closer to the wider longitudinal end than to the narrower longitudinal end, of the chain link that is immediately adjacent along the longitudinal chain path, such that the bicycle chain has chain rollers following one another along the longitudinal chain path that are arranged between chain plates of one and the same chain link once in the narrower longitudinal end region thereof and once more in the wider longitudinal end region thereof such that the chain plates of a chain link, together with the two chain rollers arranged between them, enclose a tooth engagement space for the engagement of a tooth of a chain wheel. The chain wheel may be a front chainring and/or a rear sprocket. The bicycle chain is configured for shifting between two coaxial rear sprockets that are adjacent along the transverse chain axis and/or between the two coaxial front chainrings that are adjacent along the transverse chain axis.

[0013] A bicycle drive assembly comprising, as chain wheel assemblies, a front chainring assembly and a rear sprocket assembly arranged at a distance therefrom. The front chainring and rear sprocket assembly are each rotatable about mutual parallel assembly axes. The bicycle drive assembly also includes a bicycle chain that runs in a closed manner about the assembly axes and, is in form-fitting engagement with each of these chain wheel assemblies. The bicycle chain has a plurality of chain links that follow one another along a virtual longitudinal chain path. The plurality of chain links that immediately follow one another along the longitudinal chain path are pivotable relative to one another about mutually parallel virtual pivot axes. The pivot axes extend along a virtual transverse chain axis oriented transversely to the longitudinal chain path. The two pivot axes of a chain link that are spaced apart from one another along the longitudinal chain path define a virtual reference plane, containing the pivot axes, for the chain link. Each chain link has two chain plates that are formed separately from one another and are located opposite one another along the transverse chain axis The chain plates have their greatest dimensions along the longitudinal chain path and along a vertical chain axis that extends both transversely to the longitudinal chain path and transversely to the transverse chain axis. The chain plates are formed and arranged in an offset manner along the longitudinal chain path such that each chain link has a wider longitudinal end, along the transverse chain axis, with a larger link width and a narrower longitudinal end, opposite the wider longitudinal end along the longitudinal chain path, with a smaller link width. A chain roller is accommodated between the chain plates in a narrower longitudinal end region located closer to the narrower longitudinal end than to the wider longitudinal end, wherein, for chain links that follow one another along the longitudinal chain path, it is the case that in each case a narrower longitudinal end region of the chain link projects into a wider longitudinal end region, located closer to the wider longitudinal end than to the narrower longitudinal end, of the chain link that is immediately adjacent along the longitudinal chain path, such that the bicycle chain has chain rollers following one another along the longitudinal chain path that are arranged between chain plates of one and the same chain link once in the narrower longitudinal end region thereof and once more in the wider longitudinal end region thereof such that the chain plates of a chain link, together with the two chain rollers arranged between them, enclose a tooth engagement space for the engagement of a tooth of a chain wheel. The chain wheel may be a front chainring and/or a rear sprocket. The bicycle chain is configured for shifting between two coaxial rear sprockets that are adjacent along the transverse chain axis and/or between the two coaxial front chainrings that are adjacent along the transverse chain axis. At least one of the chain wheel assemblies has, as a shifting chain wheel assembly, at least two coaxial chain wheels with different number of chain wheel teeth. The drive assembly has a derailleur which is displaceable at least also along the parallel assembly axes, has the bicycle chain passing through it, and is designed, by being displaced along the assembly axes of the shifting chain wheel assembly, to shift the bicycle chain from one of the at least two coaxial chain wheels, with which the bicycle chain is engaged, onto at least another of the at least two coaxial chain wheels, in order to bring the other chain wheel into engagement with the bicycle chain.

BRIEF DESCRIPTION OF THE DRAWINGS

[0014] FIG. **1** is a perspective, schematic view of one embodiment of a bicycle chain on the side with the rectilinear edge of the chain plates,

[0015] FIG. **2** is a side view of the bicycle chain in FIG. **1**, as viewed along the transverse chain axis along the arrow II in FIG. **3**,

[0016] FIG. **3** is a plan view of the bicycle chain in FIGS. **1** and **2**, as viewed along the vertical chain axis along the arrow III in FIG. **2**,

[0017] FIG. **4** is a view in longitudinal section of the bicycle chain with the reference plane as a section plane, as viewed along the arrows IV in FIG. **2**,

[0018] FIG. **5** is a side view of the chain plate outer surface of a chain plate **24** of the bicycle chain in FIGS. **1** to **3**, as viewed along the transverse chain axis along the arrow II in FIG. **3** and along the arrow V in FIG. **6**, respectively,

[0019] FIG. **5**A is a side view of an outer surface of the link plate similar to the view in FIG. **5**, but with an additional chamfer **64***a* in the region of the flattened height region **49** on the planar annular surface **64**,

[0020] FIG. **6** is a plan view of the longitudinal edge, located away from the engagement side, of the chain plate

24 in FIG. **5**, as viewed along the vertical chain axis along the arrow III in FIG. **2** and along the arrow VI in FIGS. **5** and **7**, respectively,

[0021] FIG. **6**A is a plan view, corresponding to FIG. **6**, of the longitudinal edge, located away from the engagement side, of a chain plate **26** of a second embodiment indicated in FIG. **6**,

[0022] FIG. **7** is a side view of the chain plate inner surface of the chain plate **24** in FIGS. **5** and **6**, as viewed along the transverse chain axis along the arrow VII in FIG. **6**,

[0023] FIG. **7**A is a side view of the inner surface of the chain link plate **24** similar to the view in FIG. **7**, but with an additional chamfer **62***a* in the region of the flattened height region **49***a* on the planar annular surface **62**,

[0024] FIG. **7**B is a perspective view of the chain plate outer surface of a fourth embodiment of a chain plate **26**,

[0025] FIG. **7**C is a perspective view of the outer surface of the link plate of FIG. **7**B, with a chamfer **1060***a* extended along the outer contour of the wider longitudinal end **1028**,

[0026] FIG. **7**D is a side view of the chain plate outer surface of the chain plate **1026** in FIG. **7**B, as viewed along the transverse chain axis,

[0027] FIG. **7**E is a perspective view of the chain plate inner surface of a fifth embodiment of a chain plate **2026**,

[0028] FIG. **7**F is a perspective view with a view in cross section of a further embodiment, according to the disclosure, of a bicycle chain having a sixth embodiment of chain plates,

[0029] FIG. **8**A, on the left side, is a schematic representation of a plan view of a first embodiment of two successive chain links of a chain **10** and, on the right side, is a section of the respective chain in a sectional view, wherein the sectional plane is spanned by the longitudinal chain path LB and the respective transverse chain axis BA,

[0030] FIG. **8**B, on the left side, is a schematic representation of a plan view of a second embodiment of two successive chain links of a chain **10** and, on the right side, is a section of the respective chain in a sectional view, wherein the sectional plane is spanned by the longitudinal chain path LB and the respective transverse chain axis BA,

[0031] FIG. **8**C, on the left side, is a schematic representation of a plan view of a third embodiment of two successive chain links of a chain **10** and, on the right side, is a section of the respective chain in a sectional view, wherein the sectional plane is spanned by the longitudinal chain path LB and the respective transverse chain axis BA,

[0032] FIG. **8**D, on the left side, is a schematic representation of a plan view of a fourth embodiment of two successive chain links of a chain **10** and, on the right side, is a section of the respective chain in a sectional view, wherein the sectional plane is spanned by the longitudinal chain path LB and the respective transverse chain axis BA,

[0033] FIG. **8**E, on the left side, is a schematic representation of a plan view of a fifth embodiment of two successive chain links of a chain **10** and, on the right side, is a section of the respective chain in a sectional view, wherein the sectional plane is spanned by the longitudinal chain path LB and the respective transverse chain axis BA,

[0034] FIG. **8**F, on the left side, is a schematic representation of a plan view of a sixth embodiment of two successive chain links of a chain **10** and, on the right side, is a section of the respective chain in a sectional view, wherein the sectional plane is spanned by the longitudinal chain path LB and the respective transverse chain axis BA,

[0035] FIG. **8**G, on the left side, is a schematic representation of a plan view of a seventh embodiment of two successive chain links of a chain **10** and, on the right side, is a section of the respective chain in a sectional view, wherein the sectional plane is spanned by the longitudinal chain path LB and the respective transverse chain axis BA,

[0036] FIG. **8**H, on the left side, is a schematic representation of a plan view of a eighth embodiment of two successive chain links of a chain **10** and, on the right side, is a section of the respective chain in a sectional view, wherein the sectional plane is spanned by the longitudinal chain path LB and the respective transverse chain axis BA,

[0037] FIG. **8**I, on the left side, is a schematic representation of a plan view of a ninth embodiment of two successive chain links of a chain **10** and, on the right side, is a section of the respective chain in a sectional view, wherein the sectional plane is spanned by the longitudinal chain path LB and the respective transverse chain axis BA

[0038] FIG. **9** is an axial front view of a sprocket assembly for a rear wheel of a bicycle, driven by the bicycle chain in FIGS. **1** to **7**, as per FIG. **15** with a direction of view extending along the assembly axis of the sprocket assembly, along the arrow VIII in FIG. **10**,

[0039] FIG. **9**A is a section of the axial front view of the sprocket assembly for a rear wheel of FIG. **9** to illustrate second shifting lanes of the four smallest sprockets,

[0040] FIG. **9**B is a section of the axial front view of the sprocket assembly for a rear wheel of FIG. **9** to illustrate the first shifting lanes of the eight smallest sprockets,

[0041] FIG. **10** is a side view of the sprocket assembly in FIG. **9** with a direction of view orthogonal to the assembly axis, along the arrow IX in FIG. **9**,

[0042] FIG. **11** is an axial front view of only the second largest and the largest sprockets of the sprocket assembly in FIGS. **9** and **10** with a direction of view extending along the assembly axis of the sprocket assembly, along the arrow VIII in FIG. **10**, wherein the course of the bicycle chain is schematically shown both when shifting from the larger to the smaller sprocket and from the smaller to the larger sprocket,

[0043] FIG. **12** is a perspective detail view of a circumferential portion of the larger of the two sprockets in FIG. **11** with two different shifting lines, wherein the side, facing the smaller sprocket in FIG. **11**, of the larger of the two sprockets in FIG. **11** is viewed,

[0044] FIG. **12**A is a detailed view of a circumferential section of a sprocket of the sprocket assembly of FIG. **9** with two different shifting lanes, whereby the side of the sprocket facing a smaller sprocket in FIG. **9** is viewed,

[0045] FIG. **12**B is a detailed view of a circumferential section of the sprocket assembly in FIG. **9** with two different shifting lanes,

[0046] FIG. **13** is an axial rear view of the two sprockets in FIG. **11** with a direction of view along the assembly axis of the sprocket assembly, along the arrow XII in FIG. **10**,

[0047] FIG. **14** is a schematic view of the circumference of the largest sprocket with a direction of view orthogonal to the assembly axis of the sprocket assembly, along the arrow XIII in FIG. **9**.

[0048] FIG. **14**A is a schematic view of a circumferential section of a sprocket in a direction orthogonal to the axis of the sprocket assembly along the arrow XIII in FIG. **9**,

[0049] FIG. **15** is a schematic illustration of a first shifting operation of the bicycle chain in FIGS. **1** to **4** on a bicycle sprocket assembly of a bicycle rear wheel,

[0050] FIG. **16** is a detailed perspective view of a circumferential section of a chainring **84**,

[0051] FIG. **16**A is a top view of a tooth **132** of the chainring **84** of FIG. **16**,

[0052] FIG. **17** is a schematic view of a circumferential section of a chainring assembly **82**,

[0053] FIG. **17**A is a schematic rear view of a section of the circumferential section of the chainring assembly **82** of FIG. **17**,

[0054] FIG. **17**B is a schematic rear view of a further circumferential section of the chainring assembly **82**,

[0055] FIG. **17**C is a schematic rear view of a circumferential section of the smaller chainring assembly **82**,

[0056] FIG. **18** is a schematic view of a tooth of the larger chainring **83** of the chainring assembly **82**,

[0057] FIG. **19** is a schematic view of a circumferential section of a deflection pulley **170**,

[0058] FIG. **19**A is a schematic view of a tooth **172** of the deflection pulley **170** of FIG. **19**,

[0059] FIG. **20** is a schematic perspective illustration of a bicycle having a drive assembly according to the disclosure.

[0060] The figures are not true to scale. For greater clarity, not all assemblies and components of identical design are each provided with reference signs in FIGS. **1** to **20**.

DESCRIPTION

[0061] Since, on bicycle chains of the type mentioned at the beginning, the chain links of which, possibly apart from a chain link that serves as a chain lock, have a substantially identical construction, the tooth engagement space of chain links that follow one another along the longitudinal chain path likewise has an identical construction, the features, known from conventional bicycle chains, that facilitate shifting, such as providing outer plate and inner plate chain links that follow one another alternately along the longitudinal chain path, are not present and not usable on bicycle chains of the type mentioned at the beginning.

[0062] The present disclosure addresses the problem of improving the bicycle chain mentioned at the beginning and to make it usable in a functional scope comparable with conventional bicycle chains.

[0063] Fundamentally, the present disclosure solves this problem on a bicycle chain of the type mentioned at the beginning in that the bicycle chain is designed for shifting between two coaxial rear sprockets adjacent along the chain width axis and/or between two coaxial front chainrings adjacent along the chain width axis.

[0064] This configuration is explained in the following text using different aspects of the bicycle chain discussed herein.

[0065] In principle, it is sufficient for the three coordinates that are used to describe the bicycle chain: longitudinal chain path, transverse chain axis and vertical chain axis, to extend transversely to one another in pairs in each case. As a rule, the abovementioned coordinates define a Cartesian coordinate system, in which the longitudinal chain path, the transverse chain axis and the vertical chain axis ore oriented orthogonally to one another locally in pairs.

[0066] The bicycle chain may, although it is unusable for driving operation, but is readily identifiable as a bicycle chain, be in the form of an open bicycle chain or as an operational bicycle chain that circulates in a closed manner. In the case of the bicycle chain that circulates in a closed manner, the bicycle chain is generally curved around an axis of curvature parallel to the transverse chain axis. As a result, the transverse chain axis exhibits the same spatial direction for all chain links, but the longitudinal chain path has or may have a different spatial orientation depending on its location along the bicycle chain on account of the locally different chain curvature. The longitudinal chain path always extends transversely (or orthogonally) to the transverse chain axis, however. Since the vertical chain axis is oriented transversely (or orthogonally) both to the transverse chain axis and to the longitudinal chain path, the absolute orientation of the vertical chain axis in space is also dependent on the location of viewing of the bicycle chain along the longitudinal chain path.

[0067] In the case of a bicycle chain engaged with a chain wheel, the vertical chain axis extends, in the engagement region with the chain wheel, generally in the radial direction with respect to the axis of rotation of the engaging chain wheel, and the longitudinal chain path extends, in the engagement region with the chain wheel, circumferentially about the axis of rotation thereof, or tangentially thereto.

[0068] In the present application, the term "chain wheel" is used as an umbrella term for a gear wheel designed for meshing engagement with the bicycle chain. In a bicycle drive assembly, at least one front chainring coupled directly to cranks, and at least one rear sprocket connected to the coaxially arranged rear wheel for torque transmission are usually present as chain wheels.

[0069] Unless stated otherwise, the indications "axial", "radial", "along a circumferential path about" in the present application relate to an assembly axis of a chain wheel assembly engaged with the chain.

[0070] To provide or improve the shifting capability of the bicycle chain discussed herein by shifting between two coaxial chain wheels, the bicycle chain may be configured such that, for a plurality of the chain links, or in another embodiment all the chain links, it is the case that each chain plate of a chain link has a first offset region located closer to the wider longitudinal end and a second offset region located closer to the narrower longitudinal end. Similarly to the prior art, these offset regions have the effect that the narrower longitudinal end region transitions, along the longitudinal chain path, into the wider longitudinal end region, and vice versa.

[0071] In this case, the clear inner chain link width to be measured between the chain plates along the transverse chain axis decreases on progressing along the longitudinal chain path from the first to the second offset region. In an embodiment, a clear inner chain link width changes, on progressing along the longitudinal chain path, only between a first and a second offset region, while a mutually facing inner surfaces of the two longitudinal end regions: narrower longitudinal end region and wider longitudinal end region, are formed parallel to one another. The length region between the first and the second offset region thus forms a narrowing portion of the chain link.

[0072] If, however, the clear inner chain link width also changes in the region of the narrower longitudinal end region and/or of the wider longitudinal end region on progressing along the longitudinal chain path, the change, in relation to a length unit along the longitudinal chain path, in the clear inner chain link width is greater in the length region

between the first and the second offset region than in the narrower and/or in the wider longitudinal end region. The change, in relation to a length unit along the longitudinal chain path, in the clear inner chain link width can be understood as being a length gradient of the clear inner chain link width.

[0073] In principle, it is the case that the clear inner chain link width changes to a greater extent along the longitudinal chain path between the first and the second offset region than in the longitudinal region between the wider longitudinal end and the first offset region and/or between the narrower longitudinal end and the second offset region.

[0074] Since, in the present case, it is a matter of the length gradient of the clear inner chain link width, formations, not associated with the chain link width, on the inner side of chain plates, for example a collar formed on an inner side of a chain plate as a receptacle for a chain roller, are not taken into consideration when determining the clear inner chain link width. In another embodiment a collar is formed integrally on an inner side of a chain plate as a receptacle for a chain roller.

[0075] The statements given above in relation to the change in the clear inner chain link width of the plurality of chain links, or in another embodiment of all the chain links, on progressing along the longitudinal chain path apply, in the case of doubt, along the reference plane, also on both sides of the reference plane, or also over the entire chain link height to be measured along the vertical chain axis.

[0076] In order to give the bicycle chain leeway for a shifting operation at a chain wheel tooth engaging in said bicycle chain, or in a tooth engagement space, the spacing, at least in the chain plate inner surface, of the first and the second offset region of a chain plate from one another should differ from the radius of the chain rollers, at least in the virtual reference plane, by no more than 15% relative to the radius of the chain rollers. In another embodiment, a spacing, at least in a chain plate inner surface, of a first and a second offset region of a chain plate from one another differs from a radius of the chain rollers, at least in the virtual reference plane, by no more than 10% relative to the radius of the chain rollers. In yet another embodiment, a spacing, at least in a chain plate inner surface, of a first and a second offset region of a chain plate from one another differs from a radius of the chain rollers, at least in the virtual reference plane by no more than 7%, relative to the radius of the chain rollers. This generally ensures that a chain wheel tooth engaging in the tooth engagement space bears against a chain roller of the chain only with its load-bearing flank, while its opposite flank, facing away from the load-bearing flank, is arranged at a spacing from the chain roller located closest to it and is located opposite the latter. The above-mentioned dimensional relationship applies for both chain plates of a chain link. The dimensional relationship likewise applies for a plurality, or all, of the chain links.

[0077] In another embodiment, chain plates have only a first and a second offset region and no further offset regions. Likewise, the clear inner chain link width and/or the external width dimension, to be measured along the transverse chain axis over the outer surfaces of the chain plates, of a chain link does not increase along the longitudinal chain path from the wider longitudinal end to the first offset region and/or from the second offset region to the narrower longitudinal end in at least one vertical portion along the vertical chain axis. Rather, the clear inner chain link width and/or the external width dimension of a chain link is either constant or decreases in said longitudinal portions along the longitudinal chain path in at least the vertical portion, over the entire chain height. This is the case in particular for the clear inner chain link width, without the abovementioned formations being taken into account. This is the case, as already stated above, for a plurality of the chain links, or for all the chain links.

[0078] The offset directions of the first and second offset region are, in an embodiment, opposite to one another to achieve the desired shape of a chain plate, i.e. when viewing an outer side of a chain plate along the transverse chain axis, a convex offset is formed in the first offset region and a concave offset is formed in the second offset region.

[0079] In contrast to conventional bicycle chains with outer plate chain links and inner plate chain links that follow one another alternately along the longitudinal chain path, the plurality of chain links, or all the chain links, of the above-discussed bicycle chain may have a substantially identical construction, and so it is not possible, in principle, to provide large and small tooth engagement spaces, of which the large tooth engagement spaces of the outer plate chain links make it easier for the target chain wheel to catch the chain and of which the inner plate chain links, with their small tooth engagement spaces, do allow secure meshing engagement with a chain wheel but otherwise, during a shifting operation, allow axial approaching of the target chain wheel in order to prepare for the catching of the chain at an outer plate chain link.

[0080] In order to create, for the above-discussed bicycle chain relative to a chain wheel tooth, axial leeway, in relation to the axis of rotation of the chain wheel bearing the chain wheel tooth, within the tooth engagement space, this being, as a rule, relative movement of a chain link relative to the chain wheel tooth along the transverse chain axis, according to an embodiment of the present disclosure, the tooth engagement space enclosed by the chain plates of a chain link along the transverse chain axis and by the two chain rollers, arranged between the chain plates of the chain link, along the longitudinal chain path, has a trapezoidal cross section in the reference plane as section plane. Of this trapezoidal cross section, the lateral surfaces of the chain rollers form the parallel trapezium sides and the chain plate inner surfaces that face one another along the transverse chain axis form the trapezium sides that are inclined towards one another. On the wider one of the two parallel trapezium sides, a longitudinal end of a chain plate is located on each respective side of the chain roller. The longitudinal ends of the chain plates are located, as described in more detail below, so close to the lateral surface of the chain roller along the longitudinal chain path that they lengthen, so to speak, the portion, formed by the chain roller lateral surface, of the wider one of the two parallel trapezium sides to the closest chain plate inner surfaces along the transverse chain axis. On the narrower one of the two parallel trapezium sides, at least in the reference plane, or also in further viewing planes that are parallel to the reference plane and spaced apart from the reference plane, on the mutually facing inner sides of the chain plates, the transition between the narrower longitudinal end region and the narrowing region along the longitudinal chain path is located, in an embodiment, at the location of the lateral surface of the chain roller located between the narrower longitudinal end region, or is at a distance of at least no more than 5%, or in another embodiment no more

than 3%, of the radius of this chain roller from the lateral surface. As a result, the clear width between the chain plates increases, as far as possible directly, from the lateral surface of the chain roller of the chain link in the narrower longitudinal end region along the longitudinal chain path towards the chain roller, accommodated between the chain plates in the wider longitudinal end region of the chain link, of the following chain link.

[0081] On account of the offset shape of the chain link with a narrower and a wider longitudinal end, different local movement spaces of the bicycle chain or of a chain link, relative to a tooth engaging therein along the transverse chain axis at the two different tooth flanks: leading and trailing tooth flank, are almost unavoidable. As a result of the trapezoidal shape in the region of the reference plane, it is possible, however, for the chain link and thus the bicycle chain to be moved along the transverse chain axis in the region of at least one of the two tooth flanks of a chain wheel tooth engaging therein or to be pivoted about a pivot axis parallel to the vertical chain axis. The possibility of pivoting the bicycle chain about a pivot axis parallel to the vertical chain axis, that is to say a pivot axis parallel to the radial extension direction of the tooth engaging in the chain, means a possibility of pivoting the bicycle chain relative to the respective assembly planes of mutually adjacent coaxial sprockets and thus of arranging the chain in a connecting section which connects together two coaxial chain wheels of different sizes of a chain wheel assembly. This considerably increases the shifting readiness of the above-discussed bicycle chain.

[0082] According to a second embodiment of the present disclosure, the axial movement capacity, with respect to the axis of rotation of the chain wheel bearing the chain wheel tooth, within the tooth engagement space can be provided in that both the first offset region and the second offset region of a chain link are located, at least in the reference plane, closer to the narrower longitudinal end region than to the wider longitudinal end region of the chain link. In other words, both the first offset region and the second offset region of a chain link can be located, in the reference plane, closer to a chain roller axis passing through the narrower longitudinal end region than to a chain roller axis passing through the wider longitudinal end region. For this embodiment, too, it is the case that, at least in the reference plane, also in the abovementioned further parallel viewing planes, on the mutually facing inner sides of the chain plates, the transition between the narrower longitudinal end region and the narrowing region along the longitudinal chain path is located at the location of the lateral surface of the chain roller located between the narrower longitudinal end region, or is at a distance of at least no more than 5%, or in another embodiment no more than 3%, of the radius of this chain roller from the lateral surface.

[0083] The first offset region as the transition between the narrowing region and the wider longitudinal end region is located, on the mutually facing inner sides of the chain plates of the chain link of the second embodiment, at least in the reference plane, also in the abovementioned further viewing planes parallel to the reference plane, closer to the chain roller, located in the narrower longitudinal end region, of the chain link than to the chain roller, accommodated in the wider longitudinal end region, of the following chain roller along the longitudinal chain path. In this way, the narrowing region can be kept short, with the result that the tooth engagement space, at least in the reference plane, can have a clear width to be measured over at least 50%, or in another embodiment over at least 60%, of the spacing, to be measured along the longitudinal chain path, between the lateral surfaces of chain rollers that immediately follow one another, said clear width corresponding to the clear width between the chain plates in the wider longitudinal end region.

[0084] According to a further embodiment of the present disclosure, the possibility of axial movement within the tooth engagement space with respect to the axis of rotation of the sprocket carrying the sprocket tooth can be provided by the fact that both the first offset region and the second offset region of a chain link are located closer to the wider longitudinal end region than to the narrower longitudinal end region of the chain link in the reference plane. As a result, the tooth engagement space, which is enclosed along the chain width axis by the chain plates of a chain link and along the longitudinal chain path by the two chain rollers arranged between the chain plates of the chain link, has a trapezoidal cross-sectional section and a rectangular cross-sectional section in the reference plane (BE) as a sectional plane. In other words, the tooth engagement space is composed of the rectangular cross-sectional section and the trapezoidal cross-sectional section.

[0085] According to a further embodiment of the disclosure, the possibility of axial movement within the tooth engagement space with respect to the axis of rotation of the sprocket carrying the sprocket tooth can be provided by the fact that flat chain plates opposite one another along the chain width axis are formed of a plurality of chain links with offset regions which differ from one another. Such embodiments are described below. The advantages of using chain links in which the opposing chain plates are formed with differing offset regions come into play above all when the chains are used in arrangements in which shifting operations are carried out, both on rear sprocket assemblies with a plurality of rear sprockets (for example on sprocket cassettes) and on front chainring assemblies with a plurality of chainrings using corresponding derailleurs. The chain plates with their corresponding offset regions can be specially adapted to the respective shifting directions.

[0086] According to a further embodiment of the present invention, in which the chain plates of individual chain links with offset regions which differ from one another are formed, the possibility of axial movement within the tooth engagement space with respect to the axis of rotation of the sprocket carrying the sprocket tooth can be provided in that a first chain plate of a chain link has a first offset region and a second offset region, which are both located in the reference plane closer to the narrower longitudinal end region than to the wider longitudinal end region of the chain link, and in that a second chain link plate of the chain link located opposite the first chain link plate along the chain width axis has a first offset region located in the reference plane closer to the wider longitudinal end region and a second offset region located in the reference plane closer to the narrower longitudinal end region.

[0087] As an alternative to this embodiment of the chain with chain links with differently offset chain plates, according to a further embodiment variant it can be provided that a first chain plate of a chain link has a first offset region located closer to the wider longitudinal end region in the reference plane and a second offset region located closer to

the narrower longitudinal end region in the reference plane, and in that a second chain link plate of the chain link lying opposite the first chain link plate along the chain width axis has a first offset region and a second offset region, both of which are located in the reference plane closer to the narrower longitudinal end region than to the wider longitudinal end region of the chain link.

[0088] As a further alternative to this embodiment of the chain with chain links with differently offset chain plates, it can be provided according to a further embodiment variant that a first chain plate of a chain link has a first offset region and a second offset region, both of which are located in the reference plane closer to the wider longitudinal end region than to the narrower longitudinal end region of the chain link, and in that a second chain link plate of the chain link located opposite the chain link plate along the chain width axis a first offset region located in the reference plane closer to the wider longitudinal end and a second offset region located closer to the narrower longitudinal end has.

[0089] As a further alternative to this embodiment of the chain with chain links with differently offset chain plates, it can be provided according to a further embodiment variant that a first chain plate of a chain link has a first offset region located closer to the wider longitudinal end in the reference plane and a second offset region located closer to the narrower longitudinal end, and in that a second chain link plate of the chain link lying opposite the chain link plate along the chain width axis has a first offset region and a second offset region, both of which are located in the reference plane closer to the wider longitudinal end region than to the narrower longitudinal end region of the chain link.

[0090] In the described above chain types, in which different offset regions are used, the tooth engagement space, which along the chain width axis by is enclosed the chain plates of a chain link and along the longitudinal chain path by the two chain rollers arranged between the chain plates of the chain link, has two trapezoidal cross-sectional sections in the reference plane as the sectional plane.

[0091] As a further alternative to this embodiment of the chain with chain links with differently offset chain plates, it can be provided according to a further embodiment variant that a first chain plate of a chain link has a first offset region and a second offset region, both of which are located in the reference plane closer to the wider longitudinal end region than to the narrower longitudinal end region of the chain link, and in that a second link plate of the chain link lying opposite the first link plate along the chain width axis has a first offset region and a second offset region, both of which are located in the reference plane closer to the narrower longitudinal end region than to the wider longitudinal end region of the chain link.

[0092] As a further alternative to this embodiment of the chain with chain links with differently offset chain plates, it can be provided according to a further embodiment variant that a first chain plate of a chain link has a first offset region and a second offset region, both of which are located in the reference plane closer to the narrower longitudinal end region than to the wider longitudinal end region of the chain link, and in that a second link plate of the chain link lying opposite the first link plate along the chain width axis has a first offset region and a second offset region, both of which are located in the reference plane closer to the wider longitudinal end region than to the narrower longitudinal end region of the chain link.

[0093] In these other chain types, it is provided that the tooth engagement space, which is enclosed along the chain width axis by the chain plates of a chain link and along the longitudinal chain path by the two chain rollers arranged between the chain plates of the chain link, has two trapezoidal cross-sectional sections in the reference plane as a sectional plane and a rectangular cross-sectional section arranged between these.

[0094] The various embodiments of the chain links mentioned above each provide a tooth engagement space with a larger cross-sectional area, compared with the prior art, in the reference plane, or even one with a greater volume. The guiding properties of a bicycle chain formed from such chain links are reduced compared with the offset bicycle chains known from the prior art cited at the beginning, this normally being undesired, but, in the case of the above-discussed bicycle chain with offset chain links, creating the shifting capability thereof between adjacent chain wheels by a derailleur.

[0095] An undesired restriction of the movement space of the bicycle chain relative to a chain wheel tooth engaging in the tooth engagement space of one of the chain links thereof can also be avoided in that the chain plates, at least in the reference plane, in particular in a height portion that contains the reference plane and extends along the vertical chain axis, and at least at the narrower longitudinal end, project beyond the chain roller, arranged there, along the longitudinal chain path by no more than 5% of the radius of the chain roller. The less the chain plates project beyond the chain roller along the longitudinal chain path, the less the chain plates project into the tooth engagement space and take up a region thereof. Available space that is already occupied by chain plates can no longer be occupied by a chain wheel tooth. The situation at the wider longitudinal end of a chain link corresponds, with regard to the projecting of the chain plates beyond the chain roller arranged in the wider longitudinal end region, to the situation of projecting beyond at the narrower longitudinal end. Since, however, in the case of the bicycle chain according to the disclosure, the narrower end regions of a chain link along the longitudinal chain path project into the wider longitudinal end regions of the immediately adjacent chain link, protrusion of the chain plates along the longitudinal chain path beyond the chain rollers at the narrower longitudinal end has a much greater influence on the design and the size of the tooth engagement space than protrusion of the chain plates beyond the chain rollers at the wider longitudinal end. The chain plates of a plurality of chain links, or in another embodiment of all the chain links, project, in a height portion extending along the vertical chain axis, in particular in such a height portion containing the reference plane, at the narrower longitudinal end, beyond the chain roller accommodated there, for the abovementioned reasons, by no more than 3%, more or in another embodiment not at all, i.e. the chain plates end flush with the chain roller.

[0096] In another embodiment, the chain plates remain, at least in the reference plane and at least at the narrower longitudinal end, at least partially behind the lateral surface of the chain roller accommodated in the narrower longitudinal end region. This means that the lateral surface of the chain roller then projects at least partially beyond an edge of

the chain plate in the region of the narrower longitudinal end region. This is the case at least for the abovementioned height portion containing the reference plane. As a result, it is possible to ensure that force between a chain wheel tooth engaging in the tooth engagement space of a chain link and a narrower longitudinal end, delimiting the tooth engagement space, of a chain link is transmitted only by bearing engagement between the engaging tooth and the chain roller, but not by bearing engagement between the engaging tooth and an edge of the chain plate. This is particularly the case for the narrower longitudinal end of a chain link, which projects into a wider longitudinal end region of another chain link. This narrower longitudinal end delimits the tooth engagement region that follows the chain link with the narrower longitudinal end along the longitudinal chain path and is formed between the chain plates of the chain link with the wider longitudinal end region. In order for it to be possible to provide sufficient guidance for the rotary movement of the chain roller about its chain roller axis in the narrower longitudinal end region, the chain roller projects beyond the narrower longitudinal end of the chain plates bearing it at least in the abovementioned height portion by no more than 5% of the chain roller radius, optionally by no more than 3%.

[0097] Projecting of the chain roller beyond the chain plate longitudinal ends, or vice versa, with a degree of projection of no more than 5% of the chain roller radius is considered, within the meaning of the present application, to be so low that the longitudinal ends of the chain plates, in the reference plane, merely lengthen the lateral line of the lateral surface of the chain roller to form a trapezoidal cross section of the tooth engagement region.

[0098] For a shifting operation, the establishment of engagement of a chain wheel tooth of the target chain wheel, onto which the chain is intended to be shifted in the shifting operation, is paramount. In this case, it is useful for the chain wheel tooth of the target chain wheel to be supported, on moving into the tooth engagement space of a chain link, by the physical design of the chain link. Such support can be achieved structurally in that, for the chain plates of at least a plurality of the chain links, or in another embodiment of all the chain links, it is the case that a longitudinal spacing, to be measured along the longitudinal chain path, of the first and the second offset region of a chain plate from one another, at least in the chain plate inner surface, is greater in at least one virtual viewing plane parallel to the reference plane than in the reference plane. The viewing plane is located in this case, on account of its spacing from the reference plane which is defined by the pivot axis of chain links connected together in an articulated manner, closer to a longitudinal edge, extending along the longitudinal chain path, of the respective chain link than the reference plane. The first and the second offset region usually form, at least on the chain plate inner surfaces, a physical step or physical kink which also extends along the vertical chain axis and which can serve to guide a relative movement of the respective chain link along the vertical chain axis relative to a tooth entering the tooth engagement space thereof. As a result of the first and the second offset region being designed such that their spacing is greater in the outlined viewing plane than in the reference plane, the space between the steps or kinks formed by the offset regions can narrow from the longitudinal edge of the chain link towards the reference plane thereof, and act, so to speak, as an insertion aid for a tooth entering the tooth engagement space.

[0099] Ideally, the virtual pivot axes of chain links that immediately follow one another along the longitudinal chain path are also the virtual axes of rotation of the chain rollers arranged between the chain plates of a chain link.

[0100] In principle, it is sufficient for only one offset region, at least in a chain plate inner surface, to have a profile both with a component along the vertical chain axis and with a component along the longitudinal chain path, while the other offset region, as in the prior art, can extend substantially parallel to the vertical chain axis. However, the chain plates can provide a greater insertion aid when their two offset regions, at least in the chain plate inner surface, each have a component along the longitudinal chain path and a component along the vertical chain axis.

[0101] On account of the offsets leading to a narrower and a wider longitudinal end, the offset chain links may not be formed symmetrically with respect to a plane of symmetry orthogonal to the longitudinal chain path. To achieve good support for an insertion movement of a chain wheel tooth along the vertical chain axis into the tooth engagement space, it is possible, however, for at least the part, located in the chain plate inner surface of a chain plate, of the first and of the second offset region, when viewing a projection of the two offset regions along the transverse chain axis onto a projection plane orthogonal to the transverse chain axis, to be formed, in relation to the abovementioned plane of symmetry orthogonal to the longitudinal chain path, at least partially, or in another embodiment along a majority of the extension length of the abovementioned parts, or in yet another embodiment entirely in mirror-symmetric manner.

[0102] The bicycle chain is, in another embodiment, formed in a mirror-symmetric manner with respect to a plane of symmetry that is oriented orthogonally to the transverse chain axis.

[0103] The bicycle chain may also be formed in a mirror-symmetric manner with respect to the reference plane. This does not have to be the case, however. When the bicycle chain, or the chain links thereof, are not formed in a mirror-symmetric manner with respect to the reference plane and the bicycle chain, starting from its open stretched-out state is intended to form a functioning closed circulating bicycle chain only by way of a single possible closing movement, the viewing plane is, in another embodiment, located on that side of the reference plane that faces the radially inner edge of the closed circulating bicycle chain, since the chain wheel tooth enters the tooth intermediate space and exits the latter again only at this radially inner edge.

[0104] What was stated above only for a single viewing plane applies to the achievement of the desired support of the movement of a chain wheel tooth into the tooth engagement space for a plurality of viewing planes that are parallel both to one another and to the reference plane, specifically such that the longitudinal spacing of the first and the second offset region from one another, at least in the chain plate inner surface of one chain plate, or of both chain plates, of a chain link, is greater in a plurality of virtual viewing planes parallel to the reference plane than in the reference plane, wherein the longitudinal spacing becomes greater with increasing distance of the viewing planes from the reference plane. With increasing distance of the viewing planes from the reference plane, the viewing planes become closer to a

longitudinal edge, extending along the longitudinal chain path, of the bicycle chain, wherein the engagement of the chain wheel tooth with the bicycle chain begins.

[0105] In principle, the spacing, becoming greater towards the longitudinal edge of the bicycle chain, along the longitudinal chain path between the first and the second offset region, at least on the chain plate inner surface of a chain plate, can be achieved by a rectilinear offset region from the first and second offset region, said rectilinear offset region extending only non-parallel to the vertical chain axis. Considering the fact that, between the chain plates of one and the same chain link, there are chain rollers which likewise support the insertion of a chain wheel tooth into the tooth engagement space by way of their cylindrical lateral surfaces, at least one offset region from the first and second offset region is formed, at least on the chain plate portion located on one side of the reference plane, at least on the chain plate inner surface, optionally also on the chain plate outer surface, so as to extend at least partially in a curved manner. An axis of curvature determining the curvature of the at least one offset region extends parallel to the transverse chain axis or is inclined with respect to the latter by no more than 20°, and in another embodiment by no more than 10°.

[0106] For the above-described second embodiment of an offset chain link, it is sufficient for only the second offset region, located closer to the chain roller in the narrower longitudinal end region, at least on the chain plate inner surface, optionally also on the chain plate outer surface, to be formed so as to extend in a curved manner as described above.

[0107] To achieve an even greater funnel effect of the offset regions by way of a spacing, increasing even more greatly with distance from the reference plane, between the first and second offset region, particularly both offset regions, at least on the chain plate inner surface, are formed so as to extend at least partially in a curved manner. In this case, a curvature which curves the respective offset region, with increasing distance from the reference plane, in particular towards the radially inner longitudinal edge of the bicycle chain, at least on the chain plate inner surface, away from a central plane, orthogonal to the longitudinal chain path, of a chain link. The chain plates are produced so as to form at least one curved offset region with involvement of a stamping process which allows the formation of curved offset regions in a simple manner. Using such a stamping process, at least one offset region can also be formed in a curved manner on the chain plate inner surface.

[0108] In principle, for a plurality of chain plates, and in another embodiment for all the chain plates, of the bicycle chain, it may be the case that the chain plates of the chain link are formed in a mirror-symmetric manner with respect to the reference plane. In a longitudinal central region of the chain plates and of the chain link, the height dimension of the chain plates along the vertical chain axis may be reduced compared with longitudinal portions which comprise the pivot axes of adjacent chain links, for instance in order to make it easier to move the chain plate on shifting radially outwardly over a tooth tip. In the case of a design of the chain links, in particular of the entire bicycle chain, which is mirror-symmetric with respect to the reference plane, it is almost impossible to arrange the bicycle chain incorrectly on a drive train having two chain wheels or only on one chain wheel.

[0109] To achieve greater tensile strength while at the same time having a concave curvature of a longitudinal peripheral portion, comprising the longitudinal centre of a chain plate, so as to make it easier to move the chain plate axially with respect to the axis of rotation of a target chain wheel radially outwardly past a tooth tip, it may be the case, for the chain plates of a plurality of chain links, or in another embodiment of all the chain links, of the bicycle chain, that only one chain plate longitudinal edge, delimiting the respective chain plate along the vertical chain axis, to be formed in a concavely curved manner in a longitudinal portion comprising the longitudinal centre of the chain plate. The opposite chain plate longitudinal edge, along the vertical chain axis, of the same chain plate may, by contrast, be formed in a rectilinear manner or with a smaller curvature. Such chain plates are known, for example from Taiwan Patent TW M268483 U or from U.S. Pat. No. 9,890,830 B2, already mentioned above. The chain is then assembled such that the chain plate longitudinal edges are located with the concavely curved longitudinal central portion on the engagement side of the chain links, on which side the entry of a chain wheel tooth into the tooth engagement space takes place. In the case of a closed circulating bicycle chain, this is the radially inner chain plate longitudinal edge.

[0110] As an alternative or additional insertion aid for supporting an engagement movement of a chain wheel tooth into the tooth engagement space, the chain plate longitudinal edge may have, in its longitudinal central portion, a bevel that extends along the chain plate longitudinal edge. The bevel may be formed on both chain plates of a chain link, specifically such that the spacing of the chain plate inner surfaces that are opposite along the transverse chain axis becomes smaller with increasing proximity to the reference surface.

[0111] As has already been set out above, to reinforce the insertion support for a chain wheel tooth into the tooth engagement space, in an embodiment both offset regions from the first and the second offset region are formed at least partially in a curved manner at least on the same chain plate portion between the reference plane and a longitudinal edge of the chain plate, at least in the chain plate inner surface. This is the case for a plurality of chain links, or in another embodiment for all the chain links of the bicycle chain, and in yet another embodiment for both chain plates of a chain link.

[0112] The direction of curvature of the at least one offset region formed in a curved manner at least in the chain plate inner surface has also already been discussed above. In other words, the direction of curvature of the at least one offset region, partially curved at least in the chain plate inner surface, from the first and second offset region is such that it is concavely curved as seen from the chain roller axis of rotation of the chain roller located closer to the partially curved offset region, and is convexly curved as seen from the chain roller axis of rotation of the chain roller located farther away from the partially curved offset region. Then, the tooth engagement space between the first and the second offset region widens in the direction away from the reference plate to a longitudinal edge of the chain link, at which tooth engagement takes place, gradually, i.e. the spacing, to be measured along the longitudinal path, of the first and the second offset region from one another increases disproportionately with increasing distance from the reference plane.

[0113] According to an embodiment of the present disclosure, at least one offset region from the first and the second offset region, or both offset regions, at least in the chain plate inner surface, may be formed at least partially concentrically with the chain roller located closest to the respective offset region. Then, the first and/or the second offset region, at least in the chain plate inner surface, may extend at least partially parallel to the lateral surface of the chain roller located closest to it. In another embodiment, the radius of the curved portion of the first and/or of the second offset region, at least in the chain plate inner surface, differs from the radius of the chain roller located closest to it by no more than 5%, or in another embodiment by no more than 3%, with respect to the radius of the chain roller. In this way, a gap or space, favouring undesired accumulation of dirt, between an end face, facing in the direction of its chain roller axis, of the chain roller and the chain plate inner surface located closest to it can be reduced or even avoided completely.

[0114] For very good movement guidance of the chain roller in its rotary movement about its chain roller axis relative to the chain plates of a chain link, in some embodiments a plurality of the chain links, or in other embodiments all the chain links, of the bicycle chain, that each of the chain plates of a chain link, on its side facing the chain roller, has a planar surface portion, located in the extension of the chain roller, optionally adjacent to the chain roller, in the wider longitudinal end region and/or in the narrower longitudinal end region.

[0115] Between planar surface portions of the chain plate inner surface, in an embodiment of the operational bicycle chain, there extends a pin and/or a sleeve as a hollow pin. In the following text, for the sake of simplicity, only a pin is mentioned. This designation also includes a sleeve as a hollow pin. For a plurality of the chain links, for all the chain links, of the bicycle chain, it is the case that the pin connects together the chain plates, located opposite one another along the transverse chain axis, of the respective chain link in the wider longitudinal end region of the chain link. Moreover, the pin may carry a chain roller accommodated between the chain plates. On account of the particular design, mentioned at the beginning, of a chain link, the pin, which extends along the transverse chain axis, in particular parallel to the transverse chain axis, passes through the chain plates of a chain link in the narrower longitudinal end region and projects, in the wider longitudinal end region of the chain link that immediately follows along the longitudinal chain path, into the chain plates thereof. This is because a narrower longitudinal end region of a chain link projects, as described at the beginning, into the wider longitudinal end region of the chain link, following along the longitudinal chain path, between the chain plates thereof.

[0116] The shifting readiness of the above-discussed chain is also supported in that the pins that connect together the chain plates of a chain link do not, in an embodiment, protrude beyond the chain plates at the outer side of the latter. In this way, a greater local width dimension of the bicycle chain in the region of the pins can be avoided. In some embodiments, the pins end flush with a chain plater outer surface of the chain plates. In this way, at the outer side, facing away from the chain rollers along the transverse chain axis, of the chain links, it is possible to avoid steps, which may have a negative effect: if the pins project beyond the chain plate outer surfaces, a step formed in this way may have the effect that the bicycle chain undesirably gets caught, with the longitudinal end, protruding from its lateral surface, of a pin, on a contour on a chain wheel and thus impedes a smooth movement, in particular shifting movement, of the above-discussed bicycle chain. If, by contrast, the pins remain behind the chain plate outer surface, a recess arises, in which dirt can undesirably accumulate.

[0117] In particular, according to an embodiment of the disclosure, it may be provided that for a plurality of the chain rollers, each of the chain rollers is arranged on a pin. A bearing sleeve is provided between the pin and the respective chain roller. The bearing sleeve extends along a pivot axis and has an axial end face or a radial end region at at least one of its end sections. The bearing sleeve is in frictional and/or positive engagement with an associated chain link via the axial end face or the radial end region.

[0118] In order to increase the lateral mobility of the chain, it may also be provided that, for a plurality of the chain links, at least one of the chain plates is provided with a chamfer at the wider longitudinal end of the chain link along the longitudinal chain path on its inner side facing the associated chain roller when viewed in the reference plane as the cutting plane, or/and that at least one of the chain plates at the narrower longitudinal end of the chain link along the longitudinal chain path is provided with a chamfer on its outer side facing away from the associated chain roller when viewed in the reference plane as a sectional plane.

[0119] In order to reduce the wear of a guide plate of a front derailleur, it can be provided that for a plurality of the chain links, at least one of the chain plates is provided with a chamfer at the wider longitudinal end of the chain link on its outer sides facing away from the associated chain roller, which chamfer extends at least in sections along an outer contour of the chain plate. The design of the chain links with chain plates with a corresponding chamfer prevents the sharp-edged outer contour of the chain plate from rubbing against the guide plate of the front derailleur and causing severe wear on it.

[0120] In an embodiment, a first offset region at least partially delimits a planar surface portion in a wider longitudinal end region, at least in a chain plate inner surface, optionally also in a chain plate outer surface, such that a structural design of a chain plate can be kept simple and separate delimiting of the planar surface portion is not required. Alternatively, or additionally, the second offset region, for the same reason, may at least partially delimit the planar surface portion in the narrower longitudinal end region, at least in the chain plate inner surface, optionally also in the chain plate outer surface. In another embodiment, a first and/or a second offset region delimits or delimit planar surface portions, located closest to them, in longitudinal end regions, located respectively closest to them, of chain plates not just partially, but completely.

[0121] The present disclosure also relates to a bicycle drive assembly comprising, as chain wheel assemblies, a chainring assembly and a bicycle sprocket assembly arranged at a distance therefrom, wherein the chainring assembly and the bicycle sprocket assembly are each rotatable about mutually parallel assembly axes, and wherein the bicycle drive assembly comprises a bicycle chain, as described and developed above, which runs in a closed manner about the assembly axes and, in order to transmit torque from the chainring assembly to the bicycle sprocket assembly, is in form-fitting engagement with each of these assemblies.

[0122] The shifting bicycle chain, discussed herein, with the design mentioned at the beginning, can be shifted, in a manner known per se, by a derailleur from a starting chain wheel to a target chain wheel. In order for a shifting operation to be possible in the first place, at least one chain wheel assembly from the chainring assembly and the bicycle sprocket assembly must have, as a shifting chain wheel assembly, at least two coaxial chain wheels with different numbers of chain wheel teeth.

[0123] To solve the abovementioned problem, the bicycle drive assembly has a derailleur which is displaceable at least also along the parallel assembly axes, has the bicycle chain passing through it, and is designed, by being displaced along the common assembly axis of the at least two coaxial chain wheels, to shift the bicycle chain from one of the at least two coaxial chain wheels, with which the bicycle chain is engaged, onto at least another of the at least two coaxial chain wheels, in order to bring the other chain wheel into engagement with the bicycle chain.

[0124] The bicycle drive assembly is configured such that, upon engagement of chain wheel teeth in tooth engagement spaces of the chain links of the bicycle chain, force transmission between the respective chain wheel tooth and the chain link takes place in a form-fitting manner only via a chain roller of the respective chain link, not via the chain plates of the chain link. Any incidental friction forces, transmitted by a force fit or friction fit, between a chain wheel tooth and a chain plate in contact therewith are not intended to be taken into consideration on account of their negligible magnitude compared with the force transmitted between the form-fitting tooth flank and chain roller. In an embodiment, the chain rollers and the chain plates are dimensioned such that the load-bearing tooth flank of a chain wheel tooth engaged in a tooth engagement space passes into bearing engagement only with the lateral surface of a chain roller of the chain link, but not with a chain plate edge located between the chain plate inner surface and chain plate outer surface. This can be achieved by the abovementioned partial dimensioning of the chain plates of a chain link relative to the chain rollers arranged therebetween along the transverse chain axis. For example, the chain plates, in portions which, during operation of the bicycle drive assembly, face an assembly axis and a tooth engaging in a tooth engagement space of a chain link, may not protrude radially beyond the lateral surface of the chain roller with respect to the chain roller axis of the closest chain roller or may even remain radially behind the lateral surface of the chain roller, such that the lateral surface of the chain roller physically prevents contact of the tooth flank of the chain wheel teeth with the edge of the chain plates.

[0125] The coaxial chain wheels of the shifting chain wheel assembly are arranged in a direction referred to in the following text as a "sequential direction" with decreasing numbers of chain wheel teeth. On a target chain wheel with a larger number of teeth, in order to carry out a first shifting operation from a starting chain wheel with a smaller number of teeth to a target chain wheel, adjacent thereto counter to the sequential direction, with a larger number of teeth than the starting chain wheel, on the target chain wheel at least one tooth is in the form of a catching tooth for the first shifting operation. A plurality, or even, in particular for chain wheels with only one shifting lane, the majority, of standard teeth of the target chain wheel have a uniform, matching tooth shape. These standard teeth with this uniform, matching tooth shape serve as a rule only for transmitting force or torque between the chain and the chain wheel by physical engagement of the standard teeth in the tooth engagement spaces of the chain links of the bicycle chain. The tooth shape of the catching tooth differs from this tooth shape of the standard teeth. The tooth shape of the catching tooth facilitates the physical form-fitting engagement of the bicycle chain leaving the starting chain wheel under the influence of the derailleur. The catching tooth is therefore that tooth of the target chain wheel that, during the first shifting operation discussed here, passes, as first tooth, into a tooth engagement space of a chain link of the bicycle chain and thus engages the chain with the target chain wheel.

[0126] To make it easier to engage in the bicycle chain shifted to the target chain wheel or in the tooth engagement spaces of the chain links thereof, the catching tooth has, in an embodiment, on its tooth side facing away from the starting chain wheel, a catching recess, or a catching recess at least partially in the form of a catching bevel. In order to make it easier, as a result of the catching recess, for the catching tooth to enter a tooth engagement space of a chain link of the bicycle chain displaced axially in the direction of the target chain wheel by the derailleur, the catching recess extends from the tip of the catching tooth radially inwards in the direction of the assembly axis. In this way, the catching recess brings about a reduction in thickness of the tooth tip of the catching tooth on the side of the target chain wheel facing away from the starting chain wheel, the consequence of this being an effective axial displacement of the tooth tip of the catching tooth towards the starting chain wheel. A meshing surface or, in the case of an axial extent of the meshing surface of zero, a meshing line as the formation of the catching tooth that extends along a circumferential path about the assembly axis and delimits the catching tooth or the tooth tip thereof radially on the outside is located, on account of the described catching recess, closer to the starting chain wheel. Furthermore, the tooth tip of the catching tooth is, as a result of the catching recess, axially thinner than a tooth tip of the standard teeth, such that the catching tooth, compared with the standard teeth, can engage more easily in a tooth engagement space of a chain link of the bicycle chain moved from the starting chain wheel towards the catching tooth.

[0127] The described catching recess may, at least in the radial portion of the catching tooth that extends directly from the meshing line or meshing surface of the catching tooth, may be in the form of a catching bevel on the tooth tip and thus serve as a kind of lead-in chamfer of the catching tooth into a tooth engagement space. The catching bevel is then, in some embodiments, formed such that the radial thickness of the catching tooth increases with increasing radial distance from the meshing line or meshing surface of the catching tooth in the direction of the assembly axis. The surface of the catching bevel may be formed in a manner inclined about an inclination axis that is tangential to a circumferential path about the assembly axis or that is inclined with respect to a tangent to a circumferential path about the assembly axis by no more than 20°, or in another embodiment by no more than 10°.

[0128] The catching recess on the side of the catching tooth facing away from the starting chain wheel may extend from the meshing line or meshing surface of the tooth tip of the catching tooth in the direction of the assembly axis over at least 25% of the radial extension of the catching tooth, or

in another embodiment over at least 35%, or optionally over at least 50% of the radial extension of the catching tooth. The radial extension of the catching tooth is intended to be determined starting from the radial coordinate of the root circle of the target chain wheel. As a result of the design of the catching recess of the catching tooth starting from the meshing line or meshing surface as far as the radial centre of the catching tooth or even beyond the latter, cross-chaining, functionally necessary during the first shifting operation discussed herein, can be reduced to a degree. For sufficient guidance of the bicycle chain by the catching tooth following successful shifting of the bicycle chain to the target chain wheel with conventional tooth engagement, the catching recess, in some embodiments, does not extend radially as far as the root circle of the sprocket of the target chain wheel. In another embodiment, the catching recess extends from the tooth tip of the catching tooth over no more than 80% of the radial dimension of the catching tooth. The catching recess likewise extends, in some embodiments, over the entire circumferential extension of the catching tooth along a circumferential path about the assembly axis.

[0129] An outer surface portion, located radially farther away from the tooth tip on the side of the target chain wheel facing away from the starting chain wheel, of the catching tooth as a further boundary surface portion of the catching recess may, for better guidance of the chain after deeper penetration of the catching tooth into the tooth engagement space, have a more radial and less axial course than an outer surface portion, starting directly from the meshing line or meshing surface, of the catching tooth, in particular than the above-described catching bevel. The outer surface portions, formed by the catching recess, of the catching tooth on the side of the target chain wheel facing away from the starting chain wheel may be formed at least partially in a polyhedral manner, forming edges at their boundary regions, and/or may at least partially be in the form of a curved common outer surface region, with at least one axis of curvature that extends predominantly or entirely tangentially to a circumferential path about the assembly axis and/or through no more than 20°, or in some embodiments 10°, with respect to a tangent to a circumferential path about the assembly axis. In another embodiment, the curvature of the curved outer surface region may, to form the outer surface portions, vary away from the meshing line or meshing surface in the radial direction towards the assembly axis, wherein the curvature is then greater closer to the meshing line or meshing surface, i.e. has a shorter radius of curvature, than radially farther away from the meshing line or meshing surface. A curvature, varying in the radial course of the catching tooth, of the outer surface thereof means a plurality of curvature axes that determine the respectively local curvature of the outer surface portions.

[0130] If the catching tooth on the tooth tip, starting from the meshing line or meshing surface, also has an inclined surface or bevel on the side facing the starting chain wheel, the catching bevel on the side facing away from the starting chain wheel is greater than the bevel, formed on the tooth tip, on the side facing the starting chain wheel.

[0131] The catching tooth may, for easier initial engagement in a tooth engagement space, be formed in a radially shorter manner than the standard teeth and/or than chain wheel teeth that are adjacent to it along a circumferential path.

[0132] The target chain wheel of the described first shifting operation may have a preparation recess in the region of a preparation tooth, directly ahead of the catching tooth in the forward-travel direction of rotation of the chain wheel assembly, on the side facing the starting chain wheel, in order to allow, in this region, during the shifting of the bicycle chain, greater axial approaching of the target chain wheel by the bicycle chain. The forward-travel direction of rotation is, in this case, the direction of rotation in which the chain wheel assembly rotates while driving a bicycle, bearing the bicycle drive assembly, for forward travel.

[0133] In an embodiment, the preparation recess extends in the radial direction over the entire radial extension of the preparation tooth. The preparation recess may furthermore extend in the circumferential region of the tooth intermediate space that is directly ahead of the preparation tooth in the forward-travel direction of rotation. In order for the target chain wheel to be approached axially by the bicycle chain in as uncomplicated a manner as possible, the preparation recess may extend along a circumferential path about the assembly axis as far as the tooth that is directly ahead of the preparation tooth in the forward-travel direction of rotation, but for strength reasons does not extend beyond the circumferential centre of this tooth.

[0134] The preparation recess may radially approach the assembly axis of the chain wheel assembly differently along a circumferential path about the assembly axis, wherein the preparation recess radially approaches the assembly axis in the forward-travel direction of rotation starting from the catching tooth, in order to at least approximately reproduce the course of the bicycle chain from the starting chain wheel to the target chain wheel in the radial direction.

[0135] The catching tooth and the preparation tooth with the preparation recess form a particularly effective feature combination that promotes the shifting capability of the chain on the shifting chain wheel assembly.

[0136] In order to avoid excessive cross-chaining of the bicycle chain during the first shifting operation, the tooth that directly trails the catching tooth in relation to the forward-travel direction of rotation may have, on the chain wheel side facing away from the starting chain wheel, an auxiliary recess. In an embodiment, the trailing tooth has, in the half of its radial extension that is located radially farther out, a smaller axial thickness than a standard tooth. The auxiliary recess may be formed so as to approach the assembly axis in the circumferential direction away from the catching tooth. In some embodiments, the auxiliary recess does not extend, at both opposite circumferential ends of the trailing tooth, starting from the tooth tip, as far as the root circle of the target chain wheel. Along a circumferential path about the assembly axis, the auxiliary recess extends over the entire circumferential extension of the tooth.

[0137] In order to make it easier to insert the catching tooth into a tooth engagement space of chain links of the bicycle chain, the catching tooth may have, on its flank that is unloaded and/or ahead in the forward-travel direction of rotation, on the side facing away from the starting chain wheel, a sliding bevel that supports a first shifting operation. The sliding bevel formed on the tooth flank is designated in this way substantially to verbally distinguish it from the above-described catching bevel. In fact, during a first shifting operation, a chain link of the bicycle chain may slide, with its chain plate located farther away from the starting chain wheel, along the sliding bevel and in physical contact

therewith radially down the catching tooth in the direction of the assembly axis. During this movement, with which the abovementioned sliding contact can be associated, but does not have to be associated, the catching tooth passes more deeply into the tooth engagement space of the chain link in question and thus physically engages with the latter. The sliding bevel may be formed in an inclined manner such that a normal vector of an outer surface, formed by the sliding bevel, of the catching tooth has a circumferential vector component in the direction away from the trailing and/or load-bearing flank of the catching tooth, an axial vector component parallel to the common chain wheel assembly axis in the direction away from the starting chain wheel, and a radial vector component in the direction away from the common chain wheel assembly axis. With this configuration of the sliding bevel on the catching tooth, the catching tooth can be adapted to the shape of the tooth engagement space with its narrowing portion. The inclined position of the chain plate portions, delimiting a tooth engagement space along the transverse chain axis, relative to a plane orthogonal to the common assembly axis of the coaxial chain wheels may, in an end region along the transverse chain axis of a chain link, be reinforced further by an inclined position, brought about by the derailleur, of the chain during the first shifting operation and be reduced in the opposite end region. This results in a completely different orientation of the side faces, delimiting a tooth engagement space, of a chain link relative to a catching tooth than in conventional bicycle chains.

[0138] The sliding bevel extends from the region of the tooth tip of the catching tooth radially as far as the root of the catching tooth and in the circumferential direction into the tooth intermediate space ahead of the catching tooth in the forward-travel direction of rotation. The sliding bevel may extend in the circumferential direction into a circumferential extension portion of the tooth intermediate space between the catching tooth and the tooth directly ahead of the catching tooth in the forward-travel direction of rotation, said circumferential extension portion containing the circumferential centre of the tooth intermediate space and extending from the circumferential centre to in each case a sixth, or in another embodiment to in each case an eighth, of the tooth pitch symmetrically on both sides of the circumferential centre. The point of the tooth intermediate space that is closest to the assembly axis is usually located in the circumferential centre.

[0139] In an embodiment, a bevel, namely the sliding bevel, is formed only at a transition between two tooth sides of the catching tooth that follow one another in the circumferential direction about the catching tooth. If bevels are formed at more than one transition between two tooth sides that follow one another in the circumferential direction about the catching tooth, the sliding bevel is the greatest bevel, in particular the bevel with the greatest area, on two tooth sides of the catching tooth that follow one another in the circumferential direction about the catching tooth.

[0140] On the tooth that directly trails the catching tooth with regard to the forward-travel direction of rotation and may have the auxiliary recess, a further sliding bevel may be formed, which, in terms of shape, dimensions and location of formation, corresponds substantially to the sliding bevel of the catching tooth. What was stated above in relation to the sliding bevel of the catching tooth therefore also applies, mutatis mutandis, to a further sliding bevel on the directly trailing tooth. The further sliding bevel behaves in relation to the auxiliary recess substantially in the same way as the sliding bevel behaves in relation to the catching recess.

[0141] Desired smooth shifting of the bicycle chain from the starting chain wheel with a smaller number of chain wheel teeth to the adjacent target chain wheel with a larger number of chain wheel teeth can only take place along a first shifting lane. A first shifting lane is formed where the spacing between a first chain link engagement on the target chain wheel and a last chain wheel engagement on the starting chain wheel amounts to between 90% and 110%, or in another embodiment between 95% and 105%, of an integral multiple of the chain pitch.

[0142] On the bicycle drive assembly described herein, the number of first shifting lanes on the target chain wheel may be chosen to be less than or equal to the difference in the number of teeth between the starting chain wheel and the target chain wheel. In an embodiment, the first shifting lanes are distributed equidistantly in the circumferential direction over the circumference of the target chain wheel. Since shifting lanes can be formed with a catching tooth only discretely at circumferential locations, "equidistantly" means, in this case, that the circumferential spacing between k shifting lanes of a target chain wheel having n teeth, expressed in angular degrees, corresponds in each case to $360°/k \pm 0.5 \times 360°/n$, wherein k and n are each whole numbers and $n>k$.

[0143] According to one embodiment of the disclosure, it can be provided that the catch tooth of a first shifting lane and the tooth immediately following the catch tooth of the first shifting lane in a forward direction of rotation are designed to be shorter in the circumferential direction compared to a base tooth. This makes it possible to catch the chain more easily during a first shifting operation.

[0144] Furthermore, according to the disclosure, it can be provided that the first shifting lane has a preparatory recess. The preparatory recess is formed with a preparatory tooth. The preparatory recess extends over the tooth immediately leading the preparatory tooth in the forward direction of rotation and ends in a tooth gap between the leading tooth and the tooth immediately leading the leading tooth in the forward direction of rotation.

[0145] A further embodiment of the disclosure provides that the rear bicycle sprocket assembly has two adjacent sprockets whose number of teeth differ by only one tooth or by only two teeth, wherein at least a first shifting lane is provided. In the first shifting lanes a radial center axis of the preparatory tooth of a smaller sprocket of the two adjacent sprockets is arranged between a non-load flank of the catch tooth of a next larger sprocket on the one hand and a load flank of the tooth immediately preceding the preparatory tooth of the next larger sprocket in the forward direction of rotation on the other hand.

[0146] For the mechanical strength of the target chain wheel and consequently for the lifetime thereof, it has been found that chain wheels as target chain wheels only have to have exactly one catching tooth per shifting lane on the target chain wheel, in order to allow a reliable and repeatable shifting operation. Unlike in conventional bicycle chains with inner plate chain links and outer plate chain links, in the case of the bicycle chain discussed herein, one chain link with a uniform known shape always arrives at the sprocket of the target chain wheel in order to be engaged by the target chain wheel. In another embodiment a design with only one catching tooth per first shifting lane is provided.

[0147] The first shifting lanes need to therefore only for one relation be designed, as the chain up of a large number of chain links of one chain link type to one reference tooth compared to the shifting lanes of conventional chains is made of uniform shape. Designing the first shifting lanes for two relations from one type of chain link to one reference tooth, as necessary for conventional bicycle chains with inner and outer plate chain links was, is therefore no longer necessary. The high material removal of teeth in the area of the first shifting lanes to enable a conventional chain to engage results in a decrease in the guiding properties of the chain on the sprocket. By using the chain according to the invention with uniform chain links and the resulting alternative design of the first shifting lanes, the material removal is reduced and the guiding properties are retained.

[0148] Furthermore, the uniform shape of the chain links means that only one shifting lane concept is required compared to conventional chains with inner and outer plate chain links. Different concepts, which due to the different widths of the were due to necessary chain plates in conventional chains, are no longer necessary uniform shape of the chain links. In addition, it can be provided that the preparatory tooth of each first shifting lane is removed or completely omitted.

[0149] To make it easier to carry out a second shifting operation, in the opposite direction compared with the first shifting operation discussed above, from a starting chain wheel with a larger number of teeth to a target chain wheel, adjacent thereto in the sequential direction, with a smaller number of teeth, on the starting chain wheel, at least one tooth may be in the form of a deflector tooth with a tooth shape that differs from the matching tooth shape of the standard teeth. What was stated above applies with respect to the standard teeth. In this case, a deflector tooth is that particularly designed first tooth on the sprocket of the starting chain wheel that is passed by the bicycle chain, leaving the starting chain wheel as a result of derailleur actuation, during the second shifting operation, axially with respect to the assembly axis on the side of the deflector tooth that faces the target chain wheel. The deflector tooth is therefore the first tooth of the starting chain wheel which no longer engages in a tooth engagement space of a chain link of the bicycle chain during the second shifting operation that is now being discussed. During the second shifting operation, the deflector tooth generally trails, with respect to the forward-travel direction of rotation of the starting chain wheel, a series of successive teeth which each engage in tooth engagement spaces of chain links of the bicycle chain.

[0150] In an embodiment, a deflector tooth has, on its side facing a smaller target chain wheel, a deflector recess which extends from a tooth tip of the deflector tooth in the radial direction towards an assembly axis, beyond a root circle of the starting chain wheel. In another embodiment, a deflector recess extends, on a tooth side, pointing towards a target chain wheel, of the deflector tooth, over an entire circumferential width or over the entire radial extension of the deflector tooth.

[0151] The deflector recess, as a result of which the deflector tooth is formed in an axially thinner manner than the standard teeth of the starting chain wheel, brings about an arrangement, effectively offset axially away from the target chain wheel compared with the standard teeth, of the deflector tooth on the starting chain wheel, this making it easier for it to fulfil its function. The deflector recess may extend away from the deflector tooth in the circumferential direction and into the circumferential region of the tooth intermediate space that directly trails the deflector tooth with regard to the forward-travel direction of rotation, as far as the tooth that directly trails the deflector tooth with regard to the forward-travel direction of rotation. In an embodiment, a deflector recess does not extend, in a circumferential direction, over a circumferential centre of a directly trailing tooth, and in another embodiment no further than 20% of the circumferential dimension thereof, into said tooth at the respective radial coordinate.

[0152] The deflector recess may approach the assembly axis differently along the circumferential path about the assembly axis of the chain wheel assembly, wherein the deflector recess radially approaches the assembly axis away from the deflector tooth counter to the forward-travel direction of rotation, in order to at least approximately reproduce the course of the bicycle chain from the starting chain wheel to the target chain wheel in the radial direction.

[0153] The deflector tooth may have, on its side facing the target chain wheel, as a deflection aid, an inclined surface or bevel that extends directly from its meshing surface or meshing line, as outer surface portions, at least partially delimiting the deflector recess, of the deflector tooth. The inclined surface or bevel faces in the axial direction towards the target chain wheel and in the radial direction away from the assembly axis. As a result of the inclined surface or bevel, the meshing line or meshing surface of the deflector tooth can be located axially farther away from the target chain wheel than the meshing line or meshing surface of standard teeth of the starting chain wheel.

[0154] Outer surface portions, delimiting the deflector recess, of the deflector tooth on the side, facing the target chain wheel, of the starting chain wheel may be formed at least partially in a polyhedral manner, forming edges at their boundary regions, and/or may at least partially be in the form of a curved common outer surface region, with at least one axis of curvature that is tangential to a circumferential path about the assembly axis or is inclined through no more than 20°, or in another embodiment through no more than 10°, with respect to a tangent to a circumferential path about the assembly axis. In another embodiment, a curvature of a curved outer surface region may, to form outer surface portions, vary away from a meshing line or meshing surface in a radial direction towards an assembly axis, wherein the curvature is then greater closer to the meshing line or meshing surface, i.e. has a shorter radius of curvature, than radially farther away from the meshing line or meshing surface. A curvature, varying in the radial course of the deflector tooth, of the outer surface thereof means a plurality of curvature axes that determine the respectively local curvature of the outer surface portions.

[0155] A tooth that is directly ahead of the deflector tooth in the forward-travel direction of rotation has, as supporting tooth, on the tooth side facing away from the target chain wheel, a supporting recess, in order to reduce cross-chaining of the bicycle chain that is unavoidable during the shifting operation and to allow the bicycle chain to axially approach the target chain wheel. The leading supporting tooth has, on account of the supporting recess in the half of its radial extension that is radially farther out, a smaller axial thickness than a standard tooth. The supporting recess, which extends over the entire circumferential width of the supporting tooth, likewise does not extend, at both opposite cir-

cumferential ends of the leading tooth, starting from the tooth tip, as far as the root circle of the starting chain wheel.

[0156] The deflector tooth with the deflector recess and the supporting tooth form a particularly effective feature combination that promotes the shifting capability of the chain on the shifting chain wheel assembly.

[0157] It is also the case, for the second shifting operation that is discussed herein, that smooth shifting of the bicycle chain from the starting chain wheel with a larger number of chain wheel teeth to the adjacent target chain wheel with a smaller number of chain wheel teeth can take place only along a second shifting lane formed on the starting chain wheel. For the at least one second shifting lane, what was stated above for the first shifting lane applies. The number of second shifting lanes on the starting chain wheel is less than or equal to the difference in the number of teeth between the starting chain wheel and the target chain wheel. In another embodiment, second shifting lanes are arranged in a manner distributed equidistantly in a circumferential direction over a circumference of the starting chain wheel as defined above.

[0158] According to one embodiment of the disclosure, it may be provided that the support tooth of the second shifting lane and a tooth immediately leading the support tooth of the second shifting lane in the forward direction of rotation VD are shorter in the circumferential direction compared to a base tooth.

[0159] Furthermore, according to the disclosure, it can be provided that on the starting sprocket with a higher number of sprocket teeth, the support tooth of the second shifting lane and the tooth immediately leading the support tooth of the second shifting lane in the forward direction of rotation VD have chamfers on the flanks leading in the forward direction of rotation VD on the side facing away from the target sprocket with a lower number of sprocket teeth.

[0160] These features favor an axial approach of the chain to the target sprocket of the second shifting process when the chain is shifted and thus reduce entanglement of the bicycle chain during the second shifting process.

[0161] A further embodiment of the disclosure provides that the rear bicycle sprocket assembly has two adjacent sprockets whose numbers of teeth differ by only one tooth, a radial center axis of the deflector tooth of the second shifting lane on the next smaller sprocket being arranged between the non-load flank of the tooth immediately following the deflector tooth of the next larger sprocket in the forward direction of rotation VD on the one hand and the load flank of the support tooth of the next larger sprocket on the other hand.

[0162] To achieve high mechanical strength and a long lifetime of the starting chain wheel, each second shifting lane has exactly one deflector tooth. Alternatively, it can be provided that exactly one deflector tooth of the second shifting lane is removed or completely omitted.

[0163] The first and second shifting lanes, discussed herein, with their particularly shaped teeth: catching tooth and deflector tooth, and with their recesses: catching recess and deflector recess, optionally also with the preparation recess and/or the supporting recess and/or the auxiliary recess, are in each case always formed on the larger of the two chain wheels from the starting chain wheel and target chain wheel.

[0164] In the case of a considered chain wheel assembly with a larger and a smaller chain wheel, that chain wheel that is the target chain wheel in the first shifting operation is the starting chain wheel in the second shifting operation. The chain wheel assembly may, of course, have more than two chain wheels. In a chain wheel assembly with more than two chain wheels, each chain wheel apart from the smallest chain wheel may be both the target chain wheel in a first shifting operation and the starting chain wheel in a second shifting operation.

[0165] Ordinal numbers that are used as an attribute for a technical feature identify only an order of naming. The presence of a feature with a lower ordinal number is not a prerequisite for the presence of a feature with the same designation but with a higher ordinal number. It is thus possible theoretically for a second shifting operation to exist or be discussed without a first shifting operation.

[0166] The present application also relates to a chain wheel on its own, which is formed as per the target chain wheel described in the first shifting operation and/or which is formed as per the starting chain wheel described in the second shifting operation. Likewise, the present disclosure relates to a chain wheel assembly on its own, comprising the abovementioned chain wheel and an immediately adjacent smaller chain wheel. Optionally, the chain wheel assembly may have at least one further chain wheel with a different size, i.e. a different number of teeth.

[0167] According to one embodiment of the disclosure, it may be provided that the front chainring assembly has exactly one chainring, wherein a plurality of the teeth of the chainring have the same geometry, which is adapted to the geometry of the chain plates of a chain link of the chain.

[0168] Furthermore, it can be provided according to the disclosure that the teeth of the chainring of their load flank shave a chamfer, wherein the load flank of a tooth is arranged at a distance from the chamfer on one or both sides.

[0169] Furthermore, according to the disclosure, it can be provided that the teeth of the chainring have a non-load-bearing rear flank facing away from the load flank, which is arranged at a distance from a tooth main body.

[0170] The lateral flanks are offset from the main tooth body created by the distance between the load flank and the rear flank of the teeth, which counteract wear of the chain during operation and thus enable a longer service life of the chainring.

[0171] A further embodiment of the disclosure provides that the single-sided or double-sided chamfer of the load flank of the teeth is formed with an angle relative to the forward direction of rotation VD in radial plan view of the respective tooth, the angle being essentially matched to the geometry of the tooth engagement space of the bicycle chain, which is determined by the geometry of the chain link plates of a chain link and the chain rollers arranged between them.

[0172] According to a further embodiment of the disclosure, it may be provided that the front chainring assembly comprises a large chainring and a small chainring. The front chainring assembly is designed for a first shifting operation of a bicycle chain from the small chainring to the large chainring and a second shifting operation of a bicycle chain from the large chainring to the small chainring.

[0173] According to the disclosure, it can be provided that for a plurality of the teeth of the large chainring and/or for a plurality of the teeth of the small chainring of the front

chainring assembly, each have a chamfer on the inside of their load flanks and/or a chamfer on the outside of their load flanks.

[0174] A further embodiment of the disclosure provides for the large chainring to have a rivet on its inner side facing the small chainring and a recess leading the rivet in the forward direction of rotation VD for a first shifting operation. The rivet makes it easier to shift the chain. During the first shifting operation, the recess creates a free space for the chain to run and thus supports the initiation of the first shifting operation unhindered onto the rivet.

[0175] Furthermore, according to the disclosure, it can be provided that a first tooth immediately following the rivet in the forward direction of rotation VD a recess on the inside of the large chainring has and a chamfer on its trailing flank. In combination with the chamfer, the recess allows an axial approach of the chain to the large chainring.

[0176] According to a further embodiment, a second tooth of the large chainring following the rivet in the forward direction of rotation VD a shorter radial length than the standard teeth of the large chainring and a chamfer can have that extends along an outer side of the large chainring from the load flank to a trailing edge. The chamfer in combination with the shorter radial length favors catching a chain link during an initial shifting operation.

[0177] A further embodiment of the disclosure provides that the large chainring has at least one tooth which has a shorter radial length than a standard tooth of the large chainring and whose tooth tip is chamfered in such a way that the radially outer surface of the tooth tip slopes towards the inside of the large chainring. Depending on the positioning, the prevents tooth designed in this way the chain from shifting beyond the large chainring during a first shifting operation or supports the chain in initiating a second shifting operation at a preferred position with regard to the target chainring.

[0178] Furthermore, according to the disclosure can, the large chainring at least one chain catch pin on its outer side have, the pin being arranged radially inside and in the immediate vicinity of the teeth with respect to the assembly axis AQ. The pin prevents the chain from jumping over the large chainring during a first shifting operation.

[0179] According to one embodiment of the disclosure, it may be provided that the large chainring has at least one tooth which has a shorter radial length than a standard tooth of the large chainring and whose tooth tip is chamfered such that the radially outer surface of the tooth tip slopes towards the outside of the chainring. The at least one tooth designed in this way prevents the chain from initiating a second shifting operation at a position that does not correspond to a preferred position with respect to the target chainring.

[0180] According to the disclosure, it can apply to a plurality of the teeth of the large chainring that the teeth on the outside of the large chainring have a chamfer on the trailing rear flank in the forward direction of rotation VD, and that the teeth on the inside of the large chainring have a chamfer on the load flank of the teeth. The two chamfers enable the chain to slide on the teeth in the direction of the target chainring when a second shifting operation is initiated. This favors an axial approach of the chain to the small chainring in relation to the common assembly axis AQ.

[0181] A further embodiment of the disclosure provides that the large chainring has at least one functional tooth, wherein the load flank is arranged on the inside of the functional tooth at a distance from the main tooth body, and wherein the non-load flank trailing in the forward direction of rotation VD is arranged on the inside of the functional tooth at a distance from the main tooth body.

[0182] Furthermore, it can be provided according to the disclosure that the bicycle drive assembly comprises a derailleur gear system with a mechanically or electromechanically actuatable derailleur, wherein the derailleur has at least one, preferably two deflection pulleys, wherein the at least one deflection pulley has only teeth of the same geometry and wherein the geometry of the teeth of the deflection pulley is matched to the geometry of the tooth engagement space of the bicycle chain.

[0183] According to one embodiment of the disclosure, it may be provided that the teeth of the deflection pulley have free cuts on their leading flanks in the forward direction of rotation VD and/or free cuts on their trailing flanks with respect to the forward direction of rotation VD.

[0184] According to an embodiment of a bicycle drive assembly, when a bicycle chain is moved in a direction of rotation that drives forward travel, a narrower longitudinal end of a chain link leads and a wider longitudinal end trails. The chainring assembly of this embodiment has only one chainring, but, by contrast, the bicycle sprocket assembly has a plurality of coaxial sprockets with different numbers of teeth, such that, in this embodiment, a shifting operation is carried out only at the sprocket assembly of the rear wheel. For this shifting operation at the sprocket assembly, the specified orientation has the narrower longitudinal ends leading during forward travel.

[0185] According to a further embodiment of the bicycle drive assembly, when the bicycle chain moves in a direction of rotation that propels it forward, the wider longitudinal end of a chain link leads and the narrower longitudinal end lags.

[0186] A bicycle **2** is depicted in a perspective manner by way of example in FIG. **20**. The bicycle **2** has a frame **4**, to which a suspension front wheel fork **6**, on which a front wheel **7** is rotatably received, is fastened in a steerable manner and to which a suspension rear wheel fork **8**, on which a rear wheel **9** is rotatably received, is fastened.

[0187] The front wheel **7** is steerable via a handlebar **114** in a manner known per se. A saddle **116** allows the bicycle rider to sit while riding.

[0188] The front wheel **7** and the rear wheel **8** are each able to be braked via brake discs **118** and **120**, respectively, by corresponding brake actuation at the handlebar **114**.

[0189] The bicycle **2** is driven in a manner known per se by a crank assembly **122** with pedals **124**. A bicycle drive assembly **80** comprises, in the example illustrated, a front chainring assembly **82** with exactly one front chainring **84**. This is connected directly to the crank assembly **122** in a torque-transmitting manner. The front chainring assembly rotates, like the crank assembly **122**, about the common assembly axis AQ.

[0190] The bicycle drive assembly **80** also comprises a rear bicycle sprocket assembly **86**, which is coupled to a hub of the rear wheel **9** in a torque-transmitting manner. The bicycle sprocket assembly **86**, which has a plurality of parallel and coaxial sprockets that are connected for conjoint rotation, is illustrated in a more detailed view in FIGS. **9** and **10**. The bicycle sprocket assembly **86** rotates, like the rear wheel **9**, about the common assembly axis AO. The assembly axes AO and AQ are parallel to one another.

[0191] A bicycle chain **10**, which is described in detail below and is likewise part of the bicycle drive assembly **80**, circulates, in the operational state, in a closed manner about the chainring assembly **82** and about the bicycle sprocket assembly **86**, wherein it is in form-fitting, meshing engagement with the single front chainring **84** and with one of the sprockets of the bicycle sprocket assembly **86**. The bicycle chain **10**, transmitting torque from the chainring assembly **82** to the bicycle sprocket assembly **86**, can be shifted by a chain wheel shifter **91** having a derailleur **92** for engaging with different sprockets of the bicycle sprocket assembly **86** as the shifting chain wheel assembly of the bicycle drive assembly **80**. The rear derailleur **92**, which is the only derailleur **92** of the bicycle in the exemplary embodiment illustrated, is displaced in a manner known per se along the assembly axis AO of the sprockets of the bicycle sprocket assembly **86** either by a Bowden cable or by electrical signals as a result of corresponding actuation of associated shifters on the handlebar **114**.

[0192] In FIGS. **1** to **4**, an elongated portion of one embodiment, according to the disclosure, of a bicycle chain of the present application bears the general reference **10**. An arrow VD indicates the direction in which the respectively illustrated portion of the chain **10** moves when the drive assembly **80** is driven for forward travel.

[0193] The bicycle chain **10** extends along a virtual longitudinal chain path LB. Along this longitudinal chain path LB, substantially identical chain links **12** follow one another.

[0194] A chain link **12** has, as an offset chain link **12**, a wider longitudinal end **14** and a narrower longitudinal end **16** (see in this regard the frontmost chain link **12** in FIG. **1**). The inner chain link width iKW and the outer chain link width aKW (see in each case FIG. **4**), which is intended to be measured along a virtual transverse chain axis BA, is greater at the wider longitudinal end **14** than at the narrower longitudinal end **16**. The virtual transverse chain axis BA orthogonal to the virtual longitudinal chain path LB extends parallel to and coaxially with pivot axes S about which chain links **12** that immediately follow one another along the longitudinal chain path LB are connected so as to be pivotable relative to one another.

[0195] A virtual vertical chain axis HA that is orthogonal both to the virtual longitudinal chain path LB and to the virtual transverse chain axis BA completes the Cartesian coordinate system used herein to describe the bicycle chain **10**. The height dimension h of the bicycle chain **10** (see FIG. **2**) is intended to be measured along the virtual vertical chain axis HA.

[0196] Since the chain links **12** that immediately follow one another along the longitudinal chain path LB are connected so as to be pivotable about pivot axes S relative to one another and the bicycle chain circulates, in operation, in a closed manner about two chain wheels that are arranged at a distance from one another, the longitudinal chain path LB can and will extend in a partially curved manner during operation of the bicycle chain **10**. Likewise, in these curved portions of the bicycle chain **10**, the vertical chain axis HA will be oriented in a locally different manner in space. The smallest unit, to be considered normally to be non-deformable, of the bicycle chain **10** is a chain link **12**, and so, to illustrate the spatially different orientation of the longitudinal chain path LB and of the vertical chain axis HA, it makes sense to allocate each chain link **12** a local longitudinal chain path LB and a local vertical chain axis HA, which locally correspond to the respective longitudinal chain path LB and the vertical chain axis HA of the bicycle chain **10**. The Cartesian coordinate system used is therefore not only a coordinate system of the bicycle chain **10** but also a coordinate system of each chain link **12**.

[0197] The wider longitudinal end **14** is adjoined, along the longitudinal chain path LB in the direction of the narrower longitudinal end **16**, by a wider longitudinal end region **18**. The narrower longitudinal end **16** is adjoined, along the longitudinal chain path LB in the direction of the wider longitudinal end **14**, by a narrower longitudinal end region **20**. Located between the wider longitudinal end region **18** and the narrower longitudinal end region **20** is a narrowing portion **22**, in which the width dimension of the bicycle chain **10** or of a chain link **12** transitions from the wider dimension of the chain link **12** in the wider longitudinal end region **18** to its narrower dimension in the narrower longitudinal end region **20**.

[0198] Each chain link **12** has a chain plate **24** and a chain plate **26** formed separately from the chain link **24**, which are located opposite one another along the transverse chain axis BA and are formed in a substantially mirror-symmetric manner with respect to an axis of mirror symmetry orthogonal to the transverse chain axis BA. On account of the described mirror symmetry of variants of the chain shown in FIGS. **1** to **7**E, the description of a chain plate **24** suffices in the following text. The shape of the chain plate **26** located opposite the latter will be apparent from the described shape of the chain plate **24** taking the condition of mirror symmetry into consideration.

[0199] The chain plate **24** has a first longitudinal end region **28**, which contributes to forming the wider longitudinal end region **18** of the chain link **12**. Only because of the allocation of the first longitudinal end region **28** of the chain plate **24** to the wider longitudinal end region **18** of the chain link **12** is the first longitudinal end region **28** of the chain plate **24** referred to in the following text as the "wider" longitudinal end region **28** of the chain plate **24**.

[0200] The chain plate **24** also has a second longitudinal end region **30**, which, with the meaning given herein of "narrower" longitudinal end region **30**, contributes to forming the narrower longitudinal end region **20** of the chain link **12**.

[0201] The chosen designations of the first and the second longitudinal end regions **28** and **30**, respectively, do not provide any information about the actual width dimensions of the regions or the dimensional relationships thereof with one another.

[0202] Located along the longitudinal chain path LB, between the wider longitudinal end region **28** and the narrower longitudinal end region **30** of the chain plate **24**, is a third longitudinal portion **32**, inclined with respect to these longitudinal end regions **28** and **30**, of the chain plate **24**, said third longitudinal portion, with the present allocated meaning of narrowing portion **32** of the chain plate **24**, contributing to forming the narrowing portion **22** of the chain link **12**.

[0203] In the narrower longitudinal end region **20** of the chain link **12**, a chain roller **34** is accommodated between the narrower longitudinal end regions **30** of the chain plates **24** and **26**. The chain roller **34** is rotatable about the virtual pivot axis S relative to the chain plates **24** and **26**. The virtual pivot axis S is thus also the chain roller axis KR of the chain roller **34** of a chain link **12**.

[0204] A pin **36** extending along the transverse chain axis BA connects the chain plates **24** and **26** together in their narrow longitudinal end regions **30**. In an embodiment a hollow cylindrical chain roller **34** surrounds the pin **36** all around the latter.

[0205] As can already be seen in FIG. **1**, the narrower longitudinal end region **20** of a chain link **12** extends, along the longitudinal chain path LB, into the wider longitudinal end region **18** of a chain link **12** that is immediately adjacent along the longitudinal chain path LB. The pin **36** thus passes through not only the narrower longitudinal end regions **30** of the chain plates **24** and **26** of a chain link **12** but also the wider longitudinal end regions **28** of the chain plates **24** and **26** of the chain link **12** that is adjacent along the longitudinal chain path LB, between which the inwardly projecting narrower longitudinal end region **20** of the first-mentioned chain link **12** is accommodated. The pin **36** ends, in the region of the wider longitudinal end region **18**, flush with the respective chain plate outer surface **38** of the chain plates **24** and **26**.

[0206] A part of the chain plate inner surfaces **40** of the chain plates **24** can be seen in FIG. **1**. The chain plate inner surfaces **40** of the chain plates **24** and **26** face one another, but, by contrast, the chain plate outer surfaces **38** face away from one another.

[0207] FIGS. **2** to **4** show different views of the same bicycle chain **10** from FIG. **1**.

[0208] For greater clarity, features which apply to all the chain links **12** and the chain plates **24** thereof that face the viewer of FIG. **2**, are illustrated on different chain links **12** in FIGS. **2** to **4**, in order to spread the labelling of the figures over the drawing area.

[0209] FIG. **2** shows a side view of the bicycle chain **10** from FIG. **1** along the arrow II in FIG. **3**. The direction of view extends along the transverse chain axis BA. In the embodiment shown in FIG. **2**, the upper longitudinal edge **42** of the chain plates **24** and consequently of the chain links **12** is in the form of a rectilinear longitudinal edge **42**. The opposite longitudinal edge **44**, which is the lower one in FIG. **2**, is, by contrast, formed in a concave manner in the region of the narrowing portion **22** and **32**, respectively. In the wider longitudinal end region **18** and **28**, respectively, and in the narrower longitudinal end region **20** and **30**, respectively, the lower longitudinal edge **44** is formed, by contrast, in a convex manner. The height dimension h of a chain plate **24** and thus of a chain link **12** therefore varies along the longitudinal extension of the chain plate **24** and chain link **12**.

[0210] The engagement side of the bicycle chain **10**, at which a chain wheel tooth enters and exits a tooth engagement space **46**, shown in FIGS. **3** and **4**, of a chain link **12**, is that of the lower longitudinal edge **44**. The partially concave formation of the lower longitudinal edge **44**, which, in the case of a bicycle chain **10** circulating in a closed manner, is a radially inner longitudinal edge **44** of the bicycle chain **10**, makes it easier for the bicycle chain **10** to move over a tooth tip of a chain wheel tooth. This movement takes place when the bicycle chain **10** is shifted in the region of the concave portion of the lower longitudinal edge **44**.

[0211] The narrowing portion **22** and **32**, respectively, is that portion of the chain link **12** and of the chain plate **24**, respectively, which delimits the tooth engagement space **46** along the transverse chain axis BA. The tooth engagement space **46** is delimited, along the longitudinal chain path LB, by two immediately adjacent chain rollers **34**, or by the lateral surfaces **35** thereof.

[0212] FIG. **2** shows the reference plane BE, which is orthogonal to the drawing plane of FIG. **2**, is coincident with the longitudinal path LB, and is defined by the virtual pivot axes S of a chain link **12**.

[0213] In FIG. **2**, the narrower longitudinal end **16** of the chain link **12** is illustrated at the right-hand end of the illustrated portion of the bicycle chain **10**. At this narrower longitudinal end **16** of the chain link **12**, the chain plates **24** and **26** are flattened, as will be described in more detail below in conjunction with FIGS. **5** to **7**. At the flattened narrower longitudinal end **16**, the chain roller **34**, which is accommodated between the chain plates **24** and **26** in the narrower longitudinal end regions **30** thereof, protrudes slightly, by about 3% to 5% of the radial dimension rk of the chain roller **34** with respect to its chain roller axis KR (see FIG. **3**), beyond the narrower longitudinal end **16** of the chain link **12**, along the longitudinal chain path LB. The protrusion of the chain roller **34** beyond the narrower longitudinal end **16** occurs in a height portion **48**, extending along the vertical chain axis HA, of the chain link **12**, said height portion containing the reference plane and extending symmetrically about the reference plane.

[0214] As a result of the chain roller **34** protruding beyond the longitudinal end **16**, a chain wheel tooth, which engages in the tooth engagement space **46** delimited, along the longitudinal chain path LB, by the lateral surfaces **35** of two chain rollers **34** that follow one another, comes only into bearing engagement with the chain roller **34**, but not with a chain plate **24** or **26**, for instance with a portion of the peripheral edge of the chain plate **24** or **26**. As a result, force between the bicycle chain **10** and a chain wheel tooth can be transmitted only via the chain rollers **34** that are rotatable about their chain roller axis KR.

[0215] A chain wheel tooth **50** engaging in a tooth engagement space **46** is illustrated schematically and by way of example for illustration in FIG. **4**. The chain wheel tooth **50** in FIG. **4** is, like the entire bicycle chain **10**, illustrated in section in the reference plane BE.

[0216] The tooth engagement space **46** has, in the sectional illustration in FIG. **4**, in the reference plane BE, a trapezoidal shape which allows the bicycle chain **10** to rotate relative to the engaging tooth **50** about an axis of rotation parallel to its vertical chain axis HA. This rotation makes it possible to incline the chain relative to parallel chain wheel planes of two coaxial chain wheels, such that the inclined bicycle chain **10** can bridge the spacing between the two parallel chain wheel planes and consequently between the two coaxial chain wheels and can be shifted from one of the parallel chain wheels to the other in each case. On account of the trapezoidal shape of the tooth engagement space **46** at least in the reference plane BE, the clear inner chain link width iKW decreases, along the longitudinal chain path LB, from the wider longitudinal end region **18** to the narrower longitudinal end region **20**. The decrease in the clear inner chain link width iKW is linear, constant and continuous.

[0217] The engagement situation in FIG. **4** is an engagement situation in which the bicycle chain **10**, which has been moved to the right along the longitudinal chain path LB in FIG. **4**, transmits force to the chain wheel tooth **50**. This

situation is a typical engagement situation, as occurs at rear wheel sprockets at which the bicycle chain **10** transmits force or torque.

[0218] In the sectional illustration in FIG. **4**, the pins **36** are hollow pins or sleeves **36**, the central axes of which on the fully mounted bicycle chain **10** are the pivot axis S. Furthermore, in FIG. **4** the pins **36** do not protrude, along the transverse chain axis BA, beyond the outer faces **38** of the wider longitudinal end regions **18** of the chain links **12**. As a result, the pins **36** are excluded from being a possible physical obstacle at the outer side of the bicycle chain **10**.

[0219] A further factor for the present bicycle chain **10** relating to the promotion of its shifting capability between two coaxial chain wheels lies in the configuration of offset regions, which, in the present exemplary embodiment, form the transition, for the one part, between the wider longitudinal end region **18** and the narrowing portion **22** and, for the other part, between the narrowing portion **22** and the narrower longitudinal end region **20** of a chain link **12**.

[0220] In the side view in FIG. **2**, in the chain plate outer surface **38**, a first offset region **52** of the chain link **12** can be seen between the wider longitudinal end region **18** and the narrowing portion **22** of the chain link **12**, which is also a first offset region **54** of the chain plate **24** between its wider longitudinal end region **28** and its narrowing portion **32**. Furthermore, a second offset region **56** of the chain link **12** can be seen between the narrowing portion **22** and the narrower longitudinal end portion **20** of the chain link **12**. This second offset region **56** is also a second offset region **58** of the chain plate **24** between its narrowing portion **32** and its narrower longitudinal end region **30**.

[0221] Since the offset regions **52** and **56** of the chain link **12** result from the offset regions **54** and **58** of the chain plates **24** and **26**, the offset regions will be described in more detail in the following text as offset regions **54** and **58** of the chain plate **24**. The illustrations of the chain plate **24** in FIGS. **5** to **7** are most suitable for this. In FIGS. **5** to **7**, a first longitudinal end, contributing to the formation of the wider longitudinal end **14** of the chain link **12**, of the chain plate **24** is indicated by the reference sign **15** and a second longitudinal end, contributing to the formation of the narrower longitudinal end **16** of the chain link **12**, of the chain plate **24** is identified by the reference sign **17**. It is only because of the stated allocation that the first longitudinal end **15** is also referred to as wider longitudinal end **15** in the following text and the second longitudinal end **17** is referred to as narrower longitudinal end **17**. The flattened height portion, contributing to the formation of the height portion **48** of the chain link **12**, of the chain plate **24** at the narrow longitudinal end **17** is provided with the reference sign **49**. In the flattened height portion **49**, the edge of the chain plate **24** is less curved than in adjacent edge portions, and may be uncurved or planar. At the height portion **49** in FIG. **7**. the course of the chain roller **34** and its radius rk are indicated by dashed lines.

[0222] For the sake of completeness, it should be noted that the edge of the chain plate **24** also has, at the wider longitudinal end **15**, a height portion with a flattened portion that is less curved, or uncurved, compared with adjacent edge portions.

[0223] In the chain plate outer surface **38**, the first offset region **54** represents a convex curvature of the chain plate outer surface **38** and the second offset region **58** represents a concave curvature thereof. In the chain plate inner surface **40**, the opposite is the case (see FIG. **6**). In that case, the first offset region **54** forms a concave curvature of the chain plate inner surface **40** and the second offset region **58** forms a convex curvature thereof. Therefore, the two offset regions **54** and **58**, following one another along the longitudinal chain path LB, result in an offset formation of the chain plate **24**.

[0224] The two offset regions **54** and **58** have, in the illustrated exemplary embodiment, a partially circular course about the longitudinal end region respectively adjoining the offset region (see FIGS. **5** and **7**). The wider longitudinal end region **28** has, in the chain plate outer surface **38**, a substantially planar annular surface **60**, which extends in a closed manner about the virtual pivot axis S passing through the wider longitudinal end region **28**. In FIG. **5**, the planar annular surface **60** is adjoined, towards the lower chain plate longitudinal edge **44**, by a bevel **60***a*, which extends as far as the lower chain plate longitudinal edge **44**. The bevel **60***a* extends out of a flattened height portion **49***a*, opposite to the flattened height portion **49**, at the wider longitudinal end **15** and extends along the convexly curved edge of the chain plate **24** until shortly before or as far as the turning point **44***a*, located closer to the wider longitudinal end **15**, of the lower chain plate longitudinal end **44**, where its curvature changes from convex to concave. The bevel **60***a* extends, in the illustrated exemplary embodiment, through more than a quarter, but less than a third, of a full revolution about the chain roller axis KR passing through the wider longitudinal end region **28**.

[0225] The bevel **60***a* may, in a section plane which contains the chain roller axis KR passing centrally through an opening **68** in the wider longitudinal end region **28**, have a straight or curved course. In the case of a curved course, this is convexly curved in plane view of the chain plate outer surface **38**.

[0226] The opening **68** is surrounded, in the chain plate outer surface **38**, by an encircling depression **68***a*. The depression **68***a* serves to receive material at the longitudinal end of a pin **36**. At its two longitudinal ends, the pin **36** may be widened radially, in a plastically deforming manner, into a respective depression **68***a* in the respective wider longitudinal end region **28** of the chain plates **24** of a chain link **12**. As a result, a pin can hold the two wider longitudinal end regions **28** of the chain plates **24** of a chain link **12** and the two narrower longitudinal end regions **30**, enclosed by these two wider longitudinal end regions **28**, of the two chain plates **24** of a chain link **12** immediately adjacent to the aforementioned chain link **12** in a form-fitting manner between one another. Furthermore, as a result of the receiving space, provided by the depression **68***a*, for material of the pin **36**, the pin **36** can be arranged flush with the outer surface of the wider longitudinal end region **18** of a chain link, this considerably improving the shifting behaviour of the bicycle chain **10**, since its outer surface does not having any protrusions that impede shifting, which could collide, during a shifting operation, with other components such as a chain guide, a chain wheel or a chain sprocket.

[0227] Likewise, the narrower longitudinal end region **30** has, in the chain plate outer surface **38**, a substantially planar annular surface **64**, which extends in a closed manner about the pivot axis S passing through the narrower longitudinal end region **30**.

[0228] At the planar annular surface **64** of the narrower longitudinal end **30** of the chain plate outer surface **38**, an

additional chamfer **64**A is connected in the region of the flattened height section **49**, as can be seen in FIG. **5**A. The chamfer **64**A may exhibit a straight or curved profile when viewed in a sectional plane defined by the longitudinal chain path LB and the chain roller axis KR. In the case of the curved profile, it is preferably convexly curved in the aforementioned cross-sectional view, i.e. curved outward. Alternatively, it can also be concavely curved. Such a configured chamfer **64**A promotes greater deflection capability of the bicycle chain in the direction of the transverse chain axis BA. This allows for a greater entanglement of the bicycle chain **10** during a first or a second shifting operation of the type described below, thereby improving the shifting behaviour.

[0229] In the chain plate inner surface **40**, the wider longitudinal end region **28** has a substantially planar annular surface **62**, which extends in a closed manner about the virtual pivot axis S passing through the wider longitudinal end region **28**. Likewise, the narrower longitudinal end region **30** has, in the chain plate inner surface **40**, a substantially planar annular surface **66**, which extends in a closed manner about the pivot axis S passing through the narrower longitudinal end region **30**.

[0230] As is illustrated in the side view, showing the inner side of the chain plate **24**, in FIG. **7**, in the first offset region **54**, the transition from the planar annular surface **62** to the adjacent narrowing portion **32** is formed by a stepped arrangement **54***a* with one or more steps. The stepped arrangement **54***a* graduates, in FIG. **7**, the inner surface of the chain plate **24** in the direction away from the viewer of FIG. **7**. In the same way, in the second offset region **58**, the transition from the planar annular surface **66** to the adjacent narrowing portion **32** is formed by a stepped arrangement **58***a* with one or more steps. The stepped arrangement **58***a* also graduates, in FIG. **7**, the inner surface of the chain plate **24** away from the viewer of FIG. **7**.

[0231] Since, as FIG. **5** shows, the transition from the annular surfaces **60** and **64** in each case to the adjacent narrowing portion **32** is formed without steps at the chain plate outer surface **38**, but with steps at the chain plate inner surface **40**, the chain plate **24** is formed, in the narrowing portion **32**, with a smaller material thickness than in the longitudinal end regions **28** and **30**, where the material thickness of the chain plate **24** is defined by the spacing of the mutually opposite annular surfaces **60** and **62** (in the wider longitudinal end region **28**) and, respectively, by the mutually opposite annular surfaces **64** and **66** (in the narrower longitudinal end region **30**). As a result of a reduced material thickness of the chain plate **24** in the region between the longitudinal end regions **28** and **30**, a tooth engagement space **46** formed with the involvement of the chain plate **24** is enlarged along the virtual transverse chain axis BA, this facilitating tooth engagement. In an embodiment, a narrowing portion **32** forms the majority of the section between two virtual chain roller axes KR of a chain plate **24**, such that, to facilitate tooth engagement, a inclined narrowing portion **32** is thinner than material regions, orthogonal to the virtual chain roller axes KR, of the chain plate **24**, which directly surround openings **68** and **69**.

[0232] As is apparent from the view in FIG. **6**, in which the viewer is looking at the upper chain plate longitudinal edge **42**, and in FIG. **7**, in which the viewer is looking at the chain plate inner surface **40**, the circular opening **68** that passes through the chain plate **24** in the wider longitudinal end **28** and receives a longitudinal end of a pin **36** when the bicycle chain **10** is fully mounted, is surrounded, on the inner side of the chain plate **24**, by a bead **70** encircling the circular opening **68**. The bead **70** projects, along the transverse chain axis BA, by less than half, or in another embodiment by less than a quarter, of the spacing, to be measured along the transverse chain axis BA, between the planar annular surfaces **60** and **62**.

[0233] A second embodiment of the chain plate **24** and thus of the bicycle chain **10** is also indicated schematically by way of dashed lines in FIG. **6**. The first offset region **54'** is located, in this second embodiment, closer to the chain roller axis KR passing through the narrower longitudinal end region **30** than to the chain roller axis KR passing through the wider longitudinal end region **28**. The position and design of the second offset region **58** is unchanged in this second embodiment compared with the above-described first embodiment illustrated by solid lines in FIG. **6**. The narrowing portion **22'** and **32'**, respectively, of the second embodiment is therefore shorter along the longitudinal chain path LB and the portion having the maximum inner chain link width is longer along the longitudinal chain path LB than the corresponding portions of the above-described first embodiment. Since the first offset region **54'** of the second embodiment is located at a distance from the encircling lateral surface of the chain roller accommodated in the wider longitudinal end region and the narrowing portion **22'** and **32'**, respectively, of the second embodiment scarcely supports an insertion movement of a chain wheel tooth into the tooth engagement space **46**, the first offset region **54'** can extend in a rectilinear manner, for instance parallel to the vertical chain axis HA. The first offset region **54'** can therefore be produced by bending or, again, by stamping.

[0234] Furthermore, a third embodiment of the chain plate **24** and thus of the bicycle chain **10** is indicated highly schematically by way of dashed lines in FIG. **6**. The position and design of the first offset region **54** is unchanged in this third embodiment compared with the above-described first embodiment illustrated by solid lines in FIG. **6**. The second offset region **58"** is located, in this third embodiment, closer to the chain roller axis KR passing through the wider longitudinal end region **28** than to the chain roller axis KR passing through the narrower longitudinal end region **30**. The narrowing portion **22"** and **32"**, respectively, of the third embodiment is therefore shorter along the longitudinal chain path LB and the portion having the maximum inner chain link width is longer along the longitudinal chain path LB than the corresponding portions of the above-described first embodiment. Since the second offset region **58"** of the third embodiment is located at a distance from the encircling lateral surface of the chain roller accommodated in the wider longitudinal end region **28** and the narrowing portion **22"** and **32"**, respectively, of the third embodiment scarcely supports an insertion movement of a chain wheel tooth into the tooth engagement space **46**, the second offset region **58"** can extend in a rectilinear manner, for instance parallel to the vertical chain axis HA. The second offset region **58"** can therefore be produced by bending or, again, by stamping.

[0235] In the case of the second and third embodiments, indicated merely with different dashed lines, either the wider longitudinal end region **28**, orthogonal to the chain roller axes KR, is embodied in a longer manner along the longitudinal chain path LB than the narrower longitudinal end region **30**, or vice versa. Therefore, in the case of the

indicated second embodiment, a portion, located between the narrowing portion **32'** and the opening **68**, of the chain plate is thinner than a chain plate region, immediately surrounding the opening **68**, with the planar surfaces **60** and **62**. Analogously thereto, in the case of the indicated third embodiment, a portion, located between the narrowing portion **32"** and the opening **69**, of the chain plate is thinner than a chain plate region, immediately surrounding the opening **69**, with the planar surfaces **64** and **66**. Again, the thinner formation of the chain plate region delimiting the tooth engagement space is intended to enlarge the volume available for tooth engagement in the tooth engagement space and thus facilitate tooth engagement.

[0236] On the inner side of the chain plate **24**, a collar **72** projects away from the chain plate **24** along the transverse chain axis BA. This collar **72**, which is formed coaxially with the circular opening **69** that passes all the way through the chain plate **24** in the narrower longitudinal end region **30** and surrounds said opening all around the latter, projects, in the fully mounted bicycle chain **10**, into the central recess in the chain roller **34**. The pin **36** that connects the two chain plates **24** and **26** that are opposite one another along the transverse chain axis BA passes through the collar **72**.

[0237] FIG. **5** shows an annular region **74** that surrounds the opening **69**, said annular region adjoining the planar annular surface **64** radially on the inside and forming, as, for instance, a quarter-torus surface, a transition between the substantially planar annular region **64** and a radially inner surface of the collar **72**.

[0238] The projecting length of the collar **72** from the planar annular surface **66**, surrounding it, along the transverse chain axis BA amounts to more than three times, or in another embodiment more than four times the projecting length of the bead **70** with regard to the planar annular surface **62** surrounding the bead **70**. In the fully mounted state, the bead **70** projects into the space, opened up by the curved region **74**, radially on the inside of the planar annular surface **64** and contributes to defining the pivot axis S of the chain plates, **24** on one side and **26** on the other side, that immediately follow one another along the longitudinal chain path LB.

[0239] The centre of the abovementioned partially circular course of the first offset region **54** and of the second offset region **58** is formed by the in each case closest pivot axes S, which are also the centre of the opening **68** and **69**, respectively, surrounding them. The partially circular first offset region **54** is in this case formed, especially in the chain plate inner surface **40**, in the present case also in the chain plate outer surface **38**, concentrically with the opening **68** which it surrounds radially on the outside along a portion. The partially circular second offset region **58** is formed, especially in the chain plate inner surface **40**, in the present case also in the chain plate outer surface **38**, concentrically with the opening **69** which is surrounds along a portion radially on the outside.

[0240] The partially circular formation of the offset regions **54** and **58** in the chain plate inner surface form, in the chain plate inner surface **40**, starting from the chain plate longitudinal edge **44** on the engagement side of the chain plate **24**, in the direction of the reference plane BE, an insertion aid for a tooth engagement space delimited by the chain plate **24**.

[0241] FIG. **6**A shows a further possible configuration of a chain plate of the abovementioned second embodiment with a first offset region **54'** offset closer to the narrower longitudinal end region **30**. The perspective of the chain plate **26** in FIG. **6**A corresponds to that in FIG. **6**. However, in FIG. **6**A, a chain plate **26** located opposite a chain plate **24** in the direction of the virtual transverse chain axis BA is illustrated. A chain plate **24** that matches the chain plate **26** in FIG. **6**A is formed mirror-symmetrically to the chain plate **26** in FIG. **6**A, specifically with regard to an axis of mirror symmetry which is oriented orthogonally to the virtual transverse chain axis BA and orthogonally to the drawing plane of FIG. **6**A. It is also readily apparent from FIG. **6**A that the thickness, to be measured along the virtual transverse chain axes BA and along the chain roller axes KR, respectively, of the chain plate **26**, is smaller in the region between the inclined narrowing region **32'** and the planar annular surfaces **60** and **62** surrounding the opening **68** than in the region, immediately surrounding the openings **68** and **69**, of the chain plate. As a result, a tooth engaging, between the chain roller axes KR, in a tooth engagement space **46** formed by the chain plate **26** in FIG. **6**A and its chain plate **24** formed in a mirror-inverted manner has a greater engagement volume available to it than without this thinner formation. This facilitates tooth engagement in the tooth engagement space **46**.

[0242] As is illustrated in FIG. **7**, the spacing CD that the first and the second offset region **54** and **58**, respectively, have from one another along the longitudinal chain path LB increases continuously from the reference plane BE to the longitudinal edge **44** on the engagement side of a chain link **12** or of the chain plates **24** and **26**. Thus, the spacing CD increases in viewing planes B1 and B2 that are parallel to the reference plane BE with increasing distance from the reference plane BE. This is the case, in the illustrated embodiment, on both sides of the reference plane BE. On account of the asymmetric configuration, with respect to the reference plane BE, of the chain plate **24**, only the course of the offset regions **54** and **58** on the side, facing the concave portion of the chain plate longitudinal edge **44**, of the reference plane BE is relevant as an insertion aid, however, since a chain wheel tooth is inserted into a tooth engagement space **46** delimited by the chain plate **24** and withdrawn therefrom again only from the side of the chain plate longitudinal edge **44**.

[0243] The second offset region **58** is formed, in the chain plate outer surface **38**, with a partially circular shape with the pivot axis S as its centre. In this example the planar annular surface **64**, surrounded by the curved second offset region **58**, at the narrower longitudinal end **30** of the chain plate **24**, on the fully mounted bicycle chain **10**, is arranged opposite the planar annular surface **62**, in the chain plate inner surface **38**, at the wider longitudinal end **28** of another chain plate **24**, and these two mutually opposite surfaces **64** and **62** are intended to be able to pivot about a pivot axis S that is then a common pivot axis. For this purpose, a coaxial planar annular surface about the pivot axis S that is then a common pivot axis is provided.

[0244] The longitudinal spacing CD between the first and the second offset region **54** and **58**, respectively, is at a minimum in the reference plane and corresponds there, in the illustrated exemplary embodiment, approximately to the radius rk of a chain roller **34**.

[0245] As is shown in FIG. **7**, the chain plate **24** has, in its chain plate inner surface **40**, starting from its partially concave chain plate longitudinal edge **44**, a bevel **76** with

which an entry opening, leading into the tooth engagement space **46** on the engagement side, of a chain link **12** is enlarged. The bevel **76** is formed in an inclined and/or curved manner in FIG. **7** such that its surface gets farther away from the viewer of FIG. **7** starting from its peripheral line **76***a*, located closer to the reference plane, in the direction of the chain plate longitudinal edge **44**. This also creates an insertion aid for a tooth entering the tooth engagement space **46** from the chain plate longitudinal edge **44**, but this time an insertion aid caused by a reduction in the clear inner chain link width iKW on approaching the reference plane BE. The curved offset regions **54** and **58** provide, in contrast, an insertion aid by reducing the clear width of the tooth engagement space **46** along the longitudinal chain path LB. Between the chain plates **24** and **26**, the tooth engagement space **46** is defined, along the longitudinal chain path LB, substantially by the lateral surfaces **35** of the chain rollers **34**. Since the curved offset regions **54** and **58** follow the course of the lateral surface **35** of the chain roller **34** that is located closest to them in each case, or extend flush therewith, the curvature of the lateral surfaces **35** of the chain rollers can be exploited as far as the chain plate longitudinal edge **44**. A rectilinear offset region that extends along the vertical chain axis H, as is obtained by simply bending a chain plate **24** or **26** about a bending axis parallel to the vertical chain axis HA, would reduce the clear inner chain link width iKW precisely in the entry region, close to the entry opening, that is important for a shifting operation.

[0246] For this purpose, the chain plate longitudinal edge **44**, in the narrower longitudinal end region **30** of the chain plate **24**, is also designed to follow the lateral surface **35** of the chain roller **34** immediately adjacent to the narrower longitudinal end region **30**, and is designed to be flush with the lateral surface **35**, such that the narrower longitudinal end region **20**, projecting into the wider longitudinal end region **18** of another chain link **12**, of a chain link **12** that is immediately adjacent along the longitudinal chain path LB also does not occupy, and thus reduce the size of, the entry region of the chain link **12** into the tooth engagement region **46** with its chain plates.

[0247] Formed on the chain plate inner surface **40** of the chain plate **24**, in the region of the annular surface **66**, are two bevels **66***a* and **66***b*, which extend from the annular surface **66** to the respective edge of the chain plate **24**.

[0248] The bevel **66***a* extends, at the lower chain plate longitudinal edge **44**, approximately from the turning point **44***b* which is closer to the narrower longitudinal end **17** and at which the lower chain plate longitudinal edge **44** changes its curvature between concave and convex into the flattened height portion **49**. The bevel **66***a* ends, in the illustrated embodiment, below the reference plane BE.

[0249] The bevel **66***b* extends from the flattened height portion **49**, starting above the reference plane BE, into the straight portion of the upper chain plate longitudinal edge **42**, where the bevel **66***b* continues as a bevel **76***b* into the region of the annular surface **62** and finally ends.

[0250] The bevels **66***a* and **66***b* may have a straight or a curved course in a section plane containing the chain roller axis KR that passes centrally through the opening **69**. In the case of a curved course, this course is convexly curved in plan view of the chain plate inner side **40**. Likewise, the bevel **76***b* may have a straight or a curved course in a section plane orthogonal to the longitudinal chain path LB. Again, in the case of a curved course, the bevel **76***b* is convexly curved on viewing the chain plate inner side **40**.

[0251] As a result of the described bevels **66***a* and **66***b*, the bicycle chain **10** as a whole obtains greater twistability about a torsion axis extending parallel to its longitudinal chain path LB. The bendability of the bicycle chain **10** about a bending axis extending parallel to its vertical chain axis HA can also be increased compared with a bicycle chain without such bevels, this enhancing shifting of the chain from one chain sprocket onto another, coaxial chain sprocket and thus improving the shifting capability of the chain.

[0252] Between the two bevels **66***a* and **66***b*, a portion of the planar annular surface **66** extends, in the region of the flattened height portion **49**, as far as the narrower longitudinal end **17** of the chain plate **24**, or of the chain link **12** formed by the chain plate **24**. Alternatively, this portion can also be bevelled in the flattened height portion **49**, such that a bevel, referred to herein as bevel **66***c*, extends all around the opening **69** from the bevel **76** to the bevel **76***b* in the narrowing portion **32**. This region that is bevelled all around is indicated additionally by dashed lines in FIG. **7**.

[0253] As a result of a continuous bevel **66***c*, the deflectability of the bicycle chain **10** from its course along the longitudinal chain path LB about a bending axis orthogonal to the longitudinal chain path LB and parallel to the virtual vertical chain axis HA is increased further, thereby further improving the shifting capability of the chain. The deflectability of the bicycle chain **10** about a bending axis parallel to the virtual vertical chain axis HA creates leeway for a rear derailleur to move the bicycle chain **10** circulating in an unchanged manner on a front chainring, in spite of its basically stiff and rigid chain links **12**, in the region of a rear sprocket assembly parallel to the transverse chain axis BA and thus to shift it between adjacent coaxial sprockets.

[0254] An additional chamfer **62***a* adjoins the planar surface **62** of the wider longitudinal end **28** of the chain plate inner surface **40** in the region of the flattened height section **49***a* as shown in FIG. **7**A. The chamfer **62***a* can have a straight or curbed profile in a sectional plane spanned by the longitudinal chain path LB and the chain roller axis KR. In the case of the curved profile, this is preferably convexly curved when viewed in the aforementioned sectional plane. Alternatively, it can also be concavely curved.

[0255] FIG. **7**B shows a fourth embodiment of a chain plate, corresponding, in a specific exemplary form, to a chain plate **26**, in a perspective view looking predominantly at its chain plate outer side. Components and component portions that are identical and functionally identical to the components and component portions, explained above, of the first to third embodiments of a chain plate are provided with the same reference signs in FIG. **7**B, but increased by the number **1000**. The chain plate **1026** in FIG. **7**B is explained in the following text only in as much as it differs from the above-described chain plates **24** and **26**, to the description of which reference is otherwise also made in order to explain FIG. **7**B. FIG. **7**D shows the chain plate **1026** from FIG. **7**B in a side view looking at the chain plate outer surface **1038**. With regard to the position of its offset regions, the chain plate **1026** is formed like the above-described second embodiment. This is only by way of example, however. It could, alternatively, be configured like the above first or third embodiment with regard to the position of its offset regions.

[0256] The chain plate **1026** of the fourth embodiment has, to save weight, a recess **1032***a*, which passes all the way through the chain plate **1026** in the thickness direction and which is surrounded all around by material of the chain plate **1026**.

[0257] Furthermore, FIG. **7**C shows an alternative embodiment of the chamfer **60***a* from FIG. **5** as chamfer **1060***a*. Here, the chamfer **1060***a* is extended along the outer contour of the wider longitudinal end **1028**. The chamfer **1060***a* surrounds the flat surface **1060** of the wider longitudinal end **1028** of the outer surface **1038** of the link plate. Similar to the chamfer **60***a* described with reference to FIG. **5**, the chamfer **1060***a* can have a straight or a curved profile in a sectional plane spanned by the longitudinal chain path LB and the chain roller axis KR. In the case of a curved profile, this is preferably convexly curved when viewed in the aforementioned sectional plane. Alternatively, it can also be concavely curved. Such a designed chamfer **1060***a* serves to reduce the wear of the derailleur guiding plate that occurs over time when the chain **10** enters the derailleur of the chainring assembly **82**.

[0258] As is shown in particular in FIG. **7**D, the recess has a roughly trapezoidal shape with rounded corners, wherein the longer of the two parallel trapezium sides is located closer to a longitudinal edge of the chain plate **1026**, in this case: closer to the rectilinear longitudinal edge **1042**, and extends parallel to the rectilinear longitudinal edge **1042**, and wherein the shorter trapezium side, parallel to the longer trapezium side, of the recess **1032***a* is located closer to the vertical centre, i.e. closer to the reference plane BE containing the chain roller axes KR, and extends parallel thereto.

[0259] The trapezoidal recess **1032***a* is formed mirror-symmetrically with respect to a plane of symmetry extending in the direction of the virtual vertical chain axis and parallel to the virtual transverse chain axis.

[0260] The oblique trapezium sides, extending between the longer and the shorter of the two parallel trapezium sides, at each longitudinal end of the trapezoidal recess **1032***a* are at the same distance from the opening **1068** and **1069**, respectively, located closest to them. The two parallel trapezium sides of the recess **1032***a* are longer than the inclined sides connecting them. The direction of inclination of the inclined sides corresponds roughly to the direction of curvature of the portion, located closest to an inclined side, of the boundary wall of an opening **1068** or **1069**, respectively, located closest to the inclined side.

[0261] In order not to excessively weaken the chain plate **1026** structurally with the recess **1032***a*, the recess **1032***a* is located entirely between the reference plane BE and the rectilinear longitudinal edge **1024**, wherein the distance of the recess **1032***a* from the rectilinear longitudinal edge **1042** is greater than from the reference plane BE.

[0262] The recess **1032***a* may have been formed, for example, by punching a corresponding surface region out of the chain plate **1026**. In the illustrated exemplary embodiment, the recess **1032***a* passes through both the offset regions **1054** and **1058**. This would also be the case if the chain plate **1026** were formed as per the first or the third embodiment with regard to the position of the offset regions **1054** and **1058**.

[0263] FIG. **7**E illustrates a fifth embodiment of a chain link plate **2026** according to the disclosure. In FIG. **7**E, components and component portions that are identical and functionally identical to the components and component portions, explained above, of the first to fourth embodiments of a chain plate are provided with the same reference signs, but in the number range 2000 to 2999. The chain plate **2026** in FIG. **7**E is explained in the following text only in as much as it differs from the above-described chain plates **24** and **26**, and **1026**, respectively, to the description of which reference is otherwise also made in order to explain FIG. **7**E. FIG. **7**E shows the chain plate **2026** in a perspective view looking predominantly at the chain plate inner side **2040**. With regard to the position of its offset regions, the chain plate **2026** is formed like the above-described second embodiment. This is only by way of example, however. It could, alternatively, be configured like the above first or third embodiment with regard to the position of its offset regions.

[0264] To reinforce the chain plate **2026**, in particular to reinforce it with respect to bending about a bending axis extending centrally between the openings **2068** and **2069** and orthogonal to the virtual transverse chain axis BA, parallel to the virtual vertical chain axis HA, the chain plate **2062** has a reinforcing rib **2042***a*. The reinforcing rib **2042***a* extends directly at the rectilinear edge **2042** of the chain plate **2026**. Although the reinforcing rib **2042***a* could extend at a distance from the rectilinear edge **2042**, it is formed directly at the edge **2042** in order to provide a tooth passing from the opposite edge **2044** into a tooth engagement space **2046** formed with involvement of the chain plate **2026** with sufficient receiving space.

[0265] The reinforcing rib **2042***a* is parallel to the longitudinal chain path LB in the illustrated exemplary embodiment. It is formed by forming a chain plate blank, but, alternatively, may also be formed by deposition of material.

[0266] The reinforcing rib **2042***a* extends along the virtual vertical chain axis HA over no more than 10% of the greatest dimensions of the chain plate **2026** along the virtual vertical chain axis HA. A surface, facing the annular surface **2066** along the virtual transverse chain axis BA towards the opposite chain plate **2024** (not illustrated), of the reinforcing rib **2042***a*, which, in spite of its small dimension along the virtual vertical chain axis HA, forms a part of the chain plate inner side **2040**, extends, without steps and jumps, flush with the annular surface **2066**, which surrounds the collar **2072** all around. The surface, facing along the virtual transverse chain axis, of the reinforcing rib **2042***a* and the annular surface **2066** form a common, planar surface orthogonal to the virtual transverse chain axis BA.

[0267] The reinforcing rib **2042***a* therefore extends from the narrower longitudinal end region **2030** to the wider longitudinal end region, wherein it ends early, however, such that a collision with a narrower longitudinal end region, located in the region of the opening **2068**, of a following chain plate along the longitudinal chain path and possibly with a chain roller located around the opening **2068** is reliably avoided. The chain plate **2026** may have a weight-saving recess **2032***a*, as was illustrated and explained in the previous fourth embodiment.

[0268] FIG. **7**F shows a further embodiment, according to the disclosure, of the bicycle chain. Identical components and component portions to those in the previous embodiments are provided with the same reference signs in the embodiment in FIG. **7**F, but in the number range 3000 to 3999. The embodiment in FIG. **7**F is explained in the following text only in as much as it differs from the above-described bicycle chain **10** and from the above-described chain plates **24** and **26**, and **1026** and **2026**,

respectively, to the description of which reference is otherwise also made in order to explain FIG. **7**F.

[0269] The chain plates **3024** and **3026** in FIG. **7**F correspond, with regard to the position of their offset regions **3054** and **3058**, to the above-described third embodiment, with a second offset region **3058"** located closer to the opening **3068** than to the opening **3069**. This is only by way of example, however. The chain plates **3024** and **3026** could also be formed as per the first or as per the second embodiment with regard to the position of their offset regions.

[0270] The bicycle chain **3010** in FIG. **7**F is illustrated not only in perspective, but also in a cross-sectional view in a section plane containing a chain roller axis KR and parallel to the virtual vertical chain axis HA.

[0271] As has already been set out above, the pins **3036** that connect the chain plates located opposite one another along the virtual transverse chain axis BA are in the form of hollow pins. It is readily apparent from the sectional view in FIG. **7**F how the pin **3036** was formed, at its two longitudinal ends, in order to form a form fit, into the removed annular space of the depression **3068***a* at the chain plate outer surface **3038** of the wider longitudinal end region **3028**. Thus, each longitudinal end of the hollow pin **3036** forms a rivet head, wherein the two rivet heads of a pin **3036** hold, by way of a form fit, the chain plates **3024** and **3026** arranged therebetween and the chain roller **3034** likewise arranged therebetween. An end face **3036***a* of the hollow pin **3036** is in this case substantially flush with the annular surface **3060** on the chain plate outer side **3038** of the wider longitudinal end regions **3028** of the mutually opposite chain plates **3024** and **3026**. At the least, the pin **3036** does not protrude axially beyond the annular surfaces **3060** of the wider longitudinal end regions **3028** that are connected by it.

[0272] In contrast to the embodiments discussed above, the chain plates **3024** and **3026** do not have, in their narrower longitudinal end regions **3030**, a protruding collar. Instead, a sleeve **3072***a* has been inserted into the mutually aligned surfaces **3069** of a chain link and connected, by way of a press fit, to the narrower longitudinal end regions **3030** of the chain links **3024** and **3026** forming the chain link.

[0273] A bead **3070** surrounding the openings **3068** on the chain plate inner side **3040**, which is shown similarly in FIG. **6**A and is provided there with the reference sign **70**, is not visible in FIG. **7**F, but can also be provided in this embodiment. The bead can be located opposite a negative-conical surface, formed in a substantially complementary manner, at the longitudinal ends of the sleeve **3072***a* and engage in the latter, which thus together form a kind of sliding guide for a pivoting movement of the wider longitudinal end portions **3028** of a chain link relative to the narrower longitudinal end portions **3030**, arranged between them, of the further chain link that is immediately adjacent along the longitudinal chain path LB, and centre the openings **3068** in the wider longitudinal end portions **3028** relative to the openings **3069** in the narrower longitudinal end portions **3030** arranged between them. Further, the wider longitudinal end portions **3028** and the narrower longitudinal end portions **3030** may include features for receiving a sleeve **3072***a* overhanging the outer surface **3038** of the narrower longitudinal end portion **3030**. As a result, a similar guiding and centering effect can be achieved as by the bead **3070**.

[0274] In an alternative embodiment, the sleeve **3072***a* can have a smaller inner diameter and/or outer diameter. By reducing the inner diameter of the sleeve **3072***a*, it is possible to accommodate a smaller pin (**3036**), thereby reducing the overall weight of the chain. Optionally, the sleeve **3072***a* can be designated as a riveted sleeve **3072***a*.

[0275] In the case of the embodiment in FIG. **7**F, the coaxially arranged components: sleeve **3072***a* and pin **3036** form a pivot joint which defines the pivot axis S for each roller **3034** of a chain link. The roller **3034** can rotate freely about the sleeve **3072***a*.

[0276] FIGS. **8**A to **8**I show possible variations of a chain **10** with regard to the link plates used for this purpose. In each of FIGS. **8**A to **8**I, a design with two successive chain links is shown schematically on the left side of the figure and a section of the respective chain is shown in a sectional view on the right side of the figure. The sectional plane is spanned by the longitudinal chain path LB and the respective chain width axis BA. The designations A, B1 and B2 of the chain plates refer, among other things, to the embodiments shown in FIG. **6**, some of which are shown only schematically in dashed lines. As shown, the chain **10** can be constructed from different combinations of link plates according to the various embodiments. Accordingly, the chain plates **26** of the left side of the chain **10** in the forward direction of rotation VD can have the same embodiment or a different embodiment from the chain plates **24** of the right side of the chain **10** in the forward direction of rotation VD.

[0277] The link plates with the designation A are shown with an elongated tapered section **32** in accordance with the configuration shown in FIG. **6**. The link plates with the designation B1 are shown with a shorter tapered section **32** in relation to the longitudinal chain path LB and shifted in the direction of the narrower longitudinal end region **30** in accordance with the configuration shown in FIG. **6**.

[0278] The link plates with the designation B2 are shown in accordance with the embodiment shown in FIG. **6** with a shorter tapered section **32** in relation to the longitudinal chain path LB and shifted towards the wider longitudinal end region **28**.

[0279] In the schematic top views shown on the left side of the respective representation or sectional views on the right side of the respective representation, the link plates of variants A, B1 and B2 have a wider longitudinal end region **28** and a narrower longitudinal end region **30**. A tapered section **32** of the link plates, which is inclined with respect to the longitudinal chain path LB, extends between the two longitudinal end regions and contributes to the formation of the tapered section **22** of the chain link. The wider longitudinal end section **28** is adjoined by a first offset section **54**. A second offset region **58** adjoins the narrower longitudinal end region **30**. With respect to the link plate outer surface **38**, the first offset region **54** represents a convex curvature and the second offset region **58** represents a concave curvature. The reverse is true with respect to the inner surface **40** of the link plate. There, the first offset region **54** represents a concave curvature and the second offset region **58** represents a convex curvature. The two offset areas **54** and **58** therefore lead to a successive offset formation of the link plates along the longitudinal chain path LB.

[0280] In variant A, the first offset region **54** is located closer to the wider longitudinal end **28** than to the narrower longitudinal end **30** and the second offset region **58** is located closer to the narrower longitudinal end **30** than to the wider longitudinal end **28**. In this variant, the two offset regions **54** and **58** are curved in opposite directions. The first offset region **54** is curved according to a circular path with

respect to the opening **68** and the second offset region **58** is curved is curved according to a circular path with respect to the opening **69**. This results in a more pronounced elongated tapered section **32** of the link plate with a smaller angular inclination to the forward direction of rotation VD, in relation to the overall length of the link plate in the direction of the longitudinal chain path LB.

[0281] In variant B1, the first offset region **54'** is closer to the narrower longitudinal end region **30** than to the wider longitudinal end region **28**. The position and design of the second offset region **58** is unchanged in variant B1 in relation to the previously described variant A. In this variant, the two offset regions **54'** and **58** are curved in the same direction. The two offset regions **54'** and **58** are each curved according to a concentric circular path relative to the opening **69**. The tapered section **32'** of the link plate of variant B1 is therefore shorter along the longitudinal chain path LB than the corresponding section of variant A described above, but with a greater angular inclination relative to the forward direction of rotation VD.

[0282] In variant B2, the second offset region **58"** is closer to the wider longitudinal end region **28** than to the narrower longitudinal end region **30**. The position and design of the first offset region **54** is unchanged in variant B2 compared to variant A described above. The two offset regions **54** and **58"** are curved in the same direction in this variant. The two offset regions **54** and **58"** are each curved according to a concentric circular path in relation to the opening **68**. The tapered section **32"** of the link plate of variant B2 is therefore shorter along the longitudinal chain path LB, but with a greater angular inclination relative to the forward direction of rotation VD. The section with the minimum inner chain link width is longer along the longitudinal chain path LB than the corresponding section of variant A described above.

[0283] Preferably, nine different embodiments of the chain **10** can be formed by any combination of the link plate variants A, B1 and B2. These embodiments are explained in more detail below. In order to avoid repetition, the chain link plate variants A, B1 and B2 will not be described again and reference will instead be made to the explanations above.

[0284] FIG. **8**A shows a first embodiment of the chain **10**. In this embodiment, the chain plates **24** and **26** are designed on both sides with respect to the forward direction of rotation VD of the chain in accordance with variant A. The chain has a symmetrical design with respect to the forward direction of rotation VD. This design results in a tapered section **22**A of the chain links, which corresponds to the tapered section **22** described in FIG. **6**.

[0285] FIG. **8**B shows a second embodiment of the chain **10**. In this embodiment, the chain plates **24** and **26** are designed on both sides with respect to the forward direction of rotation VD of the chain in accordance with variant B1. The chain has a symmetrical design with respect to the forward direction of rotation VD. This design results in a tapered section **22**B of the chain links, which corresponds to the tapered section **22'** described in FIG. **6**. In addition, this embodiment has the largest tooth engagement space of the chain links.

[0286] FIG. **8**C shows a third embodiment of the chain **10**. In this embodiment, the chain plates **24** and **26** are designed on both sides with respect to the forward direction of rotation VD of the chain in accordance with variant B2. The chain has a symmetrical design with respect to the forward direction of rotation VD. This design results in a tapered section **22**C of the chain links, which corresponds to the tapered section **22"** described in FIG. **6**. In addition, this embodiment has the smallest tooth engagement space of the chain links.

[0287] The following embodiments according to FIGS. **8**D to **8**I have an asymmetrical design with regard to the forward direction of rotation VD.

[0288] FIG. **8**D shows a fourth embodiment of the chain **10**. In this embodiment, the chain link plates **26** on the left side of the chain with respect to the forward direction of rotation VD are designed according to variant B1 and the chain link plates **24** on the right side with respect to the forward direction of rotation VD are designed according to variant A. This design results in a tapered section **22**D of the chain links, which corresponds to a combination of the tapered sections **22** and **22'** described in FIG. **6**.

[0289] FIG. **8**E shows a fifth embodiment of the chain **10**. In this embodiment, the chain link plates **26** on the left side of the chain with respect to the forward direction of rotation VD are designed according to variant A and the chain link plates **24** on the right side of the chain **10** with respect to the forward direction of rotation VD are designed according to variant B1. This design results in a tapered section **22**E of the chain links, which corresponds to a combination of the tapered sections **22** and **22'** described in FIG. **6**.

[0290] FIG. **8**F shows a possible sixth embodiment of the chain **10**. In this embodiment, the chain link plates **26** on the left-hand side of the chain with respect to the forward direction of rotation VD are designed in accordance with variant B2 and the chain link plates **24** on the right-hand side of the chain **10** with respect to the forward direction of rotation VD are designed in accordance with variant A. This design results in a tapered section **22**F of the chain links, which corresponds to a combination of the tapered sections **22** and **22"** described in FIG. **6**.

[0291] FIG. **8**G shows a seventh embodiment of the chain **10**. In this embodiment, the chain link plates **26** on the left side of the chain with respect to the forward direction of rotation VD are designed according to variant A and the chain link plates **24** on the right side of the chain **10** with respect to the forward direction of rotation VD are designed according to variant B2. This design results in a tapered section **22**G of the chain links, which corresponds to a combination of the tapered sections **22** and **22"** described in FIG. **6**.

[0292] FIG. **8**H shows a eighth embodiment of the chain **10**. In this embodiment, the chain link plates **26** on the left side of the chain with respect to the forward direction of rotation VD are designed according to variant B2 and the chain link plates **24** on the right side of the chain **10** with respect to the forward direction of rotation VD are designed according to variant B1. This design results in a tapered section **22**H of the chain links, which corresponds to a combination of the tapered sections **22"** and **22'** described in FIG. **6**.

[0293] FIG. **8**I shows a ninth embodiment of the chain **10**. In this embodiment, the chain link plates **26** on the left side of the chain with respect to the forward direction of rotation VD are designed according to variant B1 and the chain link plates **24** on the right side of the chain **10** with respect to the forward direction of rotation VD are designed according to variant B2. This design results in a tapered section **221** of the chain links, which corresponds to a combination of the tapered sections **22"** and **22'** described in FIG. **6**.

[0294] The advantages of using chain links in which the opposing chain plates are designed with different offset areas are particularly beneficial when the chains are used in shifting arrangements in which shifting operations are carried out both on rear sprocket assemblies with several rear sprockets (for example on sprocket cassettes) and on front sprocket assemblies with several chainrings using corresponding derailleurs. The chain plates with their corresponding offset areas can be specially adapted to the respective shifting directions.

[0295] FIG. **9** shows the rear bicycle sprocket assembly **86** as a shifting chain wheel assembly as seen along the assembly axis AO, extending orthogonally to the drawing plane of FIG. **9**, of the bicycle sprocket assembly **86**, corresponding to the arrow VIII in FIG. **10**. During operation, the bicycle sprocket assembly **86** rotates about the assembly axis AO. The bicycle sprocket assembly **86** is a 12 sprocket assembly, of which the pairing of the second largest sprocket R**11** with 28 teeth and of the largest sprocket R**12** with 32 teeth is used in the following text to explain the first and second shifting operations set out in the introductory part of the description.

[0296] The forward-travel direction of rotation of the bicycle sprocket assembly **86**, in which the bicycle sprocket assembly **86** rotates about the assembly axis when a bicycle bearing the bicycle sprocket assembly **86** is driven for forward travel by the bicycle chain **10**, is indicated by the arrow VD in FIGS. **9** to **13**.

[0297] For the sake of completeness, the construction of the bicycle sprocket assembly **86** is explained in conjunction with the side view in FIG. **10**, in which the assembly axis AO extends parallel to the drawing plane of FIG. **10**. The bicycle sprocket assembly **86** having 12 coaxial sprockets with respect to the assembly axis AO has, starting from the largest sprocket R**12** with 32 teeth, in the sequential direction FR, the further sprockets R**11** with 28 teeth, R**10** with 24 teeth, R**9** with 21 teeth, R**8** with 19 teeth, R**7** with 17 teeth, R**6** with 15 teeth, R**5** with 14 teeth, R**4** with 13 teeth, R**3** with 12 teeth, R**2** with 11 teeth and R**1** with 10 teeth.

[0298] In FIGS. **11** and **13**, only the two largest sprockets R**12** and R**11** are illustrated to demonstrate a first shifting operation from the smaller sprocket R**11** to the immediately adjacent larger sprocket R**12** and a second shifting operation from the larger sprocket R**12** to the immediately adjacent smaller sprocket R**11**, and to illustrate the structural design, chosen for this, of the sprockets R**11** and R**12**.

[0299] In FIGS. **11** and **13**, only the largest sprocket R**12** is illustrated in each case.

[0300] The following description of the sprockets R**11** and R**12** refers to all of FIGS. **9** to **14**, in which these sprockets are illustrated.

[0301] On the largest sprocket R**12**, first shifting lanes **101** for a first shifting operation, in which the chain **10** is shifted from the smaller sprocket R**11** as the starting chain wheel onto the larger sprocket R**12** as the target chain wheel, can be seen primarily through, planar, preparation recesses **103** on the side R**12***a*, facing the starting chain wheel R**11**, of the target chain wheel R**12**. Second shifting lanes **102** for a second shifting operation, in which the chain **10**, compared with the first shifting operation, is shifted in the opposite direction from the larger sprocket R**12** as the starting chain wheel onto the smaller chain wheel R**11** as the target chain wheel, can be seen primarily through, planar, deflector recesses **104** on the side R**12***a*, facing the target chain wheel R**11**, of the starting chain wheel R**11**. Since the difference in the number of teeth between the largest sprocket R**12** and the second largest sprocket R**11** amounts to four teeth (32 teeth minus 28 teeth), at most four shifting teeth **94** and **96** and thus at most four first shifting lanes **101** and four second shifting lanes **102** can be formed on the larger sprocket R**12**. As large a number of shifting lanes as possible increases the shifting comfort for the bicycle rider, since the latter, on actuating the chain shifter **91** at the bicycle sprocket assembly **86**, has at most to wait for the reaching of chain engagement of the starting chain wheel in the region of the next shifting lane. For this reason, the maximum number of first and/or second shifting lanes **101** and **102**, respectively, in each case is formed at each sprocket R**12** to R**2** on the bicycle sprocket assembly **86**. The maximum number of first and/or second shifting lanes corresponds to the difference in the numbers of teeth between a larger sprocket and the neighbouring smaller sprocket. Since the first and the second shifting lanes **101** and **102**, respectively, are always formed on the larger of two sprockets that are immediately adjacent in the sequential direction FR and there is not a smaller sprocket adjacent to the sprocket R**1**, no shifting lanes are formed on the sprocket R**1**.

[0302] The preparation recesses **103** are directly ahead, in the forward-travel direction of rotation VD, of a catching tooth **94** which, during a first shifting operation, engages as first tooth of the target chain wheel R**12** in a tooth engagement space **46** of a chain link **12** of the bicycle chain **10**.

[0303] The deflector recesses **104** of the second shifting lanes **102** are located directly at the circumferential position of a deflector tooth **96** which, during a second shifting operation from the sprocket R**12** as the starting chain wheel to the sprocket R**11** as the target chain wheel, no longer engages, as first tooth of the sprocket R**12**, in a tooth engagement space **46** of a chain link **12** of the bicycle chain **10**. The deflector recess **104** effectively offsets the deflector tooth **96** axially along the assembly axis AO away from the target chain wheel.

[0304] As can be seen in FIG. **9**, the catching teeth **94** and thus the first shifting lanes **101** are distributed equidistantly in the circumferential direction about the assembly axis AO, i.e. starting from a first catching tooth **94**, each further eighth tooth in the circumferential direction is another catching tooth. The spacing of the catching teeth **94** results from the total number of teeth of the sprocket R**12** divided by the number of first shifting lanes **101**, which preferably corresponds to the tooth number difference between the target sprocket R**12** and the start sprocket R**11**.

[0305] Likewise, the second shifting lanes **102** are arranged in a manner distributed equidistantly in the circumferential direction about the assembly axis AO. This again means that, starting from any desired chosen first deflector tooth **96**, every further eighth tooth in the circumferential direction is likewise a deflector tooth **96**. By contrast, the first shifting lanes **101** and the second shifting lanes **102** are not spaced apart equidistantly from one another.

[0306] The preparation recesses **103**, which allow the chain **10** to approach the sprocket R**12**, which is the target chain wheel in the first shifting operation, to a greater axial extent, i.e. along the assembly axis AO, during the first shifting operation, are formed on a preparation tooth **98**. The

preparation tooth **98** is directly ahead of the catching tooth **94**, which it supports, in the forward-travel direction of rotation VD.

[0307] A tooth that is directly ahead of the deflector tooth **96** in the forward-travel direction of rotation VD has, as supporting tooth **106** on its side that faces away from the sprocket R**11** as the target chain wheel of the second shifting operation and faces away from the viewer of FIG. **9**. Optionally, as can be seen in FIG. **12**A, the tooth **107** immediately preceding the support tooth **106** and the tooth **107** immediately preceding the support tooth in the forward direction of rotation VD can be tangentially (in the circumferential direction) shorter than a base tooth **109**. Additionally or alternatively, as shown in FIG. **14**A, chamfers **106***a* and **107***a* may be provided on the flanks leading in the forward direction of rotation VD on the side facing away from the sprocket R**11**, wherein the sprocket R**11** acts as the target sprocket of the second shifting operation. These features favour an axial approach of the chain **10** to the target sprocket R**11** of the second shifting operation when the chain is shifted from the sprocket R**12** to the sprocket R**11**, thus reducing the twisting of the bicycle chain **10** during the second shifting operation.

[0308] It is apparent from FIG. **11** how the chain **10**, indicated by its chain rollers **34** and the longitudinal chain path LB connecting the chain roller axes KR together, is shifted from the smaller sprocket R**11** as the starting chain wheel, in a first shifting operation, onto the larger sprocket R**12** as the target chain wheel by the derailleur (not illustrated in FIG. **11**. The preparation recess **103** in the region of the preparation tooth **98** allows the chain **10** to axially approach the sprocket R**12** further than only as far as the undisturbed outer surface R**12***a* of the sprocket R**12**. The chain link located in the region of the preparation recess **103** during the first shifting operation bears axially on the side of the preparation tooth **98**. The catching tooth **94** is the first tooth in the shifting lane **101** of the larger sprocket R**12** that engages in a tooth intermediate space of a chain link **12** of the chain **10**. All the teeth that follow the catching tooth **94** counter to the forward-travel direction of rotation VD then likewise engage in tooth intermediate spaces of chain links of the chain **10**. The catch tooth **94** and the tooth **95** immediately following the catch tooth **94** in the forward direction of rotation VD are tangentially shorter in comparison to the base tooth **99**, as shown in FIG. **12**A. This favours engagement in a tooth space of a chain link **12** of the chain **10**

[0309] In FIG. **13**, to the left of the centre of the illustrated circumference of the sprocket R**12**, the preparation recess **103** with its planar recess surface **103***a*, facing the smaller sprocket R**11**, is illustrated. It is apparent how the preparation tooth **98**, located entirely in the region of the preparation recess **103** in the illustrated exemplary embodiment, has a smaller axial width compared with a conventional standard tooth **50**. The recess surface **103***a* may be formed in a manner inclined with respect to the assembly axis AO or orthogonally to the latter. In the case of an inclination, the depth of the recess surface **103***a* increases in the circumferential direction towards the catching tooth, such that the inclination of the recess surface **103***a* corresponds qualitatively to the inclination of the bicycle chain **10** shifted from the smaller sprocket R**11** to the larger sprocket R**12**.

[0310] The edge **103***b* of the preparation recess **103** extends in the circumferential direction about the assembly axis AO depending on the circumferential location at a different radial distance from the assembly axis AO. The basic concept is that the edge **103***b* follows the course of the chain **10** during the first shifting operation, such that, during the first shifting operation, there is no collision, preventing shifting, between the sprocket R**12** and the chain **10**. In an embodiment, an edge **103***b* follows the contour of a chain plate longitudinal edge **44** on an engagement side of the chain plate, bearing on a preparation tooth **98** or arranged in a preparation recess **103**, of a chain **10**, such that the chain **10**, during the first shifting operation, can be supported physically on the edge **103***b* by the chain plate longitudinal edge **44**.

[0311] The edge **103***b* extends, starting from the tooth **99** that is directly ahead of the preparation tooth **98** in the forward-travel direction of rotation VD, initially steeply towards the assembly axis AO, then reaches, in the circumferential region of the tooth intermediate space between the preparation tooth **98** and the tooth **99** directly ahead, a location closest to the assembly axis AO, as long as material of the sprocket R**12** is present in this region on account of the lightweight construction, and rises, from this closest location, on continuing to travel counter to the forward-travel direction of rotation, into the circumferential region of the tooth intermediate space between the catching tooth **94** and the preparation tooth **98** towards the radial boundary surface of this tooth intermediate space.

[0312] In a further embodiment, as can be seen in FIG. **12**A, the preparation recess **103** can alternatively extend over the preparation tooth **98** and the tooth **99** immediately preceding the preparation tooth **98** in the forward direction of rotation VD, i.e. over two teeth. The preparation recess **103** then ends in the inter-tooth space between the tooth **00** and the tooth immediately preceding the tooth **99** in the forward direction of rotation VD. This embodiment of the preparation recess **103** promotes a closer axial approach, i.e. along the assembly axis AO, of the chain **10** to the pinion R**12** in a first shifting operation, which is the target sprocket in the first shifting operation.

[0313] In FIG. **14** and also in FIG. **13**, a catching recess **108** is formed on the side R**12***b*, facing away from the target chain wheel R**11**, of the sprocket R**12** in the region of the radially outer half of the catching tooth **94**. The catching tooth **94** has, on its side R**12***b* facing away from the sprocket R**11**, a catching bevel **94***b*, which extends radially inwards from its meshing line **94***a* and which extends both in the radial direction and in the axial direction. The catching bevel **94***b* delimits, as an outer surface portion of the catching tooth **94**, a region, located radially further out, of the catching recess **108**. The catching bevel **94***b* is adjoined, radially on the inside, i.e. on the side facing the assembly axis AO, by a second outer surface portion **94***c*, which, compared with the catching bevel **94***b*, extends much more in the radial direction and much less in the axial direction than the catching bevel **94***b*. The second outer surface portion **94***c* also delimits a region of the catching recess **108**.

[0314] FIG. **14** shows how, compared with a standard tooth **50**, a considerable displacement of the meshing line **94***a* of the catching tooth **94** towards the starting chain wheel R**11** of a first shifting operation is brought about by the catching tooth **94***b* and the second outer surface portion **94***c*. This makes it easier for the catching tooth **94** to be inserted into a tooth engagement space **46** of a chain link **12** of the chain **10** during the first shifting operation.

[0315] FIG. **13** also shows how a tooth **95**, directly trailing the catching tooth **94** with respect to the forward-travel direction of rotation VD, can have, on the side R**12***b* facing away from the starting chain wheel R**11**, an auxiliary recess **110** which helps to reduce cross-chaining of the chain **10** during a first shifting operation. A slightly less inclined position of the chain **10** then suffices, in order that the catching tooth **94** can engage in the tooth engagement space **46** of a chain link **12** of the chain **10**, than if the tooth **95** directly trailing the catching tooth **94** were in the form of a standard tooth **50** without an auxiliary recess **110**. For reasons of greater clarity, in FIG. **12**, the auxiliary recess **110** is illustrated at a different first shifting lane than the catching recess **108**. The auxiliary recess **110** may also be delimited in a radially outer region by a bevel **95***b* as a first outer surface region of the tooth **95** and in a radially inner region by a second outer surface region **95***c* that extends more radially and less axially than the bevel **95***b*, wherein the auxiliary recess **110** projects axially less deeply into the tooth **95** than the catching recess **108** projects into the catching tooth **94**. The auxiliary recess **110** extends in the circumferential direction over the entire tooth bearing it, as does the catching recess **108**. While the catching recess **108** on the catching tooth **94** can be formed slightly closer to the assembly axis AO on the circumferential side leading in the forward-travel direction of rotation VD than on the circumferential side trailing with respect to the forward-travel direction of rotation VD, this is the reverse for the auxiliary recess **110** on the tooth **95** directly trailing the catching tooth **94**.

[0316] The catching tooth **94** extends radially less far away from the assembly axis AO than the other teeth of the sprocket R**12**.

[0317] FIG. **11** shows, away from the chain course of the first shifting operation, counter to the forward-travel direction of rotation VD, a course of the chain **10** during a second shifting operation, in which the chain **10** is shifted from the larger sprocket R**12** as the starting chain wheel to the smaller sprocket R**11** as the target chain wheel. As a result of the deflector recess **104**, the chain link **12** located in the circumferential region of the deflector tooth **96** can axially pass the deflector tooth **96** on the side R**12***a* facing the sprocket R**11** when the chain **10** is shifted onto the sprocket R**11**. All the teeth, ahead of the deflector tooth **96** in the forward-travel direction of rotation VD during the second shifting operation, of an engagement section are engaged with the tooth engagement spaces **46** of the chain links **12** of the chain **10**.

[0318] As a result of its shape, the deflector recess **104** supports the radial approaching of the smaller sprocket R**11** by the chain **10**. The recess surface **104***a* facing the smaller sprocket R**11** is planar and may, qualitatively following the axial course of the chain **10** during the second shifting operation, be arranged in the circumferential direction so as to be inclined about a radius line as inclination axis such that the recess surface **104***a* approaches the sprocket R**11**, as the target chain wheel of the second shifting operation, in the opposite direction to the forward-travel direction of rotation VD.

[0319] FIG. **14** shows how the deflector recess **104** brings about an increased axial distance of the deflector tooth **96** from the sprocket R**11** compared with teeth without a recess. A bevel **96***b*, formed on the side R**12***a* facing the target chain wheel R**11** of the second shifting operation, on the tooth tip of the deflector tooth **96** brings about an even greater displacement of the meshing line **96***a* of the deflector tooth **96** away from the target chain wheel R**11**, this further supporting an axial movement of the chain **10** past the deflector tooth **96** during a second shifting operation.

[0320] For the edge **104***b* of the deflector recess **104**, what was stated above for the edge **103***b* of the preparation recess **103** applies qualitatively in a corresponding manner: the edge **104***b* qualitatively follows the course of the chain **10** during the second shifting operation in the second shifting lanes **102** and is designed to follow the contour of the chain plate longitudinal edge **44** on the engagement side of the chain plate bearing on the deflector tooth **96** and arranged in the deflector recess **104**, such that the chain plate can be physically supported, with its chain plate longitudinal edge **44** on the engagement side, on the edge **104***b* of the deflector recess **104**. The edge **104***b* of the deflector recess **104** begins, in the illustrated exemplary

[0321] embodiment, in the circumferential region of the point, located closest to the assembly axis AO, of the tooth intermediate space directly ahead of the deflector tooth **96** in the forward-travel direction of rotation VD, and extends from there in the circumferential direction, counter to the forward-travel direction of rotation VD, radially approaching the assembly axis AO. In the circumferential region of the point, located closest to the assembly axis AO, of the tooth intermediate space that directly trails the deflector tooth **96** with respect to the forward-travel direction of rotation VD, the deflector recess **104** comes closest to the assembly axis AO and then rises, on travelling further counter to the forward-travel direction of rotation VD, radially steeply in the region of the closest flank of the tooth directly following counter to the forward-travel direction of rotation VD, as far as the outer surface of the sprocket R**12**.

[0322] It is apparent from FIG. **13** that, on the side R**12***b*, facing away from the sprocket R**11** as the target chain wheel of the second shifting operation, of the supporting tooth **106** that is directly ahead of the deflector tooth **96** in the forward-travel direction of rotation VD, a supporting recess **112** is formed, which reduces the axial thickness of the supporting tooth **106** and thus allows the chain **10** guided on the sprocket R**12** to approach the sprocket R**11** as the target chain wheel of the second shifting operation. The supporting recess **112** reduces the cross-chaining of the chain **10** during the second shifting operation, since the inclined position of the chain **10** can be realized over a greater circumferential area than would be the case without the supporting recess **112**. The supporting recess **112** has, for the second shifting operation, substantially the same effect as the auxiliary recess **110** has for the first shifting operation.

[0323] FIG. **12**B shows a further embodiment in which the deflector tooth **96** and/or the catch tooth **94** are completely removed to assist the chain **10** in approaching the respective target sprocket R**11** or R**12**. This measure creates gaps at the positions of the shift lanes, which, when the chain **10** is shifted from the sprocket R**12** and R**11** to the sprocket R**11** or R**12**, enable the chain **10** to move axially closer to the target sprocket, thus reducing the twisting of the bicycle chain **10**.

[0324] The above statements regarding the two largest sprockets R**11** and R**12** apply accordingly to the other pairs of axially directly adjacent, differently sized sprockets. As the difference in the number of teeth between the larger and smaller sprockets in a shifting operation pair decreases, the

maximum number of possible shifting lanes decreases. In addition, the size of described recesses on the functional teeth of the first and second shifting lanes on smaller sprockets can be smaller than explained here on sprocket R**12**.

[0325] FIG. **12** and FIG. **14** show a sprocket of a bicycle sprocket assembly **86**. The sprocket has at least one tooth, as described here using the example of tooth **98**, whose tooth tip is chamfered such that the radially outer surface of the tooth tip **98***b* slopes downward in the direction of the next larger sprocket. The at least one tooth **98** designed in this way prevents unintentional disengagement of the chain **10** onto the adjacent smaller sprocket when the sprocket is rotated against the drive direction.

[0326] FIG. **12**A shows a sprocket of the bicycle sprocket assembly **86**. The sprocket has at least one tooth, as described here using the example of tooth **93**, whose tooth tip is chamfered such that the radially outer surface of the tooth tip **931** slopes towards the next smaller sprocket. The at least one tooth **93** thus configured prevents the chain **10** from inadvertently ascending from the adjacent smaller sprocket onto the corresponding sprocket when the sprocket is rotated counter to the drive direction.

[0327] According to a further embodiment, the chamfer of the tooth tip **931** can also be designed as a two-part chamfer **931**. In this case, a first part **931***a* of the chamfer **931** extends in the region of the leading flank in the forward direction of rotation VD, which in this case corresponds to the non-load flank of the tooth **93**. A second part of chamfer, adjoining the first part, extends in the region of the trailing flank in the forward direction of rotation VD, which in this case corresponds to the load flank of tooth **93**. In the first part, the chamfer **931***a* extends over a radially larger area of the tooth **93** than in the second part of the chamfer **931***b*. This allows the chain **10** to be brought into contact with the chamfer **931** at an early stage and thereby slide into desired position without having to remove too much material from the load flank. This further ensures a high mechanical strength of the load flank.

[0328] FIG. **9**A shows a section of a bicycle sprocket assembly **86**. The present sprockets each have only one tooth difference in their number of teeth. As can be seen, the center axis **96***c* of the deflector tooth **96** on the next smaller sprocket is arranged between the non-load flank **109***a* of the tooth **109** immediately following the deflector tooth **96** of the next larger sprocket in the forward direction of rotation VD of the cassette on the one hand and the load flank **106***b* of the support tooth **106** of the next larger sprocket on the other hand. This enables the chain **10** to be changed from a larger sprocket of the bicycle sprocket assembly **86** to a smaller sprocket of the bicycle sprocket assembly **86**.

[0329] FIG. **9**B shows a section of a bicycle sprocket assembly **86**. The present sprockets each have only one tooth or two teeth difference in their number of teeth. The following describes the configuration to enable a change of the chain **10** from a smaller sprocket of the bicycle sprocket assembly **86** to a larger sprocket of the bicycle sprocket assembly **86**. As can be seen, the central axis **98***a* of the preparatory tooth **98** on the smaller sprocket is arranged between the non-load flank **94***e* of the catch tooth **94** of the next larger sprocket, on the one hand, and the load flank **99***a* of the tooth **99** of the next larger sprocket immediately preceding the preparatory tooth in the forward direction of rotation, on the other hand.

[0330] The embodiments described in FIGS. **9**A and **9**B promote an axial approach of the chain **10** to the target sprocket when shifting the chain **10**, thus reducing entanglement of the bicycle chain **10**. Furthermore, as already explained, if there is a difference of only one tooth between two adjacent sprockets, it is possible to use only one shifting lane, preferably with a catch tooth or preferably with a deflector tooth, since, in contrast to conventional chains with inner and outer plate links, the tooth engagement spaces of the half-link chain are always the same, regardless of the embodiment (see FIGS. **8**A to **81**). As a result, if there is an odd difference in the number of teeth between two adjacent sprockets, in particular if there is a difference of only one tooth, there is no need to design several of the shifting lanes preferred according to the disclosure with only one catch tooth or with only one deflector tooth.

[0331] FIG. **15** illustrates in a schematic manner, for further illustration, an operating situation of the drive assembly **80** during a first shifting operation. There, the bicycle drive assembly **80** is illustrated in a schematic manner, as was described above in conjunction with FIG. **20** and with further figures. Of the bicycle sprocket assembly **86**, for greater clarity, only the second largest chain sprocket R**11** and the largest chain sprocket R**12** are shown, which rotate about the common assembly axis AO. The assembly axis AQ of the chainring assembly **82** is not illustrated in FIG. **14**. It extends, as customary, parallel to the assembly axis AO of the bicycle sprocket assembly **86**. The chain wheel tooth **50** already indicated in FIG. **4** is intended to be a standard tooth **50** of the smaller chain sprocket R**11**. The spacing of the chain wheel assemblies **82** and **86** from one another is illustrated in a greatly reduced manner in FIG. **15**.

[0332] The circulating bicycle chain **10**, illustrated in accordance with the sectional illustration in FIG. **4**, is shifted, in FIG. **15**, by the derailleur **92** from the plane, orthogonal both to the drawing plane of FIG. **15** and to the assembly axis AO, of the smaller chain sprocket R**1** as the starting chain sprocket R**11**, with which the bicycle chain **10** is initially engaged, to the plane, orthogonal both to the drawing plane of FIG. **15** and to the assembly axis AO, of the larger chain sprocket R**12** as the target chain sprocket R**12**, with which the bicycle chain **10** is intended to be engaged after the shifting operation. For the description of the bicycle chain **10** in FIG. **15**, reference is made to the description of FIG. **4** and of FIGS. **1** to **3** that are associated therewith.

[0333] According to the above description, the target chain wheel R**12** has, in the currently active first shifting lane **101** of the target chain sprocket R**12**, exactly one catching tooth **94**. A schematic cross section of the catching tooth **94** in a section plane orthogonal to a radius line through the catching tooth **94** is illustrated in an enlarged manner in the magnification shown in FIG. **15**. The catching tooth **94** is designed, as the first chain wheel tooth of the target chain sprocket R**12**, to engage the bicycle chain **10** shifted to the target chain sprocket R**12**. The formation of the catching tooth **94** as a catching tooth is based, inter alia, on a sliding bevel **94***d* (see also FIG. **13**) which is intended to facilitate entry into a tooth engagement space **46**. In the portion depicted in FIG. **15**, the sliding bevel **94***d* is formed between the second outer surface portion **94***c* facing away from the starting chain sprocket R**11** and the unloaded flank **94***e* leading in the forward-travel direction of rotation VD. The flank **94***f* which is opposite the flank **94***e* in the circum-

ferential direction, which is a load-bearing flank in the present case and which trails in the forward-travel direction of rotation VD is formed in a wider manner, to achieve a greater load-bearing capacity, than the leading unloaded flank **94***e*.

[0334] The surface **94***d*-**1** of the sliding bevel **94***d* is inclined in such a way that its normal vector NV has three non-zero Cartesian vector components, of which the axial vector component NVa is directed away from the starting chain sprocket R**11**, the radial vector component NVr is directed away from the common assembly axis AO of the bicycle sprocket assembly **86**, and the vector component NVu extending in the circumferential direction is directed away from the trailing load-bearing flank **94***f*. The surface **94***d*-**1** of the sliding bevel **94***d* extends over a certain radial height of the catching tooth **94** radially outwardly as far as the tooth tip or as far as the catching bevel **94***b* and radially inwardly at least as far as the central circumferential third of the tooth intermediate space directly trailing the catching tooth (see FIG. **13**).

[0335] As can be seen from the engagement situation, illustrated in FIG. **15**, of the catching tooth **94**, the sliding bevel **94***d* allows an inclined position, supporting the first shifting operation, of the bicycle chain **10**, such that the latter can run from the sprocket R**11** to the sprocket R**12** and can run onto the sprocket R**12** along the first shifting lane **101**. The chain plate **26** that is axially directly opposite the sliding bevel **94***d* can, during the first shifting operation, bear on the sliding bevel **94***d*, in order to establish a form-fitting engagement of the catching tooth **94** with the tooth engagement space **46**, and slide along said sliding bevel radially in the direction of the assembly axis AO. Such sliding contact engagement does not have to exist, however.

[0336] As FIG. **13** shows, the tooth **95** that is immediately adjacent to the catching tooth **94** counter to the forward-travel direction of rotation VD can have, on its side facing away from the starting sprocket R**11**, on its leading flank in the forward-travel direction of rotation VD, a further sliding bevel **95***d* which is designed substantially like the sliding bevel **94***d*. What was stated above in relation to the design of the sliding bevel **94***d* also applies, mutatis mutandis, to the further sliding bevel **95***d* of the tooth **95**.

[0337] In the embodiment in FIG. **15**, the chain links **12** are arranged in the bicycle chain **10** in such a way that, during a circulating movement of the bicycle chain **10** circulating in a closed manner for forward travel, i.e., in FIG. **15**, a movement of the bicycle chain **10** from the left-hand edge to the right-hand edge of FIG. **15**, the narrower longitudinal end **20** of each chain link **12** leads and the wider longitudinal end **18** trails.

[0338] FIG. **16** shows a side view of a front chainring **84** of an alternative embodiment of a front chainring assembly **82**. In this case, the chainring **84** is the only chainring of the front chainring assembly **82** and is therefore not designed for a shifting operation. A plurality of the teeth **132** of the chainring **84** have the same geometry, which are adapted to the geometries of the chain plates, in particular the chain plates of the three embodiments described in FIG. **6**. The 2D profile of the teeth **132** can correspond to the 2D profile of the already existing wide X-SYNC teeth. The teeth **132** have a chamfer **134***b* on the lead edges, which in this case correspond to the load flanks **134**, on one side or both sides. Furthermore, the load flanks of a tooth **132** have a distance **134***a* and the trailing edges **136** have a distance **136***a* from the main tooth body **131**. The resulting lateral flanks **133**, which are offset from the main tooth body, counteract wear of the chain **10** during operation and thus enable a longer service life of the chainring **84**.

[0339] FIG. **16**A shows a top view of a tooth **132** of the front chainring **84**. In this case, the tooth geometry is adapted to a chain **10** with chain plates of variant B-the second or third embodiment described in FIG. **6**. In a further embodiment, the teeth **132** can be adapted to any chain plate geometry, in particular according to the geometries of the first, second and third embodiments described in FIG. **6**. Reference is again made to the various combinations of link plates that result in chain designs as shown in FIGS. **8**A to **8**I and explained in the associated description above. Essentially, the adaptation of the tooth geometry of a tooth **132** is based on the angle **138** of the single-sided or double-sided chamfer **134***b* on the load flank **134** of a tooth **132**, which is essentially adapted to the chain link geometry. By adapting the teeth **132** to the geometry of the chain links of the chain **10** to be caught, the catching and guiding of the chain **10** by the chainring **84** is facilitated.

[0340] In a further embodiment shown in FIG. **17**, the front chainring assembly **82** can have a large chainring **83** and a small chainring **85** and be limited to the use of these two chainrings **83** and **85**. Accordingly, in this embodiment, the front chainring assembly **82** is designed for a first shifting operation from the small chainring **85** to the large chainring **83** and a second shifting operation from the large chainring **83** to the small chainring **85**. The geometry of the teeth of the front chainring assembly **82** is adapted for use with a half-link chain. The large chainring has a rivet **142** for a first shifting operation from the small chainring **85** to the large chainring **83** to facilitate a corresponding shift of the chain **10**. On the inner side **83***a* of the large chainring **83**, a recess **142***a* leading ahead the rivet **142** in the forward direction of rotation is formed by material removal or embossing. The recess **142***a* creates a clearance that allows the chain **10** to run unhindered onto the rivet **142** during a first shifting operation, thus assisting in initiating the first shifting operation. The first tooth **140**, which follows the rivet **142**, has a recess **140***b* on its inner side and a chamfer **140***a* on its trailing flank in the forward direction of rotation to promote an axial approach of the chain **10** to the large chainring **83** with respect to the common assembly axis AQ during a first shifting operation.

[0341] The large chainring **83** further includes at least one tooth **154** having a shorter radial length than a standard tooth of the chainring **83**. In particular, the tooth tip is chamfered such that the upper surface of the tooth tip **154***a* slopes towards the inner side **83***a* of the chainring **83**. The at least one tooth **154** designed in this way supports the chain **10** in initiating a second shifting operation at a preferred position with respect to the target chainring **85**.

[0342] FIG. **17**A shows the outer side **83***b* of the large chainring **83**. The large chainring **83** has at least one tooth **158** that has a shorter radial length than a standard tooth of the chainring **83**. In particular, the tooth tip is chamfered such that the upper surface of the tooth tip **158***a* slopes towards the outer side **83***b* of the chainring **83**. The at least one tooth **158** thus configured prevents the chain **10** from initiating a second shifting operation at a position that does not correspond to a preferred position with respect to the target chainring **85**.

[0343] In addition, the second tooth **144** after the rivet **142** has a shorter radial length than the standard teeth. An additional chamfer **144***a* extends from the load flank **144***b* along the outer side **83***b* to the trailing edge **144***c* of the second tooth **144**. The chamfer **144***a* in combination with the shorter radial length and the recess **140***b* promotes the catching a chain link during a first shifting operation.

[0344] The teeth of the large chainring **83** have further design features to facilitate a second shifting operation from the large chainring **83** to the small chainring **85**. These features are explained in more detail with reference to FIGS. **17** and **17**A. To enable a chain **10** to shift gears in the same way as the second shifting operation, the teeth-shown here using tooth **156** as an example—on the large chainring **83** have a chamfer **156***b* on the trailing edge of the outer side **83***b* of the teeth **156** in the forward direction of rotation. Furthermore, the teeth **156** have a chamfer **156***a* on the inner side **83***a* of the load flanks of the teeth **156**. The two chamfers enable the chain **10** to slide on the teeth **156** in the direction of the target chainring **85** when a second shifting operation is initiated. This promotes an axial approach of the chain **10** to the small chainring **85** with respect to the common assembly axis AQ.

[0345] FIG. **17** shows a section of the inner side of the chainring assembly **82**, FIG. **17**A is a section of the outer side **83***b* of the large chainring **83** and FIG. **17**C is a section of the outer side **85***b* of the small chainring **85**. On the teeth of the large sprocket **83** and/or the small sprocket **85**—as illustrated here using the example of teeth **146** and **148**—a chamfer is machined on the load flanks **146***a* and **148***a* on the inner side **146***b*, **148***b* and/or a chamfer is machined on the outer side **146***c*, **148***c*.

[0346] FIG. **17**B shows a pin **150** on the outer side **83***b* of the large chainring **83**, which is intended to prevent the chain **10** from jumping over the large chainring **83** during a first shifting operation. At least one such pin **150** is arranged on the outer side **83***b* in such a way that it prevents the chain **10** from jamming between the large chainring **83** and a crank arm of the crank assembly **122**. For this purpose, the pin **150** must be arranged on the large chainring **83** radially as far away as possible from the assembly axis AQ.

[0347] FIG. **18** shows an inner side **83***a* of a tooth **160** of the large chainring **83** of the chainring assembly **82** of FIG. **17**, which is designed to control the timing of a second shifting operation of the chain **10**. For this purpose, the load flank **162** of the tooth **160** has a distance **162***a* and the trailing edge **164** of the tooth **160** has a distance **164***a* from the tooth main body **161**.

[0348] The chain wheel shifter **91** further comprises at least one, preferably two, deflection pulleys **170** of a rear derailleur, which can be actuated mechanically or electromechanically. The deflection pulley **170** is shown in sectional view in FIG. **19**. The geometry of all teeth **172** of the deflection pulley **170** is identical and adapted to the geometry of the chain plates, in particular the chain plates of variants A, B1 and B2, as well as to their combinations, as shown in FIGS. **8**A to **8**I.

[0349] FIG. **19**A shows, by way of example, a tooth **172** of the deflection pulley **170** of FIG. **19**, which is adapted to the chain plate of variant A for a chain in the embodiment according to FIG. **8**A. The tooth has cutouts **174***a* on the leading flanks **174** in the forward direction of rotation VD and/or cutouts **176***a* on the trailing flanks **176** with respect to the forward direction of rotation VD. The cutouts counteract the wear of the chain **10** during operation and thus enable a longer service life of the deflection pulley **172**.

[0350] Example systems, apparatus, and articles of manufacture for bicycles (and/or other vehicles) are disclosed herein. Examples and combinations of examples disclosed herein include the following:

[0351] Example 1 is a bicycle chain (**10**) comprises a plurality of chain links (**12**) following one another along a virtual longitudinal chain path (LB). The chain links (**12**) following one another directly along the longitudinal chain path (LB) can be pivoted relative to one another about virtual pivot axes(S) parallel to one another. The pivot axes(S) extend along a virtual chain width axis (BA) oriented transversely to the longitudinal chain path (LB). The two pivot axes(S) of a chain link (**12**) located at a distance from one another along the longitudinal chain path (LB) define a virtual reference plane (BE) for the chain link (**12**) containing the pivot axes(S) and the longitudinal chain path (LB). Each chain link (**12**) has two separately formed flat chain plates (**24**, **26**) lying opposite one another along the chain width axis (BA). The chain plates (**24**, **26**) have their largest dimensions along the longitudinal chain path (LB) and along a chain height axis (HA) running both transversely to the longitudinal chain path (LB) and transversely to the chain width axis (BA). The chain plates (**24**, **26**) are formed and arranged in an offset manner along the longitudinal chain path (LB) in such a way that each chain link (**12**) has, in the reference plane (BE), a longitudinal end (**14**) which is wider along the chain width axis (BA) and has a greater link width (aKW) and a narrower longitudinal end (**16**) which is opposite the wider longitudinal end (**14**) along the longitudinal chain path (LB) and has a smaller link width (aKW). A chain roller (**34**) is accommodated between the chain plates (**24**, **26**) in a narrower longitudinal end region (**20**) located closer to the narrower longitudinal end (**16**) than to the wider longitudinal end (**14**). The following applies to chain links (**12**) following one another along the longitudinal chain path (LB) that in each case a narrower longitudinal end region (**20**) of a chain link (**12**) projects into a wider longitudinal end region (**18**), located closer to the wider longitudinal end (**14**) than to the narrower longitudinal end (**16**), of a chain link (**12**) immediately adjacent along the longitudinal chain path (LB), so that the bicycle chain (**10**) has successive chain rollers (**34**) along the longitudinal chain path (LB), which chain rollers (**34**) project between chain plates (**24**, **26**) of one and the same chain link (**12**) are arranged once in its narrower longitudinal end region (**20**) and a further time in its wider longitudinal end region (**18**) in such a way that the chain plates (**24**, **26**) of a chain link (**12**) together with the two chain rollers (**34**) arranged between them enclose a tooth engagement space (**46**) for the engagement of a tooth (**50**, **94**) of a chain wheel assembly (**82**, **86**). The bicycle chain (**10**) is designed for shifting between two coaxial rear sprockets (R**11**, R**12**) adjacent along the chain width axis (BA) and/or between two coaxial front chainrings (**83**, **85**) adjacent along the chain width axis (BA).

[0352] Example 2 includes the bicycle chain (**10**) of Example 1, wherein, for the plurality of the chain links (**12**), each of the chain plates (**24**, **26**) of the chain link (**12**) has a first offset region (**54**) located closer to the wider longitudinal end (**18**) and a second offset region (**58**) located closer to the narrower longitudinal end (**20**), A clear inner chain link width (iKW) to be measured along the chain

width axis (BA) between the chain plates (**24**, **26**) decreases as it progresses along the longitudinal chain path (LB) from the first offset region (**54**) to the second offset region (**58**). The longitudinal distance (CD) of the first offset region (**54**) and the second offset region (**58**) along the longitudinal chain path (LB) from one another at least in the inner chain link surface (**40**) of a chain link plate (**24**, **26**) differs from the radius (r) of the first chain link plate (**54**) and second chain link plate (**58**) of the chain link plates (**24**, **26**) differs from the radius (rk) of the chain rollers (**34**), at least in the virtual reference plane (BE), by no more than 15% relative to the radius (rk) of the chain rollers (**34**).

[0353] Example 3 includes the bicycle chain (**10**) of Examples 1 or 2, wherein the tooth engagement space (**46**), which is enclosed along the chain width axis (BA) by the chain plates (**24**, **26**) of a chain link (**12**) and along the longitudinal chain path (LB) by the two chain rollers (**34**) arranged between the chain plates (**24**, **26**) of the chain link (**12**), has a trapezoidal cross-section in the reference plane (BE) as a sectional plane.

[0354] Example 4 includes the bicycle chain (**10**) of Examples 2 or 3, wherein the two offset regions (**54**, **58**) of the link plates (**24**, **26**) of a chain link (**12**) are curved in opposite directions. The first offset region (**54**) is curved according to a circular path concentric with respect to the opening (**68**), and the second offset region (**58**) is curved according to a circular path concentric with respect to the opening (**69**).

[0355] Example 5 includes the bicycle chain (**10**) of Example 1, wherein the first offset region (**54'**) and the second offset region (**58**) of a chain link (**12**) are located, in the reference plane (BE), closer to the narrower longitudinal end region (**30**) than to the wider longitudinal end area (**28**) of the chain link.

[0356] Example 6 includes the bicycle chain (**10**) of Example 5, wherein the two offset regions (**54'**, **58**) of the link plates (**24**, **26**) of a chain link (**12**) are curved in the same direction, each of the two offset regions (**54'**, **58**) being curved according to a concentric circular path relative to the opening (**69**).

[0357] Example 7 includes the bicycle chain (**10**) of Example 1, wherein both the first offset region (**54**) and the second offset region (**58"**) of a chain link (**12**) are located in the reference plane (BE) closer to the wider longitudinal end region (**28**) than to the narrower longitudinal end region (**30**) of the chain link.

[0358] Example 8 includes the bicycle chain (**10**) of Example 7, wherein the two offset regions (**54**, **58"**) of the link plates (**24**, **26**) of a chain link (**12**) are curved in the same direction, each of the two offset regions (**54**, **58**) being curved according to a concentric circular path relative to the opening (**68**).

[0359] Example 9 includes the bicycle chain (**10**) of Examples 5 or 7, wherein the tooth engagement space (**46**), which is enclosed along the chain width axis (BA) by the chain plates (**24**, **26**) of a chain link (**12**) and along the longitudinal chain path (LB) by the two chain rollers (**34**) arranged between the chain plates (**24**, **26**) of the chain link (**12**), has a trapezoidal cross-sectional section and a rectangular cross-sectional section in the reference plane (BE) as a sectional plane.

[0360] Example 10 includes the bicycle chain (**10**) of Example 1, wherein the flat chain plates (**24**, **26**) of a plurality of chain links (**12**) lying opposite one another along the chain width axis (BA) are formed with offset regions which differ from one another.

[0361] Example 11 includes the bicycle chain (**10**) of Example 10, wherein a first link plate (**26**) of a chain link (**12**) has a first offset region (**54'**) and a second offset region (**58**), both of which are located in the reference plane (BE) closer to the narrower longitudinal end region (**30**) than to the wider longitudinal end region (**28**) of the chain link (**12**), and a second chain link plate (**24**) of the chain link (**12**) lying opposite the first chain link plate (**26**) along the chain width axis (BA) has a first offset region (**54**) located closer to the wider longitudinal end region (**28**) in the reference plane (BE) and a second offset region (**58**) located closer to the narrower longitudinal end region (**30**) in the reference plane (BE).

[0362] Example 12 includes the bicycle chain (**10**) of Example 10, wherein a first link plate (**26**) of a chain link (**12**) has a first offset region (**54**) located closer to the wider longitudinal end region (**28**) in the reference plane (BE) and a second offset region (**58**) located closer to the narrower longitudinal end region (**30**) in the reference plane (BE), and a second chain link plate (**24**) of the chain link (**12**) lying opposite the first chain link plate (**26**) along the chain width axis (BA) has a first offset region (**54'**) and a second offset region (**58**), both of which are located in the reference plane (BE) closer to the narrower longitudinal end region (**30**) than to the wider longitudinal end region (**28**) of the chain link (**12**).

[0363] Example 13 includes of the bicycle chain (**10**) of Example 10, wherein a first link plate (**26**) of a chain link (**12**) has a first offset region (**54**) and a second offset region (**58"**), both of which are located in the reference plane (BE) closer to the wider longitudinal end region (**28**) than to the narrower longitudinal end region (**30**) of the chain link (**12**), and a second chain link plate (**24**) of the chain link (**12**) lying opposite the chain link plate (**26**) along the chain width axis (BA) has a first offset region (**54**) located closer to the wider longitudinal end (**28**) in the reference plane (BE) and a second offset region (**58**) located closer to the narrower longitudinal end (**30**).

[0364] Example 14 includes of the bicycle chain (**10**) of Example 10, wherein a first link plate (**26**) of a chain link (**12**) has a first offset region (**54**) located closer to the wider longitudinal end (**28**) in the reference plane (BE) and a second offset region (**58**) located closer to the narrower longitudinal end (**30**), and a second chain link plate (**24**) of the chain link (**12**) lying opposite the chain link plate (**26**) along the chain width axis (BA) has a first offset region (**54**) and a second offset region (**58"**), both of which are located in the reference plane (BE) closer to the wider longitudinal end region (**28**) than to the narrower longitudinal end region (**30**) of the chain link (**12**).

[0365] Example 15 includes the bicycle chain (**10**) of any one of the Examples 10 to 14, wherein the tooth engagement space (**46**), which is bounded along the chain width axis (BA) by the chain plates (**24**, **26**) of a chain link (**12**) and along the longitudinal chain path (LB) by the two chain rollers (**34**) arranged between the chain plates (**24**, **26**) of the chain link (**12**), has two trapezoidal cross-sectional sections in the reference plane (BE) as a sectional plane.

[0366] Example 16 includes the bicycle chain (**10**) of Example 10, wherein a first link plate (**26**) of a chain link (**12**) has a first offset region (**54**) and a second offset region (**58"**), both of which are located in the reference plane (BE)

closer to the wider longitudinal end region (**28**) than to the narrower longitudinal end region (**30**) of the chain link (**12**), and a second chain link plate (**24**) of the chain link (**12**) lying opposite the first chain link plate (**26**) along the chain width axis (BA) has a first offset region (**54'**) and a second offset region (**58**), both of which are located in the reference plane (BE) closer to the narrower longitudinal end region (**30**) than to the wider longitudinal end region (**28**) of the chain link (**12**).

[0367] Example 17 includes the bicycle chain (**10**) of Example 10, wherein a first link plate (**26**) of a chain link (**12**) has a first offset region (**54'**) and a second offset region (**58**), both of which are located in the reference plane (BE) closer to the narrower longitudinal end region (**30**) than to the wider longitudinal end region (**28**) of the chain link (**12**), and a second chain link plate (**24**) of the chain link (**12**) lying opposite the first chain link plate (**26**) along the chain width axis (BA) has a first offset region (**54**) and a second offset region (**58"**), both of which are located in the reference plane (BE) closer to the wider longitudinal end region (**28**) than to the narrower longitudinal end region (**30**) of the chain link (**12**).

[0368] Example 18 includes the bicycle chain (**10**) of any one of the Examples 16 or 17, wherein the tooth engagement space (**46**), which is enclosed along the chain width axis (BA) by the chain plates (**24**, **26**) of a chain link (**12**) and along the longitudinal chain path (LB) by the two chain rollers (**34**) arranged between the chain plates (**24**, **26**) of the chain link (**12**), has two trapezoidal transverse cross-sectional sections and a rectangular cross-sectional section arranged between these as a sectional plane in the reference plane (BE).

[0369] Example 19 includes the bicycle chain (**10**) of any one of the preceding Examples, wherein, for a plurality of the chain links (**12**), a pin (**36**) connects the wider longitudinal end regions (**28**) of chain plates (**24**, **26**) of the respective chain link (**12**) lying opposite one another along the chain width axis (BA), the pin (**36**) in the wider longitudinal end region (**18**) of the respective chain link not projecting from the respective chain plate outer surface (**38**) of the chain plates (**24**, **26**) lying opposite one another.

[0370] Example 20 includes the bicycle chain (**10**) of Example 19, wherein, for a plurality of the chain rollers, each of the chain rollers is arranged on a pin, a bearing sleeve being provided between the pin and the respective chain roller, the bearing sleeve extending along a pivot axis(S) and having an axial end face or a radial end region on at least one of its end sections, the bearing sleeve being in non-positive and/or positive engagement with an associated chain link via the axial end face or the radial end region.

[0371] Example 21 includes the bicycle chain (**10**) of any one of the preceding Examples, wherein, for a plurality of the chain links, at least one of the chain plates is provided with a chamfer at the wider longitudinal end of the chain link along the longitudinal chain path LB on its inner side facing the associated chain roller as viewed in the reference plane BE as the sectional plane, or/and that on the narrower longitudinal end of the chain link along the longitudinal chain path LB, at least one of the chain plates is provided with a chamfer on its outer side facing away from the associated chain roller, viewed in the reference plane BE as a sectional plane.

[0372] Example 22 includes the bicycle chain (**10**) of any one of the preceding Examples, wherein, for a plurality of the chain links, at least one of the chain plates is provided with a chamfer at the wider longitudinal end of the chain link on its outer sides facing away from the associated chain roller, which chamfer extends at least in sections along an outer contour of the chain plate.

[0373] Example 23 includes a bicycle drive assembly (**80**) comprising, as chain wheel assemblies (**82**, **86**), a front chainring assembly (**82**) and a rear sprocket assembly (**86**) arranged at a distance therefrom. The front chainring assembly (**82**) and the rear sprocket assembly (**86**) are each rotatable about assembly axes (AO, AQ) parallel to one another. The bicycle drive assembly (**80**) comprises a bicycle chain (**10**) according to one of the preceding examples one to twenty-two, which rotates closed around the assembly axes (AO, AQ) and is in positive engagement with each of these chain wheel assemblies (**82**, **86**) for transmitting torque from the front chainring assembly (**82**) to the rear sprocket assembly (**86**). At least one chain wheel assembly (**82**, **86**) from the front chainring assembly (**82**) and the rear sprocket assembly (**86**) has, as a shifting chain wheel assembly (**82**, **86**), at least two coaxial chain wheels (R**11**, R**12**) with different numbers of chainwheel teeth. The bicycle drive assembly (**80**) has a derailleur (**92**) which is displaceable at least along the parallel assembly axes (AO, AQ), which is traversed by the bicycle chain (**12**) and which is designed to shift the bicycle chain from one chain wheel (R**11**) of the at least two coaxial chain wheels (R**11**, R**12**), with which the bicycle chain (**10**) is engaged, to at least one other chain wheel (R**12**) of the at least two coaxial chain wheels (R**11**, R**12**) by displacement along the assembly axis (AO) of the shifting sprocket assembly (**86**), in order to bring the other chain wheel (R**12**) into engagement with the bicycle chain (**10**).

[0374] Example 24 includes the bicycle drive assembly (**80**) of Example 23, wherein the coaxial sprockets (R**11**, R**12**) of the shifting sprocket assembly (**86**) are arranged in a following direction (FR) with descending numbers of sprocket teeth, at least one tooth (**94**) deviating from a matching tooth shape of a plurality of teeth (**50**) of the target sprocket (R**12**) being formed as a catch tooth (**94**) for a first shifting operation from a start sprocket (R**11**) with a lower number of teeth to a target sprocket (R**12**) with a higher number of teeth on the target sprocket (R**12**), which target sprocket is adjacent in the opposite direction to the following direction (FR).

[0375] Example 25 includes the bicycle drive assembly (**80**) of Example 24, wherein the bicycle chain (**10**) is shifted from the start sprocket (R**11**) with a low number of sprocket teeth to the adjacent target sprocket (R**12**) with a higher number of sprocket teeth only along a first shift lane (**101**), the number of first shift lanes (**101**) on the target sprocket (R**12**) being less than or equal to the difference in the number of teeth between the start sprocket (R**11**) and the target sprocket (R**12**).

[0376] Example 26 includes the bicycle drive assembly (**80**) of Example 25, wherein the catch tooth (**94**) of a first shifting lane (**101**) and the tooth (**95**) immediately following the catch tooth (**94**) of the first shifting lane (**101**) in a forward direction of rotation VD are designed to be shorter in the circumferential direction compared to a base tooth (**99**).

[0377] Example 27 includes the bicycle drive assembly (**80**) of Example 26, wherein the first shifting lane (**101**) has a preparation recess (**103**), the preparation recess (**103**)

being formed with a preparation tooth (**98**). The preparation recess (**103**) extends over the tooth (**99**) immediately leading the preparation tooth (**98**) in the forward direction of rotation VD and ending in a tooth gap between the leading tooth (**99**) and the tooth (**109**) immediately leading the leading tooth (**99**) in the forward direction of rotation VD.

[0378] Example 28 includes the bicycle drive assembly (**80**) of Example 27, wherein the rear bicycle sprocket assembly (**86**) has two adjacent sprockets whose numbers of teeth differ by only one tooth or by only two teeth, wherein at least one first shifting lane (**101**) is provided, wherein in the first shifting lanes (**101**) a radial center axis (**98***a*) of the preparatory tooth (**98**) of a smaller pinion of the two adjacent pinions is arranged between a non-load flank (**94***e*) of the catch tooth (**94**) of a next larger pinion and a load flank (**99***a*) of the tooth (**99**) immediately leading the preparatory tooth (**98**) of the next larger pinion in the forward direction of rotation VD.

[0379] Example 29 includes the bicycle drive assembly (**80**) of one of the Examples 26 to 28, wherein each first shifting lane (**101**) has exactly one catch tooth (**94**).

[0380] Example 30 includes the bicycle drive assembly (**80**) of Examples 26 to 29, wherein the preparation tooth (**98**) of each first shifting lane (**101**) is removed.

[0381] Example 31 includes the bicycle drive assembly (**80**) of any one of Examples 23 to 30, wherein the coaxial sprockets (R**11**, R**12**) of the shifting sprocket assembly (**86**) are arranged in a following direction (FR) with descending numbers of sprocket teeth, wherein, for carrying out a second shifting operation from a start sprocket (R**12**) with a higher number of teeth to an adjacent target sprocket (R**11**) in the following direction (FR) with a lower number of teeth on the start sprocket (R**12**), at least one tooth (**96**) is designed as a switch tooth (**96**) for the second shifting operation, deviating from a matching tooth shape of a plurality of teeth (**50**) of the start sprocket (R**12**).

[0382] Example 32 includes the bicycle drive assembly (**80**) of Example 31, wherein the bicycle chain (**10**) is shifted from the starting sprocket (R**12**) with a higher number of sprocket teeth to the adjacent target sprocket (R**11**) with a lower number of sprocket teeth only along a second shifting lane (**102**), the number of second shifting lanes (**102**) on the starting sprocket (R**12**) being less than or equal to the difference in the number of teeth between the starting sprocket (R**11**) and the target sprocket (R**12**).

[0383] Example 33 includes the bicycle drive assembly (**80**) of Example 32, wherein the second shifting lane (**102**) has a support tooth (**106**), the support tooth (**106**) of the second shifting lane (**102**) and a tooth (**107**) immediately preceding the support tooth (**106**) of the second shifting lane (**102**) in the forward direction of rotation VD being shorter in the circumferential direction compared to a base tooth (**109**).

[0384] Example 34 includes the bicycle drive assembly (**80**) of Example 32 or 33, wherein on the starting sprocket (R**12**) with a higher number of sprocket teeth, the support tooth (**106**) of the second shifting lane (**102**) and the tooth (**107**) immediately leading the support tooth (**106**) of the second shifting lane (**102**) in the forward direction of rotation VD have chamfers (**106***a*) and (**107***a*) on the flanks leading in the forward direction of rotation VD on the side facing away from the target sprocket (R**11**) with a lower number of sprocket teeth.

[0385] Example 35 includes the bicycle drive assembly (**80**) of any one of Examples 31 to 34, wherein the rear sprocket assembly (**86**) has two adjacent sprockets whose numbers of teeth differ by only one tooth, wherein a radial center axis (**96***c*) of the switch tooth (**96**) of the second shifting lane (**102**) on the next smaller pinion is arranged between the non-load flank (**109***a*) of the tooth (**109**) immediately following the switch tooth (**96**) of the next larger pinion in the forward direction of rotation VD on the one hand and the load flank (**106***b*) of the support tooth (**106**) of the next larger pinion on the other hand.

[0386] Example 36 including the bicycle drive assembly (**80**) of Example 35, wherein each second shifting lane (**102**) has exactly one deflector tooth (**96**).

[0387] Example 37 includes the bicycle drive assembly (**80**) of Example 36, wherein exactly one deflector tooth (**96**) of each second shifting lane (**102**) is removed.

[0388] Example 38 includes the bicycle drive assembly (**80**) of any one of Examples 23 to 37, wherein the front chainring assembly (**82**) comprises exactly one chainring (**84**), wherein a plurality of the teeth (**132**) of the chainring (**84**) have the same geometry, which are adapted to the geometry of the chain plates (**24**, **26**) of a chain link (**12**) of the chain (**10**).

[0389] Example 39 includes the bicycle drive assembly (**80**) of Example 38, wherein the teeth (**132**) of the chainring (**84**) have a chamfer (**134***b*) on one or both sides of their load flanks (**134**), the load flank (**134**) of a tooth (**132**) being arranged at a distance (**134***a*) from the chamfer (**134***b*).

[0390] Example 40 includes the bicycle drive assembly (**80**) of Example 38 or 39, wherein the teeth (**132**) of the chainring (**84**) have a non-load-bearing rear flank facing away from the load flank and arranged at a distance from a main tooth body (**131**).

[0391] Example 41 includes the bicycle drive assembly (**80**) of Example 40, wherein the single-sided or double-sided chamfer (**134***b*) of the load flank of the teeth (**132**) is formed with an angle (**138**) relative to the forward direction of rotation VD in radial plan view of the respective tooth (**132**), wherein the angle (**138**) in the substantially is matched to the geometry of the tooth engagement space (**46**) of the bicycle chain according to one of examples 1 to 19, which is determined by the geometry of the chain plates (**24**, **26**) of a chain link and the chain rollers arranged between them.

[0392] Example 42 includes the bicycle drive assembly (**80**) of Example 23, wherein the front chainring assembly (**82**) comprises a large chainring (**83**) and a small chainring (**85**), the front chainring assembly (**82**) being designed for a first shifting operation of a bicycle chain (**10**) from the small chainring (**85**) to the large chainring (**83**) and a second shifting operation of a bicycle chain (**10**) from the large chainring (**83**) to the small chainring (**85**).

[0393] Example 43 includes the bicycle drive assembly (**80**) of Example 42, wherein for a plurality of the teeth (**146**) of the large chainring (**83**) and/or for a plurality of the teeth (**148**) of the small chainring (**85**) of the front chainring assembly (**82**) it applies that these each have a chamfer (**146***b*, **148***b*) on the inner side (**83***a*, **85***a*) of their load flanks (**146***a*, **148***a*) and/or a chamfer (**146***c*, **148***c*) on the outer side (**83***b*, **85***b*) of their load flanks (**146***a*, **148***a*).

[0394] Example 44 includes the bicycle drive assembly (**80**) of Example 42 or 43, wherein the large chainring (**83**) has a rivet (**142**) on its inner side (**83***a*) facing the small

chainring (**85**) for a first shifting operation and a recess (**142***a*) leading the rivet (**142**) in the forward direction of rotation VD.

[0395] Example 45 includes the bicycle drive assembly (**80**) of any one of Examples 42 to 44, wherein a first tooth (**140**) immediately following the rivet (**142**) in the forward direction of rotation VD has a recess (**140***b*) on the inside of the large chainring (**83**) and a chamfer (**140***a*) on its trailing flank.

[0396] Example 46 includes the bicycle drive assembly (**80**) of any one of Examples 42 to 45, wherein a second tooth (**144**) of the large chainring (**83**) lagging behind the rivet (**142**) in the forward direction of rotation VD has a shorter radial length than the standard teeth of the large chainring (**83**) and a chamfer (**144***a*) which extends along an outer side (**83***b*) of the large chainring (**83**) from the load flank (**144***b*) to a trailing edge (**144***c*).

[0397] Example 47 includes the bicycle drive assembly (**80**) of any one of Examples 42 to 46, wherein the large chainring (**83**) has at least one tooth (**152**, **154**) which has a shorter radial length than a standard tooth of the large chainring (**83**) and whose tooth tip (**152***a*, **154***a*) is chamfered such that the radially outer surface of the tooth tip (**152***a*, **154***a*) slopes towards the inner side (**83***a*) of the large chainring (**83**).

[0398] Example 48 includes the bicycle drive assembly (**80**) of any one of Examples 42 to 47, wherein the large chainring (**83**) has at least one chain catch pin (**150**) on its outer side (**83***b*), the pin (**150**) being arranged radially inside and in the immediate vicinity of the teeth with respect to the assembly axis AQ.

[0399] Example 49 includes the bicycle drive assembly (**80**) of any one of Examples 42 to 48, wherein the large chainring (**83**) has at least one tooth (**158**) which has a shorter radial length than a standard tooth of the large chainring (**83**) and whose tooth tip (**158***a*) is chamfered such that the radially outer surface of the tooth tip (**158***a*) slopes towards the outer side (**83***b*) of the chainring (**83**).

[0400] Example 50 includes the bicycle drive assembly (**80**) of any one of Examples 42 to 49, wherein for a plurality of the teeth (**156**) of the large chainring (**83**), the teeth (**156**) on the outer side (**83***b*) of the large chainring (**83**) have a chamfer (**156***b*) on the rear flank trailing in the forward direction of rotation VD, and in that the teeth (**156**) on the inner side (**83***a*) of the large chainring (**83**) have a chamfer (**156***a*) on the load flank of the teeth (**156**).

[0401] Example 51 includes bicycle drive assembly (**80**) of any one of examples 42 to 50, wherein the large chainring (**83**) has at least one functional tooth (**160**), the load flank (**162**) being arranged at a distance (**162***a*) from the main tooth body (**161**) on the inner side (**83***a*) of the functional tooth (**160**), and the non-load-bearing rear flank (**164**) lagging in the forward direction of rotation VD being arranged at a distance (**164***a*) from the main tooth body (**161**) on the inner side (**83***a*) of the functional tooth (**160**).

[0402] Example 52 includes the bicycle drive assembly (**80**) of Examples 23 to 51, wherein the bicycle drive assembly (**80**) comprises a chain wheel shifter (**91**) with a mechanically or electromechanically actuatable derailleur (**92**), wherein the derailleur (**92**) has at least one, preferably two deflection pulleys (**170**), wherein the at least one deflection pulley (**170**) has only teeth (**172**) of the same geometry and wherein the geometry of the teeth (**172**) of the deflection pulley (**170**) is matched to the geometry of the tooth engagement space of the bicycle chain of one of examples 1 to 19.

[0403] Example 53 includes the bicycle drive assembly (**80**) of Example 52, wherein the teeth (**172**) of the deflection pulley (**170**) have clearance cuts (**174***a*) on their leading flanks (**174**) in the forward direction of rotation VD and/or clearance cuts (**176***a*) on trailing rear flanks (**172***b*) with respect to the forward direction of rotation VD.

[0404] Example 54 includes the bicycle drive assembly (**80**) of any one of Examples 23 to 53, wherein when the bicycle chain (**10**) moves in a direction of rotation driving forward travel, the narrower longitudinal end (**20**) of a chain link (**12**) leads and the wider longitudinal end (**18**) trails.

[0405] Example 55 includes the bicycle drive assembly (**80**) of any one of Examples 23 to 53, wherein when the bicycle chain (**10**) moves in a direction of rotation driving forward travel, the wider longitudinal end (**18**) of a chain link (**12**) leads and the narrower longitudinal end (**20**) trails.

[0406] The illustrations of the embodiments described herein are intended to provide a general understanding of the structure of the various embodiments. The illustrations are not intended to serve as a complete description of all of the elements and features of apparatus and systems that utilize the structures or methods described herein. Many other embodiments may be apparent to those of skill in the art upon reviewing the disclosure. Other embodiments may be utilized and derived from the disclosure, such that structural and logical substitutions and changes may be made without departing from the scope of the disclosure. Additionally, the illustrations are merely representational and may not be drawn to scale. Certain proportions within the illustrations may be exaggerated, while other proportions may be minimized. Accordingly, the disclosure and the figures are to be regarded as illustrative rather than restrictive.

[0407] While this specification contains many specifics, these should not be construed as limitations on the scope of the invention or of what may be claimed, but rather as descriptions of features specific to particular embodiments of the invention. Certain features that are described in this specification in the context of separate embodiments can also be implemented in combination in a single embodiment. Conversely, various features that are described in the context of a single embodiment can also be implemented in multiple embodiments separately or in any suitable sub-combination. Moreover, although features may be described above as acting in certain combinations and even initially claimed as such, one or more features from a claimed combination can in some cases be excised from the combination, and the claimed combination may be directed to a sub-combination or variation of a sub-combination.

[0408] Although specific embodiments have been illustrated and described herein, it should be appreciated that any subsequent arrangement designed to achieve the same or similar purpose may be substituted for the specific embodiments shown. This disclosure is intended to cover any and all subsequent adaptations or variations of various embodiments. Combinations of the above embodiments, and other embodiments not specifically described herein, are apparent to those of skill in the art upon reviewing the description.

[0409] The Abstract of the Disclosure is provided to comply with 37 C.F.R. § 1.72 (b) and is submitted with the understanding that it will not be used to interpret or limit the scope or meaning of the claims. In addition, in the foregoing Detailed Description, various features may be grouped

together or described in a single embodiment for the purpose of streamlining the disclosure. This disclosure is not to be interpreted as reflecting an intention that the claimed embodiments require more features than are expressly recited in each claim. Rather, as the following claims reflect, inventive subject matter may be directed to less than all of the features of any of the disclosed embodiments. Thus, the following claims are incorporated into the Detailed Description, with each claim standing on its own as defining separately claimed subject matter.

[0410] It is intended that the foregoing detailed description be regarded as illustrative rather than limiting and that it is understood that the following claims including all equivalents are intended to define the scope of the invention. The claims should not be read as limited to the described order or elements unless stated to that effect. Therefore, all embodiments that come within the scope and spirit of the following claims and equivalents thereto are claimed as the invention.

What is claimed is:

1. A bicycle chain comprising:

a plurality of chain links that follow one another along a virtual longitudinal chain path, wherein the plurality of chain links that immediately follow one another along the longitudinal chain path are pivotable relative to one another about mutually parallel virtual pivot axes, wherein the pivot axes extend along a virtual transverse chain axis oriented transversely to the longitudinal chain path, wherein the two pivot axes of a chain link that are spaced apart from one another along the longitudinal chain path define a virtual reference plane for the chain link, containing the pivot axes and the longitudinal chain path, wherein each chain link has two chain plates that are formed separately from one another and are located opposite one another along the transverse chain axis, wherein the chain plates have their greatest dimensions along the longitudinal chain path and along a vertical chain axis that extends both transversely to the longitudinal chain path and transversely to the transverse chain axis, wherein the chain plates are formed and arranged in an offset manner along the longitudinal chain path such that each chain link has, in the reference plane, a wider longitudinal end region, along the transverse chain axis, with a larger link width and a narrower longitudinal end region, opposite the wider longitudinal end region along the longitudinal chain path, with a smaller link width, wherein a chain roller is accommodated between the chain plates in the narrower longitudinal end region located closer to a narrower longitudinal end than to a wider longitudinal end, wherein, for chain links that follow one another along the longitudinal chain path, it is the case that in each case the narrower longitudinal end region of the chain link projects into the wider longitudinal end region, located closer to the wider longitudinal end than to the narrower longitudinal end, of the chain link that is immediately adjacent along the longitudinal chain path, such that the bicycle chain has chain rollers following one another along the longitudinal chain path that are arranged between chain plates of one and the same chain link once in the narrower longitudinal end region thereof and once more in the wider longitudinal end region thereof such that the chain plates of the chain link, together with the two chain rollers arranged between them, enclose a tooth engagement space for the engagement of a tooth of a chain wheel assembly, wherein the bicycle chain is configured for shifting between two coaxial rear sprockets that are adjacent along the transverse chain axis and/or between two coaxial front chainrings that are adjacent along the transverse chain axis.

2. The bicycle chain of claim **1**, wherein, for the plurality of the chain links, each of the chain plates of the chain link has a first offset region located closer to the wider longitudinal end and a second offset region located closer to the narrower longitudinal end, wherein a clear inner chain link width to be measured between the chain plates along the transverse chain axis decreases on progressing along the longitudinal chain path from the first to the second offset region, wherein the longitudinal spacing of the first and the second offset region from one another along the longitudinal chain path, at least in the chain plate inner surface of the chain plate, differs from the radius of the chain rollers, at least in the virtual reference plane, by no more than 15% relative to the radius of the chain rollers.

3. The bicycle chain of claim **1**, wherein the tooth engagement space, which is enclosed by the chain plates of the chain link along the transverse chain axis and by the two chain rollers, arranged between the chain plates of the chain link, along the longitudinal chain path, has a trapezoidal cross section in the reference plane as a sectional plane.

4. The bicycle chain of claim **2**, wherein the first and second offset regions of the link plates of the chain link are curved in opposite directions, the first offset region being curved according to a concentric circular path with respect to an opening in the wider longitudinal end region, and the second offset region being curved according to a concentric circular path with respect to an opening in the narrower longitudinal end region.

5. The bicycle chain of claim **2**, wherein the first offset region and the second offset region of the chain link are located, at least in the reference plane, closer to the narrower longitudinal end region than to the wider longitudinal end region of the chain link.

6. The bicycle chain of claim **5**, wherein the first and second offset regions of the link plates of the chain link are curved in the same direction, each of the first and second offset regions being curved according to a concentric circular path relative an opening in the narrower longitudinal end.

7. The bicycle chain of claim **2**, wherein the first and second offset regions of the chain link are located in the reference place closer to the wider longitudinal end than to the narrower longitudinal end of the chain link.

8. The bicycle chain of claim **7**, wherein the first and second offset regions of the link plates of the chain link are curved in the same direction, each of the first and second offset regions being curved according to a concentric circular path relative an opening in the wider longitudinal end.

9. The bicycle chain of claim **5**, wherein the tooth engagement space, which is enclosed along the chain width axis by the chain plates of the chain link and along the longitudinal chain path by the two chain rollers arranged between the chain plates of the chain link, has a trapezoid cross-sectional section and a rectangular cross-sectional section in the reference plane as a sectional plane.

10. The bicycle chain of claim **1**, wherein the chain plates of the plurality of chain links lying opposite one another

along the transverse chain axis are formed with offset regions which differ from one another.

11. The bicycle chain of claim **10**, wherein a first chain link plate of the chain link has a first offset region and a second offset region, both of which are located in the reference plane closer to the narrower longitudinal end region than to the wider longitudinal end region of the chain link and a second chain link plate of the chain link lying opposite the first chain link plate along the transverse chain axis has a first offset region located closer to the wider longitudinal end region in the reference plane and a second offset region located closer to the narrower longitudinal end region in the reference plane.

12. The bicycle chain of claim **10**, wherein a first chain link plate of the chain link has a first offset region located closer to the wider longitudinal end region in the reference plane and a second offset region located closer to the narrower longitudinal end region in the reference plane, and a second chain link plate of the chain link lying opposite the first chain link plate along the transverse chain axis has a first offset region and a second offset region, both of which are located in the reference plane closer to the narrower longitudinal end region than to the wider longitudinal end region of the chain link.

13. The bicycle chain of claim **10**, wherein a first chain link plate of the chain link has a first offset region and a second offset region, both of which are located in the reference plane closer to the wider longitudinal end region than to the narrower longitudinal end region of the chain link, and a second chain link plate of the chain link lying opposite the chain link plate along the transverse chain axis has a first offset region located closer to the wider longitudinal end region in the reference plane and a second offset region located closer to the narrower longitudinal end region.

14. The bicycle chain of claim **10**, wherein a first chain link plate of the chain link has a first offset region located closer to the wider longitudinal end in the reference plane and a second offset region located closer to the narrower longitudinal end, and a second chain link plate of the chain link lying opposite the chain link plate along the transverse chain axis has a first offset region and a second offset region, both of which are located in the reference plane closer to the wider longitudinal end region than to the narrower longitudinal end region of the chain link.

15. The bicycle chain of claim **10**, wherein the tooth engagement space, which is bounded along the transverse chain axis by the chain plates of the chain link and along the longitudinal chain path by the two chain rollers arranged between the chain plates of the chain link, has two trapezoidal cross-sectional sections in the reference plane as a sectional plane.

16. The bicycle chain of claim **10**, wherein a first chain link plate has a first offset region and a second offset region, both of which are located in the reference plane closer to the wider longitudinal end region than to the narrower longitudinal end region of the chain link and a second chain link plate of the chain link lying opposite the first chain link plate along the transverse chain axis has a first offset region and a second offset region, both of which are located in the reference plane closer to the narrower longitudinal end region than to the wider longitudinal end region of the chain link.

17. The bicycle chain of claim **10**, wherein a first chain link plate of the chain link has a first offset region and a second offset region, both of which are located in the reference plane closer to the narrower longitudinal end region than to the wider longitudinal end region of the chain link, and a second chain link plate of the chain link lying opposite the first chain link plate along the transverse chain axis has a first offset region and a second offset region, both of which are located in the reference plane closer to the wider longitudinal end region than to the narrower longitudinal end region of the chain link.

18. The bicycle chain of claim **16**, wherein the tooth engagement space which is enclosed along the transverse chain axis by the chain plates of the chain link and along the longitudinal chain path by the two chain rollers arranged between the chain plates of the chain link, has two trapezoidal transverse cross-sectional sections and rectangular cross-sectional section arranged between them as a sectional plane in the reference plane.

19. The bicycle chain of claim **1**, wherein, for the plurality of the chain links, a pin connects the wider longitudinal end regions of the chain plates of the respective chain links lying opposite another along the chain width axis, the pin in the wider longitudinal end region of the respective chain link not projecting from the respective chain plate outer surface of the chain plates lying opposite one another.

20. The bicycle chain of claim **19**, wherein, for the plurality of the chain rollers, each of the chain rollers is arranged on a pin, a bearing sleeve being provided between the pin and the respective chain roller, the bearing sleeve extending along a pivot axis and having an axial end face or a radial end region on at least one of its end sections, the bearing sleeve being in non-positive and/or positive engagement with an associated chain link via the axis end face of the radial end region.

21. The bicycle chain of claim **1** wherein, for the plurality of the chain links, at least one of the chain plates is provided with a chamfer at the wider longitudinal end of the chain link along the longitudinal chain path on its inner side facing the associated chain roller as viewed in the reference plane as the sectional plane, and/or on the narrower longitudinal end of the chain link along the longitudinal chain path, at least one of the chain plates is provided with a chamfer on its outer side facing away from the associated chain roller, viewed in the reference plane as a sectional plane.

22. The bicycle chain of claim **1**, wherein, for the plurality of chain links, at least one of the chain plates is provide with a chamfer at the wider longitudinal end of the chain link on its outer sides facing away from the associated chain roller, which chamfer extends at least in sections along an outer contour of the chain plate.

* * * * *