US 20250287481A1

(19) United States

(12) Patent Application Publication

TOMITA et al.

(10) Pub. No.: US 2025/0287481 A1

(43) Pub. Date: Sep. 11, 2025

(54) **HEATING DEVICE**

(71) Applicants: **TOYOTA JIDOSHA KABUSHIKI KAISHA**, Toyota-shi (JP); **K.K. SUN METALON**, Yokohama City (JP)

(72) Inventors: **Takashi TOMITA**, Toyota-shi (JP); **Yuichi FURUKAWA**, Toyota-shi (JP); **Kazuhiko NISHIOKA**, Yokohama City (JP); **Takashi YASU**, Yokohama City (JP); **Yuki MAEDA**, Yokohama City (JP); **Daichi SUZUKI**, Yokohama City (JP)

(21) Appl. No.: **19/074,130**

(22) Filed: **Mar. 7, 2025**

(30) **Foreign Application Priority Data**

Mar. 8, 2024 (JP) 2024-035502

Publication Classification

(51) **Int. Cl.**

H05B 6/80 (2006.01)

H05B 6/64 (2006.01)

(52) **U.S. Cl.**

CPC ***H05B 6/802*** (2013.01); ***H05B 6/6402*** (2013.01); ***H05B 6/6411*** (2013.01); *H05B 2214/03* (2013.01)

(57) **ABSTRACT**

There is provided a heating device that is capable of increasing heating efficiency of a heating target by microwave irradiation. The heating device includes a microwave irradiator configured to irradiate a heating target with microwaves, and a collector configured to collect fluid generated from the heating target that is irradiated with the microwaves. The microwaves are electromagnetic waves with a frequency of 300 MHz to 30 GHz, for example. The heating target includes metal, for example. Furthermore, the heating target includes non-metal such as oil, organic compound, and water, for example. When the heating target is irradiated with the microwaves, the heating target is heated, and non-metal with lower melting point and boiling point than metal becomes fluid and is separated from the heating target.

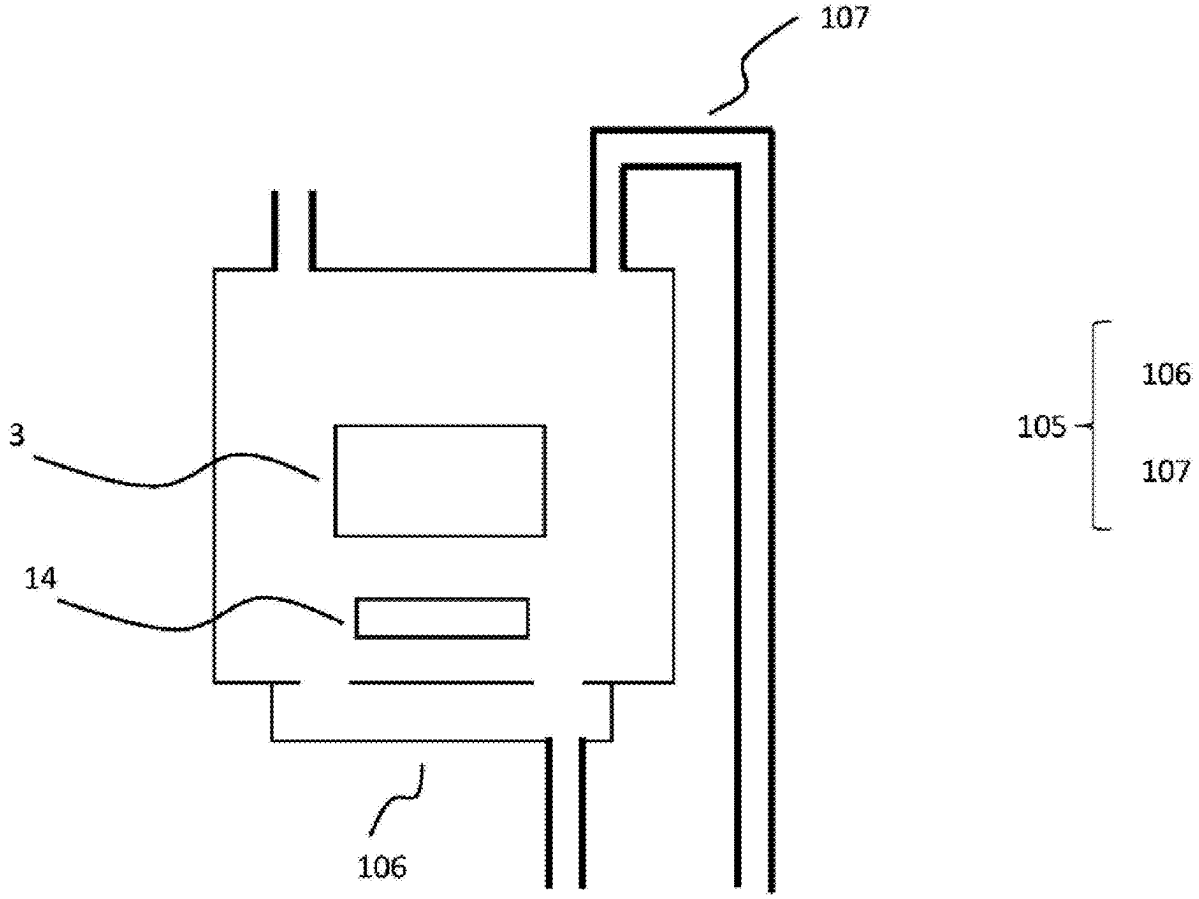

Fig. 1

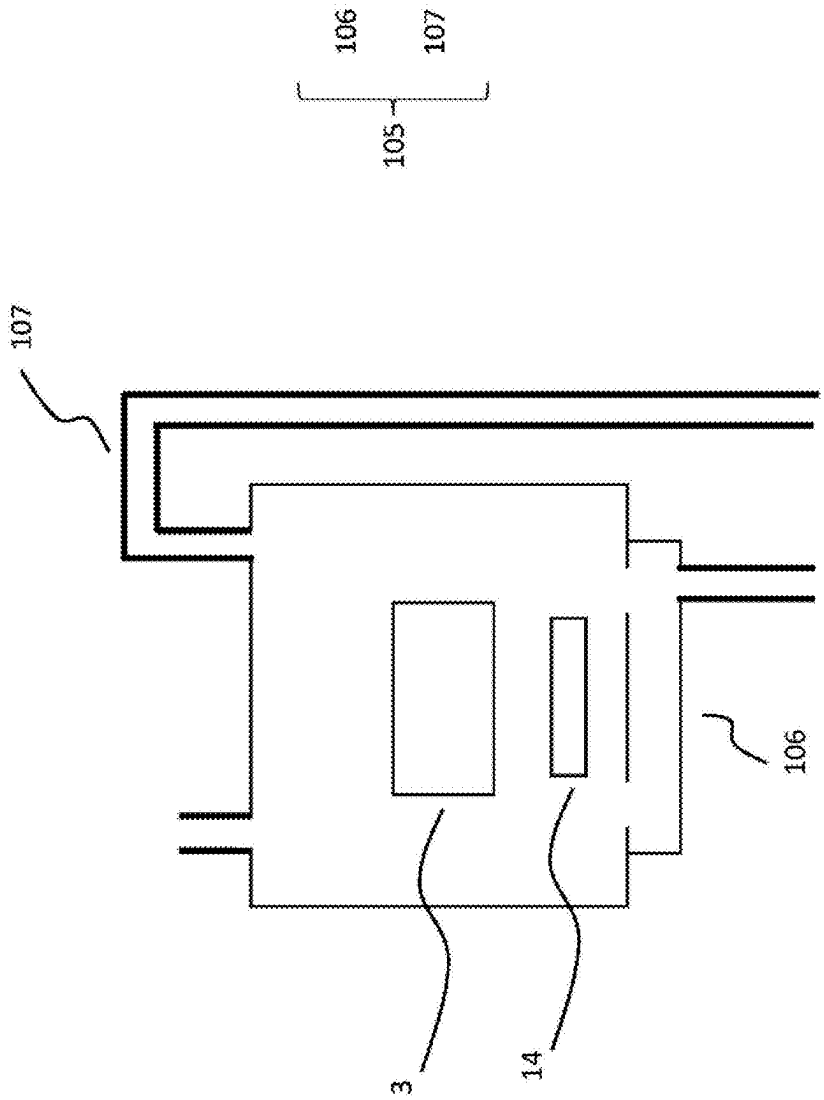

Fig. 2

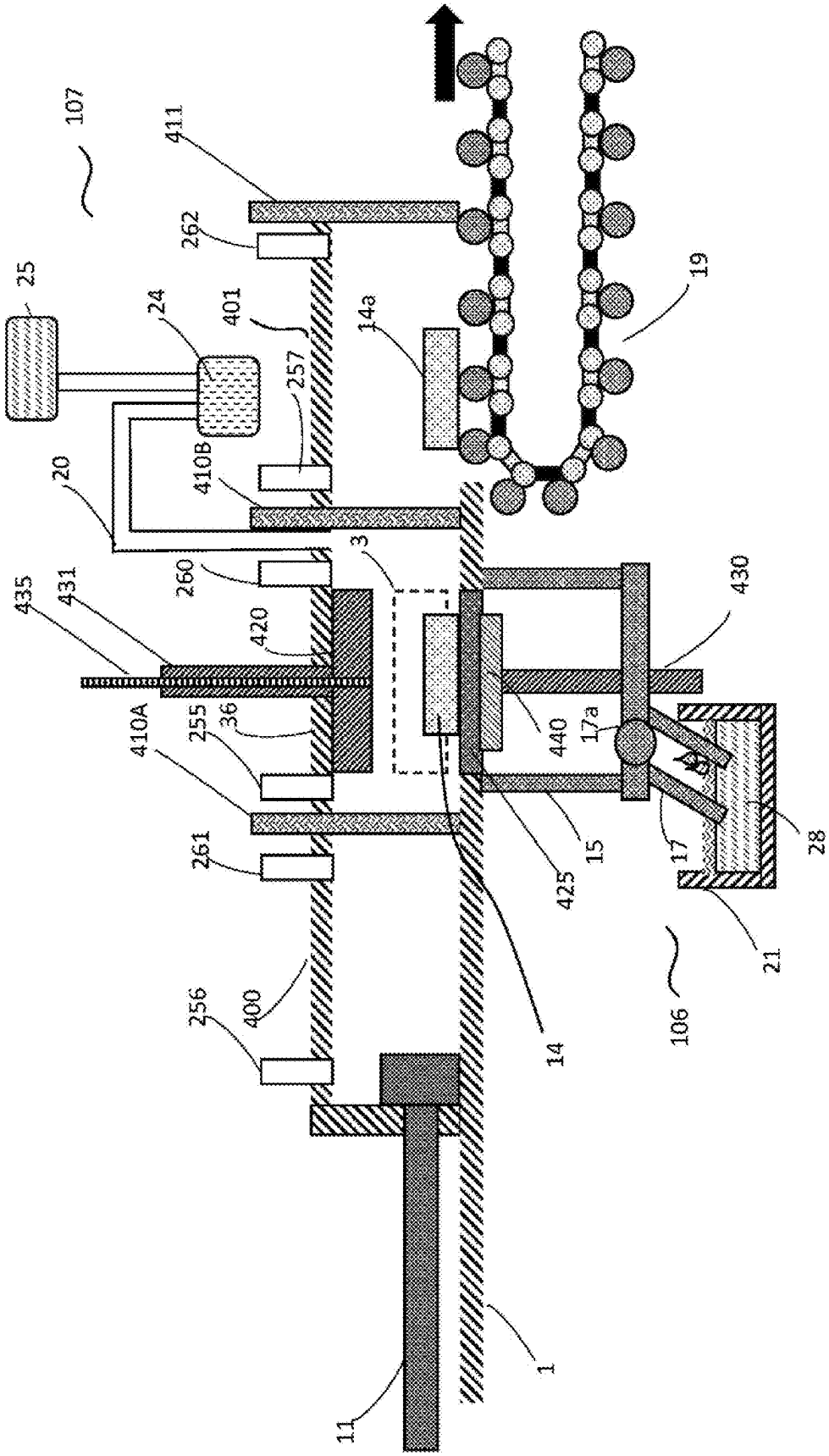
107
411
262
25
24
401
14a
19
257
410B
20
3
260
435
431
420
430
440
17a
410A
255
36
15
17
28
261
425
21
106
256
400
14
1
11

Fig. 3

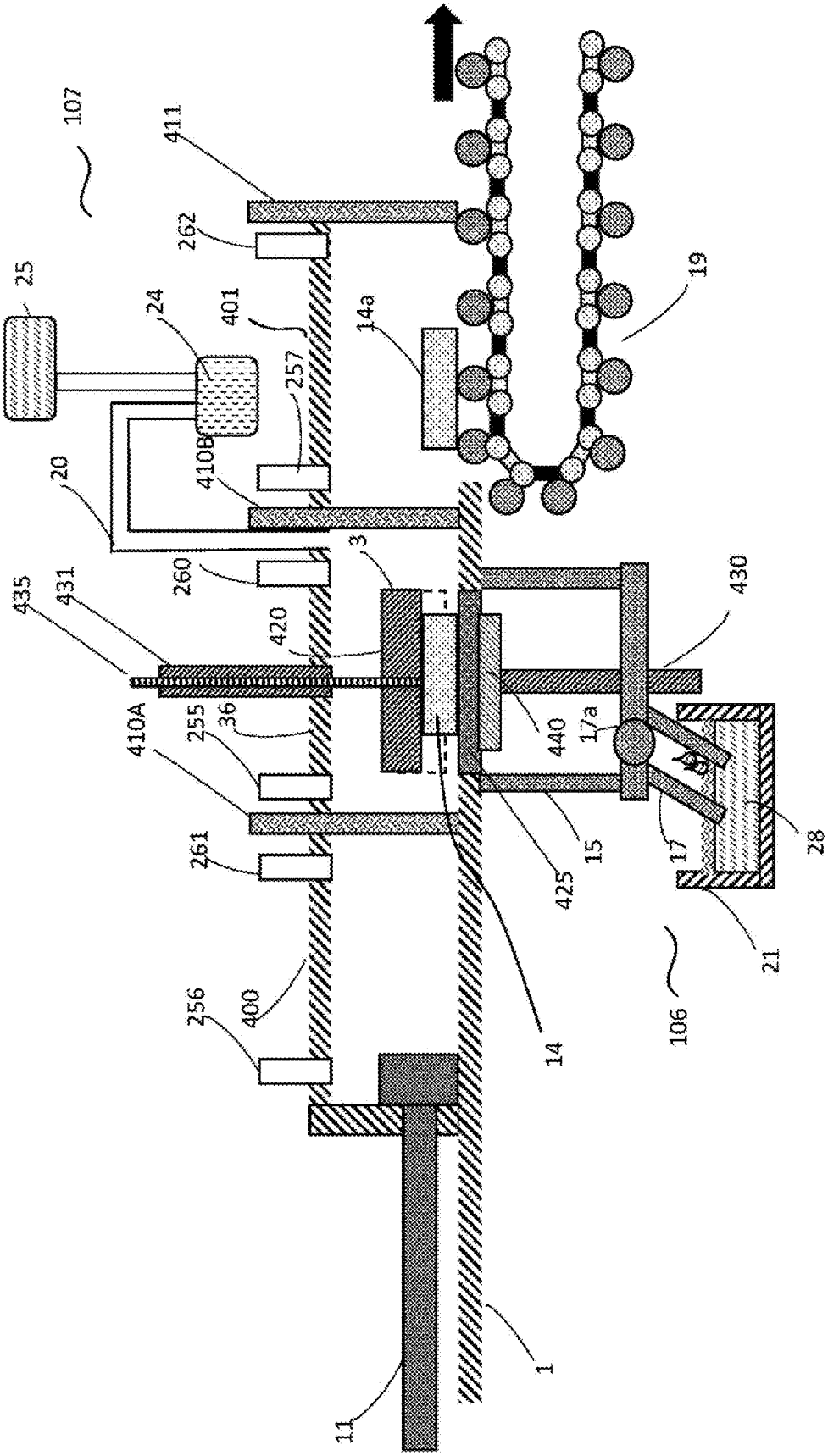
107
25
24
20
411
262
401
257
410B
260
435
431
420
410A
255
36
261
256
400
3
14a
19
430
440
17a
425
15
17
28
21
106
14
1
11

Fig. 4

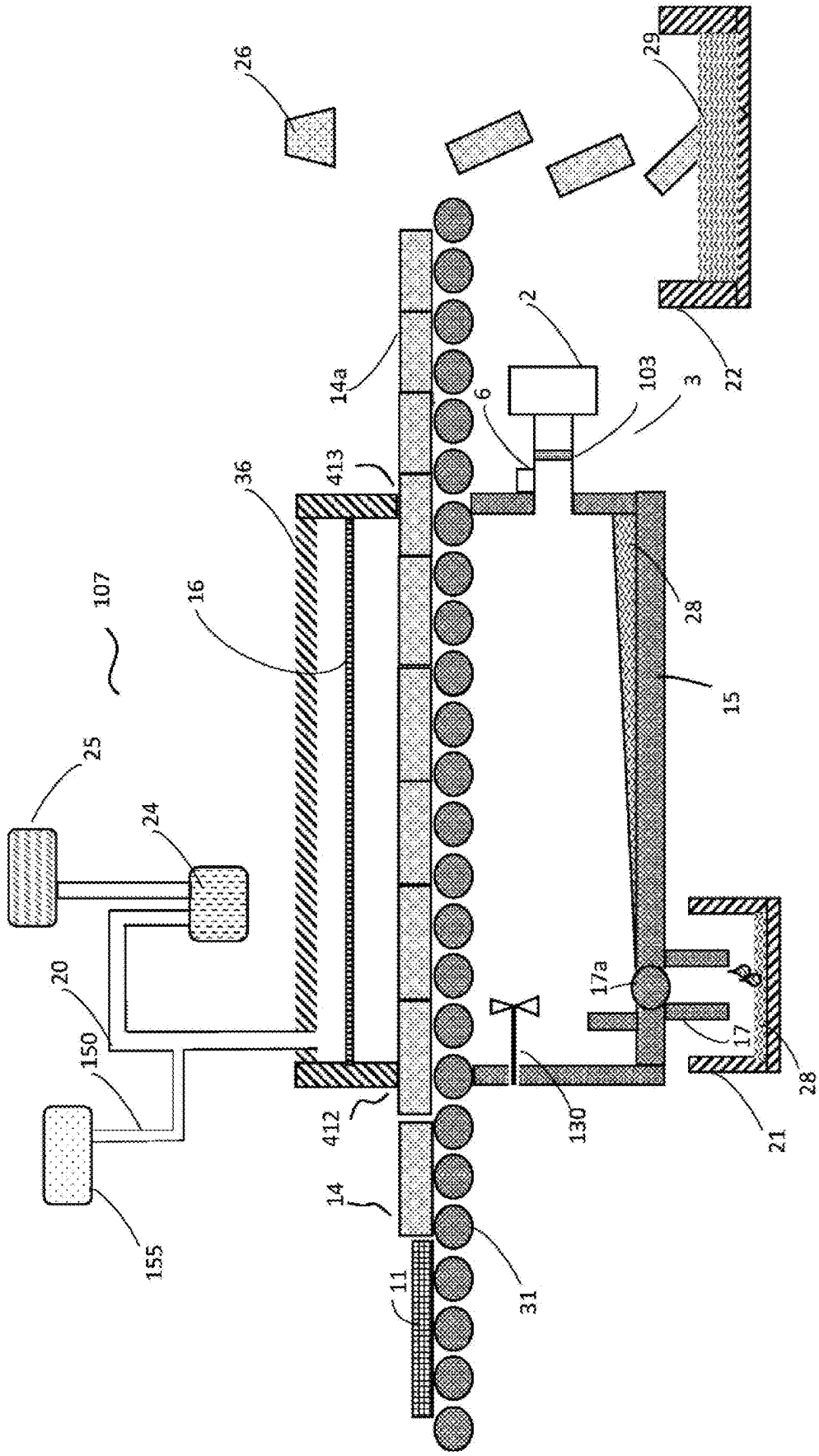
26
29
22
2
103
3
6
14a
413
36
107
16
28
15
25
24
20
150
155
17a
17
28
21
130
412
14
11
31

Fig. 5

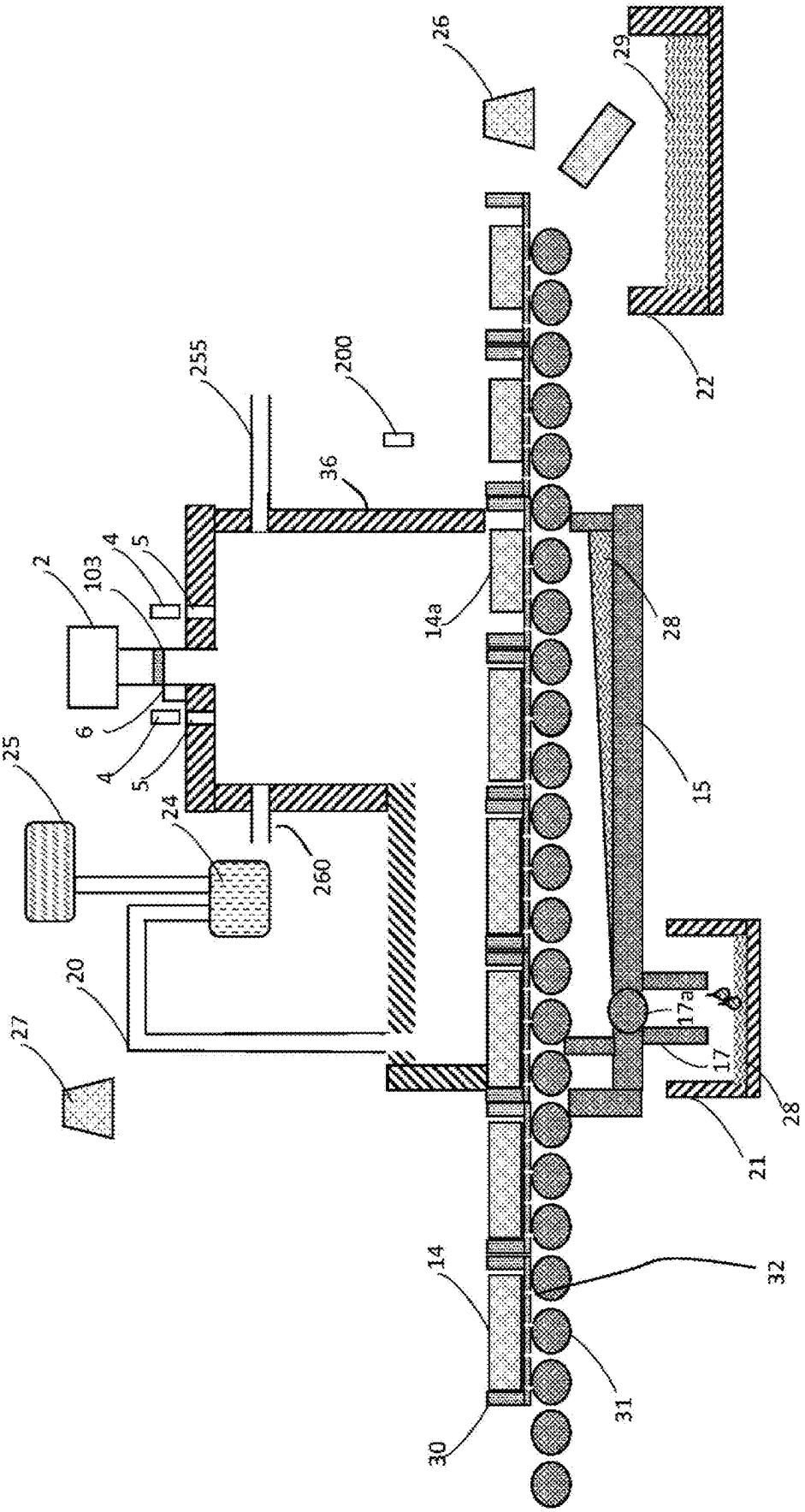
26
29
22
255
200
36
2
103
4
5
14a
28
6
4
5
15
25
24
260
20
17a
17
27
28
21
14
32
31
30

Fig. 6

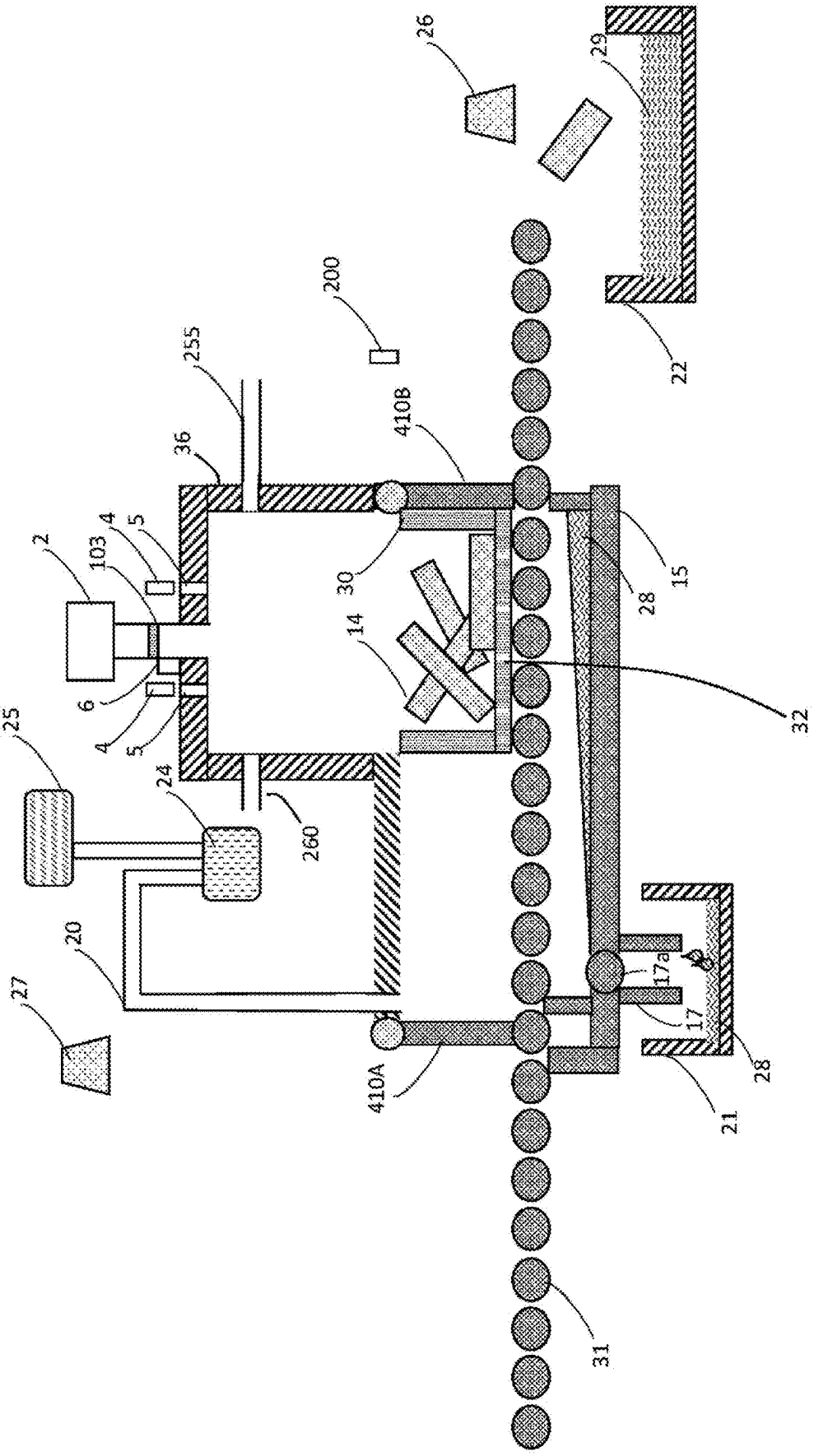
2
103
4
5
6
4
5
36
255
200
410B
30
14
26
29
22
15
28
32
25
24
260
20
27
410A
17a
17
28
21
31

Fig. 7

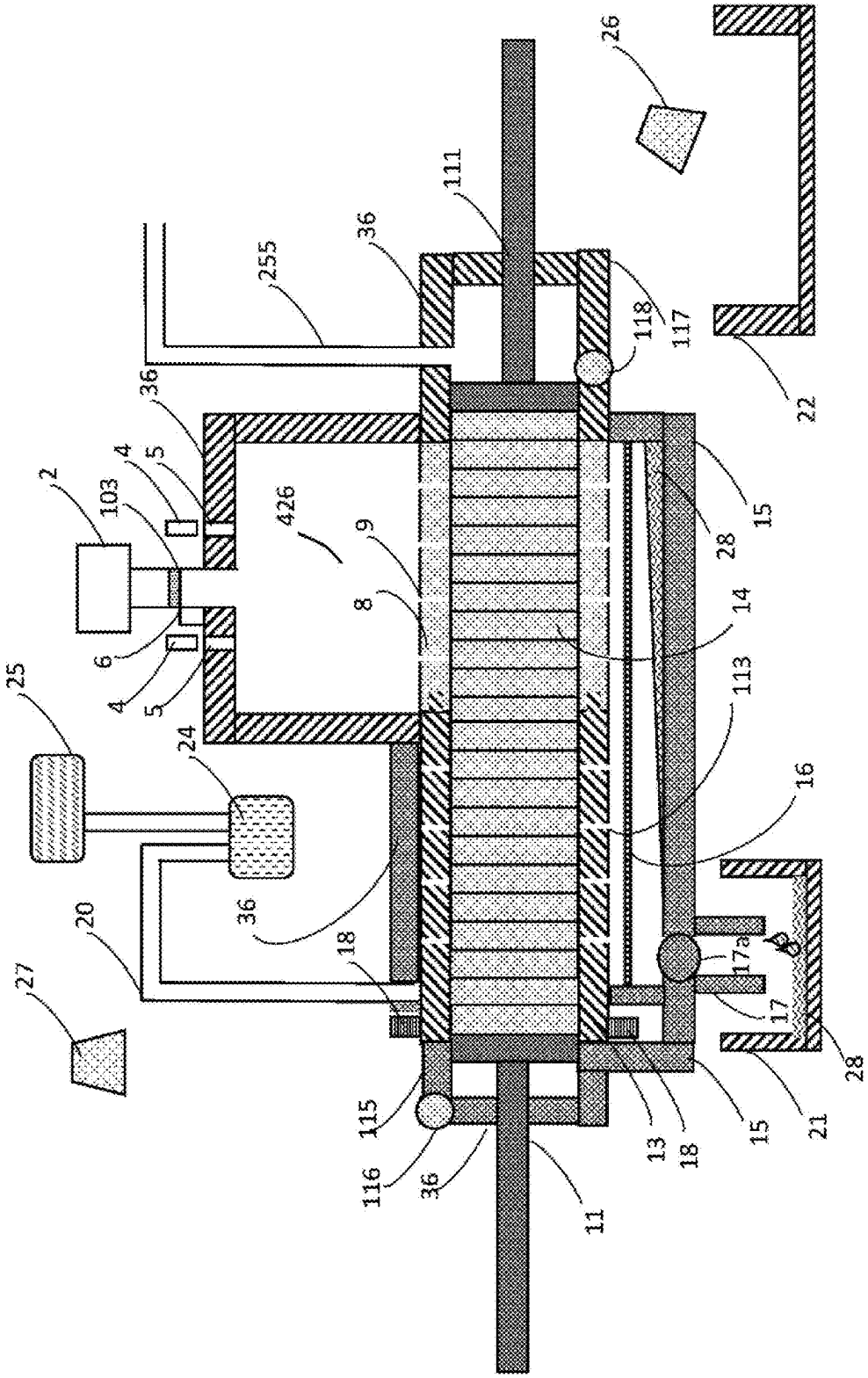
2
103
4
5
6
4
5
36
36
255
111
26
118
117
22
15
28
426
9
8
14
113
16
25
24
36
20
27
18
17a
17
28
21
15
18
13
115
116
36
11

Fig. 8

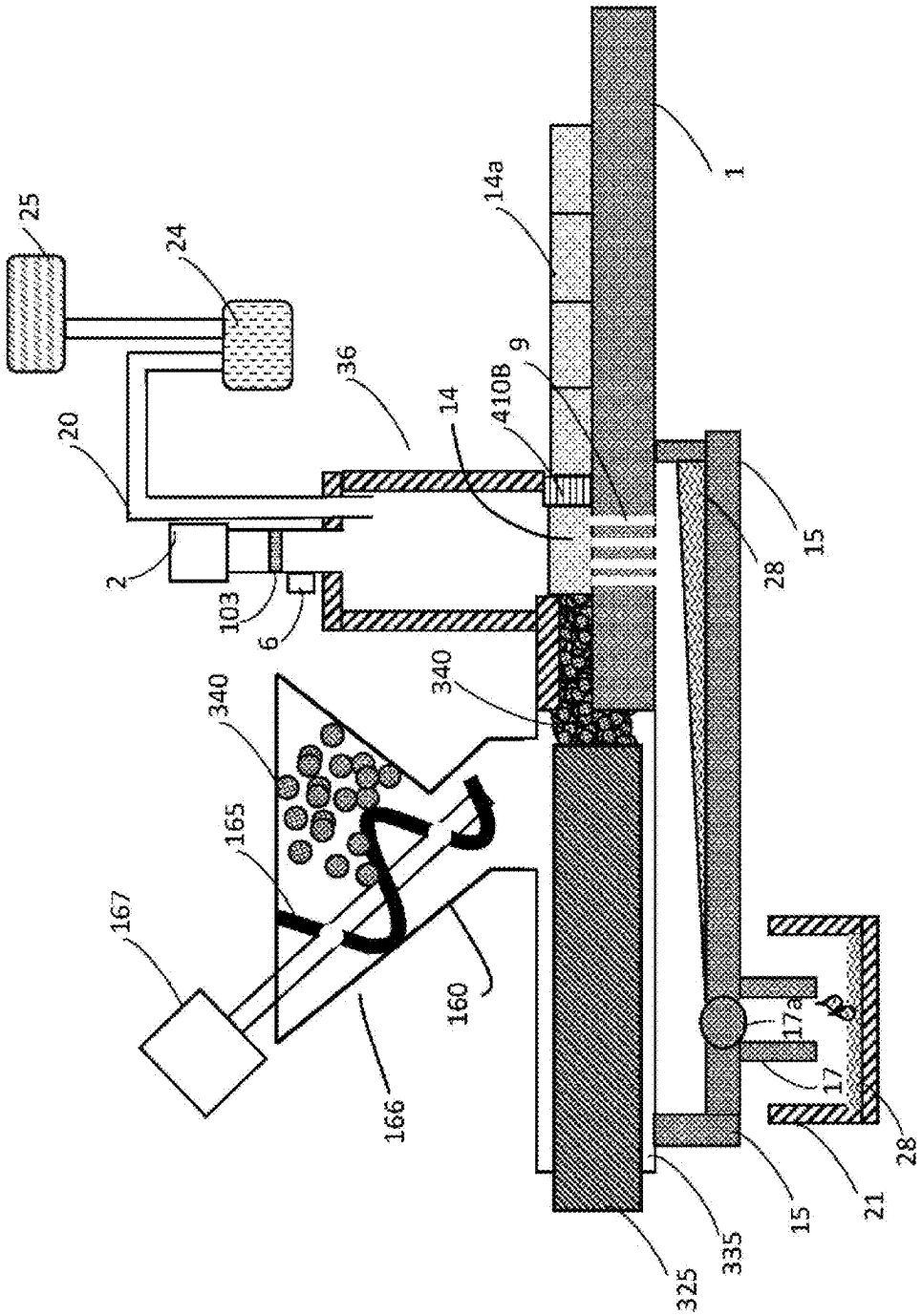
25
24
20
2
103
6
36
14
410B
9
14a
1
15
28
340
340
165
167
160
166
17a
17
28
21
15
335
325

Fig. 9

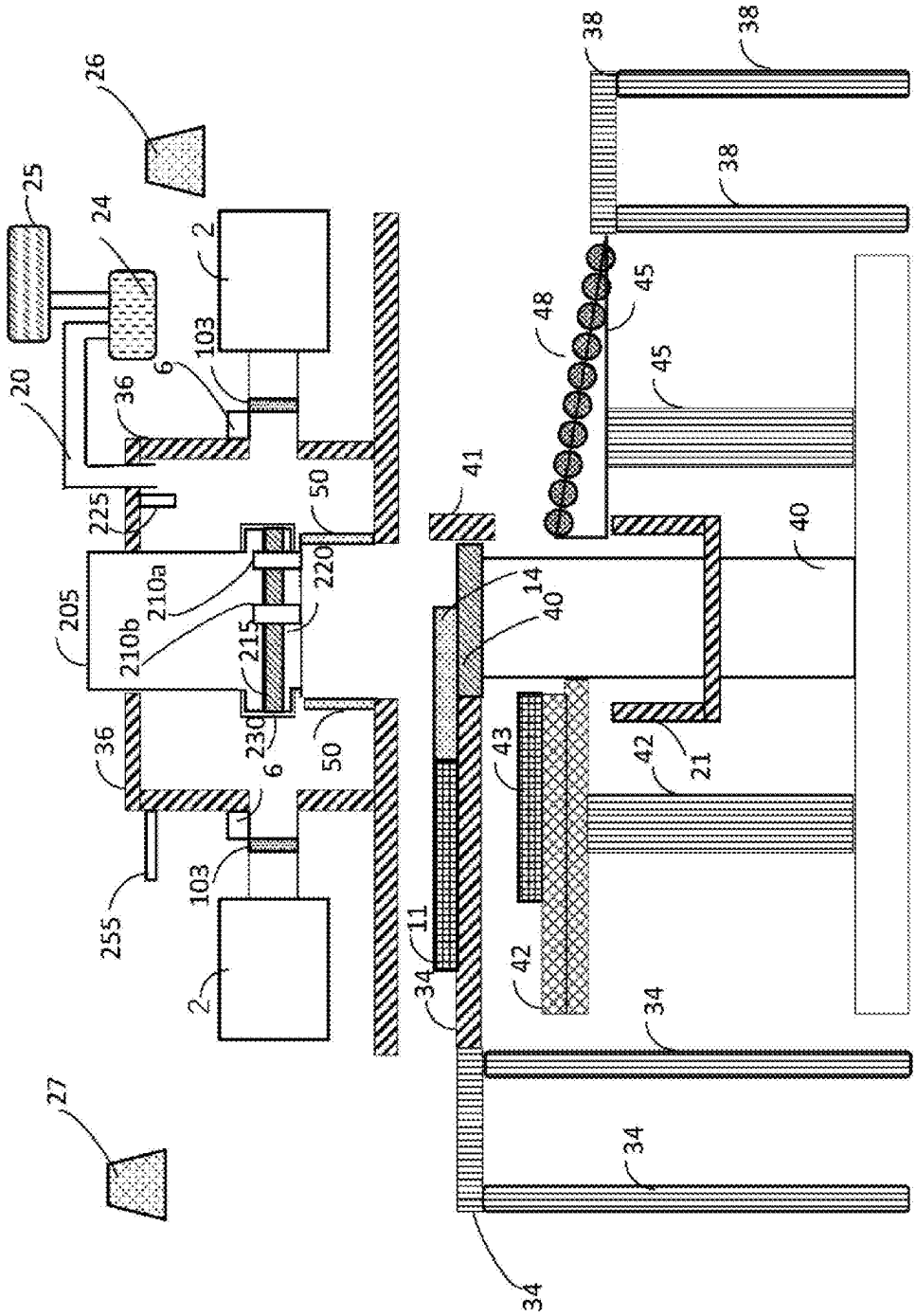
26
25
24
2
103
6
20
36
225
205
210a
210b
215
220
230
50
255
27
41
14
40
11
34
43
42
21
45
48
38

Fig. 10

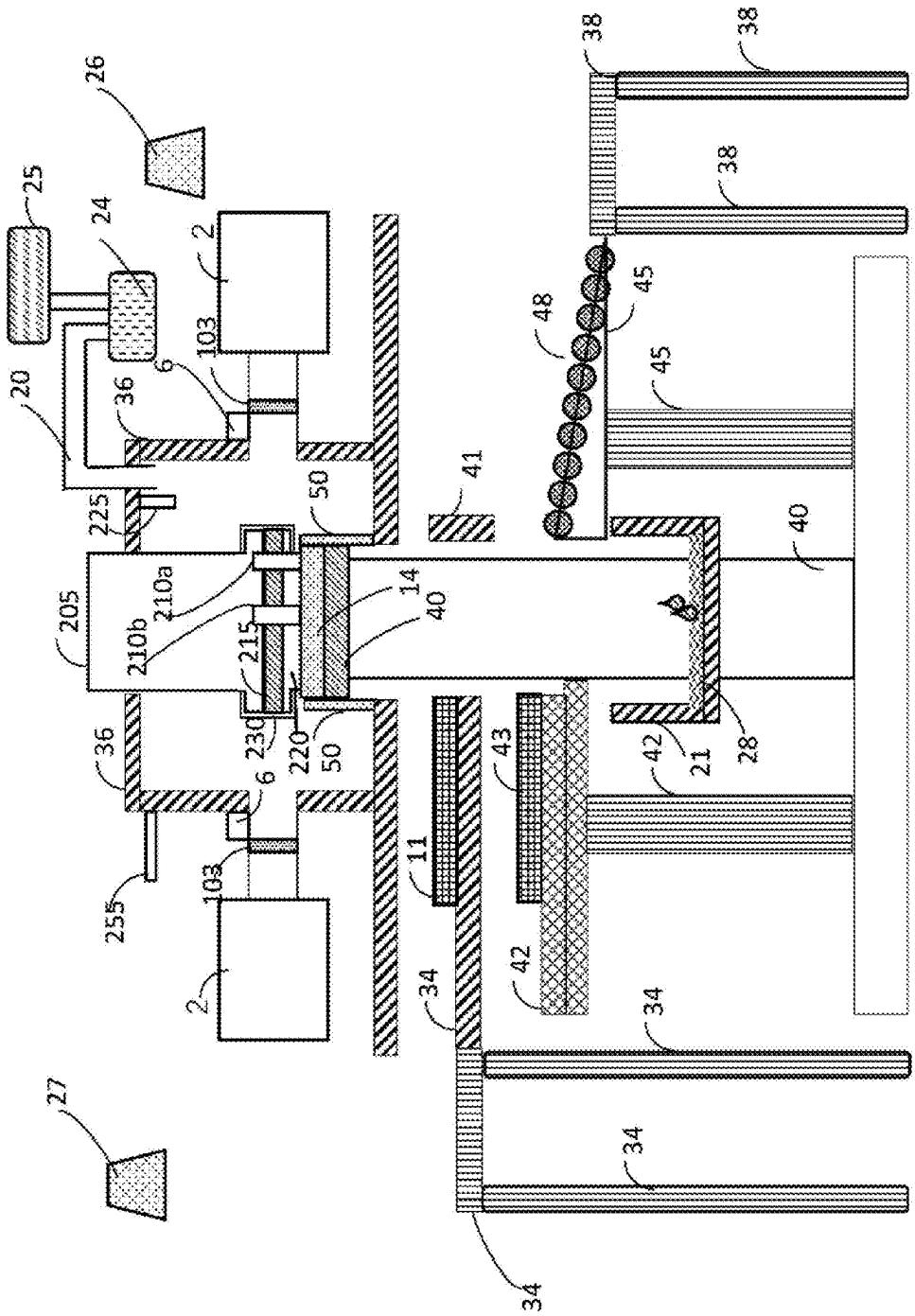
26
25
24
2
103
6
20
36
225
205
210a
210b
215
230
220
50
14
40
41
48
45
38
38
38
40
28
21
42
43
11
34
34
34
34
27
255
103
6
36
2

Fig. 11

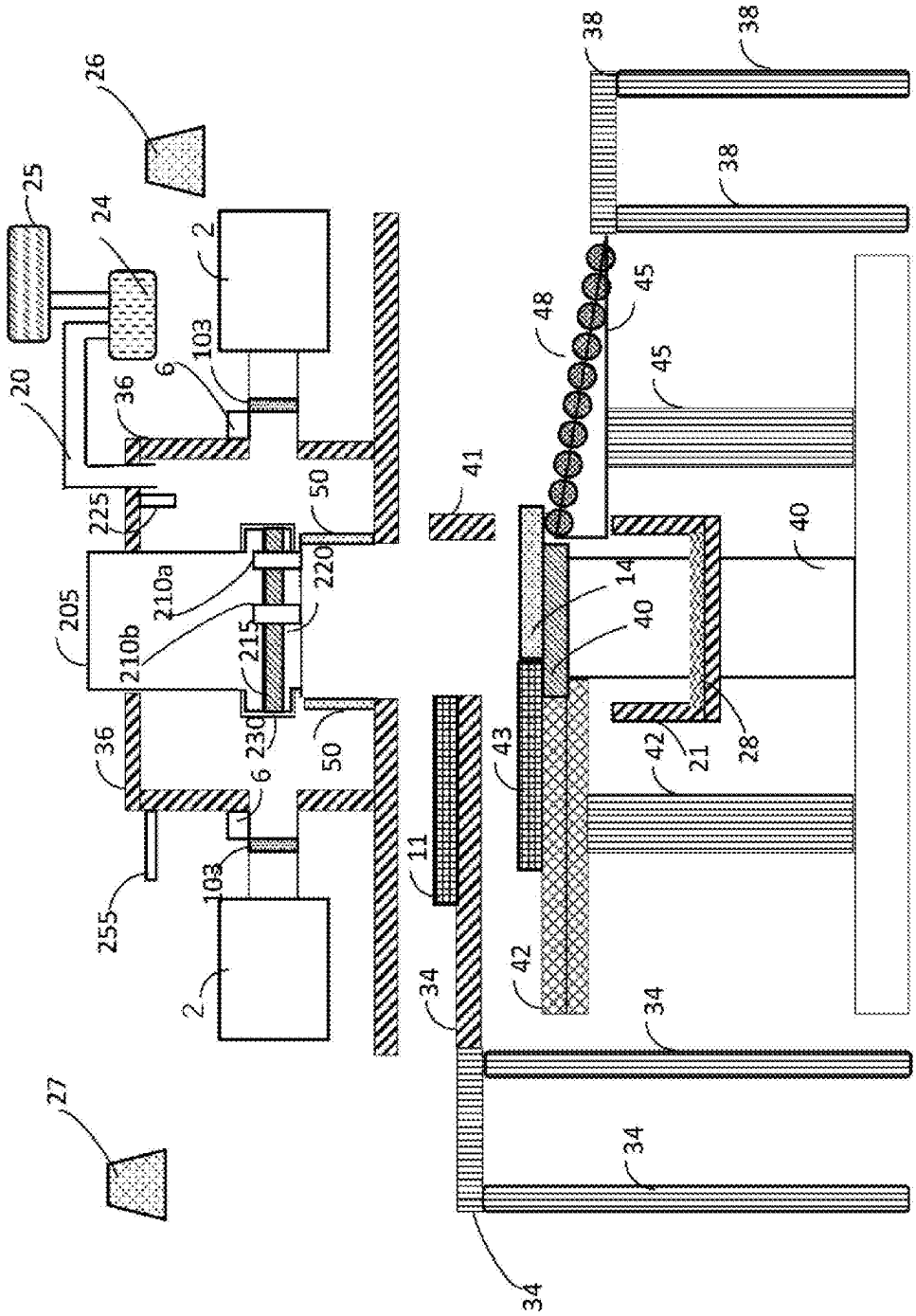
26
25
24
2
103
6
20
36
225
205
210a
210b
215
220
230
50
41
38
38
45
48
45
40
14
40
28
21
42
43
11
34
42
34
34
34
27
255
103
6
36
2

Fig. 12

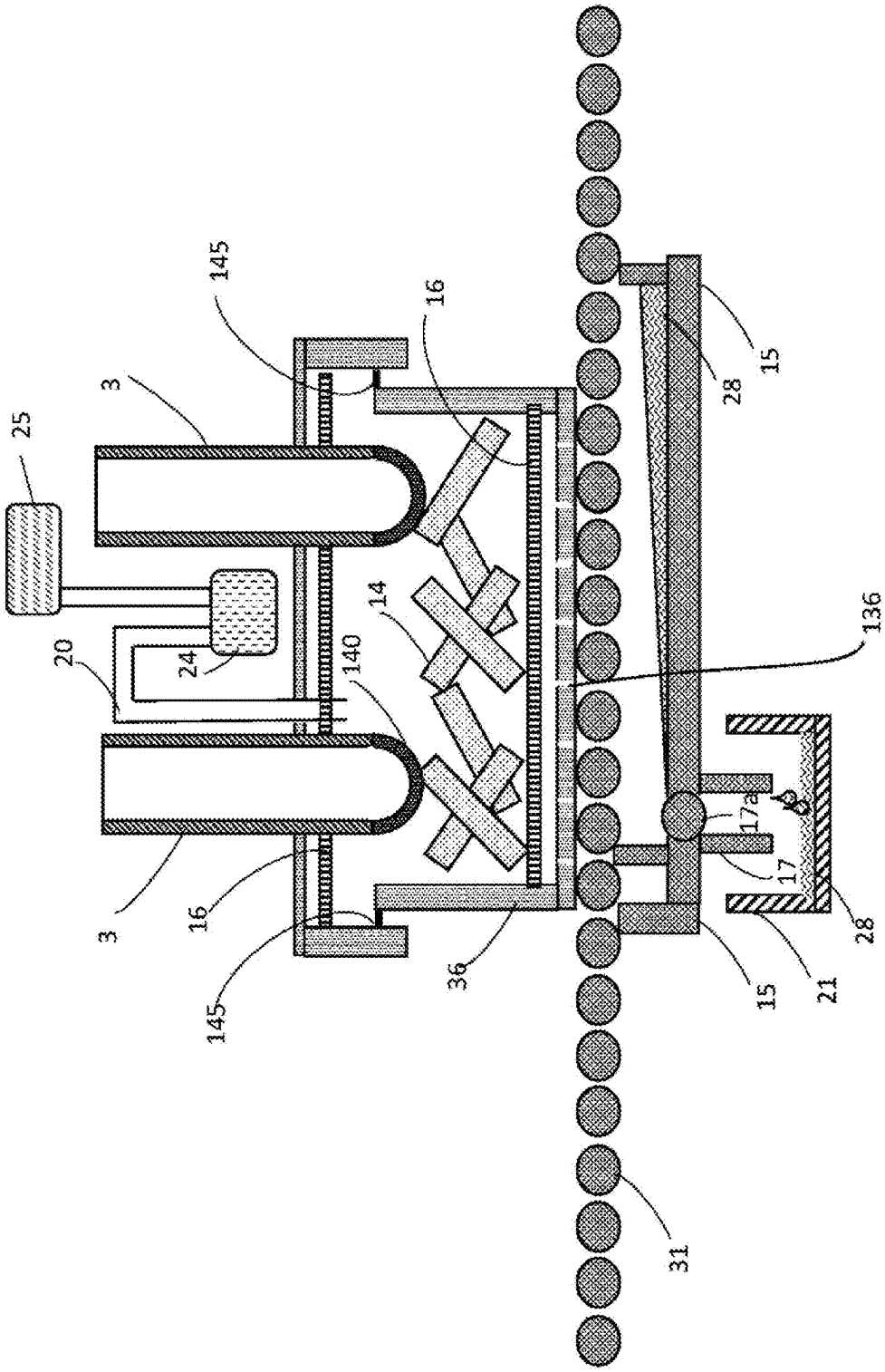

HEATING DEVICE

BACKGROUND

Field

[0001] Some aspects of the present disclosure relate to a heating device.

Description of the Related Art

[0002] When heating a heating target, there are cases that the heating target is irradiated with microwaves.

CITATION LIST

Patent Literature

[0003] [Patent Literature 1] Japanese Patent Laid-Open No. 2012-158790

[0004] [Patent Literature 2] Japanese Patent Laid-Open No. 2017-145151

[0005] [Patent Literature 3] Japanese Patent Laid-Open No. 2009-035776

[0006] [Patent Literature 4] Japanese Patent Laid-Open No. 2013-216943

[0007] [Patent Literature 5] Japanese Patent Laid-Open No. 2017-145151

[0008] [Patent Literature 6] International Publication No. WO 2022/195989

[0009] [Patent Literature 7] International Publication No. WO 2022/196681

[0010] An object of some aspects of the present disclosure is to provide a heating device that is capable of increasing heating efficiency of a heating target by microwave irradiation.

SUMMARY

[0011] A heating device according to an embodiment includes a microwave irradiator configured to irradiate a heating target with microwaves, and a collector configured to collect fluid generated from the heating target that is irradiated with the microwaves.

[0012] In relation to the heating device described above, the heating target may be metal.

[0013] In relation to the heating device described above, the fluid may be liquid, and the collector may include a liquid collector configured to collect the liquid.

[0014] In relation to the heating device described above, the liquid collector may be disposed on a lower side than the heating target in a direction of gravity.

[0015] In relation to the heating device described above, the liquid collector may include a drain pan configured to receive the liquid.

[0016] In relation to the heating device described above, the liquid collector may further include a drain pipe that is connected to the drain pan and through which the liquid flows.

[0017] In relation to the heating device described above, the liquid collector may further include a tank that is connected to the drain pipe and that stores the liquid.

[0018] In relation to the heating device described above, the fluid may be gas, and the collector may include a gas collector configured to collect the gas.

[0019] In relation to the heating device described above, the gas collector may include a gas collection pipe that is connected to an irradiation chamber where the heating target to be irradiated with the microwaves is disposed.

[0020] In relation to the heating device described above, the gas collector may include a liquefier configured to liquefy the gas that is collected. The liquefier may cool and liquefy the gas that is collected.

[0021] The heating device described above may further include a holding member configured to hold the heating target, the holding member including an opening for allowing the fluid to pass through to the collector.

[0022] In relation to the heating device described above, the holding member may be rotatable.

[0023] In relation to the heating device described above, the holding member may move parallelly.

[0024] In relation to the heating device described above, the holding member may be a stage, and the heating target may be disposed on the stage.

[0025] In relation to the heating device described above, the holding member may have a hollow shape, and the heating target may be disposed inside the holding member.

[0026] In relation to the heating device described above, the holding member having a hollow shape may be rotatable.

[0027] The heating device described above may further include a transporter configured to transport the heating target relative to the microwave irradiator.

[0028] In relation to the heating device described above, the transporter may include a pusher configured to push the heating target.

[0029] In relation to the heating device described above, the transporter may include a roller conveyor.

[0030] The heating device described above may further include an irradiation chamber where the heating target to be irradiated with the microwaves is disposed, and a pre-heating chamber connected to the irradiation chamber, and the heating target before irradiation with the microwaves may be disposed in the pre-heating chamber.

[0031] The heating device described above may further include a gaseous environment conditioner configured to equalize a gaseous environment inside the irradiation chamber and a gaseous environment inside the pre-heating chamber.

[0032] The heating device described above may further include an irradiation chamber where the heating target to be irradiated with the microwaves is disposed, and a post-heating chamber connected to the irradiation chamber, and the heating target after irradiation with the microwaves may be disposed in the post-heating chamber.

[0033] The heating device described above may further include a gaseous environment conditioner configured to equalize a gaseous environment inside the irradiation chamber and a gaseous environment inside the post-heating chamber.

[0034] The heating device described above may further include a supplier configured to supply the heating target before irradiation with the microwaves to a microwave irradiation region.

[0035] In relation to the heating device described above, the fluid may be at least one of oil and water.

Advantageous Effect

[0036] According to the present disclosure, it is possible to provide a heating device that is capable of increasing heating efficiency of a heating target by microwave irradiation.

BRIEF DESCRIPTION OF THE DRAWINGS

[0037] FIG. **1** is a schematic diagram of a heating device according to an embodiment;

[0038] FIG. **2** is a schematic diagram of the heating device according to the embodiment;

[0039] FIG. **3** is a schematic diagram of the heating device according to the embodiment;

[0040] FIG. **4** is a schematic diagram of the heating device according to the embodiment;

[0041] FIG. **5** is a schematic diagram of the heating device according to the embodiment;

[0042] FIG. **6** is a schematic diagram of the heating device according to the embodiment;

[0043] FIG. **7** is a schematic diagram of the heating device according to the embodiment;

[0044] FIG. **8** is a schematic diagram of the heating device according to the embodiment;

[0045] FIG. **9** is a schematic diagram of the heating device according to the embodiment;

[0046] FIG. **10** is a schematic diagram of the heating device according to the embodiment;

[0047] FIG. **11** is a schematic diagram of the heating device according to the embodiment; and

[0048] FIG. **12** is a schematic diagram of the heating device according to the embodiment.

DETAILED DESCRIPTION

[0049] In the following, embodiments of the present invention will be described with reference to the drawings. It should be noted that the drawings are schematic. Accordingly, specific dimensions and the like should be determined in view of the description below. Furthermore, the dimensional relationship and proportion may differ among the drawings.

[0050] As shown in FIG. **1**, a heating device according to the embodiment includes a microwave irradiator **3** configured to irradiate a heating target **14** with microwaves, and a collector **105** configured to collect fluid generated from the heating target **14** that is irradiated with microwaves. Microwaves are electromagnetic waves with a frequency of 300 MHz to 30 GHz, for example.

[0051] The heating target **14** includes metal, for example. The heating target **14** includes ceramic, for example. Furthermore, the heating target **14** includes non-metal such as oil, organic compound, and water, for example. In the present disclosure, oil includes emulsion. When the heating target **14** is irradiated with microwaves, the heating target **14** is heated, and non-metal with lower melting point and boiling point than metal and ceramic becomes fluid and is separated from the heating target. The heating target **14** may be reduced due to being irradiated with microwaves. The heating target **14** may be sintered or melted and solidified due to being irradiated with microwaves.

[0052] Fluid that is generated from the heating target **14** includes liquid and gas. The collector **105** may include a liquid collector **106** configured to collect the liquid. Examples of the liquid include water, oil, and organic compound. The collector **105** may include a gas collector **107** configured to collect the gas. Examples of the gas include vaporized water, vaporized oil, and vaporized organic compound.

[0053] Oil may be water soluble or insoluble. Oil may include at least one of surfactant, rust preventive, and preservative. Oil may be mixed with water to form emulsion. Examples of oil include cutting oil and release agent. Examples of cutting oil include mineral oil, animal and plant oil and fat, and synthetic oil, and a mixture thereof.

[0054] Furthermore, oil may be rolling oil, extrusion oil used for extrusion processing, drawing oil used for drawing processing, pressing oil used for pressing processing, forging oil used for forging processing, hydraulic oil leaking from a processing machine at the time of metal processing or cutting, or oil, such as cooling oil, rust preventive oil or lubricating oil, attached to the heating target **14** from a machine processing the heating target **14**.

[0055] Examples of organic compound include surfactant and silicone oil.

[0056] As shown in FIG. **2**, the liquid collector **106** is disposed on a lower side in a direction of gravity than the heating target **14** at a time of microwave irradiation. The liquid collector **106** may include a drain pan **15** for receiving liquid separated from the heating target **14**, a drain pipe **17** that is connected to the drain pan **15** and through which liquid flows, and a tank **21** that is connected to the drain pipe **17** and that stores liquid **28**. A valve **17***a* may be provided between the drain pan **15** and the drain pipe **17**. The valve **17***a* prevents outside air from entering an irradiation chamber **36** described later.

[0057] The heating device according to the embodiment may further include a holding member **425** for holding the heating target **14** at a time of microwave irradiation. The holding member **425** is a stage, for example, and the heating target **14** is disposed on the stage. An opening is formed in the holding member **425**, the opening being for allowing liquid, for example, separated from the heating target **14** that is irradiated with microwaves and heated to pass through to the liquid collector **106**. There may be one or more openings.

[0058] Liquid that is separated from the heating target **14** that is irradiated with microwaves and heated falls into the drain pan **15** through the opening in the holding member **425**. The liquid accumulated in the drain pan **15** is transferred to the tank **21** through the drain pipe **17**.

[0059] The heating device according to the embodiment may further include the irradiation chamber **36** inside which the heating target **14** to be irradiated with microwaves is to be disposed. The microwave irradiator **3** irradiates the heating target **14** that is disposed inside the irradiation chamber **36** with microwaves. For example, it is possible to seal inside of the irradiation chamber **36** from outside at a time of radiation of microwaves by the microwave irradiator **3**. A bottom portion of the irradiation chamber **36** may form the drain pan **15**.

[0060] For example, the irradiation chamber **36** is provided with a carry-in door **410**A for allowing the heating target **14** to enter the irradiation chamber **36**, and a carry-out door **410**B for allowing the heating target **14** to leave the irradiation chamber **36**.

[0061] The gas collector **107** may include a gas collection pipe **20** connected to the irradiation chamber **36**, a suction pump **24** for suctioning gas inside the irradiation chamber **36** into the gas collection pipe **20**, and a liquefier **25** for liquefying collected gas. Gas separated from the heating target **14** that is irradiated with microwaves and heated is collected from the irradiation chamber **36** by the suction pump **24** through the gas collection pipe **20** and is transferred to the liquefier **25**. The liquefier **25** cools the collected gas to liquefy the gas, for example.

[0062] The heating target **14** may include a simple metal or a metal compound such as an alloy. Examples of metal include iron (Fe), nickel (Ni), copper (Cu), gold (Au), silver (Ag), aluminum (Al), cobalt (Co), tungsten (W), titanium (Ti), chromium (Cr), molybdenum (Mo), beryllium (Be), magnesium (Mg), tin (Sn), cerium (Ce), lead (Pb), mercury (Hg), sodium (Na), bismuth (Bi), and gallium (Ga).

[0063] The sintering temperature of iron (Fe) is 1200° C., for example. The melting point of iron (Fe) is 1538° C. The sintering temperature of nickel (Ni) is 1200° C., for example. The melting point of nickel (Ni) is 1495° C. The sintering temperature of copper (Cu) is 800° C., for example. The melting point of copper (Cu) is 1085° C. The sintering temperature of gold (Au) is 800° C., for example. The melting point of gold (Au) is 1064° C. The sintering temperature of silver (Ag) is 750° C., for example. The melting point of silver (Ag) is 962° C. The sintering temperature of aluminum (Al) is 500° C., for example. The melting point of aluminum (Al) is 660° C. The sintering temperature of cobalt (Co) is 1100° C., for example. The melting point of cobalt (Co) is 1455° C.

[0064] The heating target **14** may include one species of metal, or a plurality of species of metal. Examples of metal compound include, but are not limited to, an alloy composed of a plurality of metal elements, an alloy composed of a metal element and a non-metal element, an oxide of metal, a hydroxide of metal, a chloride of metal, a carbide of metal, a boride of metal, and a sulfide of metal. Metal raw material may include, as alloy components, silicon (Si), manganese (Mn), chromium (Cr), nickel (Ni), carbon (C), boron (B), copper (Cu), aluminum (Al), titanium (Ti), niobium (Nb), vanadium (V), zinc (Zn), antimony (Sb), palladium (Pd), lanthanum (La), gold (Au), potassium (K), cadmium (Cd), indium (In), molybdenum (Mo), sulfur(S), and the like.

[0065] The heating target **14** is not particularly limited in terms of shape and size. The heating target **14** may be solid or powder. The heating target **14** may be plate-shaped or sheet-shaped. The heating target **14** may include a green compact of metal powder. The heating target **14** may include a metal fragment. The heating target **14** may be a briquette.

[0066] In the case where the heating target **14** is a molded body formed from a metal material, pressure of 1 MPa or more, 100 MPa or more or 200 MPa or more, and 2000 MPa or less, 1900 MPa or less or 1800 MPa or less, for example, may be applied to metal raw material at the time of molding the metal raw material into the molded body. By applying the pressure, a metallic solid that is made by heating the heating target **14** and sintering or melting and solidifying the metal tends to be dense. As a pressurization method, uniaxial molding, cold isostatic pressing (CIP) molding, hot isostatic pressing (HIP) molding, and roller pressurization can be raised.

[0067] The holding member **425** may include a heating promoter for promoting heating of the heating target **14** that is irradiated with microwaves.

[0068] The heating promoter may include an absorbent material that absorbs microwaves in a temperature zone at least a part of which is lower than a temperature zone in which metal raw material of the heating target **14** absorbs microwaves. The absorbent material has a higher melting point than the metal raw material. At least a part of the temperature zone in which the absorbent material absorbs microwaves is lower than the temperature zone in which the metal raw material absorbs microwaves. The temperature zone in which the metal raw material absorbs microwaves is 300° C. or more and 1200° C. or less, 450° C. or more and 1100° C. or less, or 600° C. or more and 800° C. or less, for example. The temperature zone in which the absorbent material absorbs microwaves is 25° C. or more and 1000° C. or less, 50° C. or more and 1000° C. or less, 75° C. or more and 1000° C. or less, 100° C. or more and 1000° C. or less, 250° C. or more and 900° C. or less, or 400° C. or more and 600° C. or less, for example.

[0069] At least a part of the temperature zone in which the absorbent material absorbs microwaves preferably overlaps the temperature zone in which the metal raw material absorbs microwaves. The absorbent material generates heat earlier than the metal raw material because the absorbent material absorbs microwaves in the temperature zone at least a part of which is lower than the temperature zone in which the metal raw material absorbs microwaves. Accordingly, the absorbent material can heat the metal raw material before the temperature zone in which the metal raw material absorbs microwaves is reached.

[0070] Accordingly, when the heating promoter includes the absorbent material, the temperature of the metal raw material fast reaches the temperature zone in which microwaves are absorbed, and a heating time of the metal raw material can be shorten. Moreover, because the absorbent material absorbs microwaves in the temperature zone at least a part of which is lower than the temperature zone in which the metal raw material absorbs microwaves, the heating promoter can be prevented from being heated more than necessary. Accordingly, even while the metal raw material irradiated with microwaves is being sintered or melted, the heating promoter including the absorbent material may remain stable in shape.

[0071] The absorbent material includes a carbon material, for example. Examples of carbon material include, but are not limited to, carbon black, amorphous carbon, graphite, silicon carbide, carbon resin, and metal carbide. The absorbent material may include metal raw material, metal nitride, metal oxide, metal boride and the like that absorb microwaves in a temperature zone at least a part of which is lower than the temperature zone in which the metal raw material of the heating target absorbs microwaves. The absorbent material may be a compound thereof. The absorbent material preferably does not contain volatile components. When the absorbent material does not contain volatile components, absorption of microwaves by volatile components can be prevented.

[0072] The heating promoter may include a heat insulation material having a higher microwave transmittance than metal raw material and a lower level of microwave absorption than metal raw material. The heat insulation material has a higher melting point than metal raw material. Because the heat insulation material has a low level of microwave absorption, the level of heat generation is low even at a time of microwave irradiation, and the heat insulation material achieves insulation effect. Furthermore, because the heat insulation material has a higher melting point than metal raw material, the shape is stable even at a time of microwave irradiation. Accordingly, even while metal raw material irradiated with microwaves is being sintered or melted, the heating promoter including the heat insulation material may remain stable in shape.

[0073] The heat insulation material may include an oxide of metal, or may include an oxide of metalloid. Examples of

oxides of metal and metalloid include, but are not limited to, aluminum oxide (Al_2O_3), silicon dioxide (SiO_2), magnesium oxide (MgO), zirconium oxide (ZrO_2), and titanium dioxide (TiO_2). For example, the melting point of aluminum oxide (Al_2O_3) is 2072° C. The melting point of silicon dioxide (SiO_2) is 1710° C. The melting point of magnesium oxide (MgO) is 2852° C. The heat insulation material may be a compound thereof.

[0074] The heating promoter may include a reducing material for reducing metal raw material. The reducing material has a higher melting point than the metal raw material. Examples of reducing material include carbon and silicon carbide. The carbon material that is used as the absorbent material may also function as the reducing material.

[0075] The heating promoter may be composed only of the heat insulation material, or only of the absorbent material, or only of the reducing material, or may include a mixture of the heat insulation material and the absorbent material, or may include a mixture of the absorbent material and the reducing material, or may include a mixture of the reducing material and the heat insulation material, or may include a mixture of the heat insulation material, the absorbent material and the reducing material. Properties and functions may overlap among the heat insulation material, the absorbent material, and the reducing material. For example, the carbon material may function as the absorbent material, and may also function as the reducing material.

[0076] As shown in FIG. **3**, at the time of irradiation with microwaves on the heating target **14**, a contact member **420** including the heating promoter may be brought into contact with the heating target **14**. For example, the contact member **420** contacts an upper surface of the heating target **14**. The contact member **420** may be movable in the direction of gravity. The contact member **420** may include the heating promoter. By sandwiching the heating target **14** between the holding member **425** including the heating promoter and the contact member **420** including the heating promoter, heating of the heating target **14** can be promoted.

[0077] To uniformly heat the heating target **14**, the heating target **14** may be rotated relative to the microwave irradiator **3**. For example, the heating device according to the embodiment further includes a rotation table **440** for rotating the heating target **14** that is placed on the holding member **425**. A shaft **430** is connected to the rotation table **440**, and the rotation table **440** is rotatable around the shaft **430**. A longitudinal direction of the shaft **430** is parallel to a radiation window of the microwave irradiator **3**, and is perpendicular to a major travel direction of microwaves radiated by the microwave irradiator **3**, for example.

[0078] At the time of rotation of the heating target **14** by the rotation table **440**, the contact member **420** that is in contact with the upper surface of the heating target **14** may be rotated. The contact member **420** may passively rotate according to rotation of the heating target **14**. A shaft **435** may be connected to the contact member **420**. An opening may be provided at a center of the contact member **420**, and the shaft **435** may be inserted in the opening. A sleeve **431** for inserting the shaft **435** may be provided in the irradiation chamber **36**. Longitudinal directions of the shaft **435** and the sleeve **431** are parallel to the shaft **430**, and a center of the shaft **430** and a center of the shaft **435** are on a same line. The contact member **420** is rotatable around the shaft **435**.

[0079] In the case where the heating target **14** includes metal oxide, the metal oxide is reduced when the heating target **14** is irradiated with microwaves. In the case where the heating target **14** includes metal, a dense sintered body may be easily obtained by heating the heating target **14** to a sintering temperature or more and to near the melting point. Accordingly, the heating target **14** may be heated by microwaves to 1400° C. or more, or to 1500° C. or more. In the case of melting and solidifying the heating target **14**, the heating target **14** may be heated to the melting point or more.

[0080] When the heating target **14** is heated, a component included in the heating target **14** may be liquefied and vaporized, and liquid and gas may be generated from the heating target **14**. When liquid and gas generated from the heating target **14** continue to be present in the irradiation chamber **36**, the liquid and the gas may attach to the heating target **14** and an inner wall of the irradiation chamber **36**. Moreover, when irradiation with microwaves is ended and temperature inside the irradiation chamber **36** is reduced, the liquid and the gas attached to the heating target **14** and the inner wall of the irradiation chamber **36** may be solidified.

[0081] The liquid and the gas generated from the heating target **14** may be impurities. Accordingly, it is not desirable for the liquid and the gas generated from the heating target **14** to get reattached to the heating target **14**. Furthermore, it is not desirable for the liquid and the gas generated from the heating target **14** to get attached to a microwave transparent window of the microwave irradiator **3**, because this will reduce microwave radiation efficiency. Moreover, in the case where a measurement device such as a thermometer is provided inside the irradiation chamber **36**, attachment of the liquid and the gas generated from the heating target **14** to the measurement device may cause measurement accuracy of the measurement device to be reduced, and thus, such attachment is not desirable.

[0082] Furthermore, in the case where the heating target **14** before heating includes oil, heating of the oil may generate poisonous gas such as benzene and toluene.

[0083] However, the heating device according to the embodiment includes the collector configured to collect fluid generated from the heating target **14** that is irradiated with microwaves, and thus, liquid and gas generated from the heating target **14** can be prevented from being attached to the heating target **14**, the inner wall of the irradiation chamber **36**, the microwave transparent window, and the measurement device. Furthermore, poisonous gas can be prevented from being spread around the heating device.

[0084] The heating device according to the embodiment may further include a pre-heating chamber **400** that is connected to the irradiation chamber **36**. The heating target **14** before irradiation with microwaves is disposed in the pre-heating chamber **400**. The pre-heating chamber **400** is provided with a carry-in door, not shown, for allowing the heating target **14** to be carried in from outside. A carry-in door **410**A is disposed between the pre-heating chamber **400** and the irradiation chamber **36**, and the carry-in door **410**A is opened at the time of moving the heating target **14** from the pre-heating chamber **400** to the irradiation chamber **36**.

[0085] The pre-heating chamber **400** may function as a load lock chamber. For example, the heating device may include a gaseous environment conditioner for equalizing a gaseous environment inside the irradiation chamber **36** and a gaseous environment inside the pre-heating chamber **400**. For example, the irradiation chamber **36** is provided with a

gas introduction pipe **255** and a gas discharge pipe **260**, and the pre-heating chamber **400** is provided with a gas introduction pipe **256** and a gas discharge pipe **261**.

[0086] By discharging gas inside the irradiation chamber **36** from the gas discharge pipe **260** and introducing gas of a desired composition into the irradiation chamber **36** from the gas introduction pipe **255** in a state where the irradiation chamber **36** is sealed, a desired gas condition can be set inside the irradiation chamber **36**. Furthermore, by discharging gas inside the pre-heating chamber **400** from the gas discharge pipe **261** and introducing gas of a desired composition into the pre-heating chamber **400** from the gas introduction pipe **256** in a state where the pre-heating chamber **400** is sealed, a desired condition can be set with respect to gas inside the pre-heating chamber **400**.

[0087] Gas to be introduced into the pre-heating chamber **400** and the irradiation chamber **36** may be an inert gas. Examples of inert gas include argon (Ar) and helium (He). Gas to be introduced into the pre-heating chamber **400** and the irradiation chamber **36** may be a neutral gas. Examples of neutral gas include nitrogen (N_2), dry hydrogen (H_2), and ammonia (NH_3). Gas to be introduced into the pre-heating chamber **400** and the irradiation chamber **36** may be a reducing gas. Examples of reducing gas include hydrogen (H_2), carbon monoxide (CO), and hydrocarbon gas (CH_4, C_3H_8, C_4H_{10}, etc.).

[0088] After the heating target **14** is placed inside the pre-heating chamber **400**, the pre-heating chamber **400** is sealed, and a gas condition inside the pre-heating chamber **400** is made the same as the gas condition inside the irradiation chamber **36**. Then, the carry-in door **410**A between the pre-heating chamber **400** and the irradiation chamber **36** is opened, the heating target **14** is moved into the irradiation chamber **36**, and the carry-in door **410**A is closed, and entry of outside air into the irradiation chamber **36** can thus be prevented.

[0089] A bottom surface of the pre-heating chamber **400** and a bottom surface of the irradiation chamber **36** may form a continuous stage **1**. The heating device according to the embodiment may further include a transporter for moving the heating target **14** from inside the pre-heating chamber **400** to inside the irradiation chamber **36**. The transporter may include a pusher **11** configured to push the heating target **14** from inside the pre-heating chamber **400** into the irradiation chamber **36**. The pusher **11** includes a rod, for example, and reciprocates between the pre-heating chamber **400** and the irradiation chamber **36**.

[0090] The heating device according to the embodiment may further include a post-heating chamber **401** that is connected to the irradiation chamber **36**. A heating target **14***a* after irradiation with microwaves is placed in the post-heating chamber **401**. The carry-out door **410**B is disposed between the irradiation chamber **36** and the post-heating chamber **401**, and the carry-out door **410**B is opened at the time of moving the heating target **14***a* from the irradiation chamber **36** to the post-heating chamber **401**. The post-heating chamber **401** is provided with a carry-out door **411** for allowing the heating target **14***a* to be carried out from inside to outside.

[0091] The post-heating chamber **401** may function as a load lock chamber. For example, the heating device may include a gaseous environment conditioner for equalizing the gaseous environment inside the irradiation chamber **36** and a gaseous environment inside the post-heating chamber **401**. For example, the post-heating chamber **401** is provided with a gas introduction pipe **257** and a gas discharge pipe **262**. By discharging gas inside the post-heating chamber **401** from the gas discharge pipe **262** and introducing gas of a desired composition into the post-heating chamber **401** from the gas introduction pipe **257** in a state where the post-heating chamber **401** is sealed, a desired condition can be set with respect to gas inside the post-heating chamber **401**.

[0092] Before transporting the heating target **14***a* from the irradiation chamber **36** to the post-heating chamber **401**, the post-heating chamber **401** is sealed, and a gas condition inside the post-heating chamber **401** is made the same as the gas condition inside the irradiation chamber **36**. Then, the carry-out door **410**B between the irradiation chamber **36** and the post-heating chamber **401** is opened, the heating target **14***a* is moved into the post-heating chamber **401**, the carry-out door **410**B is closed, and then, the carry-out door **411** of the post-heating chamber **401** is opened and the heating target **14***a* is carried out from the post-heating chamber **401**, and entry of outside air into the irradiation chamber **36** can thus be prevented.

[0093] The heating device according to the embodiment may further include a transporter for moving the heating target **14***a* from inside the post-heating chamber **401** to outside. The transporter may include a caterpillar conveyor **19** configured to carry out the heating target **14***a* from inside the post-heating chamber **401** to outside.

[0094] With the heating device according to the embodiment shown in FIG. **4**, the irradiation chamber **36** is provided with a carry-in port **412** and a carry-out port **413**. The heating device shown in FIG. **4** includes a transporter for the heating target **14**, the transporter penetrating the irradiation chamber **36** through the carry-in port **412** and the carry-out port **413**. For example, the transporter includes a roller conveyor **31** allowing the heating target **14** to flow on an upper surface, and a pusher **11** for pushing the heating target **14** on the roller conveyor **31**. A plurality of heating targets **14** may flow on the roller conveyor **31**, and the plurality of heating targets **14** may be successively irradiated with microwaves inside the irradiation chamber **36**.

[0095] The microwave irradiator **3** may be provided at any position in the irradiation chamber **36**. In the example shown in FIG. **4**, a microwave inlet is provided on a lower side in the direction of gravity than a disposed position of the heating target **14** inside the irradiation chamber **36**. For example, the microwave irradiator **3** may include a microwave generation unit **2** for generating microwaves, a microwave transparent window **103** for allowing transmittance of microwaves generated by the microwave generation unit **2**, and an air curtain supplier **6** for preventing a volatile matter inside the irradiation chamber **36** from being attached to a surface of the microwave transparent window **103**. For example, the microwave transparent window **103** is formed of quartz glass. The air curtain supplier **6** prevents attachment of a volatile matter to the microwave transparent window **103** by supplying an air curtain along the microwave transparent window **103**. The same can be applied to heating devices shown in other drawings.

[0096] Furthermore, the heating device may include a fan **130** for spreading microwaves inside the irradiation chamber **36**. When the fan **130** rotates and a surface of the fan **130** reflects microwaves, the microwaves are agitated, and positions of dead spots where intensity of microwaves is low that is generated due to interference between microwaves inside

the irradiation chamber **36** are changed over time. The heating target **14** can thereby be uniformly heated. The fan may be provided inside the irradiation chamber **36** also in the case of heating devices shown in other drawings.

[0097] The gas collector **107** may include an analysis device **155** for analyzing components of gas collected from inside the irradiation chamber **36**. For example, the analysis device **155** is connected to a pipe **150** that is branched from the gas collection pipe **20**. Examples of the analysis device **155** include a gas chromatograph (GC), a gas chromatograph-mass spectrometer (GC/MS), an infrared spectrometer, and a Fourier transform infrared spectrometer. The gas collector may include the analysis device also in the case of heating devices shown in other drawings.

[0098] A porous partition **16** may be disposed between a position inside the irradiation chamber **36** where the heating target **14** is disposed and the gas collector **107**. As an example of the porous partition **16**, a perforated metal can be cited. The porous partition **16** may be disposed between the position inside the irradiation chamber **36** where the heating target **14** is disposed and the liquid collector **106**.

[0099] In the case where the heating target **14***a* is metal, the heating target **14***a* heated by the heating device may be fed into a molten metal **29** in a melting furnace **22**. At least a part of metal included in the molten metal is desirably the same as at least a part of metal included in the heating target **14***a* that is heated. The molten metal **29** may be monitored by a camera **26**. For example, a metal casting may be produced by feeding molten metal obtained by melting the heating target **14***a* into a mold and solidifying the molten metal inside the mold.

[0100] For example, the heating target **14***a* that is heated by the heating device is reduced and does not include an oxidized film, and is thus suitable for being fed into molten metal. Furthermore, the heating target **14***a* that is heated by the heating device is suitable for being fed into molten metal because non-metal is liquefied or vaporized and removed. More specifically, gas, steam explosion, ignition, slag, and blister are less likely to occur when the heating target **14***a* after removal of oxide and non-metal is fed into molten metal. Furthermore, the heating target **14***a* after removal of oxide has a high wettability to molten metal, and is easily submerged in the molten metal. Heat is easily transferred to inside of the heating target **14***a* that is submerged in molten metal, and thus, melt rate is high.

[0101] Also in the case of heating devices shown in drawings other than FIG. **4**, the heating target that is heated may be fed into molten metal. Other structural elements of the heating device shown in FIG. **4** are the same as those of the heating device shown in FIGS. **2** and **3**, and description thereof will be omitted.

[0102] A method of transporting the heating target **14** is not particularly limited, and the heating target **14** may be transported directly by the transporter, or, as shown in FIG. **5**, the heating target **14** placed on a tray **30** may be transported by the transporter. An opening **32** may be provided in a bottom part of the tray **30** to allow fluid generated from the heating target **14** that is irradiated with microwaves to pass through. One heating target **14** may be placed on one tray **30**, or, as shown in FIG. **6**, a plurality of heating targets **14** may be placed on one tray **30**.

[0103] As shown in FIGS. **5** and **6**, the heating target **14** before transported into the irradiation chamber **36** may be monitored by a camera **27**. A window **5** for temperature observation may be provided in the irradiation chamber **36**, and temperature inside the irradiation chamber **36** may be measured from outside the irradiation chamber **36** by a non-contact thermometer **4**. The non-contact thermometer is a radiation thermometer, for example. A radiation thermometer measures a temperature of a measurement target based on emissivity of the measurement target. For example, the radiation thermometer is a fiber radiation thermometer. A temperature of the heating target that is irradiated with microwaves and carried out from the irradiation chamber **36** may be measured by a non-contact thermometer **200**. Other structural elements of the heating device shown in FIGS. **5** and **6** are the same as those of the heating device shown in FIGS. **2** and **3**, and description thereof will be omitted.

[0104] As shown in FIG. **7**, a holding member **426** for holding the heating target **14** may have a hollow shape. For example, the holding member **426** has a cylindrical shape. The holding member **426** may include a part **8** including a heating promoter, and a part **13** not including a heating promoter. For example, the part **8** of the holding member **426** including the heating promoter is disposed at a position that is irradiated with microwaves, and the part **13** of the holding member **426** not including the heating promoter is disposed at a position that is not irradiated with microwaves. The heating target **14** is disposed inside the holding member **426**. At least a part of the heating target **14** may be in contact with the part **8** of the holding member **426** including the heating promoter.

[0105] An opening **9** for allowing fluid generated from the heating target **14** to pass through to outside of the holding member **426** may be provided in the part **8** of the holding member **426** including the heating promoter. An opening **113** for allowing fluid generated from the heating target **14** to pass through to outside of the holding member **426** may be provided in the part **13** of the holding member **426** not including the heating promoter.

[0106] The holding member **426** having a hollow shape may be disposed inside the irradiation chamber **36** with a center axis perpendicular to the direction of gravity. The heating device may include a rotating device **18** for rotating the holding member **426** around the center axis of the holding member **426**. The heating target **14** inside the holding member **426** may, but does not have to, be rotated by a frictional force according to rotation of the holding member **426**. When the holding member **426** is irradiated with microwaves while the holding member **426** is being rotated, the holding member **426** is uniformly heated, and the heating target **14** inside the holding member **426** is also uniformly heated.

[0107] The heating target **14** is not particularly limited in terms of shape, but in the case where the holding member **426** has a cylindrical shape, the heating target **14** may have a disk-shape. For example, the heating target **14** may be disposed inside the holding member **426** with at least a part of an outer peripheral part of the disk-shaped heating target **14** in contact with an inner peripheral part of the holding member **426**.

[0108] The heating target **14** inside the holding member **426** having the hollow shape may be moved toward an opening on a carry-out side of the holding member **426** by being pushed by the pusher **11** from an opening on a carry-in side. The heating target **14** inside the holding member **426** may be supported by a supporter **111** from the opening on the carry-out side of the holding member **426** so that the

heating target **14** does not fall over. The pusher **11** and the supporter **111** move at a same speed while sandwiching the heating target **14**. A shaft of the pusher **11** and a shaft of the supporter **111** may penetrate openings provided in the irradiation chamber **36**.

[0109] The irradiation chamber **36** may be provided with a carry-in hatch **115**, and the heating target **14** may be carried into the irradiation chamber **36** from the carry-in hatch **115**. The heating device may include a driver **116** for opening/closing the carry-in hatch **115**. The heating target **14** that is carried into the irradiation chamber **36** is moved into the holding member **426** having the hollow shape by being pushed by the pusher **11**.

[0110] The irradiation chamber **36** may be provided with a carry-out hatch **117**, and the heating target **14** may be carried out of the irradiation chamber **36** from the carry-out hatch **117**. The heating device may include a driver **118** for opening/closing the carry-out hatch **117**. For example, the carry-out hatch **117** may be provided in a bottom part of the irradiation chamber **36**. The heating target **14** that is irradiated with microwaves is moved from inside the holding member **426** to above the carry-out hatch **117** by being pushed by the pusher **11**, and falls below the irradiation chamber **36** when the carry-out hatch **117** is opened. Other structural elements of the heating device shown in FIG. **7** are the same as those of the heating device shown in FIGS. **2** and **3**, and description thereof will be omitted.

[0111] As shown in FIG. **8**, the heating device may include a supplier **166**. The supplier **166** may be a feeder. Raw materials **340** of the heating target **14** supplied from the supplier **166** may be carried into the irradiation chamber **36** by a pusher **325**, and the raw materials **340** as the heating target **14** may be irradiated with microwaves. The pusher **325** may be held by a guide **335**. The opening **9** for allowing fluid generated from the heating target **14** to pass through may be provided in the stage **1** inside the irradiation chamber **36**.

[0112] As shown in FIGS. **9** to **11**, the heating target **14** may be carried in and out from a lower side of the irradiation chamber **36** in the direction of gravity. As shown in FIG. **9**, the heating device includes a carry-in stage **34** below the irradiation chamber **36**. The pusher **11** moves the heating target **14** on the carry-in stage **34** onto a movable stage **40**. The heating device may include a stopper **41** for preventing the heating target **14** from falling off the movable stage **40**.

[0113] The movable stage **40** is movable in a vertical direction. An opening for allowing fluid generated from the heating target **14** to pass through may be provided in the movable stage **40**. As shown in FIG. **10**, when the heating target **14** is placed, the movable stage **40** is raised, and the heating target **14** is carried into the irradiation chamber **36** through the opening in the bottom part of the irradiation chamber **36**. The heating device may include an enclosure **50** that surrounds a periphery of the heating target **14** that is disposed inside the irradiation chamber **36**. For example, the enclosure **50** includes a heating promoter. A reflection plate **225** for reflecting microwaves may be provided inside the irradiation chamber **36**.

[0114] The heating device may include a press **205** for applying pressure to the heating target **14** on the movable stage **40**. An insulation layer **215** and a heating promoting member **220** may be provided on a pressing surface of the press **205**. The heating promoting member **220** includes a heating promoter. For example, the insulation layer **215** is disposed between the pressing surface of the press **205** and the heating promoting member **220**. The heating promoting member **220** contacts the heating target **14** at the time when the press **205** applies pressure to the heating target **14**. The insulation layer **215** prevents transfer, to the press **205**, of heat from the heating promoting member **220** and the heating target **14** heated by microwaves. The insulation layer **215** and the heating promoting member **220** may be fixed to the press **205** by a jig **230**.

[0115] The heating device may irradiate the heating target **14** with microwaves while applying pressure to the heating target **14** by the press **205**. For example, the pressure that is applied to the heating target **14** is, but not limited to, 1 MPa or more, 100 MPa or more, or 200 MPa or more, and 2000 MPa or less, 1900 MPa or less, or 1800 MPa or less. When the heating target **14** is irradiated with microwaves while pressure being applied to the heating target **14**, the heating target **14** after heating tends to be dense. Moreover, the press **205** may apply pressure to the heating target **14** also after irradiation with microwaves on the heating target **14** is ended.

[0116] The temperature of the heating target **14** that is heated may be measured by thermometers **210***a*, **210***b* of the press **205**. As shown in FIG. **11**, after the heating target **14** is irradiated with microwaves, the movable stage **40** is lowered, and the heating target **14** is carried out of the irradiation chamber **36**. A pusher **43** pushes the heating target **14** on the lowered movable stage **40** onto a roller conveyor **48**. The pusher **43** may be disposed on a base **42**, and the roller conveyor **48** may be disposed on a base **45**. The heating target **14** after heating may be conveyed onto another conveyor **38** via the roller conveyor **48**, for example.

[0117] As shown in FIG. **12**, the irradiation chamber **36** may be portable. The microwave irradiator **3** may irradiate the heating target **14** inside the irradiation chamber **36** that is being moved by the roller conveyor **31** with microwaves, and fluid generated from the heating target **14** may be discharged to outside the irradiation chamber **36** through the opening provided in the bottom part of the irradiation chamber **36**. A heating promoting member **140** including a heating promoter may be fixed to a launcher of the microwave irradiator **3**, and the heating target **14** may be irradiated with microwaves after the microwaves pass through the heating promoting member **140**. An electromagnetic shield **145** may be disposed in a gap at an openable part of the irradiation chamber **36**.

[0118] As described above, the present invention has been described according to various embodiments, but the descriptions and drawings forming a part of the disclosure should not be understood to limit the present invention. Various alternate embodiments, examples and operational techniques should be obvious to those skilled in the art based on the disclosure. For example, structural elements of heating devices shown in different drawings may be combined. The present invention should be understood to include various embodiments not described herein.

REFERENCE LIST

[0119] **1** stage
[0120] **2** microwave generation unit
[0121] **3** microwave irradiator
[0122] **4** non-contact thermometer
[0123] **5** window
[0124] **6** air curtain supplier

[0125] **8** part including heating promoter
[0126] **9** opening
[0127] **11** pusher
[0128] **13** part not including heating promoter
[0129] **14** heating target
[0130] **15** drain pan
[0131] **17** drain pipe
[0132] **17***a* valve
[0133] **18** rotating device
[0134] **19** caterpillar conveyor
[0135] **20** gas collection pipe
[0136] **21** tank
[0137] **22** melting furnace
[0138] **24** suction pump
[0139] **25** liquefier
[0140] **26** camera
[0141] **27** camera
[0142] **28** liquid
[0143] **29** molten metal
[0144] **30** tray
[0145] **31** roller conveyor
[0146] **32** opening
[0147] **34** carry-in stage
[0148] **36** irradiation chamber
[0149] **38** transporter
[0150] **40** movable stage
[0151] **41** stopper
[0152] **42** base
[0153] **43** pusher
[0154] **45** base
[0155] **48** roller conveyor
[0156] **103** microwave transparent window
[0157] **105** collector
[0158] **106** liquid collector
[0159] **107** gas collector
[0160] **111** supporter
[0161] **113** opening
[0162] **115** carry-in hatch
[0163] **116** driver
[0164] **117** carry-out hatch
[0165] **118** driver
[0166] **130** fan
[0167] **140** heating promoting member
[0168] **145** electromagnetic shield
[0169] **150** pipe
[0170] **155** analysis device
[0171] **160** hopper
[0172] **165** screw
[0173] **166** supplier
[0174] **167** driver
[0175] **200** non-contact thermometer
[0176] **205** press
[0177] **210***a* thermometer
[0178] **215** insulation layer
[0179] **220** heating promoting member
[0180] **225** reflection plate
[0181] **230** jig
[0182] **255** gas introduction pipe
[0183] **256** gas introduction pipe
[0184] **257** gas introduction pipe
[0185] **260** gas discharge pipe
[0186] **261** gas discharge pipe
[0187] **262** gas discharge pipe
[0188] **325** pusher
[0189] **335** guide
[0190] **340** raw material
[0191] **400** pre-heating chamber
[0192] **401** post-heating chamber
[0193] **410**A carry-in door
[0194] **410**B carry-out door
[0195] **411** carry-out door
[0196] **412** carry-in port
[0197] **413** carry-out port
[0198] **420** contact member
[0199] **425** holding member
[0200] **426** holding member
[0201] **430** shaft
[0202] **431** sleeve
[0203] **435** shaft
[0204] **440** rotation table

1. A heating device comprising:

a microwave irradiator configured to irradiate a heating target with microwaves; and

a collector configured to collect fluid generated from the heating target that is irradiated with the microwaves,

wherein the fluid includes liquid and gas,

wherein the collector includes a liquid collector configured to collect the liquid and a gas collector configured to collect the gas,

wherein the liquid collector is disposed on a lower side than the heating target in a direction of gravity,

wherein the gas collector includes a gas collection pipe that is connected to an irradiation chamber where the heating target to be irradiated with the microwaves is disposed, and

wherein the gas collector includes a liquefier configured to liquefy the gas that is collected.

2. (canceled)

3. (canceled)

4. The heating device according to claim **1**, wherein the liquid collector includes a drain pan configured to receive the liquid.

5. The heating device according to claim **4**, wherein the liquid collector further includes a drain pipe that is connected to the drain pan and through which the liquid flows.

6. The heating device according to claim **5**, wherein the liquid collector further includes a tank that is connected to the drain pipe and that stores the liquid.

7. (canceled)

8. (canceled)

9. (canceled)

10. The heating device according to claim **1**, further comprising a holding member configured to hold the heating target, the holding member including an opening for allowing the fluid to pass through to the collector.

11. The heating device according to claim **10**, wherein the holding member is rotatable.

12. The heating device according to claim **10**, wherein the holding member has a hollow shape, and the heating target is disposed inside the holding member.

13. The heating device according to claim **1**, further comprising:

an irradiation chamber where the heating target to be irradiated with the microwaves is disposed;

a pre-heating chamber connected to the irradiation chamber; and

a gaseous environment conditioner configured to equalize a gaseous environment inside the irradiation chamber and a gaseous environment inside the pre-heating chamber,

wherein the heating target before irradiation with the microwaves is disposed in the pre-heating chamber.

14. The heating device according to claim **1**, further comprising:

an irradiation chamber where the heating target to be irradiated with the microwaves is disposed;

a post-heating chamber connected to the irradiation chamber; and

a gaseous environment conditioner configured to equalize a gaseous environment inside the irradiation chamber and a gaseous environment inside the post-heating chamber,

wherein the heating target after irradiation with the microwaves is disposed in the post-heating chamber.

15. The heating device according to claim **1**, wherein the fluid is at least one of oil and water.

* * * * *