US012411364B2

(12) **United States Patent**
Uemura et al.

(10) **Patent No.: US 12,411,364 B2**
(45) **Date of Patent: Sep. 9, 2025**

(54) **OPTICAL MODULE AND MANUFACTURING METHOD OF OPTICAL MODULE FOR OPTICAL COMMUNICATION**

(71) Applicant: **Sumitomo Electric Industries, Ltd.**, Osaka (JP)

(72) Inventors: **Hiroshi Uemura**, Osaka (JP); **Keiji Tanaka**, Osaka (JP); **Taichi Misawa**, Osaka (JP)

(73) Assignee: **Sumitomo Electric Industries, Ltd.**, Osaka (JP)

(*) Notice: Subject to any disclaimer, the term of this patent is extended or adjusted under 35 U.S.C. 154(b) by 386 days.

(21) Appl. No.: **18/085,200**

(22) Filed: **Dec. 20, 2022**

(65) **Prior Publication Data**

US 2023/0194903 A1 Jun. 22, 2023

(30) **Foreign Application Priority Data**

Dec. 22, 2021 (JP) 2021-208393

(51) **Int. Cl.**

G02F 1/01	(2006.01)
C09J 1/00	(2006.01)
G02F 1/21	(2006.01)

(52) **U.S. Cl.**

CPC ***G02F 1/0121*** (2013.01); ***C09J 1/00*** (2013.01); ***G02F 1/0102*** (2013.01); ***G02F 1/212*** (2021.01); *G02F 2202/28* (2013.01)

(58) **Field of Classification Search**

CPC G02F 1/0121; G02F 1/212; G02F 1/0102; G02F 2202/28; C09J 1/00

USPC 359/245

See application file for complete search history.

(56) **References Cited**

U.S. PATENT DOCUMENTS

2007/0094308	A1	4/2007	Mitchell et al.	
2014/0233897	A1	8/2014	Ishikawa et al.	
2015/0180580	A1	6/2015	Coult et al.	
2017/0094308	A1	3/2017	Haskell et al.	
2020/0363585	A1*	11/2020	Byrd	G02B 6/12004

FOREIGN PATENT DOCUMENTS

JP	2013-109311	6/2013
JP	2013-229375	11/2013
JP	2018-189699 A	11/2018

* cited by examiner

Primary Examiner — William Choi

(74) *Attorney, Agent, or Firm* — McCarter & English, LLP.; Michael A. Sartori

(57) **ABSTRACT**

An optical module includes: a housing having a first face and a second face parallel to the first face; a first block fixed to the first face of the housing by a first adhesive; an integrated circuit (IC) fixed to the first block by a second adhesive having a thickness larger than a thickness of the first adhesive; a thermoelectric cooler (TEC) fixed to the second face of the housing; an optical circuit element fixed to the TEC; and an interconnection board mounted on the IC and the optical circuit element, the interconnection board being configured to electrically couple the IC to the optical circuit element. The first block is sandwiched between the housing and the IC. The TEC is sandwiched between the housing and the optical circuit element.

11 Claims, 20 Drawing Sheets

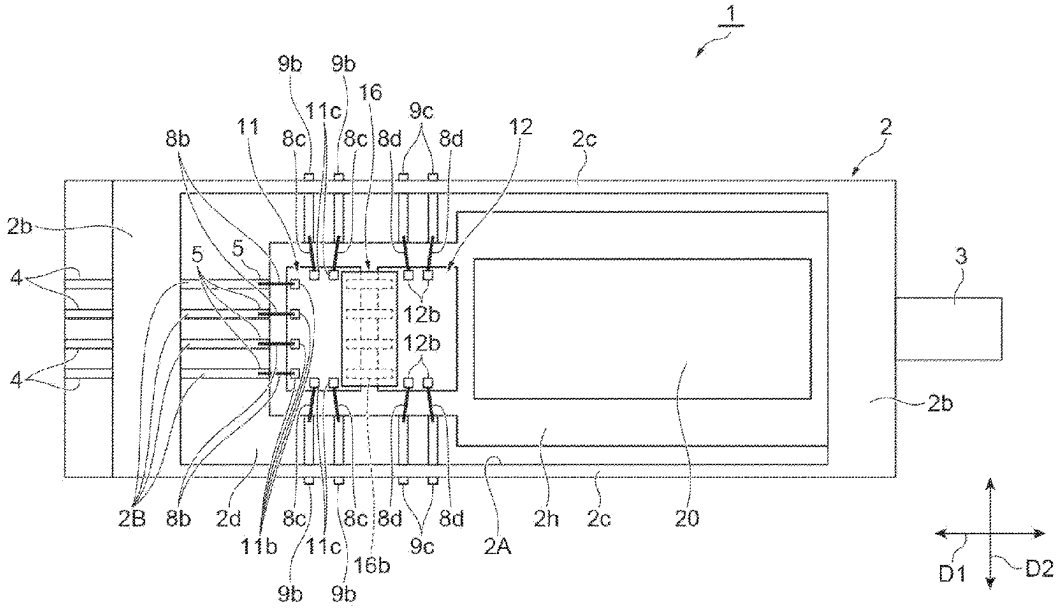

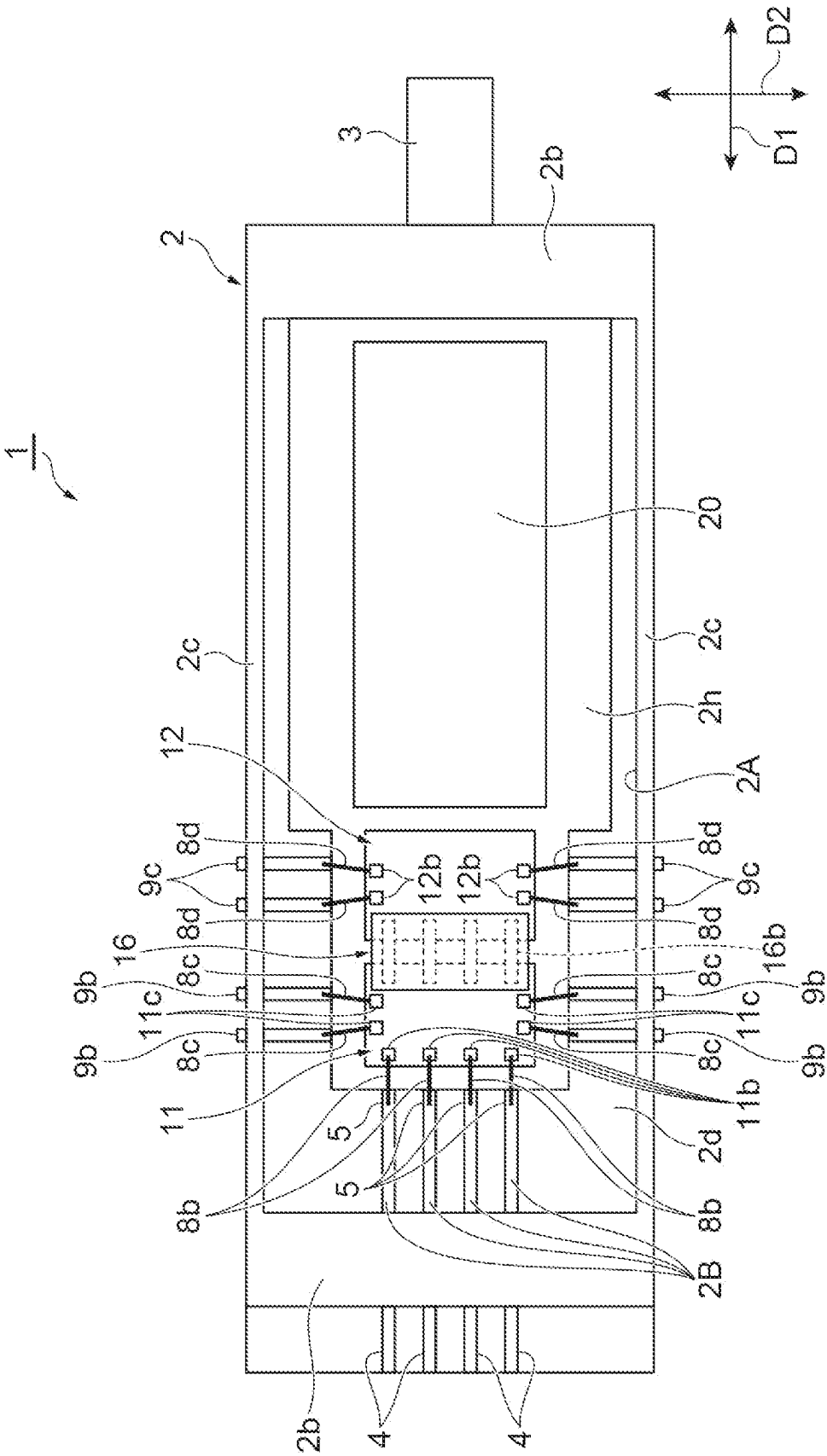
1
2
2b
3
D1
D2
20
2c
2h
2A
12
12b
8d
9c
16
16b
8c
9b
11c
11
11b
5
2d
8b
2B
4

Fig.1

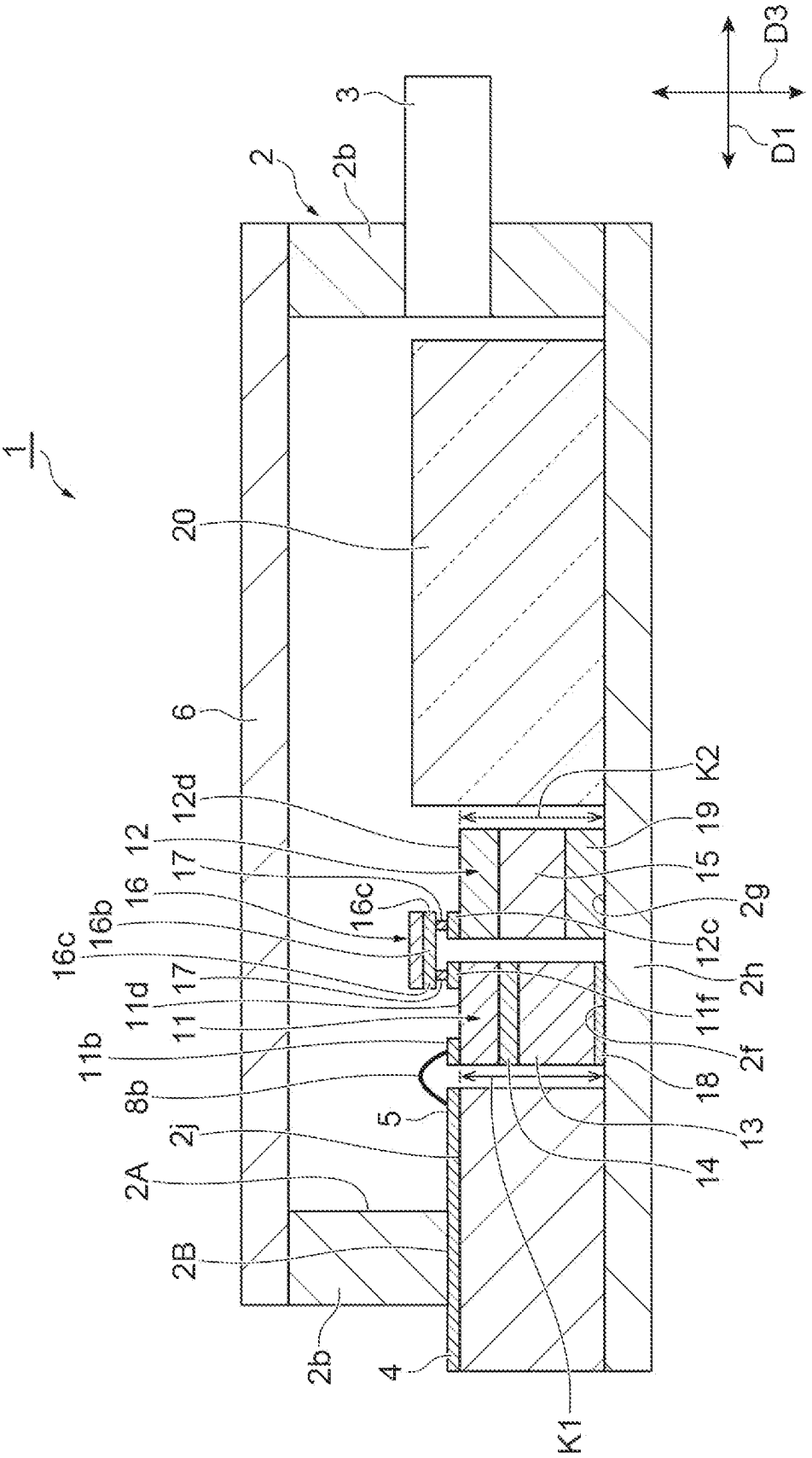
1
2
2b
3
D3
D1
20
6
12d
12
17
16
16b
16c
11d
11
11b
8b
2j
2A
2B
2b
4
5
K1
K2
19
15
2g
12c
2h
11f
2f
18
13
14

Fig.2

Fig.3

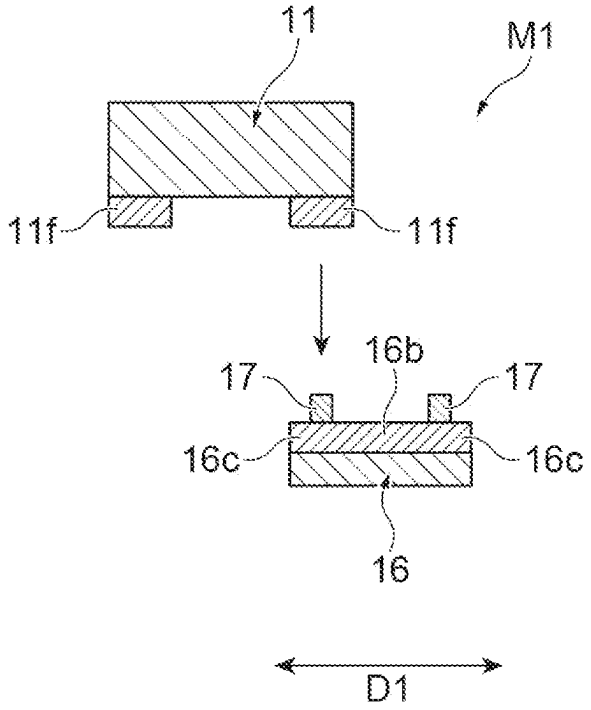

Fig.4

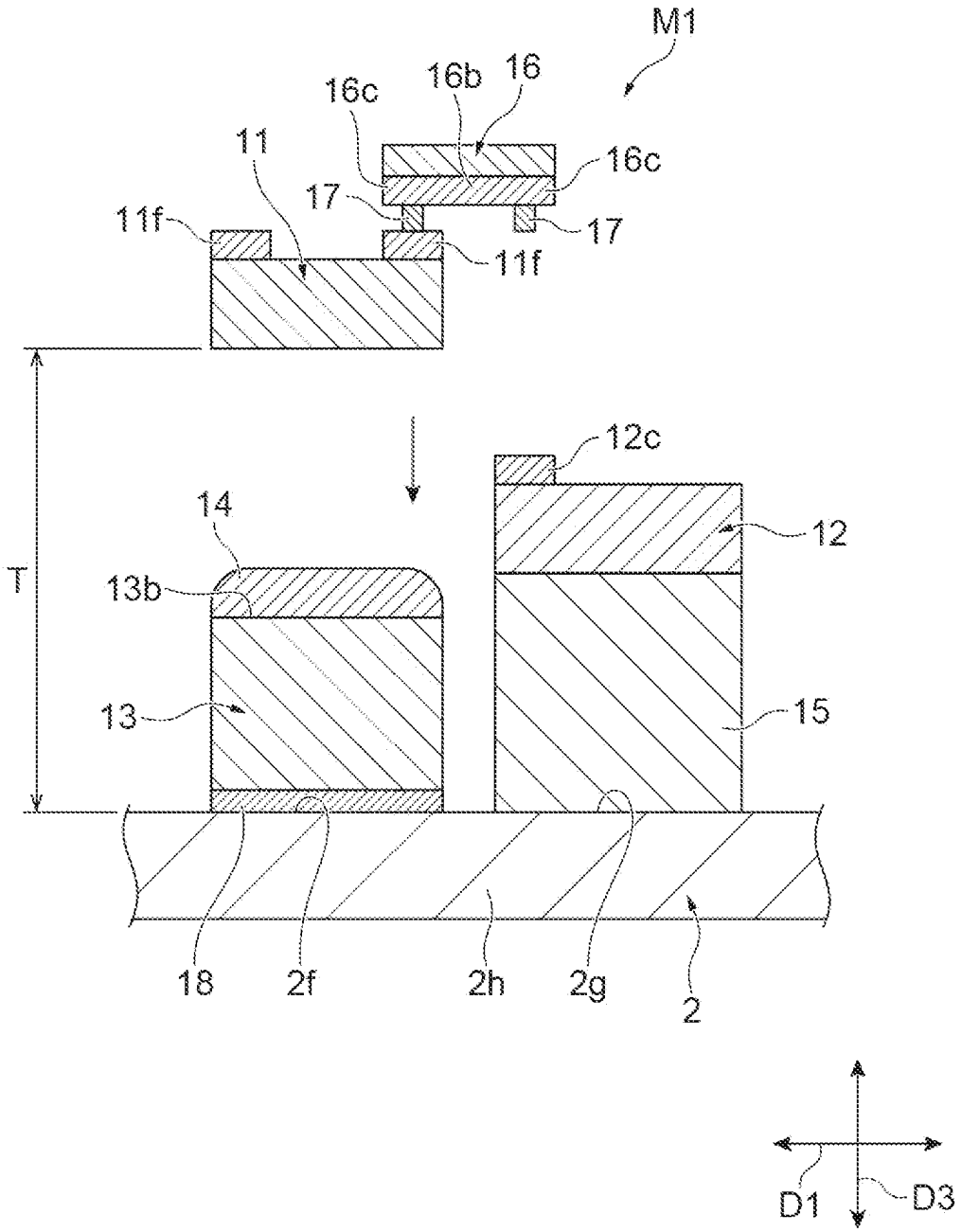
M1
16c
16b
16
16c
11
17
17
11f
11f
12c
14
12
T
13b
13
15
18
2f
2h
2g
2
D1
D3

Fig.5

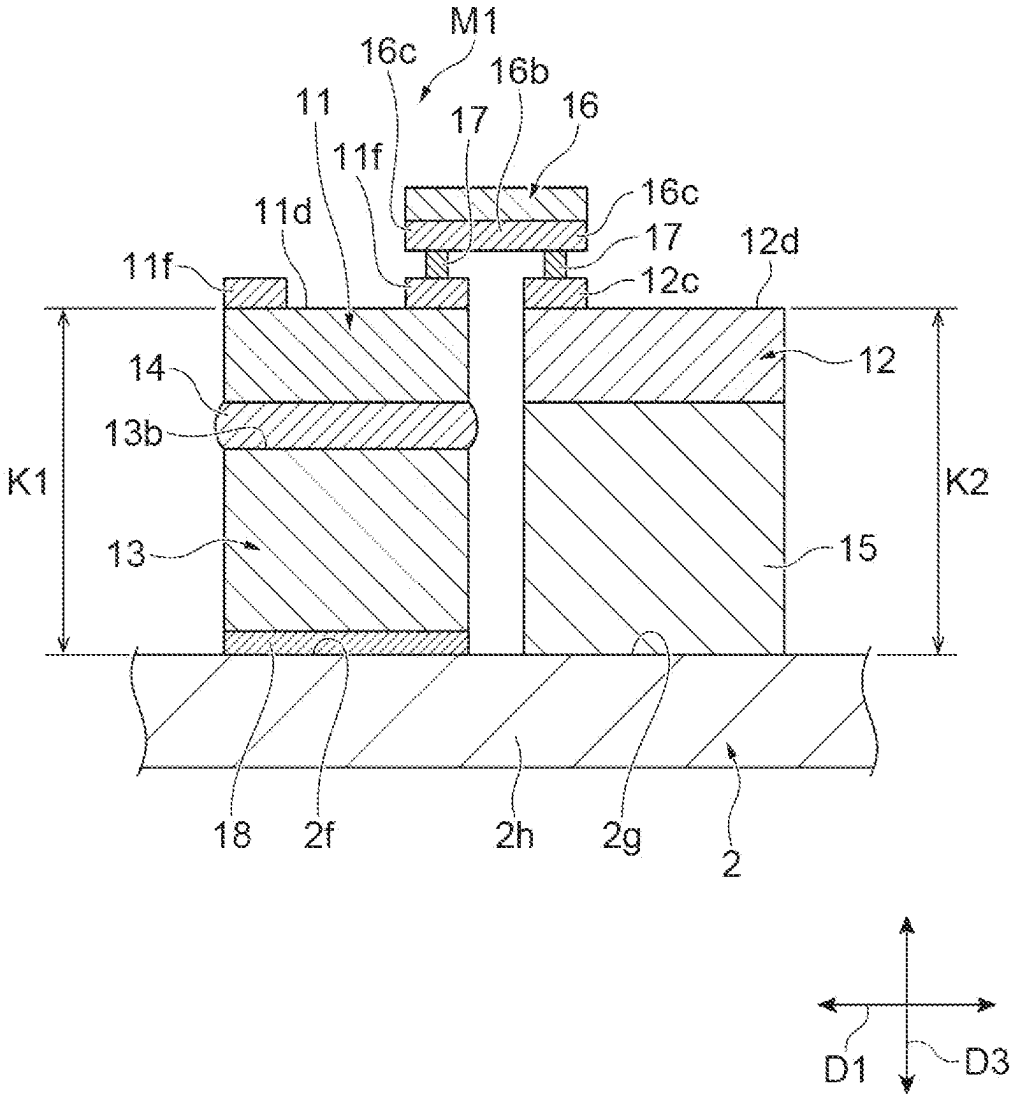
M1
16c
16b
11
17
16
11f
16c
11d
17
12d
11f
12c
12
14
13b
K1
K2
13
15
18
2f
2h
2g
2
D1
D3

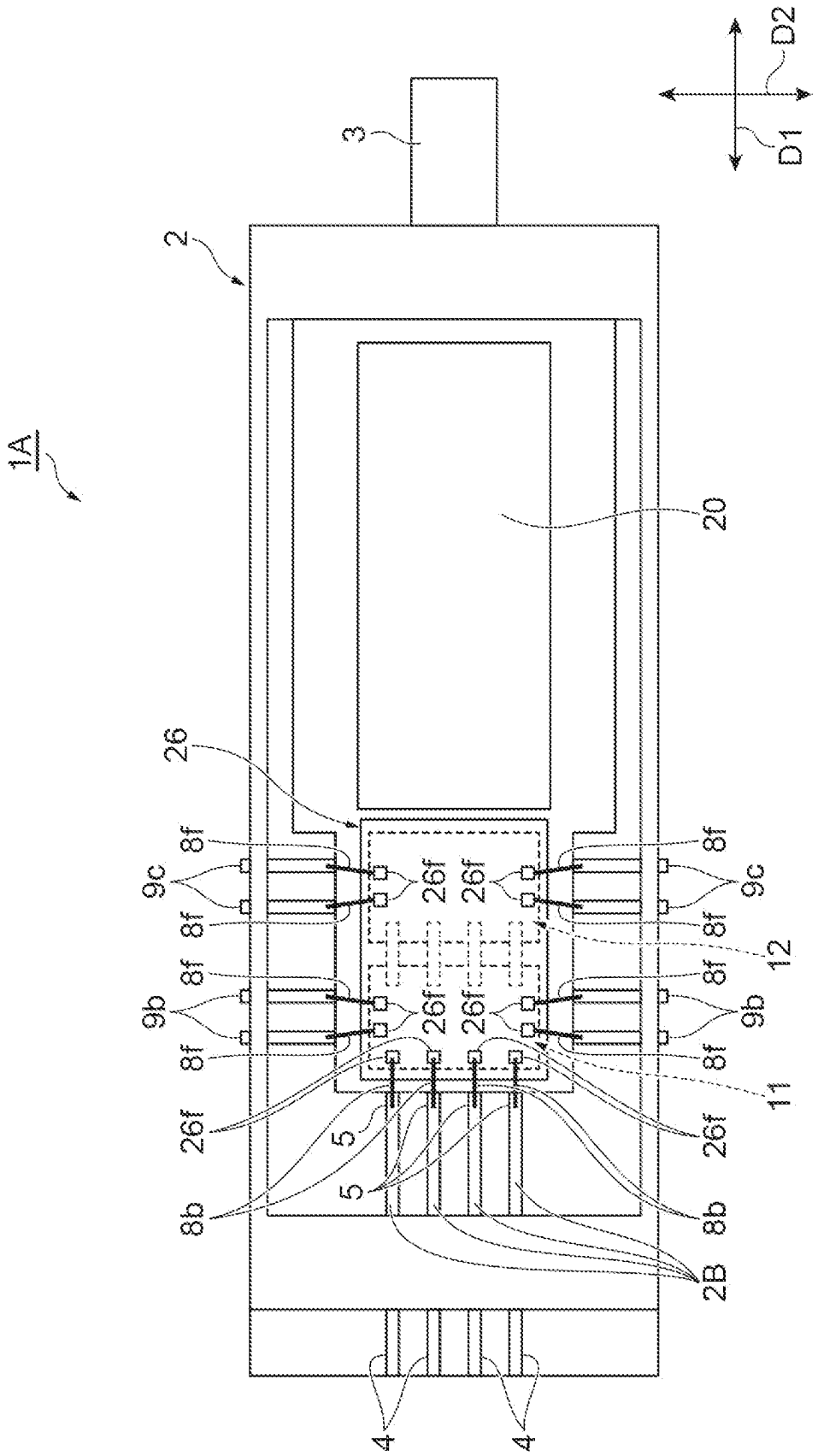

Fig.6

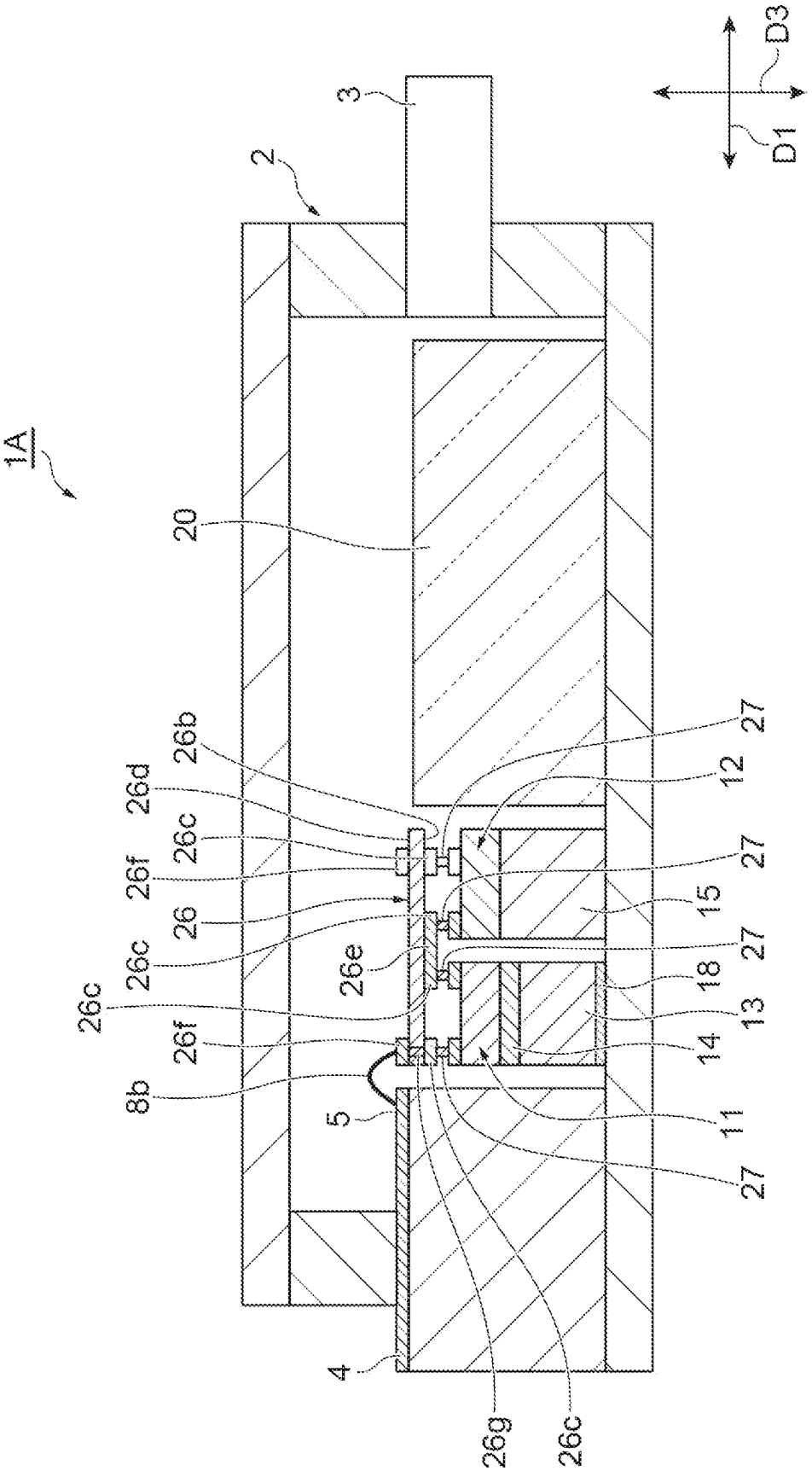
1A
2
3
D3
D1
20
26b
26d
26c
26f
26
26c
26c
26f
8b
5
4
26g
26c
26e
27
12
27
15
27
18
13
14
11
27

Fig.7

Fig.8

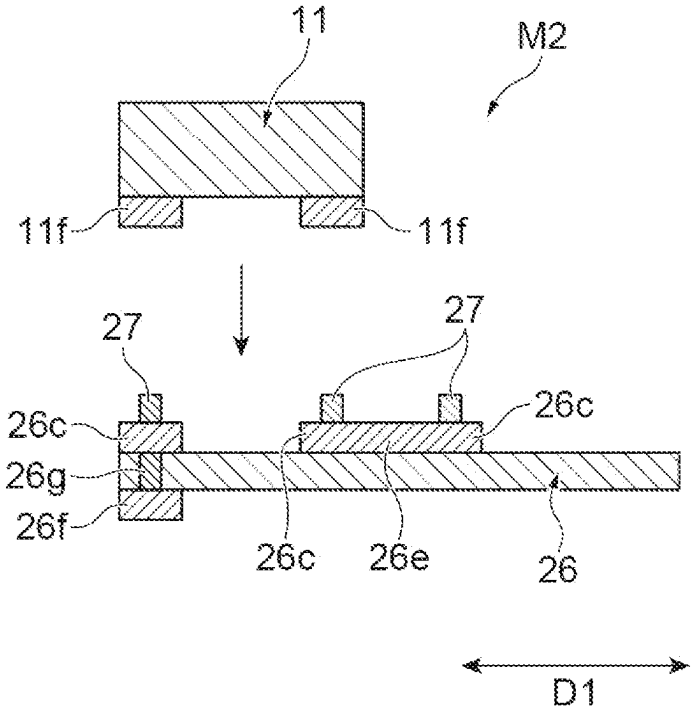

Fig.9

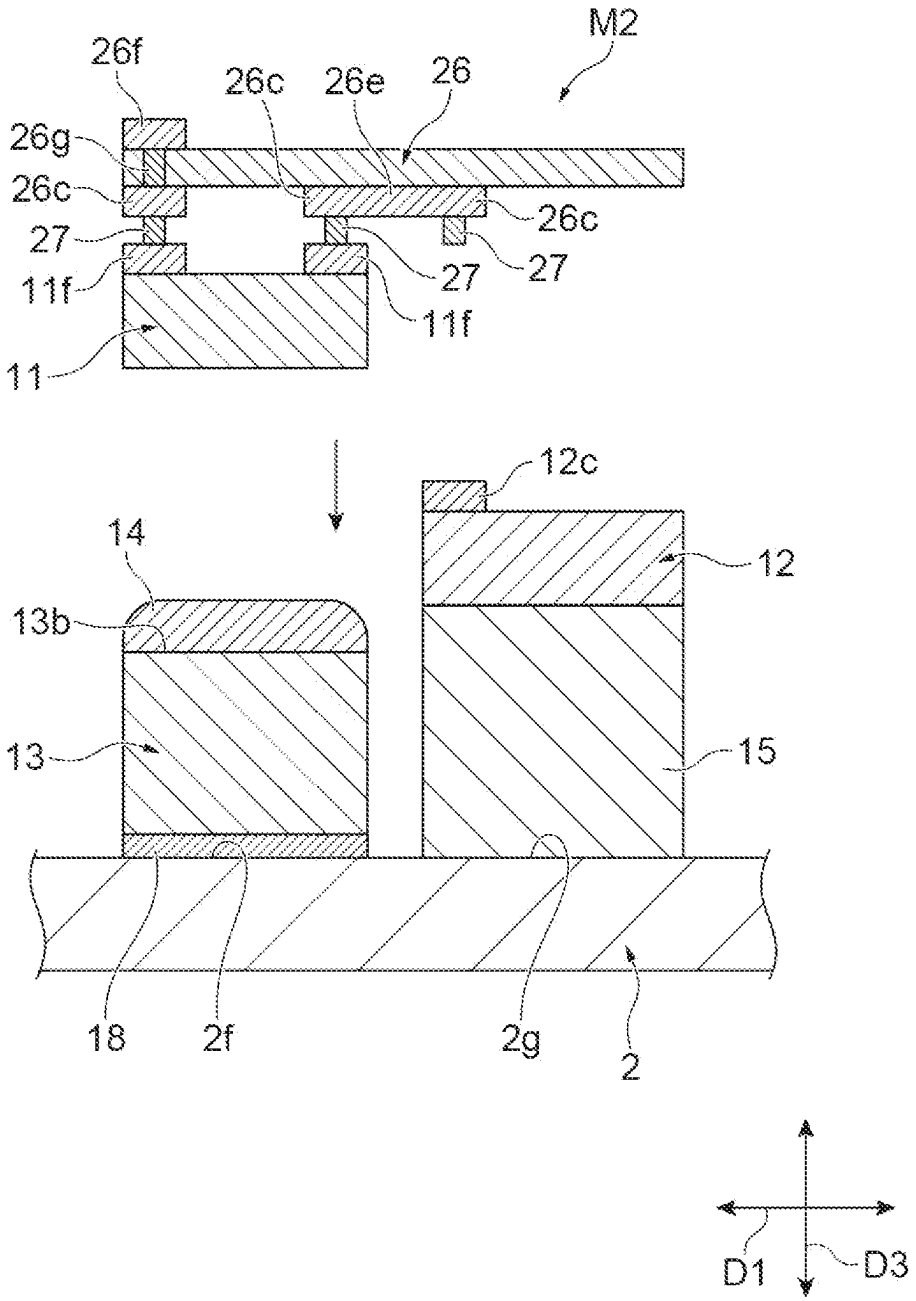
M2
26f
26c
26e
26
26g
26c
26c
27
27
27
11f
11f
11
12c
14
12
13b
13
15
18
2f
2g
2
D1
D3

Fig.10

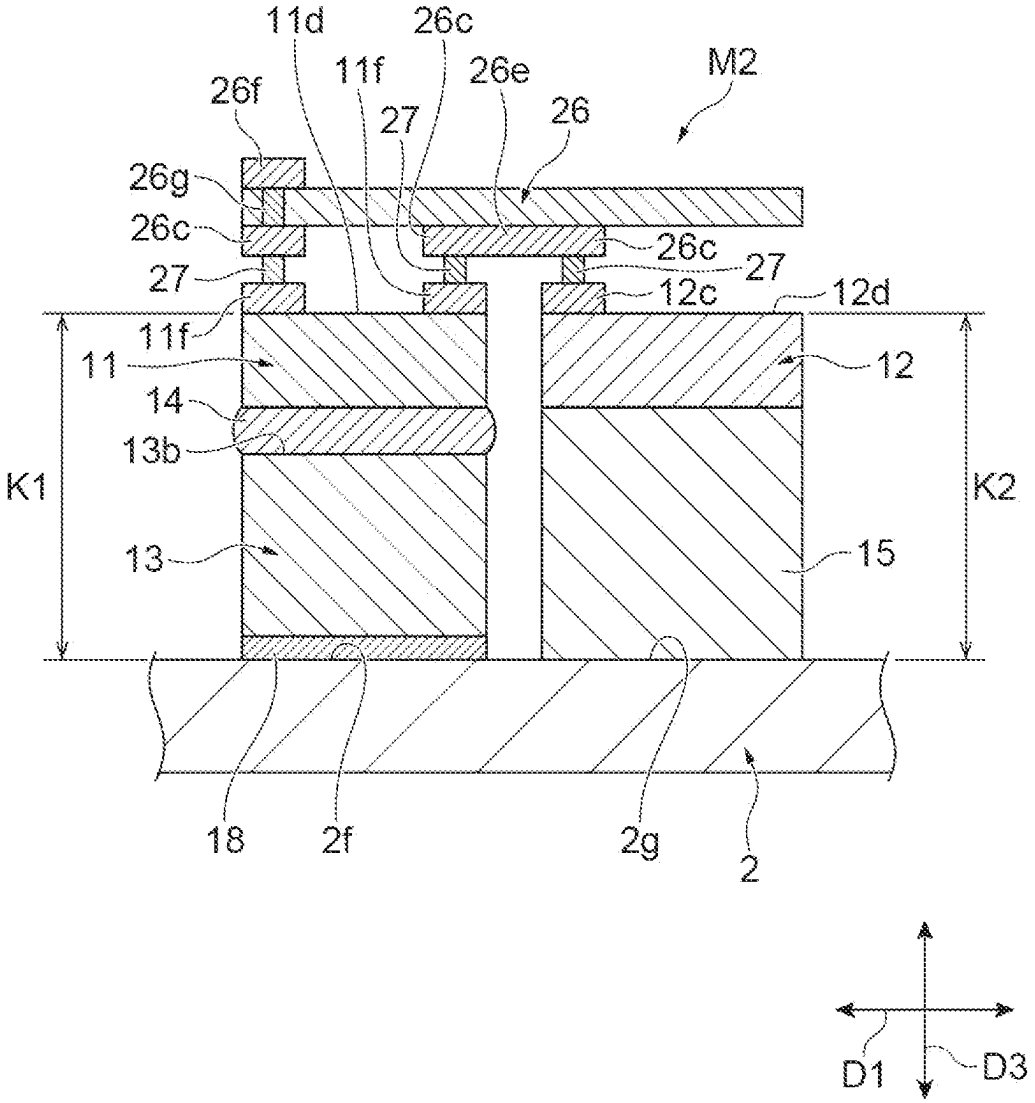
11d
26c
11f
26e
M2
26f
27
26
26g
26c
26c
27
27
12c
12d
11f
11
12
14
13b
K1
K2
13
15
18
2f
2g
2
D1
D3

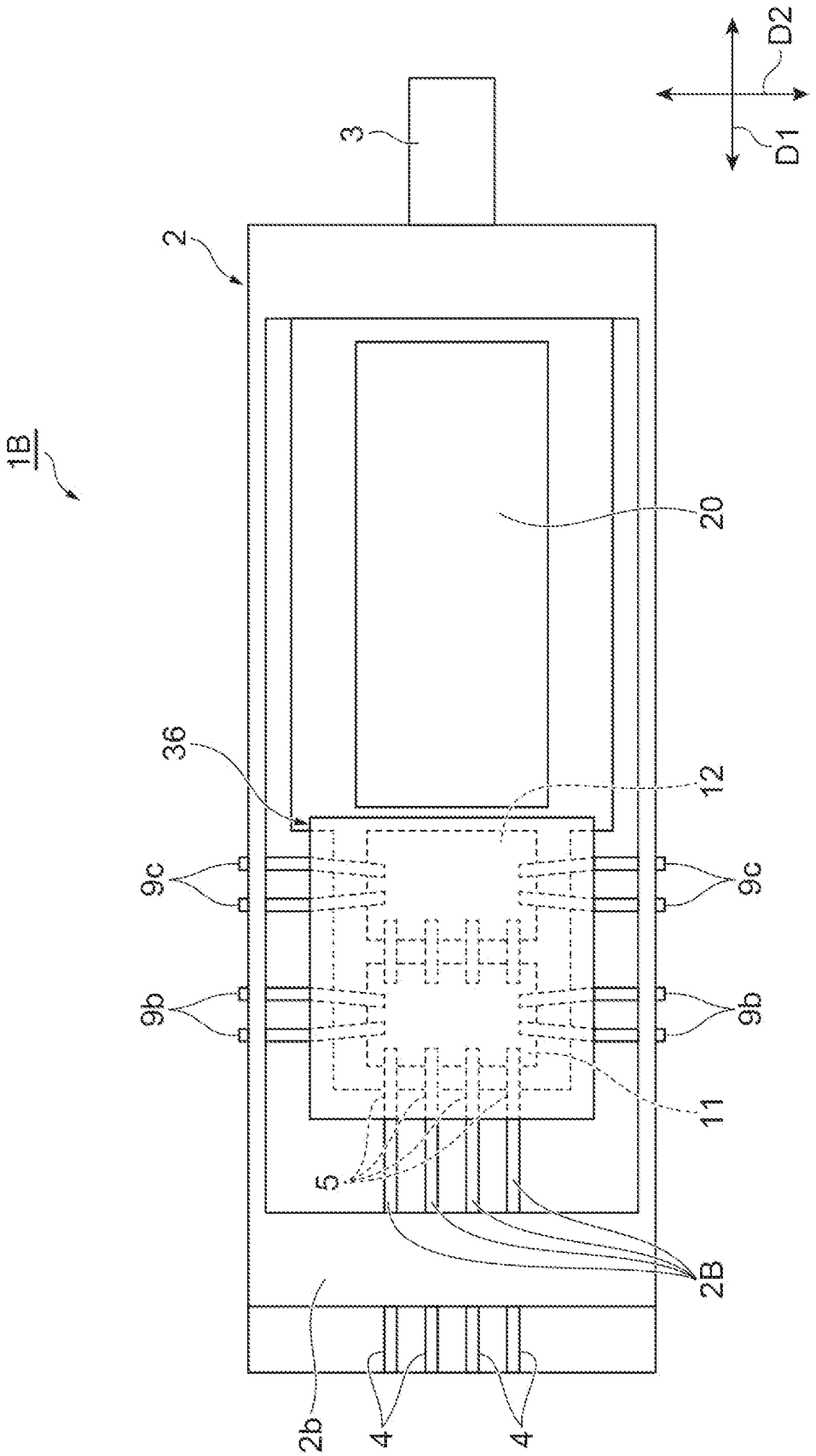

Fig.11

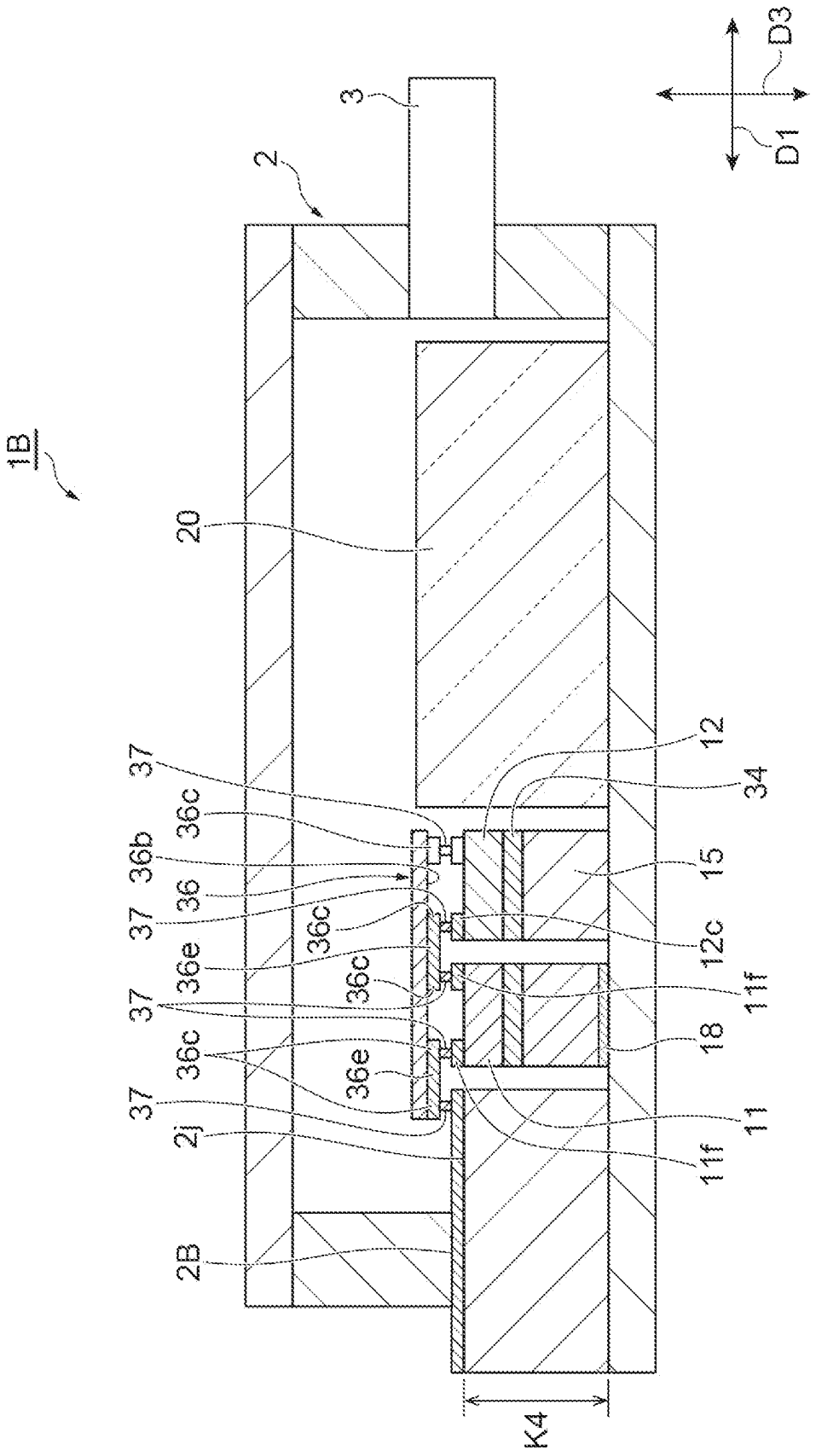
1B
2
3
D3
D1
20
37
36c
36b
36
37
36c
36e
37
36c
36c
37
36e
2j
2B
12
34
15
12c
11f
18
11
11f
K4

Fig.12

Fig.13

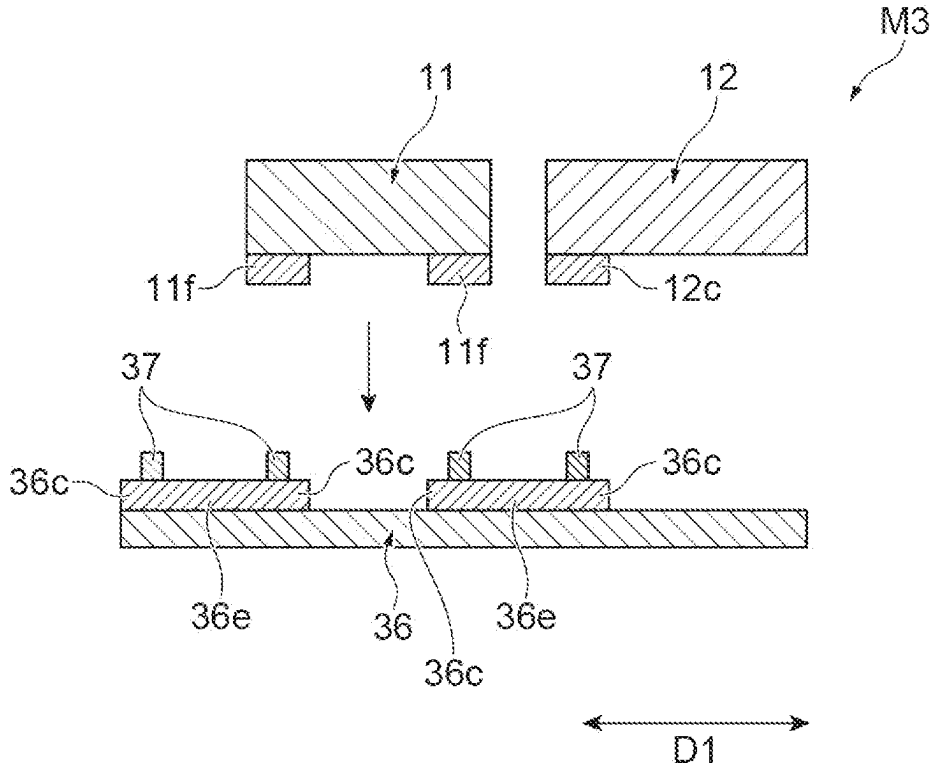

Fig.14

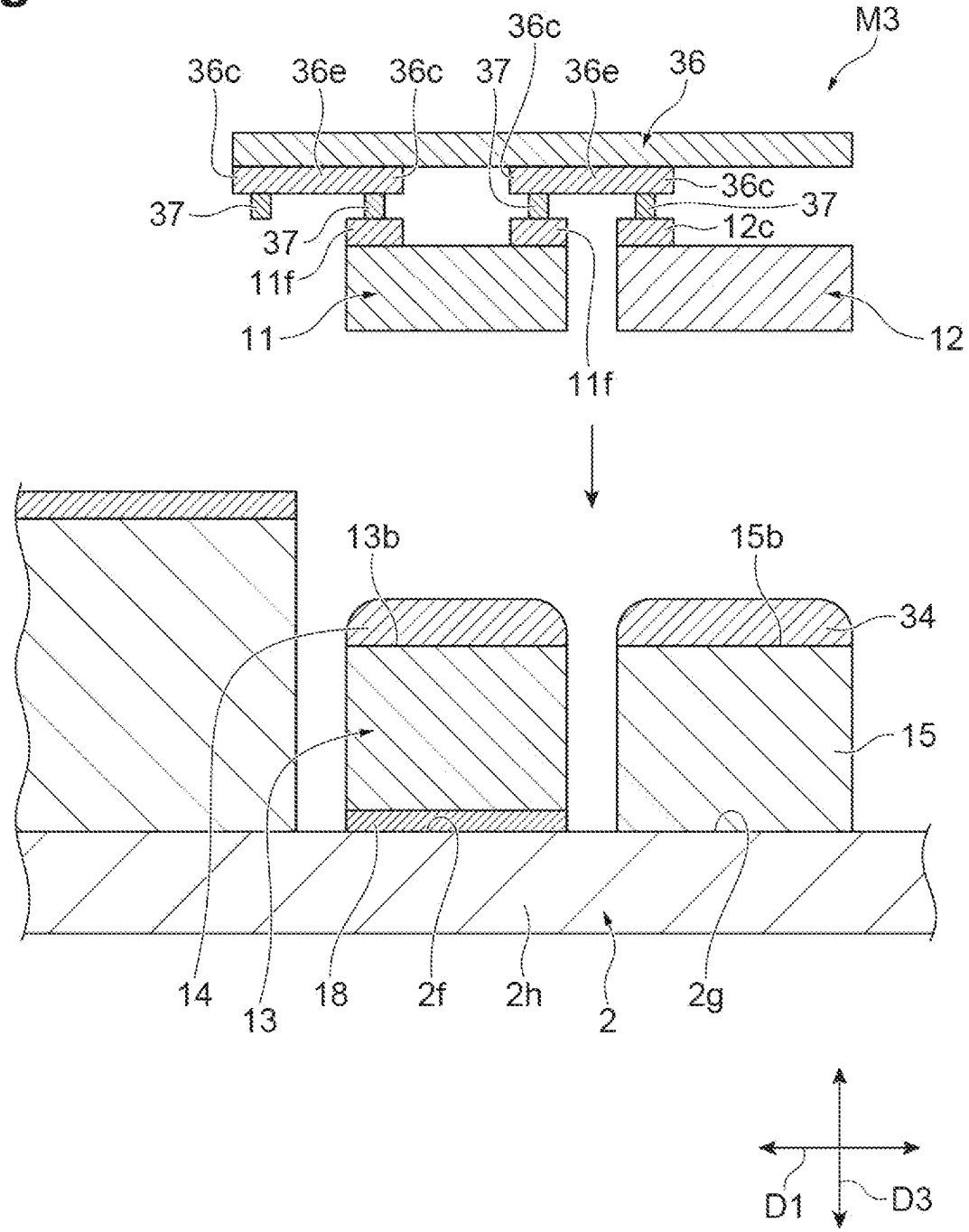
M3
36c
36c
36e
36c
37
36e
36
36c
37
37
37
12c
11f
11
12
11f
13b
15b
34
15
14
13
18
2f
2h
2
2g
D1
D3

Fig.15

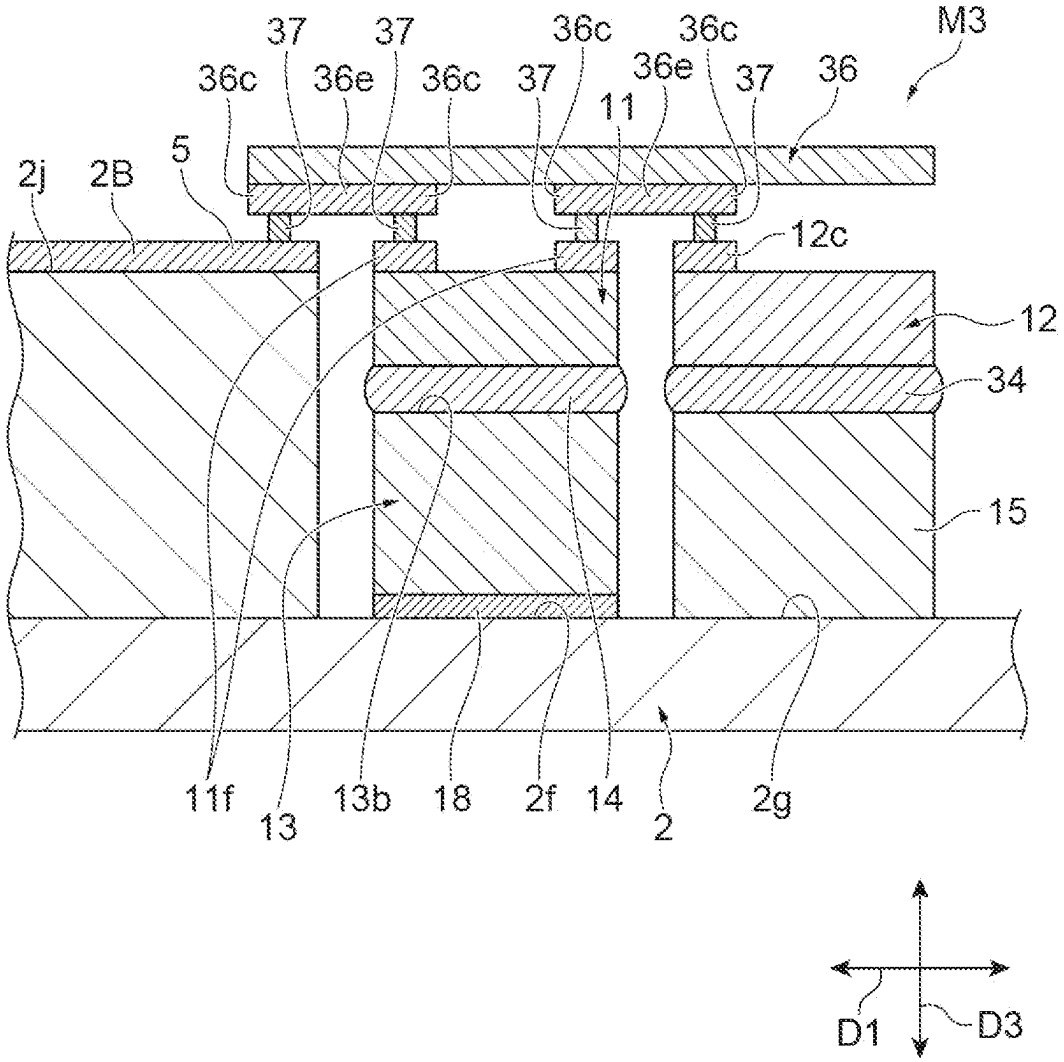
M3
37
37
36c
36c
36c
36e
36c
37
36e
37
36
11
5
2j
2B
12c
12
34
15
11f
13
13b
18
2f
14
2
2g
D1
D3

Fig.16

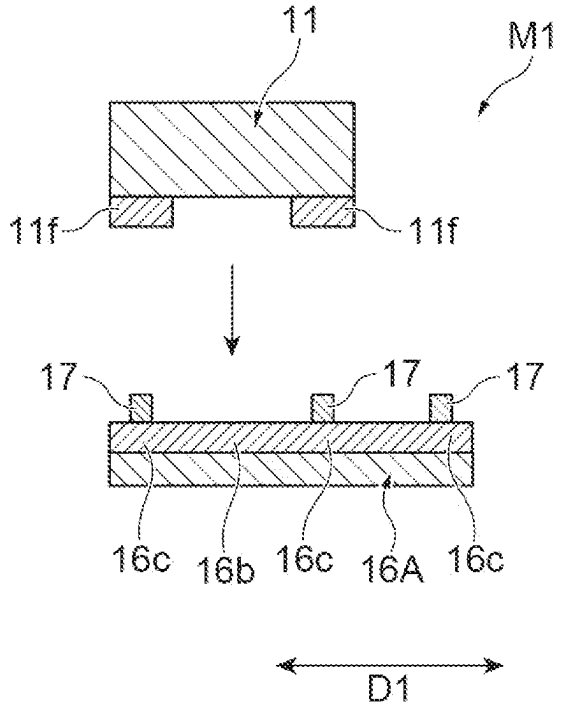

Fig.17

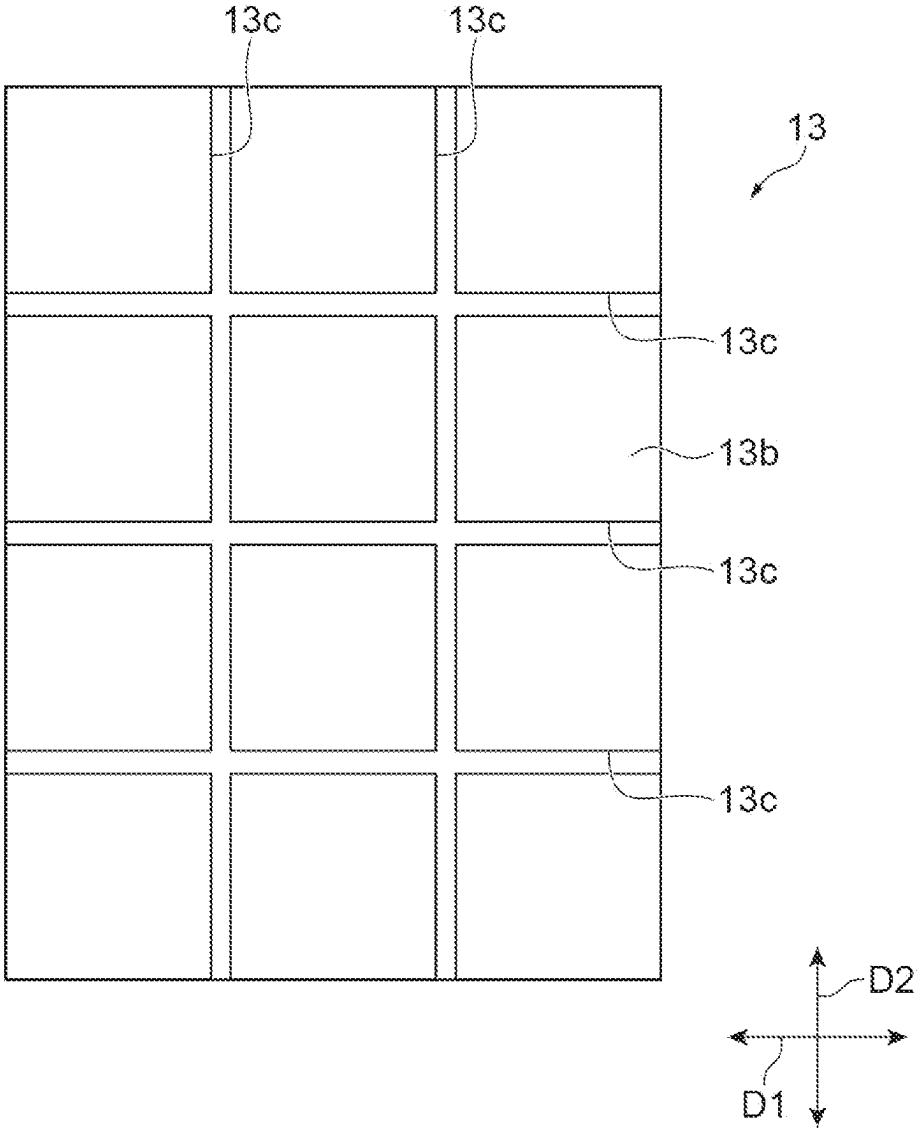

Fig.18

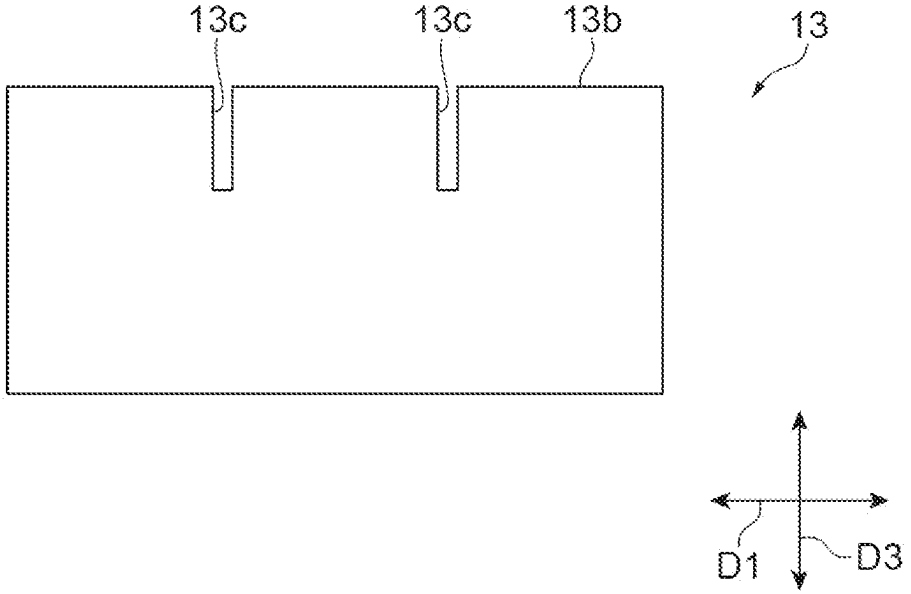

Fig.19

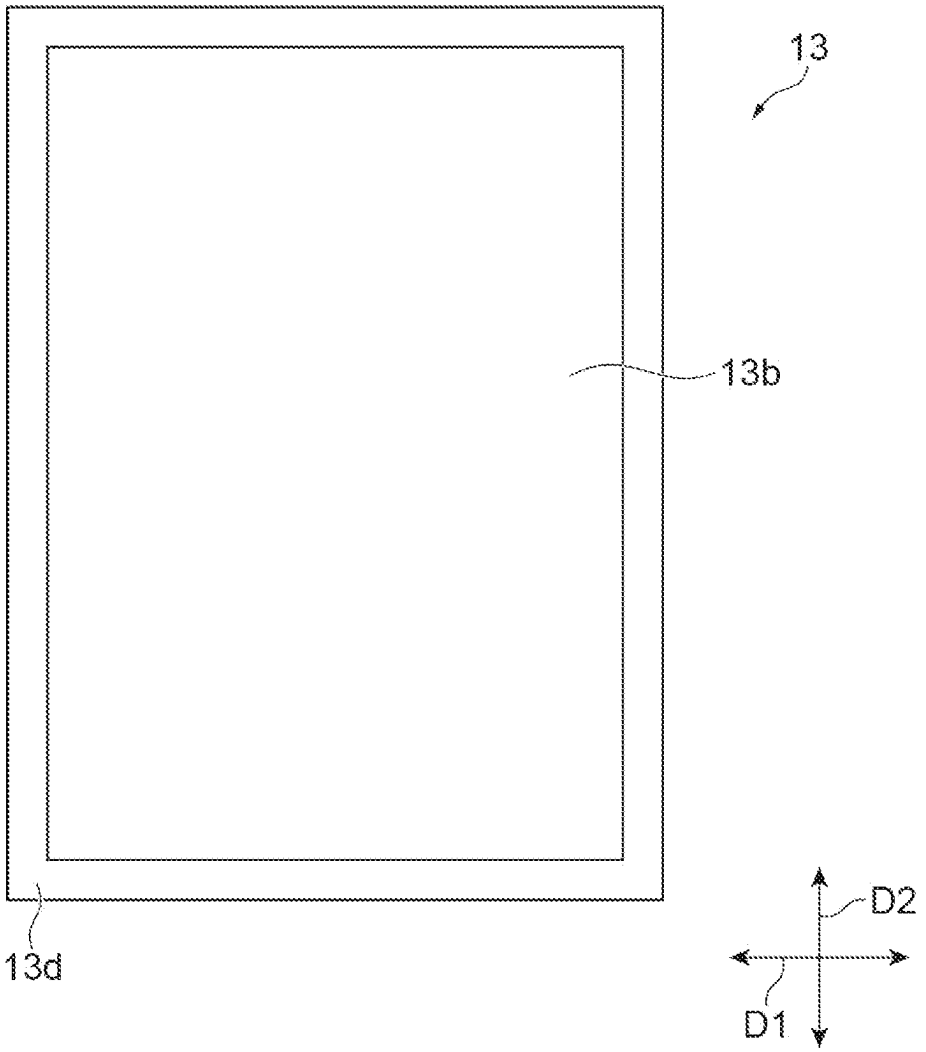

Fig.20

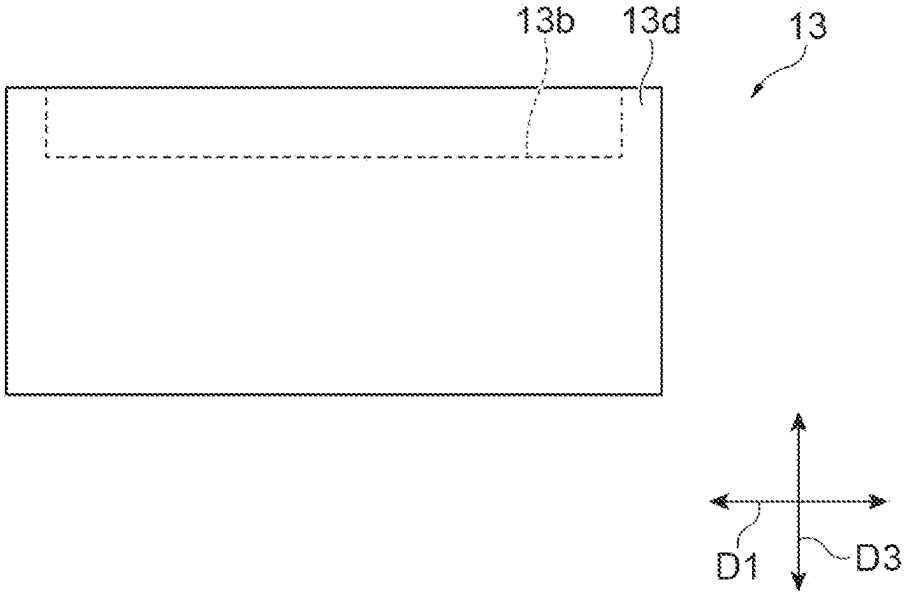

OPTICAL MODULE AND MANUFACTURING METHOD OF OPTICAL MODULE FOR OPTICAL COMMUNICATION

CROSS-REFERENCE TO RELATED APPLICATION

This application claims priority from Japanese Patent Application No. 2021-208393, filed on Dec. 22, 2021, the entire subject matter of which is incorporated herein by reference.

TECHNICAL FIELD

The present disclosure relates to an optical module for optical communication and a method of manufacturing the optical module.

BACKGROUND

Japanese Unexamined Patent Publication No. 2018-189699 describes an optical transmitter. The optical transmitter includes a Mach-Zehnder modulator, a driver IC, and an interconnection board. The interconnection board connects the Mach-Zehnder modulator and the driver IC to each other by flip-chip assembly. The Mach-Zehnder modulator is configured with an optical waveguide made of a semiconductor. The Mach-Zehnder modulator has a ground electrode line and a ground electrode and is of a differential drive type. The driver IC has an open-collector type or open-drain type output system and drives the Mach-Zehnder modulator. The Mach-Zehnder modulator is mounted on a thermoelectric cooler cooling the Mach-Zehnder modulator. The thermoelectric coolers are configured with Peltier devices. The driver IC is mounted on a metal block for radiating heat from the driver IC.

U.S. Patent Application Publication No. 2015/0180580 discloses a modulator driver having first and second output ports, an integrated optical transmitter circuit with a modulator having first and second input ports, first and second termination resistors, and an interconnection bridge assembly including a board. A transmission line of which impedance is controlled is formed on the board. The board has an impedance control unit and a transmission unit including first and second signal lines electrically insulated from each other. The interconnection bridge assembly transmits impedance-controlled differential electrical signals from the modulator driver to the modulator and transmits electrical signals from the modulator to the first and second termination resistors.

SUMMARY

An optical module according to the present disclosure includes: a housing having a first face and a second face parallel to the first face; a first block fixed to the first face of the housing by a first adhesive; an integrated circuit (IC) fixed to the first block by a second adhesive having a thickness larger than a thickness of the first adhesive; a thermoelectric cooler (TEC) fixed to the second face of the housing; an optical circuit element fixed to the TEC; and an interconnection board mounted on the IC and the optical circuit element, the interconnection board being configured to electrically couple the IC to the optical circuit element. The first block is sandwiched between the housing and the IC. The TEC is sandwiched between the housing and the optical circuit element.

A manufacturing method of an optical module according to the present disclosure includes: bonding a first block to a first face of a housing by a first adhesive; mounting a thermoelectric cooler (TEC) on a second face of the housing; preparing a chip module by assembling an integrated circuit (IC) and an optical circuit element on an interconnection board by flip-chip assembly; applying a second adhesive on the first block bonded on the first face of the housing, the second adhesive having a thickness larger than a thickness of the first adhesive; applying a third adhesive on the TEC mounted on the second face of the housing; pressing the IC against the second adhesive and simultaneously pressing the optical circuit element against the third adhesive, after holding the chip module at a predetermined height from one of the first face and the second face; and curing the second adhesive and the third adhesive for bonding the chip module to the first block and the TEC.

BRIEF DESCRIPTION OF THE DRAWING

FIG. **1** is a plan view illustrating a structure of an optical module according to an embodiment;

FIG. **2** is a longitudinal sectional view of the optical module according to the embodiment;

FIG. **3** is a view illustrating a process of a method of manufacturing the optical module according to the embodiment;

FIG. **4** is a view illustrating a process of the method of manufacturing the optical module according to the embodiment;

FIG. **5** is a view illustrating a process of the method of manufacturing the optical module according to the embodiment;

FIG. **6** is a plan view illustrating a structure of an optical module according to Modified Example 1;

FIG. **7** is a longitudinal sectional view of the optical module according to Modified Example 1;

FIG. **8** is a view illustrating a process of a method of manufacturing an optical module according to Modified Example 1;

FIG. **9** is a view illustrating a process of the method of manufacturing the optical module according to Modified Example 1;

FIG. **10** is a view illustrating a process of the method of manufacturing the optical module according to Modified Example 1;

FIG. **11** is a plan view illustrating a structure of an optical module according to Modified Example 2;

FIG. **12** is a longitudinal sectional view of the optical module according to Modified Example 2;

FIG. **13** is a view illustrating a process of a method of manufacturing the optical module according to Modified Example 2;

FIG. **14** is a view illustrating a process of the method of manufacturing the optical module according to Modified Example 2;

FIG. **15** is a view illustrating a process of the method of manufacturing the optical module according to Modified Example 2;

FIG. **16** is a side view of an interconnection board and a driver IC according to Modified Example;

FIG. **17** is a plan view illustrating a structure of a heat radiation block of the optical module according to the embodiment;

FIG. **18** is a side view illustrating the structure of the heat radiation block of the optical module according to the embodiment;

FIG. **19** is a plan view illustrating the structure of a heat radiation block of the optical module according to the embodiment; and

FIG. **20** is a side view illustrating the structure of the heat radiation block of the optical module according to the embodiment.

DETAILED DESCRIPTION

Specific examples of an optical module and a method of manufacturing the optical module according to an embodiment of the present disclosure will be described below with reference to the drawings. It is noted that the present invention is not limited to the following examples, but is intended to include all modifications indicated in the scope of claims and within the scope of equivalents to the scope of claims. In the description of the drawings, the same or corresponding elements are denoted by the same reference numerals, and redundant descriptions are omitted as appropriate. In addition, the drawings may be partially simplified or exaggerated for easy understanding, and the dimensional ratios and the like are not limited to those described in the drawings.

FIG. **1** is a plan view illustrating a structure of an optical module **1** according to the present embodiment. FIG. **2** is a cross-sectional view illustrating the optical module **1**. As illustrated in FIGS. **1** and **2**, the optical module **1** is, for example, an optical transmitter module (TOSA: Transmitter Optical Sub Assembly) including a rectangular parallelepiped housing **2**, an optical connector (sleeve) **3**, and terminals **4**. The housing **2** is made of, for example, a ceramic. The housing **2** extends in a direction D**1** that is a longitudinal direction of the housing **2**, a direction D**2** that is a width direction of the housing **2**, and a direction D**3** that is a height direction of the housing **2**. The direction D**1**, the direction D**2**, and the direction D**3** are perpendicular to each other. For example, a length of the housing **2** in the direction D**1** is larger than a length of the housing **2** in the direction D**2** and is larger than a length of the housing **2** in the direction D**3**.

The housing **2** has a pair of first side walls **2***b* located at ends in the direction D**1**, a pair of second side walls **2***c* located at ends in the direction D**2**, and a bottom wall **2***h* located at one end in the direction D**3**. An internal space **2**A of the housing **2** is defined in a region surrounded by the pair of first side walls **2***b*, the pair of second side walls **2***c*, and the bottom wall **2***h*. Components of the optical module **1** are accommodated in the internal space **2**A. The optical module **1** further includes a lid **6** that hermetically seals the internal space **2**A. The lid **6** is made of, for example, a metal. The opposite side of the bottom wall **2***h* of the housing **2** is open to the outside, and the internal space **2**A is hermetically sealed by bonding the lid **6** to the housing **2** so as to close the opening. For example, the lid **6** is bonded to the housing **2** by seam welding. FIG. **1** illustrates the internal space **2**A of the housing **2** with the lid **6** omitted in a plan view from the direction D**3**. It is noted that, in the direction D**3**, the direction in which the lid **6** is provided with respect to the bottom wall **2***h* may be referred to as up, upper side, or upward, and the direction opposite to up, upper side, or upward may be referred to as down, lower side, or downward.

A driver IC **11**, an optical modulator **12** which is an optical circuit element, and an optical component **20** are provided in the internal space **2**A. The driver IC **11** is an electric circuit formed, for example, on a silicon (Si) board using a SiGe BiCMOS (Bipolar Complementary Metal Oxide Semiconductor) process which amplifies an electric signal supplied from the outside through the terminal **4** to supply the amplified electric signal (driving signal) to the optical modulator **12**. The optical modulator **12** is, for example, a Mach-Zehnder interferometer formed on an indium phosphide (InP) board, and modulates an optical signal (CW light) based on an electrical signal supplied from the driver IC **11** to output the modulated optical signal (optical transmission signal). For example, the CW light is supplied from the outside through an optical connector **3**. An electrical signal (driving signal) supplied from the driver IC **11** to the optical modulator **12** passes through, for example, the transmission lines formed at an electrical signal output unit of the driver IC **11** and an electrical signal input unit of the optical modulator **12**. It is preferable that these transmission lines have characteristic impedance values substantially equal to each other, and the characteristic impedance is, for example, 60Ω in differential impedance. Herein, "substantially equal" denotes that the values may differ within a practically permissible range. For example, the characteristic impedance value may be between 55Ω and 65Ω in differential impedance. The housing **2** has a heat radiation plate (heat radiation member). For example, the bottom wall **2***h* is configured with the heat radiation plate. A heat radiation plate **2***h* is made of, for example, copper tungsten (CuW). The heat radiation plate **2***h* may be made of, for example, a metal material other than CuW. Hereinafter, the bottom wall is also referred to as a heat radiation plate. The driver IC **11** is mounted on the heat radiation plate **2***h* (heat radiation member) by a second adhesive **14**, a first heat radiation block **13**, and a first adhesive **18**. The first heat radiation block **13** is bonded to a first face **2***f* of the housing **2** by the first adhesive **18**. The first heat radiation block **13** may be made of, for example, metal or ceramic. The first heat radiation block **13** is fixed to the first face **2***f* of the housing **2** by the first adhesive **18**, and the driver IC **11** is fixed to the first heat radiation block **13** by the second adhesive **14**. Therefore, the driver IC **11** is fixed to the first face **2***f* of the housing **2** by the cured first adhesive **18**, the first heat radiation block **13**, and the cured second adhesive **14**. The first heat radiation block **13** is sandwiched between the housing **2** and the driver IC **11** in the direction D**3**. The second adhesive **14**, the first heat radiation block **13**, and the first adhesive **18** constitute a heat radiation path for releasing heat (Joule heat) generated by the driver IC **11** during operation to the heat radiation plate **2***h*.

The first adhesive **18** and the second adhesive **14** are, for example, conductive adhesives. The conductive adhesive is, for example, a silver paste. As will be described later, the first adhesive **18** and the second adhesive **14** are applied in an uncured state, and when heated and cured, a bonded state is formed. The first adhesive **18** and the second adhesive **14** are, for example, in a paste state when applied, but are in a cured state by heating or a passage of time. It is preferable that the first adhesive **18** and the second adhesive **14** have good thermal conductivity. The thermal conductivity in the cured state thereof is, for example, preferably 1 W/(m·K) or more, more preferably 10 W/(m·K) or more. Accordingly, the heat resistance of the second adhesive **14** is suppressed to be low, and heat is efficiently radiated to the heat radiation plate **2***h* through the first heat radiation block **13**, so that the temperature rise of the driver IC **11** can be suppressed due to heat generation. As a result, the operation temperature of the driver IC **11** can be prevented from exceeding the allowable range, and the performance deterioration can be suppressed. The first adhesive **18** and the second adhesive **14** may have electrical conductivity as well as thermal conductivity. As the first adhesive **18** and the second adhesive **14**,

for example, adhesives containing metal particles or ceramic fillers, silicone-based adhesives, pastes containing metal nanoparticles such as gold, silver, and copper, gold-tin alloy pastes, or solder pastes (cream solders) may be used. Different materials may be used for the first adhesive **18** and the second adhesive **14**.

The optical modulator **12** is mounted on the heat radiation plate **2***h* through a TEC (Thermo Electric Cooler) **15**, which is a temperature control element. The TEC **15** is bonded to a second face **2***g* of the housing **2**. For example, the TEC **15** is bonded to the second face **2***g* of the housing **2** by a fourth adhesive (not illustrated). The second face **2***g* is a face parallel to the first face **2***f*. For example, the second face **2***g* is located on the same plane as the first face **2***f*. For example, the first face **2***f* and the second face **2***g* are formed on the heat radiation plate **2***h*. For example, a second heat radiation block (second block) **19** is provided between the TEC **15** and the heat radiation plate **2***h*. However, the second heat radiation block **19** may be provided between the TEC **15** and the optical modulator **12**. In addition, the second heat radiation block **19** can be omitted. In addition, the number of the second heat radiation blocks **19** may be plural. The second heat radiation block **19** may be made of, for example, a metal or a ceramic. The TEC **15** is fixed to the second face **2***g* of the housing **2** by, for example, the fourth adhesive. The optical modulator **12** is fixed to the TEC **15** through the third adhesive. Therefore, the optical modulator **12** is fixed to the first face **2***f* of the housing **2** by the fourth adhesive, the TEC **15** and the third adhesive. The TEC **15** is sandwiched between the housing **2** and the optical modulator **12** in the direction D**3**. The TEC **15** releases heat absorbed from the optical modulator **12** to the housing **2** when cooling the optical modulator **12** and supplies heat absorbed from the housing **2** to the optical modulator **12** when heating the optical modulator **12**. The temperature of the optical modulator **12** can be maintained to be constant at a predetermined value by the TEC **15** heating or cooling the optical modulator **12** against the change in external temperature.

For example, the optical component **20** includes at least one of lenses, mirrors, beam splitters, and optical filters. The optical component **20** inputs and outputs the optical signals to and from the optical modulator **12**. The optical connector **3** is provided on one of the pair of first side walls **2***b*. The optical connector **3** inputs and outputs the optical signals to and from the optical component **20**. The optical connector **3** is, for example, a cylindrical sleeve that holds the optical fiber in the center. The end face of the optical fiber is exposed to the internal space **2**A. The optical connector **3** is optically coupled with the optical component **20**. For example, the CW light is input from the outside of the housing **2** to the optical modulator **12** through the optical connector **3** and the optical component **20**, and the optical transmission signal generated by the optical modulator **12** is output to the outside through the optical component **20** and the optical connector **3**. It is noted that, with respect to the directions, sometimes, the direction in which the light is output from the optical connector **3** to the outside of the housing **2** may be referred to as front, front side, or forward, and the direction opposite to front, front side, or forward may be referred to as back, back side, or backward. For example, the light output from the optical connector **3** to back, back side, or backward is input to the optical component **20**. In addition, for example, the pair of first side walls **2***b* has a front-side first side wall and a back-side first side wall in the direction D**1**. The optical connector **3** is provided on the front-side first side wall. However, these directions are for the convenience of description and do not limit the directions in which the components are arranged.

The housing **2** has electrical wirings **2**B. The electrical wiring **2**B is, for example, a feed-through electrical wiring that penetrates though the first side wall **2***b* (rear wall) on the rear side of the housing **2** while maintaining hermeticity (airtightness) of the internal space **2**A. A portion of the electrical wirings **2**B is exposed to the outside of the housing **2**. The plurality of electrical wirings **2**B are provided according to the electric signals input to the driver IC **11** and the power supply and the ground required for the operation of the driver IC **11**. The terminal **4** for electrical connection with an external device is provided at one end (one end outside the housing **2**) of each of the plurality of electrical wirings **2**B. For example, the terminals **4** provided on the plurality of electrical wirings **2**B are arranged so as to be aligned along the direction D**2**. A terminal **5** for electrical connection with the driver IC **11** is provided at the other end (one end inside the housing **2**) of each of the electrical wirings **2**B. For example, the terminals **5** provided on the plurality of electrical wirings **2**B are arranged so as to be aligned along the direction D**2**. The housing **2** has a fifth face **2***j* on which the electrical wiring **2**B is formed, and the terminals **4** and **5** are further provided on the fifth face **2***j*. The plurality of terminals **4** are electrically coupled to each other through the corresponding plurality of terminals **5** and the electrical wiring **2**B. Therefore, electrical signals can be exchanged between the outside and the inside (internal space **2**A) of the housing **2** through the electrical wiring **2**B. Similarly to the electric signals, a power supply voltage, a ground voltage (ground potential), and the like can be supplied to the driver IC and the optical modulator **12** in the internal space **2**A through the electrical wiring **2**B. The fifth face **2***j* is, for example, a face parallel to the first face **2***f*. Some of the plurality of terminals **5** in the internal space **2**A are electrically coupled to corresponding pads **11***b* of the driver IC **11** through a bonding wires **8***b*. The electrical wiring **2**B electrically coupled to the driver IC **11** may constitute the transmission line for transmitting high-speed electric signals. The driver IC **11** has a third face **11***d* on the opposite side of the first heat radiation block **13**, and the pads **11***b* are provided on the third face **11***d*. In addition, a circuit (not illustrated) of the driver IC **11** is also formed on the third face **11***d*. The third face **11***d* is also called a circuit face. The driver IC **11** has a substrate face opposite to the circuit face. The substrate face of the driver IC **11** is connected to the first face **2***f* through the first heat radiation block **13**. Therefore, the driver IC **11** is face-up mounted on the first face **2***f* so that the circuit face faces the opposite of the first face **2***f*.

The optical module **1** has a plurality of terminals **9***b* and a plurality of terminals **9***c* extending along the direction D**2** and exposed to the outside of the housing **2**. Each of the terminals **9***b* and **9***c* is exposed to the outside of the housing **2** on either one of the pair of second side walls **2***c*. For example, each of a plurality of the terminals **9***b* is electrically coupled to a pad **11***c* of the driver IC **11** through a bonding wire **8***c*. The pads **11***c* are provided on the third face **11***d* of the driver IC **11**. It is noted that the terminal **9***b* and the terminal **9***c* may be provided on only one of the pair of second side walls **2***c*. The terminals **9***b* and **9***c* are used to supply the power supply voltage, the ground potential, or relatively low-speed electrical signals to the driver IC **11**.

Each of the plurality of terminals **9***c* is electrically coupled to pads **12***b* of the optical modulator **12** through bonding wires **8***d*. The optical modulator **12** has a fourth face **12***d* opposite to the TEC **15**, and pads **12***b* and **12***c* are provided on the fourth face **12***d* of the optical modulator **12**.

In addition, a circuit (not illustrated) of the optical modulator **12** is also formed on the fourth face **12***d*. The fourth face **12***d* is also called a circuit face. As described above, the internal space **2**A of the optical module **1** is supplied with the electrical signal, the power supply voltage, the ground potential, or the like through the terminal **4** and the terminals **9***b* and **9***c*, and the electrical signal, the power supply voltage, and the ground potential are supplied to the driver IC **11** or the optical modulator **12** through the bonding wires **8***b*, **8***c*, and **8***d*.

The optical module **1** has an interconnection board **16** that electrically couples the driver IC **11** and the optical modulator **12** to each other. The board (base material) of the interconnection board **16** may be made of a material transmitting at least a portion of a wavelength range of the visible light. For example, the board (base material) of the interconnection board **16** is made of a glass. As the glass, for example, a soda lime glass, a borosilicate glass, a crystallized glass, and a quartz glass can be used. The main component of the glass is, for example, silicon dioxide (SiO_2) and may be a composition containing sodium (Na) or calcium (Ca). It is noted that the board (base material) may be made of a material (for example, silicon (Si)) not transmitting the visible light. It is preferable that the linear expansion coefficient of the interconnection board **16** is adjusted so that the difference from the linear expansion coefficient of the optical modulator **12** is small. Accordingly, the stress generated in a bonding portion between the interconnection board **16** and the optical modulator **12** when each portion is deformed due to the change in temperature is alleviated, and the deterioration of the bonding state and the change in the optical characteristics of the optical modulator **12** can be reduced. For example, when the optical modulator **12** is formed by using an InP compound semiconductor, the linear expansion coefficient is, for example, 4.5 ppm/° C. In consideration that the optical modulator **12** made of, for example, an InP compound semiconductor is controlled at a constant temperature by the TEC **15**, it is preferable that the linear expansion coefficient of the interconnection board **16** is in a range of 0 to 4.5 ppm/° C. It is preferable that the thermal conductivity of the interconnection board **16** is, for example, 5 W/(m·K) or less. It is noted that the thermal conductivity of the interconnection board **16** may be less than 3 W/(m·K) or even less than 1 W/(m·K). By allowing the thermal conductivity of the interconnection board **16** to be small, the heat inflow from the driver IC **11** to the optical modulator **12** can be reduced, and the change in the optical characteristics of the optical modulator **12** can be reduced. In addition, for example, the power consumption of the TEC **15** required to compensate for the temperature rise due to the heat inflow can be reduced.

The board of the interconnection board **16** may be made of, for example, a material having a lower thermal conductivity than glass. Moreover, the interconnection board **16** may be made of, for example, a resin. As the resin, for example, polyimide, epoxy, PTFE (polytetrafluoroethylene), or the like can be used. When the interconnection board **16** is made of a resin, the interconnection board **16** can be allowed to be flexible by reducing the thickness of the board (for example, 100 μm or less). Accordingly, when the temperature of the housing **2** changes, the stress generated in the bump connection portion described later can be alleviated by deforming the interconnection board **16**, and the electrical connection can be stabilized against the change in temperature. In particular, in the optical module **1**, since the structure (lower structure) between the driver IC **11** and the heat radiation plate **2***h* and the structure (lower structure) between the optical modulator **12** and the heat radiation plate **2***h* are different from each other, a difference occurs between the displacement of the connection portion of the interconnection board **16** with the driver IC **11** and the displacement of the connection portion of the interconnection board **16** with the optical modulator **12** when the temperature changes. There is a concern that difference may increase the stress applied to each connection. The interconnection board **16** is mounted on the driver IC **11** and the optical modulator **12**. An electrical wiring **16***b* is formed on the interconnection board **16**. The electrical wiring **16***b* is formed of, for example, a metal layer of gold or copper, and may be formed directly on the board of the interconnection board **16** or may be formed on the board of the interconnection board **16** through an insulating film. As the insulating film, for example, silicon dioxide (SiO_2) or polyimide may be used.

The electrical wiring **16***b* may be covered and protected with a passivation film. Pads **16***c* for connecting to the driver IC **11** or the optical modulator **12** are provided, for example, at both ends of the interconnection board **16**. The pads **16***c* of the interconnection board **16** may be configured as end portions of the electrical wirings **16***b* or may be configured by providing openings in the passivation film provided thereon. Moreover, surface treatment such as gold plating may be performed on the pads **16***c*. The face of the interconnection board **16** on which the electrical wiring **16***b* is formed faces circuit faces (the third face **11***d* and the fourth face **12***d*) of the driver IC **11** and the optical modulator **12**. Accordingly, the driver IC **11** and the optical modulator **12** are electrically coupled through bumps **17** described later. More specifically, the face of the interconnection board **16** on which the pads **16***c* are formed faces the heat radiation plate **2***h*. In addition, the face (circuit face) of the driver IC **11** on which the pads **11***b* are formed and the face (circuit face) of the optical modulator **12** on which pads **12***c* are formed face the direction opposite to the heat radiation plate **2***h*. Therefore, the interconnection board **16** is connected to the driver IC **11** and the optical modulator **12** so that the pads **16***c* of the interconnection board **16** face the driver IC **11** and the optical modulator **12**.

Such a mounting form in which the face of the interconnection board **16** on which the electrical wiring **16***b* and the pads **16***c* are formed faces downward (face down) to be connected is sometimes referred to as flip-chip assembly. For example, the transmission line is formed on the interconnection board **16** by the electrical wiring **16***b*. For example, the transmission line is configured as a coplanar line with four parallel wirings (GSSG wirings) extending along the direction D**1**. The GSSG wiring is configured with a ground wiring (G), a signal wiring (S), a signal wiring (S), and a ground wiring (G) arranged along the direction D**2**. The voltage of the ground wiring (G) is set to the ground potential. For example, a drive signal which is a differential signal is transmitted from the driver IC **11** to the optical modulator **12** through two central signal wires S and S. By transmitting the drive signal through the transmission line, the influence of the inductance of the signal wiring can be reduced, so that the frequency characteristics can be improved. It is preferable that the characteristic impedance of the transmission lines of the interconnection board **16** is substantially equal to the characteristic impedance of the transmission lines formed at the electrical signal output unit of the driver IC **11** and the electrical signal input unit of the optical modulator **12**. For example, the characteristic impedance of the interconnection board **16** may be adjusted within a relative error range of ±10% of the characteristic imped-

ances of the driver IC **11** and the optical modulator **12**. Accordingly, signal reflection occurring at a connection portion of the transmission line between the electrical signal output unit of the driver IC **11** and the interconnection board **16**, and at a connection portion of the transmission line between the interconnection board **16** and the electrical signal input unit of the optical modulator **12** can be reduced, and thus, high-quality signal transmission up to higher frequencies can be achieved.

The electrical wiring **16***b* constituting the transmission line may be configured with a single metal layer or may be configured with a plurality of metal layers stacked along the direction D**3**. For example, when the electrical wiring **16***b* is made of two or more metal layers, the insulating film insulating each metal layer may be formed between the metal layers. It is noted that, when the electrical wiring **16***b* is configured with two metal layers, the transmission line may be configured as, for example, a coplanar line with a ground layer. In the case, for example, the ground layer is formed with the metal layer close to the board (substrate) of the interconnection board **16**, and a coplanar line layer is formed with the metal layer far from the interconnection board **16**. The insulating film is formed between the ground layer and the coplanar line layer. Therefore, the metal layer that becomes the ground layer is arranged between the metal layer that becomes the coplanar line layer and the board (substrate) of the interconnection board **16**. In the coplanar line with the ground layer configured in this manner, the ground layer and the ground wiring provided in the coplanar line layer may be electrically coupled to each other through the through-holes provided in the insulating film.

The interconnection board **16** is arranged so as to straddle the driver IC **11** and the optical modulator **12** in the internal space **2**A of the housing **2**. For example, when the optical module **1** is viewed from the direction D**3**, the interconnection board **16** has portions overlapping the driver IC **11** and the optical modulator **12** respectively. The bumps **17** are sandwiched between the interconnection board **16** and the driver IC **11**, and between the interconnection board **16** and the optical modulator **12**, respectively, in each overlapping portion. The bumps **17** are, for example, gold stud bumps made of gold (Au). Specifically, the bumps **17** are provided between pads **11***f* of the driver IC **11** and the pads **16***c* of the interconnection board **16**, and between the pads **12***c* of the optical modulator **12** and the pads **16***c* of the interconnection board **16**, respectively. More specifically, the pad **16***c* is formed at one end of each of the four electrical wirings constituting the GSSG wiring described above. The pads **16***c* at one end thereof are connected to the driver IC **11** through the bumps **17**, respectively. In addition, the pad **16***c* is formed at the other end of each of the four electrical wirings. The pads **16***c* at the other ends are connected to the optical modulator **12** through the bumps **17**, respectively.

For example, the difference between a first distance K**1** between the first face **2***f* of the housing **2** and the third face **11***d* of the driver IC **11**, and a second distance K**2** between the first face **2***f* and the fourth face **12***d* of the optical modulator **12** is 50 μm or less. The value of the difference between the first distance K**1** and the second distance K**2** may be, for example, 40 μm or less. In addition, the value of the difference may be 30 μm or less or may be 20 μm or less. Furthermore, the value of the difference may be 10 μm or less. It is noted that, when the third face **11***d* is inclined, for example, by about 1° to 2° with respect to the first face **2***f*, the first distance K**1** is, for example, the shortest distance between the first face **2***f* and the third face **11***d*. In addition, when the fourth face **12***d* is inclined, for example, by about 1° to 2° with respect to the first face **2***f*, the second distance K**2** is, for example, the shortest distance between the first face **2***f* and the fourth face **12***d*.

As described in detail later, the difference between the first distance K**1** and the second distance K**2** can be allowed to be small by pressing the driver IC **11** against the second adhesive **14** before the second adhesive **14** which is thicker than the first adhesive **18** is cured. In the direction D**1**, the distance between the driver IC **11** and the optical modulator **12** (the shortest distance or gap between the edge (end face) of the driver IC **11** on the side of the optical modulator **12** and the edge (end face) of the optical modulator **12** on the side of the driver IC **11**), for example, may be, 100 μm or more, may be 200 μm or more, or may be 300 μm or more. By allowing the distance between the driver IC **11** and the optical modulator **12** to be large, the inclination of the interconnection board **16** with respect to the first face **2***f* of the housing **2** caused by the difference between the first distance K**1** and the second distance K**2** can be reduced. Further, by allowing the distance to be large, the thermal resistance of the interconnection board **16** between the driver IC **11** and the optical modulator **12** is reduced, and the heat inflow from the driver IC **11** to the optical modulator **12** can be reduced.

Next, a method of manufacturing the optical module according to the embodiment will be described. Hereinafter, a method of assembling the above-described optical module **1** will be described. First, as illustrated in FIG. **3**, a chip module M**1** is prepared by flip-chip assembling the driver IC **11** on the interconnection board **16** arranged upward on an assembly jig (not illustrated) (the process of preparing the chip module). Specifically, the driver IC **11** is assembled on the interconnection board **16** in which the bumps **17** are formed on the pads **16***c* by flip-chip assembly. At this time, the pads **11***f* of the driver IC **11** are bonded to the bumps **17**. The bonding between the bumps **17** and the pads **11***f* is performed, for example, by ultrasonic bonding or thermo-compression bonding. It is noted that the bumps **17** may be formed on the pads **11***f* of the driver IC **11** and may be bonded to the pads **16***c* of the interconnection board **16**. Since the bonding between the bumps **17** and the pads **11***f*, and the bonding between the bumps **17** and the pads **16***c* have a bonding strength enough to maintain the connection state, for example, after the flip-chip assembly, the upper face of the driver IC **11** is prevented from being inclined with respect to the upper face of the interconnection board **16**, when the two upper faces are connected to each other with the bumps **17**. However, in contrast with such an inclination, for example, a space around the bumps **17** between the pads **11***f* and **16***c* may be filled with an underfill resin to reinforce the bonding (bump bonding) by the bumps **17**. Accordingly, for example, an increase in inclination due to the weight of the driver IC **11** can be suppressed.

It is noted that, as illustrated in FIG. **16**, instead of the interconnection board **16**, an interconnection board **16**A of which length in the direction D**1** is larger than a length of the driver IC **11** may be prepared. The number of bumps **17** bonded to the driver IC **11** on the interconnection board **16**A can be two or more along the direction D**1**. As an example, the interconnection board **16**A has three bumps **17** when viewed from the side in the direction D**2**, and two of the three bumps **17** are bonded to the driver IC **11**. When assembling the driver IC **11** on the interconnection board **16**A by flip-chip assembly, the stability of the flip-chip assembly can be further improved. It is noted that any of the bumps **17** bonded to the driver IC **11** may be dummy bumps (bumps used to ensure mechanical strength and do not

contribute to electrical connection). The dummy bumps may be, for example, connected to the ground potential or electrically floating. It is noted that, when three or more bumps **17** are arranged along the direction D**1** in this manner, the pads **16***c* may be provided not only at both ends of the electrical wiring **16***b* but also in the middle of the electrical wiring **16***b*. Alternatively, in FIG. **16**, the three bumps **17** are formed on one electrical wiring **16***b*, but the left bump **17** in the figure may be formed to have a different electrical wiring from the electrical wiring on which the middle and right bumps **17** are formed.

As illustrated in FIG. **4**, the first heat radiation block **13** is bonded to the first face **2***f* of the housing **2** (heat radiation plate **2***h*) by the first adhesive **18** (the process of bonding the first heat radiation block). A paste that is cured by heating can be used as the first adhesive **18**. That is, the first adhesive **18** is applied to the first face **2***f*, the first heat radiation block **13** is mounted thereon, and the first heat radiation block **13** is pressed toward the first face **2***f*, and after that, the first adhesive **18** may be cured by heating. The thickness of the first adhesive **18** after curing is, for example, 10 μm. A gold-tin solder may be used as the first adhesive **18**. Next, the TEC **15** is mounted on the second face **2***g* of the housing **2** (heat radiation plate **2***h*) (the process of mounting the temperature control element). At this time, an adhesive (fourth adhesive) (not illustrated) is applied to the second face **2***g*, and after the TEC **15** is mounted thereon and is pressed against the first face **2***f*, the adhesive (not illustrated) may be cured by heating. In addition, the optical modulator **12** is bonded to the TEC **15** (the process of bonding the optical circuit element). Also at this time, the gold-tin solder may be used as an adhesive (not illustrated).

Then, the second adhesive **14** is applied to a face **13***b* of the first heat radiation block **13** opposite to the heat radiation plate **2***h* (the process of applying the second adhesive). For example, the volume of the second adhesive **14** applied at this time is larger than the volume of the first adhesive **18**. It is noted that, herein, it is assumed that the area of the face **13***b* is equal to the area of the face bonded to the first face **2***f* of the first heat radiation block **13**. More specifically, the thickness of the second adhesive **14** is larger than the thickness of the first adhesive **18** in the direction D**3**. In addition, the chip module M**1** is held at a predetermined height T from the first face **2***f* and the second face **2***g*. The value of height T is larger than a value of the second distance K**2**. For example, the chip module M**1** held at the height T may be located outside the housing **2** on which the second heat radiation block **13** and the TEC **15** are mounted. It is preferable that the process of applying the second adhesive is after the process of bonding the first heat radiation block, the process of mounting the temperature control element, and the process of bonding the optical circuit element.

As illustrated in FIG. **5**, the chip module M**1** held at a predetermined height T is assembled on the optical modulator **12** by flip-chip assembly, and the driver IC **11** is pressed against the second adhesive **14** (pressing process). For example, downward pressure is applied to the second adhesive **14** through the driver IC **11**. Accordingly, the driver IC **11** and the optical modulator **12** are electrically coupled through the interconnection board **16** while the difference between the first distance K**1** and the second distance K**2** is suppressed to be small. Then, the second adhesive **14** is cured by heating the second adhesive **14** (the process of curing the second adhesive).

It is noted that, after the process of pressing, the second adhesive remains uncured until the process of curing the second adhesive is completed. However, since the bonding between the bumps **17** and the pads **12***c*, and the bonding between the bumps **17** and the pads **16***c* have a sufficient bonding strength to maintain the connection state, for example, after the flip-chip assembly, the interconnection board **16** is prevented from being inclined with respect to the optical modulator **12**, when the interconnection board **16** is connected to the optical modulator **12** with the bumps **17**. For this reason, it is unlikely that the thickness of the second adhesive **14** will change significantly after the process of pressing until the process of curing the second adhesive is completed. Alternatively, the chip module M**1** may be held by a holding tool in order to maintain the first distance K**1** and suppress the change in the thickness of the second adhesive **14** during the curing. It is noted that, in order to reduce the inclination of the interconnection board **16**, a periphery of the bumps **17** between the pads **12***c* and **16***c* may be filled with, for example, an underfill resin to reinforce the bump bonding.

Herein, the thickness of the driver IC **11** is, for example, 0.1 to 0.5 mm. The thickness of the optical modulator **12** is, for example, 0.1 to 0.5 mm. The thickness of the first heat radiation block **13** is, for example, 1.0 to 2.0 mm. The thickness of the TEC **15** is, for example, 1.0 to 2.0 mm. It is noted that these dimensions indicate the range of central values (design values). The actual thicknesses of these members have variations (manufacturing variation) in manufacturing with respect to the central value. The manufacturing variation depends on the configuration of each member, the manufacturing method, and the like. Therefore, when the sum of the thicknesses of the cured first adhesive **18**, the first heat radiation block **13**, and the driver IC **11** is set as a third distance K**3**, it is preferable that the thickness of the second adhesive **14** approximates a value obtained by subtracting the third distance K**3** from the second distance K**2** between the first face **2***f* and the fourth face **12***d*.

In addition, when considering the manufacturing variation in the thickness of each member described above, the maximum value of the thickness of the cured second adhesive **14** is equal to a value obtained by subtracting the minimum value of the third distance K**3** from the maximum value of the second distance K**2**, and the minimum thickness of the cured second adhesive **14** is equal to a value obtained by subtracting the maximum value of the third distance K**3** from the minimum value of the second distance K**2**. Furthermore, it is preferable that the thickness of the second adhesive **14** is set to have a value added with a margin so as to absorb the inclination between the upper face of the interconnection board **16** and the upper face of the driver IC **11** that may occur in the process of preparing the chip module M**1**, and the inclination between the upper face of the interconnection board **16** and the upper face of the optical modulator **12** that may occur in the process of pressing.

Finally, the thickness of the second adhesive **14** after the process of curing the second adhesive **14** (refer to FIG. **5**) is, for example, 10 to 300 μm (when the thickness of the second adhesive **14** is not uniformed in-plane, the thickness of the thinnest portion is set as the thickness of the cured second adhesive **14**). The minimum thickness of the cured second adhesive **14** is preferably 50 μm or less, but may be 40 μm or less, or may be even 30 μm or less. In addition, the minimum thickness may be 10 μm. It is noted that, in order to suppress the heat resistance of the second adhesive **14** to be low, it is preferable that the thickness of the second adhesive **14** is small. In the manner, by adjusting the thickness of the second adhesive **14** during the pressing process, the difference between the first distance K**1** and the

second distance K2 can be suppressed to be small, and more reliable connection of the interconnection board **16** to the driver IC **11** and the optical modulator **12** can be expected with respect to the manufacturing variation described above.

The amount of the second adhesive **14** to be applied in the process of applying the second adhesive is adjusted so that the thickness of the uncured second adhesive **14** after the application is, for example, 300 μm or more. In the case, as illustrated in FIGS. **17** and **18**, a groove **13***c* may be formed on the face **13***b* of the first heat radiation block **13** to allow the excess second adhesive **14** to escape into the inside of the first heat radiation block **13** during the pressing process. In addition, as illustrated in FIGS. **19** and **20**, an embankment wall **13***d* may be formed on the face **13***b* of the first heat radiation block **13** to prevent the excess second adhesive **14** from overflowing into the surroundings in the pressing process. In the configurations illustrated in FIGS. **2**, **7**, and **12**, the groove **13***c* or the embankment wall **13***d* may prevent the excess second adhesive **14** extruded by the driver IC **11** in the pressing process from excessively protruding in the direction D**1** or D**2** and may prevent the excess second adhesive **14** from being in contact with, for example, the optical modulator **12** and the TEC **15**. For example, the number of grooves **13***c* and the width and depth of each groove may be set according to the amount of the second adhesive **14** to be applied. In addition, the height of the embankment wall **13***d* relative to the face **13***b* may be set according to the amount of the second adhesive **14** to be applied. Before applying the second adhesive **14**, the amount of the second adhesive **14** to be applied may be adjusted by detecting the difference in height between the face **13***b* of the first heat radiation block **13** and the fourth face **12***d* of the optical modulator **12** (also in consideration of the thickness of the driver IC **11**). Herein, for example, even if the thickness of the second adhesive **14** is 300 μm, when the thermal conductivity of the second adhesive **14** is 10 W/(m·K), if the area of the driver IC **11** is, for example, 5 mm×3 mm, the thermal resistance of the second adhesive **14** becomes 2 K/W. At this time, even if the amount of heat generated by the driver IC **11** is, for example, 3 W, the temperature rise due to the thermal resistance of the second adhesive **14** can be suppressed to 6° C., and the operation temperature of the driver IC **11** can be suppressed within a predetermined range.

Next, the functions and effects obtained from the optical module **1** and the method of manufacturing the optical module according to the embodiment will be described. In the optical module **1** and the method of manufacturing the optical module according to the embodiment, the first heat radiation block **13** is placed on the first face **2***f* of the housing **2**, and the TEC **15** is placed on the second face **2***g* of the housing **2**. The interconnection board **16** is mounted on the driver IC **11** and the optical modulator **12**.

A space between the driver IC **11** and the first heat radiation block **13** is filled with the second adhesive **14**. The thickness of the second adhesive **14** is larger than the thickness of the first adhesive **18**. By pressing the driver IC **11** against the second adhesive **14**, the height (first distance K**1**) of the third face **11***d* of the driver IC **11** can approximate the height (second distance K**2**) of the fourth face **12***d* of the optical modulator **12** in the direction D**3**. Therefore, since the interconnection board **16** can be appropriately placed while the inclination is suppressed with respect to the driver IC **11** and the optical modulator **12**, the interconnection board **16** can be reliably connected to the driver IC **11** and the optical modulator **12**, respectively.

The interconnection board **16** may be mounted on the third face **11***d* of the driver IC **11** and on the fourth face **12***d* of the optical modulator **12**. The thickness of the second adhesive **14** may be 10 μm or more. In the case, the interconnection board **16** can be more reliably connected to each of the driver IC **11** and the optical modulator **12**.

The second adhesive **14** may be a silver paste. Accordingly, the heat resistance of the second adhesive **14** can be suppressed to be low, and the Joule heat generated by the driver IC **11** can be effectively released to the heat radiation plate **2***h* of the housing **2**. It is noted that a conductive adhesive having a thermal conductivity of 10 W/(m·K) or more may be used instead of the silver paste.

The interconnection board **16** may be made of a material transmitting at least a portion of the wavelengths within the wavelength range of visible light. In the case, at least one of the driver IC **11**, the optical modulator **12**, and the second adhesive **14** can be visually recognized with the light transmitting through the interconnection board **16**. For example, when there is a defect in each connection state, the defect can be detected by visual inspection. The visible light transmittance of the interconnection board **16** is preferably, for example, 50% or more.

The housing **2** may have the heat radiation plate **2***h*. The first face **2***f* and the second face **2***g* may be formed on the heat radiation plate **2***h*. In the case, the property of the heat radiation from each of the first heat radiation block **13** placed on the first face **2***f* and the TEC **15** placed on the second face **2***g* can be further enhanced.

The board of the interconnection board **16** may be made of a glass. In the case, the thermal resistance of the interconnection board **16** can be increased, and the heat inflow from the driver IC **11** to the optical modulator **12** can be reduced. Accordingly, the change in the optical characteristics of the optical modulator **12** can be reduced. In addition, the power consumption of the temperature control element **15** required to compensate for the temperature rise due to the heat inflow can be reduced.

The optical module **1** may include the second heat radiation block **19** contacted to the TEC **15**. Accordingly, the second distance K**2** between the first face **2***f* and the fourth face **12***d* can be allowed to easily approximate the first distance K**1** between the first face **2***f* and the third face **11***d* according to the thickness of the TEC **15**.

In the method of manufacturing the optical module according to the embodiment, in the above-described pressing process, the driver IC **11** be pressed against the uncured second adhesive **14** so that the height difference between the third face **11***d* of the driver IC **11** and the fourth face **12***d* of the optical modulator **12** is reduced. In the case, since the thickness of the uncured second adhesive **14** is 10 μm or more even in consideration of the manufacturing variation, the interconnection board **16** can be more reliably connected to each of the driver IC **11** and the optical modulator **12**.

It is noted that the method of assembling the optical module **1** is not limited to the above method. For example, after the process of bonding the first heat radiation block, the process of mounting the temperature control element, and the process of bonding the optical circuit element, the process of applying the second adhesive is performed, and the single driver IC **11** is mounted on the second adhesive to cure the second adhesive by heating. When mounting the driver IC **11**, it is preferable that the jig or device used for assembling the optical module **1** is controlled so that the height of the third face **11***d* of the driver IC **11** is approximately equal to the height of the fourth face **12***d* of the optical modulator **12**. As a result, it is preferable that the

difference between the first distance K1 between the first face **2***f* and the third face **11***d*, and the second distance K2 between the first face **2***f* and the fourth face **12***d* is 50 μm or less. After the second adhesive **14** is cured, the interconnection board **16** may be assembled on the third face **11***d* of the driver IC **11** and on the fourth face **12***d* of the optical modulator **12** by flip-chip assembly.

Alternatively, first, the chip module M1 may be prepared by assembling the driver IC **11** and the optical modulator **12** on the interconnection board **16** by flip-chip assembly (the process of preparing the chip module). In addition, after the process of bonding the first heat radiation block and the process of mounting the temperature control element, the second adhesive **14** is applied on the first heat radiation block **13**, and the third adhesive may be also applied on the TEC **15** (the process of applying the second adhesive). By mounting the chip module M1 on the housing **2**, the driver IC **11** may be pressed against the uncured second adhesive **14** toward the first heat radiation block **13**, and the optical modulator **12** may be pressed against the uncured third adhesive (pressing process). Finally, the second adhesive **14** and the third adhesive may be heated to cure the second adhesive **14** and the third adhesive. The material constituting the third adhesive may be the same as or different from the material constituting the second adhesive **14**. In the pressing process, the optical modulator **12** may be pressed against the third adhesive until the thickness of the third adhesive becomes sufficiently small. Accordingly, compared to the case where the optical modulator **12** is bonded to the TEC **15** in advance, the inclination of the driver IC **11** with respect to the face **13***b* of the first heat radiation block **13** can be suppressed, and the thickness of the second adhesive **14** can be made uniform.

Next, an optical module **1**A according to Modified Example 1 will be described with reference to FIGS. **6** and **7**. FIG. **6** is a plan view illustrating a structure of the optical module **1**A. FIG. **7** is a longitudinal sectional view of the optical module **1**A. A portion of the configuration of the optical module **1**A is the same as a portion of the configuration of the optical module **1** described above. Therefore, in the following description, the portions that overlap with the configuration of the optical module **1** are denoted by the same reference numerals, and the description thereof will be omitted as appropriate.

The optical module **1**A has an interconnection board **26** that is larger than the interconnection board **16**. When viewed along the direction D**3**, an area of the interconnection board **26** is larger than, for example, a sum of an area of the driver IC **11** and an area of the optical modulator **12**. When viewed along the direction D**3**, the interconnection board **26** may be arranged, for example, so as to cover the driver IC **11** and the optical modulator **12**. Therefore, the length of the interconnection board **26** in the direction D**1** is larger than the length of the interconnection board **16** in the direction D**1**. A plurality of bumps **27** are formed on each of the driver IC **11** and the optical modulator **12**. The interconnection board **26** has a face (circuit face) **26***b* facing the driver IC **11** and the optical modulator **12**. An electrical wiring **26***e* is formed on the face **26***b* of the interconnection board **26**, and a plurality of pads **26***c* are provided on the electrical wiring **26***e*. Each pad **26***c* is electrically coupled to the driver IC **11** or the optical modulator **12** through the bumps **27**.

A plurality of pads **26***f* are provided on a face **26***d* of the interconnection board **26** opposite to the face **26***b*. The interconnection board **26** has vias **26***g* penetrating the interconnection board **26** along the direction D**3** from the pads **26***f* to extend to the pads **26***c*. The via **26***g* is called a through-via or a penetrating-via and is called a TGV (Through Glass Via) especially when the interconnection board **26** is made of a glass. The pad **26***f* is electrically coupled to the pad **26***c* through the via **26***g*. Some of a plurality of the pads **26***f* are electrically coupled to the terminals **5** through the bonding wires **8***b*. A plurality of the remaining pads **26***f* are electrically coupled to the terminals **9***b* and **9***c* through bonding wires **8***f*. It is noted that, in FIG. **7**, for simplification of illustration, some of the pads **26***c*, the bumps **27**, and the pads **26***f* drawings are omitted. It is noted that the terminals **9***b* and **9***c* may be provided on only one of the pair of second side walls **2***c*. In FIG. **7**, the pads **26***c* and the bumps **27** that are not hatched represent an example of the configuration of the dummy bumps. The dummy bumps are provided as necessary to reinforce the mechanical connection between the interconnection board **26** and the optical modulator **12**. Since the dummy bumps are not used to transmit signals or configure circuits, the dummy bumps may be connected to the ground wiring or may be electrically floating.

A method of manufacturing the optical module **1**A according to Modified Example 1 will be described. First, as illustrated in FIG. **8**, a chip module M**2** is prepared by assembling the driver IC **11** on the interconnection board **26** arranged upward on an assembly jig (not illustrated) by flip-chip assembly (the process of preparing a chip module). At this time, the driver IC **11** is assembled on the interconnection board **26** by flip-chip assembly with the vias **26***g* in which the bumps **27** are fixed to the pads **26***c*. The bumps **27** are, for example, gold stud bumps made of Au. At this time, the bumps **27** formed on the pads **26***c* are bonded to the pads **11***f* of the driver IC **11**. The bonding is performed, for example, by ultrasonic bonding or thermocompression bonding. It is noted that the bumps **27** may be formed on the pads **11***f* of the driver IC **11** and may be bonded to the pads **26***c* of the interconnection board **26**.

As illustrated in FIG. **9**, the first heat radiation block **13** is bonded to the first face **2***f* of the housing **2** with the first adhesive **18** (the process of bonding the first heat radiation block), the TEC **15** is mounted on the second face **2***g* of the housing **2** (the process of mounting the temperature control element), and the optical modulator **12** is bonded to the TEC **15** (the process of bonding the optical circuit element). It is noted that adhesives are used to mount the TEC **15** on the second face **2***g* and to bond the optical modulator **12** to the TEC **15**, but these are omitted from the drawing. As the adhesive, for example, gold-tin solder may be used. Then, the second adhesive **14** is applied to the face **13***b* of the first heat radiation block **13** (the process of applying the second adhesive).

As illustrated in FIG. **10**, the chip module M**2** is assembled on the optical modulator **12** by flip-chip assembly, and the driver IC **11** is pressed against the second adhesive **14** (pressing process). Then, the second adhesive **14** is heated to cure the second adhesive **14** (the process of curing the second adhesive). It is noted that, in FIGS. **8**, **9**, and **10**, the dummy bumps illustrated in FIG. **7** are omitted.

As described above, in the optical module **1**A according to Modified Example 1, each of the driver IC **11** and the optical modulator **12** has a plurality of bumps **27** formed along the direction D**1**. The interconnection board **26** is connected to each of the driver IC **11** and the optical modulator **12** through the plurality of bumps **27**. In the optical module **1**A, since the interconnection board **26** has the plurality of bumps **27** and the interconnection board **26** is mounted so as to cover the driver IC **11** and the optical

modulator **12**, the connection of the interconnection board **26**, and the driver IC **11** and the optical modulator **12** is reinforced, and the stability of individual bump connections can be improved. Since the interconnection board **26** has the plurality of bumps **27**, the inclination between the upper face of the interconnection board **26** and the upper face of the driver IC **11** facing each other, and the inclination between the upper face of the interconnection board **26** and the upper face of the optical modulator **12** facing each other are hard to occur, and the interconnection board **26** can be more reliably connected to each of the driver IC **11** and the optical modulator **12**. For example, by reducing the inclination, the stress exerted on the bonding between the individual bump and the pad can be distributed so as to be uniform.

Next, an optical module **1**B according to Modified Example 2 will be described with reference to FIGS. **11** and **12**. FIG. **11** is a plan view illustrating the structure of the optical module **1**B. FIG. **12** is a longitudinal sectional view of the optical module **1**B. The optical module **1**B has a third adhesive **34** filled between the TEC **15** and the optical modulator **12** and an interconnection board **36** which is even larger than the interconnection board **26**. The third adhesive **34** is, for example, a silver paste. The third adhesive **34** is, for example, a paste when applied, but the third adhesive **34** is in a state of being cured by heating or the passage of time. The thermal conductivity in the cured state is, for example, preferably 1 W/(m·K) or more, more preferably 10 W/(m·K) or more. Accordingly, the thermal resistance of the third adhesive **34** can be suppressed to be low, and the difference between the temperature of the optical modulator **12** and the temperature of a face (temperature control face) **15***b* of the TEC **15** can be reduced within a predetermined range. As a result, by stabilizing the temperature of the optical modulator **12** against the change in external temperature, the change in optical characteristics of the optical modulator **12** can be reduced. The third adhesive **34** may have electrical conductivity as well as thermal conductivity. As the third adhesive **34**, for example, an adhesive containing metal particles or ceramic fillers, a silicone-based adhesive, a paste containing metal nanoparticles such as gold, silver, or copper, a gold-tin alloy paste, or a solder paste (cream solder) may be used.

For example, the thickness of the third adhesive **34** is larger than the thickness of the first adhesive **18**.

The interconnection board **36** is arranged so as to cover the driver IC **11** and the optical modulator **12** as well as a portion of the electrical wiring **2**B of the housing **2** when viewed along the direction D**3**. The interconnection board **36** is assembled on the fifth face **2***j* of the housing **2** by flip-chip assembly. The interconnection board **36** can electrically couple the housing **2**, the driver IC **11**, and the optical modulator **12** to each other. Bumps **37** are formed on each of the driver IC **11**, the optical modulator **12**, and the electrical wiring **2**B. The bumps **37** are, for example, gold stud bumps made of Au.

The interconnection board **36** has a face (circuit face) **36***b* facing the driver IC **11**, the optical modulator **12**, and the electrical wiring **2**B. An electrical wiring **36***e* is formed on the face **36***b* of the interconnection board **36**, and a plurality of pads **36***c* are provided on the electrical wiring **36***e*. Each pad **36***c* is electrically coupled to any one of the driver IC **11**, the optical modulator **12**, and the electrical wiring **2**B through the bumps **37**. It is noted that the optical module **1**B does not have the bonding wires **8***b* (refer to FIG. **7**) for electrically coupling the driver IC **11** and the terminals **4** of the electrical wiring **2**B to each other. In FIG. **12**, the pads **36***c* and the bumps **37** that are not hatched indicate an example of the configuration of the dummy bumps. The dummy bumps are provided as necessary to reinforce the mechanical connection between the interconnection board **36** and the optical modulator **12**. Since the dummy bumps are not used to transmit signals or constitute circuits, the dummy bumps may be connected to the ground wiring or may be electrically floating.

The method of manufacturing the optical module **1**B will be described. First, as illustrated in FIG. **13**, a chip module M**3** is prepared by assembling the driver IC **11** and the optical modulator **12** on the interconnection board **36** arranged upward on an assembly jig (not illustrated) by flip-chip assembly (the process of preparing the chip module). At this time, the driver IC **11** and the optical modulator **12** are assembled on the interconnection board **36** having the bumps **37** formed on the pads **36***c* by flip-chip assembly. At this time, the bumps **37** formed on the pad **36***c* are bonded to any one of the pad **11***f* of the driver IC **11** and the pad **12***c* of the optical modulator **12**. The bonding is performed, for example, by ultrasonic bonding or thermal compression bonding. It is noted that the bumps **37** may be formed on the pads **11***f* of the driver IC **11** and the pads **12***c* of the optical modulator **12** and may be bonded to the pads **36***c* of the interconnection board **36**.

As illustrated in FIG. **14**, the first heat radiation block **13** is bonded to the first face **2***f* of the housing **2** by the first adhesive **18** (the process of bonding the first heat radiation block), and the TEC **15** is mounted on the second face **2***g* of the housing **2** (the process of mounting the temperature control element). The second adhesive **14** is applied to the face **13***b* of the first heat radiation block **13** (the process of applying the second adhesive). Then, the third adhesive **34** is applied to the face **15***b* of the TEC **15** facing the other side from the housing **2** (in particular, the heat radiation plate **2***h*).

As illustrated in FIG. **15**, the chip module M**3** is mounted on the terminals **5** of the electrical wiring **2**B, the optical modulator **12** is pressed against the third adhesive **34**, and the driver IC **11** is pressed against the second adhesive **14** (pressing process). Then, the second adhesive **14** and the third adhesive **34** are heated to cure the second adhesive **14** and the third adhesive **34** (the process of curing the second adhesive). It is noted that, in FIGS. **13**, **14**, and **15**, the dummy bumps illustrated in FIG. **12** are omitted.

Herein, a fourth distance (indicated by K**4**) between the fifth face **2***j* and the first face **2***f* of the housing **2** is, for example, 1.5 to 2.5 mm. The thickness of the driver IC **11** is, for example, 0.1 to 0.5 mm. The thickness of the optical modulator **12** is, for example, 0.1 to 0.5 mm. The thickness of the first heat radiation block **13** is, for example, 1.0 to 2.0 mm. The thickness of the TEC **15** is, for example, 1.0 to 2.0 mm. It is noted that these dimensions indicate the range of central values (design values). The actual thicknesses of these members have variations (manufacturing variation) in manufacturing with respect to the central value. The manufacturing variation depends on the configuration of each member, the manufacturing method, and the like. Therefore, when the sum of the thicknesses of the cured first adhesive **18**, the first heat radiation block **13**, and the driver IC **11** is set as a third distance K**3**, it is preferable that the thickness of the cured second adhesive **14** approximates a value obtained by subtracting the third distance K**3** from the fourth distance K**4** between the fifth face **2***j* and the first face **2***f* of the housing **2**. Similarly, when the sum of the thicknesses of the TEC **15** and the optical modulator **12** is set as a fifth distance K**5**, it is preferable that the thickness of the cured third adhesive **34** approximates a value obtained by subtracting the fifth distance K**5** from the fourth distance K**4**

between the fifth face **2***j* and the first face **2***f* of the housing **2**. It is noted that, the fifth distance K**5** may include a thickness of the adhesive used when mounting the TEC **15** on the second face **2***g* of the housing **2**.

In addition, when considering the manufacturing variation in the thickness of the members described above, the maximum thickness of the cured second adhesive **14** is a value obtained by subtracting the minimum value of the third distance K**3** from the maximum value of the fourth distance K**4**, and the minimum thickness of the cured second adhesive **14** is equal to a value obtained by subtracting the maximum third distance K**3** from the minimum fourth distance K**4**. Similarly, the maximum thickness of the third adhesive **34** is equal to a value obtained by subtracting the minimum fifth distance K**5** from the maximum fourth distance K**4**, and the minimum thickness of the third adhesive **34** is equal to a value obtained by subtracting the maximum value of the fifth distance K**5** from the minimum value of the fourth distance K**4**. Furthermore, it is preferable that the thickness of the second adhesive **14** may be added with a margin so as to absorb the inclination between the upper face of the interconnection board **16** and the upper face of the driver IC **11** that may occur in the process of preparing the chip module, and the inclination between the upper face of the interconnection board **16** and the first face **2***f* that may occur in the pressing process. Similarly, it is preferable that the thickness of the third adhesive **34** may be added with a margin so as to absorb the inclination between the upper face of the interconnection board **16** and the upper face of the optical modulator **12** that may occur in the process of preparing the chip module, and the inclination between the upper face of the interconnection board **16** and the first face **2***f* that may occur in the pressing process.

When the assembly of the optical module M**3** is finally completed, the thickness of the second adhesive after the process of curing the second adhesive (refer to FIG. **15**) is, for example, 10 to 100 μm (when the thickness of the second adhesive is not uniform in the plane, the thickness of the thinnest portion is set as the thickness of the second adhesive). The thickness of the third adhesive after the process of curing the second adhesive is, for example, 10 to 300 μm (when the thickness of the third adhesive is not uniform in the plane, the thickness of the thinnest portion is set as the thickness of the third adhesive). The thickness variation of the third adhesive is larger than that of the second adhesive, generally, because the thickness variation of the TEC **15** is large. The minimum thickness of the cured second adhesive **14** is preferably 50 μm or less, but may be 40 μm or less, or may be even 30 μm or less. Alternatively, the minimum thickness may be 10 μm. It is noted that, in order to suppress the heat resistance of each of the second adhesive and the third adhesive to be low, it is preferable that the thickness of each of the second adhesive and the third adhesive is small during the curing. In the manner, by adjusting the thickness of each of the second adhesive and the third adhesive during the pressing process, the connection between the interconnection board **16** and the housing **2**, the connection between the interconnection board **16** and the driver IC **11**, and the connection between the interconnection board **16** and the optical modulator **12** are formed more stably with respect to the manufacturing variation described above.

In the optical module **1**B, since the interconnection board **16** is mounted on the electrical wiring **2**B of the housing **2**, the difference between the first distance K**1** between the first face **2***f* of the housing **2** and the third face **11***d* of the driver IC **11**, and the second distance K**2** between the first face **2***f* and the fourth face **12***d* of the optical modulator **12** is likely to be small. Accordingly, the connection between the interconnection board **16** and the housing **2**, the connection between the interconnection board **16** and the driver IC **11**, and the connection between the interconnection board **16** and the optical modulator **12** are formed more stably.

As described above, in the optical module **1**B according to Modified Example 2, the housing **2** has the fifth face **2***j* parallel to the first face **2***f*, and the interconnection board **36** is assembled on the fifth face **2***j* by flip-chip assembly. The interconnection board **36** can electrically couple the housing **2**, the driver IC **11**, and the optical modulator **12** to each other, and a space between the TEC **15** and the optical modulator **12** is filled with the third adhesive **34**. Therefore, the electrical wiring **2**B of the housing **2** and the driver IC **11** can be electrically coupled to each other through the electrical wiring **36***b* formed on the interconnection board **36**. Therefore, by transmitting an electric signal (drive signal) through the transmission line formed by the electrical wiring **36***b*, the bonding wire **8***b* from the housing **2** to the driver IC **11** can be allowed to be unnecessary, and thus, the parasitic inductance is suppressed, and the characteristic of the high frequency of the drive signal can be made even better.

Heretofore, the embodiments and various modifications according to the present disclosure have been described. However, the present invention is not limited to the above-described embodiments or various modifications, and can be appropriately changed within the scope of spirit of the claims. In addition, the optical module according to the present disclosure may be a combination of a plurality of examples of the above-described embodiments, Modified Example 1, and Modified Example 2. For example, in the above-described embodiments, the optical module **1**, which is an optical transmitter module, has been described. However, the optical module may not be an optical transmitter module, but may be, for example, an optical receiver module.

For example, in the optical receiver module, a trans-impedance amplifier IC (TIA) instead of the driver IC in the configuration of FIG. **2**, a light reception element PD instead of the optical modulator **12**, a first block instead of a first heat radiation block **13**, and a second block instead of the TEC may be used. In addition, materials with low thermal conductivity may be used for the first adhesive **18** and the second adhesive **14**. With such a configuration, a reception signal (for example, photocurrent) generated by the light reception element PD can be transmitted to the TIA through the interconnection board **16**. Parasitic inductance can be reduced by transmitting the electrical signals through the transmission line formed on the interconnection board **16**, and the reception performance of the optical receiver module can be improved. The first block and the second block may be made of an insulating material. In addition, the first adhesive and the second adhesive may each have an insulating property.

Hereinafter, the configuration of the optical module according to the embodiment will be listed again as additional notes.

APPENDIX

An optical module including:

a housing having a first face and a second face parallel to the first face;

a trans-impedance IC mounted on the first face via a first block;

a light reception element mounted on the second face via a second block;

an interconnection board mounted on the trans-impedance IC and the light reception element and electrically coupled to the trans-impedance IC and the light reception element,

wherein the first block is bonded to the first face by a first adhesive,

wherein the trans-impedance IC is bonded to the first block by a second adhesive, and

wherein the second adhesive has a thickness larger than a thickness of the first adhesive.

What is claimed is:

1. An optical module comprising:

a housing having a first face and a second face parallel to the first face;

a first block fixed to the first face of the housing by a first adhesive;

an integrated circuit (IC) fixed to the first block by a second adhesive having a thickness larger than a thickness of the first adhesive;

a thermoelectric cooler (TEC) fixed to the second face of the housing;

an optical circuit element fixed to the TEC; and

an interconnection board mounted on the IC and the optical circuit element, the interconnection board being configured to electrically couple the IC to the optical circuit element;

wherein the first block is sandwiched between the housing and the IC, and

wherein the TEC is sandwiched between the housing and the optical circuit element.

2. The optical module according to claim **1**,

wherein the IC has a third face opposite to the first block,

wherein the optical circuit element has a fourth face opposite to the TEC,

wherein the interconnection board is mounted on the third face of the IC and the fourth face of the optical circuit element, and

wherein the second adhesive has a thickness of 10 micrometers or more.

3. The optical module according to claim **1**,

wherein the second adhesive is silver paste.

4. The optical module according to claim **1**,

wherein the interconnection board allows visible light to transmit through the interconnection board.

5. The optical module according to claim **1**,

wherein the housing has a fifth face parallel to the first face,

wherein the interconnection board is further mounted on the fifth face and electrically couples the housing to one of the IC and the optical circuit element, and

wherein the optical module further includes a third adhesive between the TEC and the optical circuit element.

6. The optical module according to claim **1**,

wherein the housing includes a heat radiation member and the heat radiation member has the first face and the second face.

7. The optical module according to claim **1**,

wherein the IC has a plurality of bumps the optical circuit element has a plurality of bumps,

wherein the interconnection board is electrically coupled to the IC through one of the bumps of the IC, and

wherein the interconnection board is electrically coupled to the optical circuit element through one of the bumps of the optical circuit element.

8. The optical module according to claim **1**,

wherein the interconnection board is constituted of glass.

9. The optical module according to claim **1**, further comprising a second block touching the TEC.

10. A manufacturing method of an optical module comprising:

bonding a first block to a first face of a housing by a first adhesive;

mounting a thermoelectric cooler (TEC) on a second face of the housing;

preparing a chip module by assembling an integrated circuit (IC) on an interconnection board by flip-chip assembly;

applying a second adhesive on the first block bonded on the first face of the housing, the second adhesive having a thickness larger than a thickness of the first adhesive;

mounting an optical circuit element on the TEC mounted on the second face of the housing;

pressing the IC against the second adhesive and mounting the chip module on the optical circuit element by flip-chip assembly, after holding the chip module at a predetermined height from one of the first face and the second face; and

curing the second for bonding the IC to the first block.

11. A manufacturing method of an optical module comprising:

bonding a first block to a first face of a housing by a first adhesive;

mounting a thermoelectric cooler (TEC) on a second face of the housing;

preparing a chip module by assembling an integrated circuit (IC) and an optical circuit element on an interconnection board by flip-chip assembly;

applying a second adhesive on the first block bonded on the first face of the housing, the second adhesive having a thickness larger than a thickness of the first adhesive;

applying a third adhesive on the TEC mounted on the second face of the housing;

pressing the IC against the second adhesive and simultaneously pressing the optical circuit element against the third adhesive, after holding the chip module at a predetermined height from one of the first face and the second face; and

curing the second adhesive and the third adhesive for bonding the chip module to the first block and the TEC.

* * * * *