US012402569B2

(12) **United States Patent**
Vadnere et al.

(10) **Patent No.: US 12,402,569 B2**
(45) **Date of Patent: Sep. 2, 2025**

(54) **AUTOMATED LAST BALE EJECTION SEQUENCE FOR BALER IMPLEMENT**

(71) Applicant: **DEERE & COMPANY**, Moline, IL (US)

(72) Inventors: **Mohan A. Vadnere**, Pune (IN); **Umesh B. Jadhao**, Pune (IN)

(73) Assignee: **DEERE & COMPANY**, Moline, IL (US)

(*) Notice: Subject to any disclaimer, the term of this patent is extended or adjusted under 35 U.S.C. 154(b) by 547 days.

(21) Appl. No.: **18/045,681**

(22) Filed: **Oct. 11, 2022**

(65) **Prior Publication Data**

US 2024/0114843 A1 Apr. 11, 2024

(51) **Int. Cl.**
A01F 15/08 (2006.01)
A01F 15/04 (2006.01)
A01F 15/14 (2006.01)

(52) **U.S. Cl.**
CPC ***A01F 15/0875*** (2013.01); ***A01F 15/042*** (2013.01); ***A01F 15/145*** (2013.01)

(58) **Field of Classification Search**
None
See application file for complete search history.

(56) **References Cited**

U.S. PATENT DOCUMENTS

2009/0107102 A1 4/2009 Biziorek
2013/0019765 A1* 1/2013 Demon A01F 15/0875 100/218
2017/0273248 A1 9/2017 Retzlaff et al.
2018/0228091 A1* 8/2018 Demon A01F 15/08
2022/0312679 A1 10/2022 Kulkarni
2023/0001661 A1* 1/2023 Dreher B30B 9/3096

FOREIGN PATENT DOCUMENTS

EP 0264497 A1 4/1988
EP 2548432 A1 1/2013
EP 4056005 A1 9/2022

OTHER PUBLICATIONS

Extended European Search Report and Written Opinion issued in European Patent Application No. 23193558.6, dated Feb. 15, 2024, in 10 pages.

* cited by examiner

Primary Examiner — Amelia Vorce

(57) **ABSTRACT**

A baler system includes a baler controller includes a processor operable to execute a bale ejection algorithm to receive a command input to initiate a last bale ejection sequence. Upon receiving the command input, the baler controller automatically engages a knotter system to wrap and bind crop material currently disposed within a baling chamber to form a final bale. Upon forming the final bale, the baler controller automatically determines if a discharge location disposed proximate a discharge end of the baling chamber is clear of obstructions. Upon determining that the discharge end of the baling chamber is clear of obstructions, the baler controller automatically engages a bale ejection system to eject the final bale from the baling chamber and onto the discharge location.

13 Claims, 6 Drawing Sheets

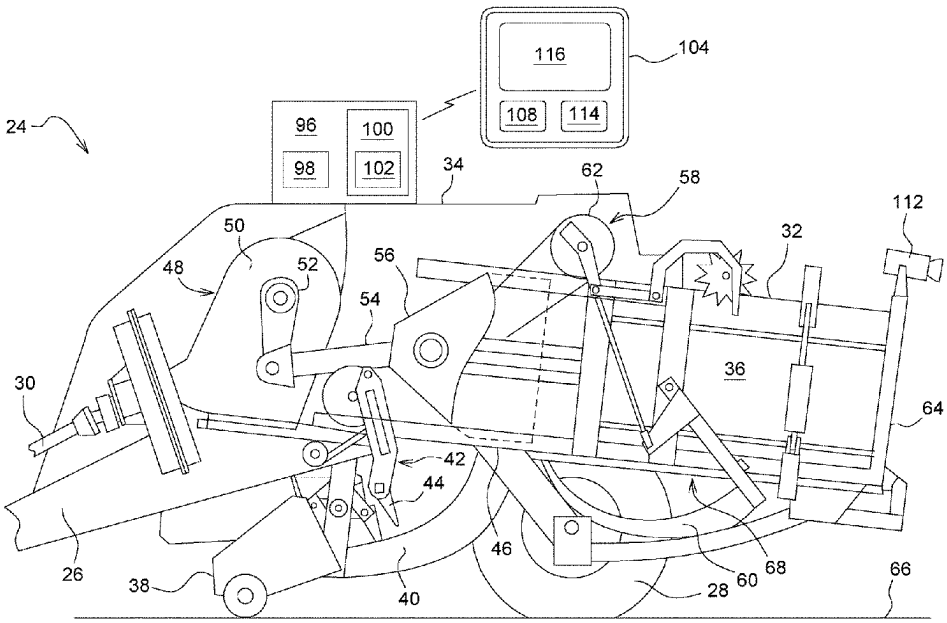

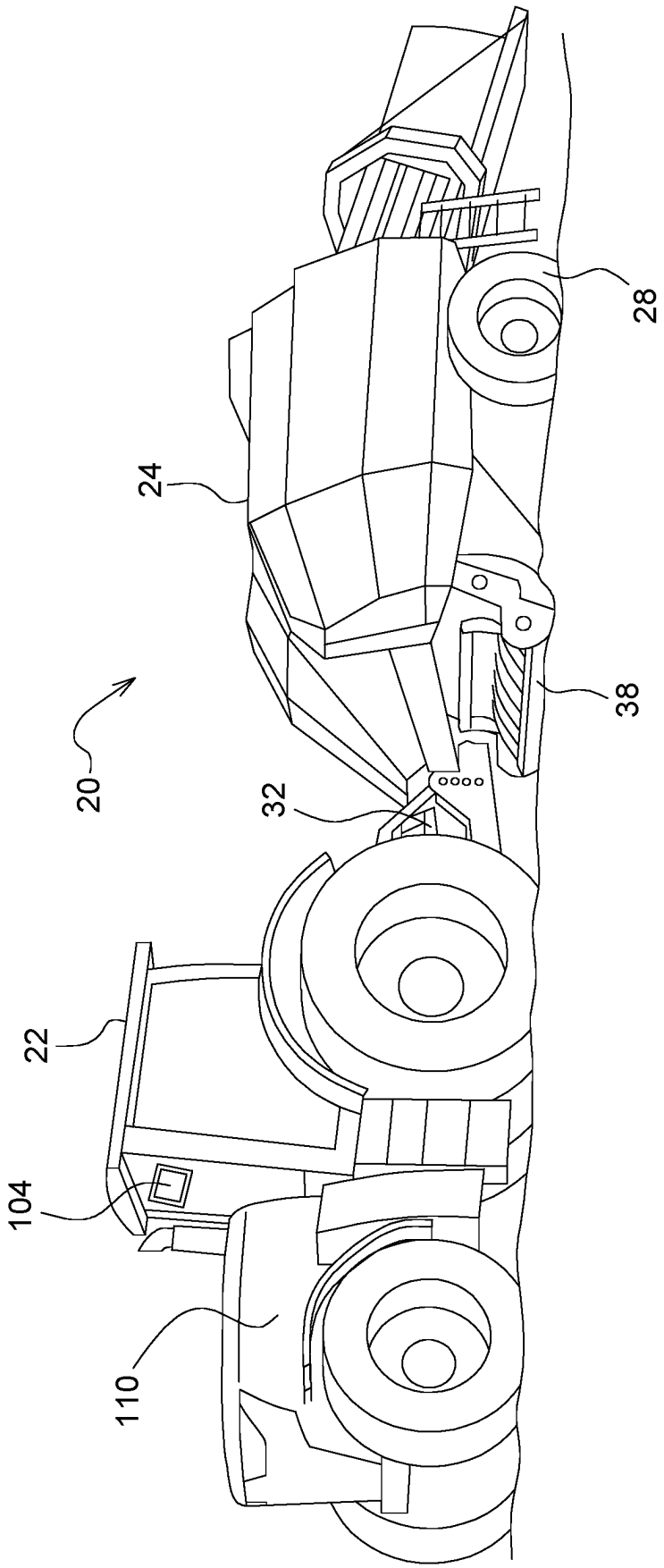

FIG. 1

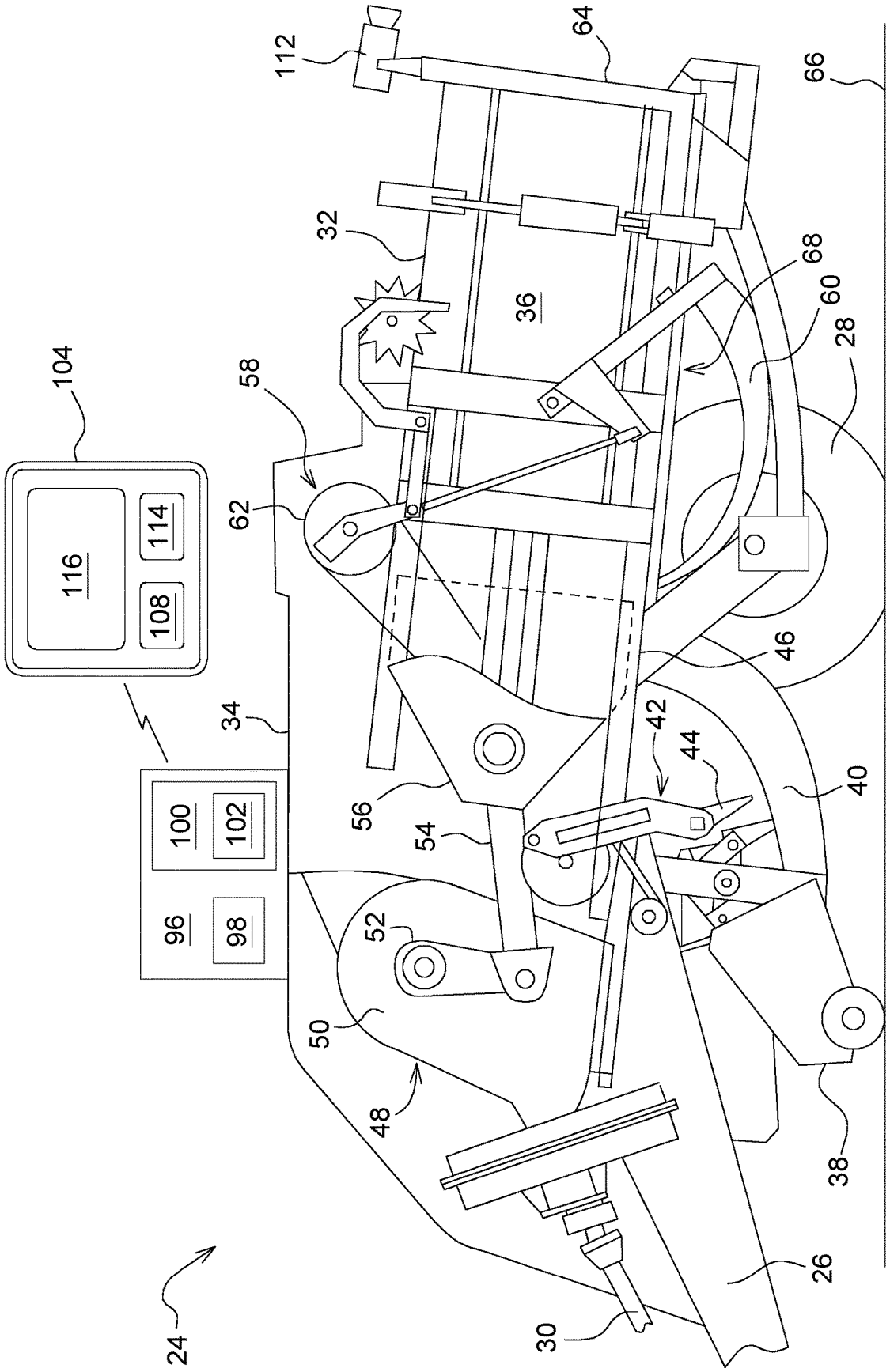
112
64
66
32
36
68
60
28
104
58
62
116
114
108
46
34
42
44
40
56
54
100
102
96
98
52
50
48
38
26
30
24

FIG. 2

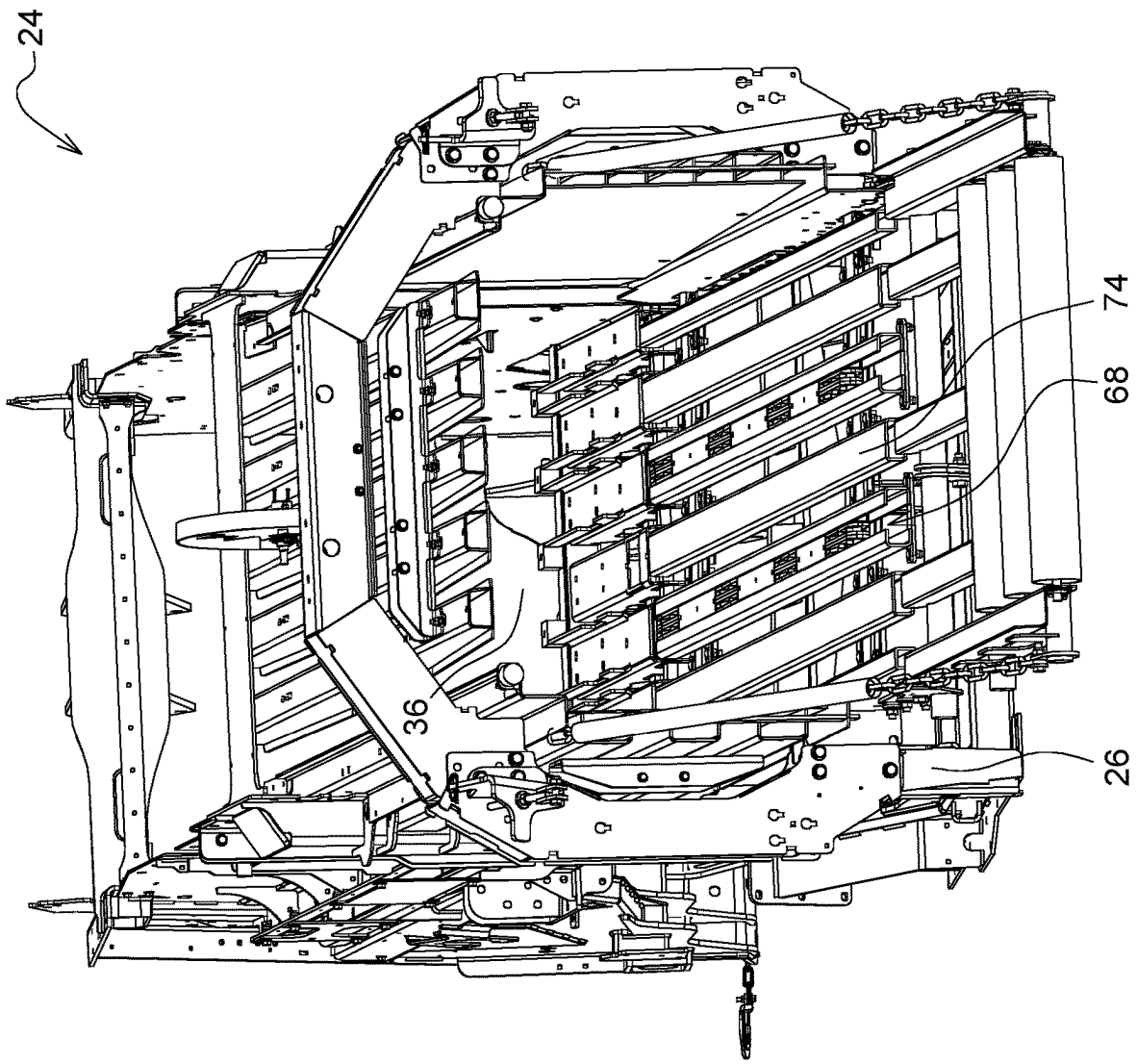

FIG. 3

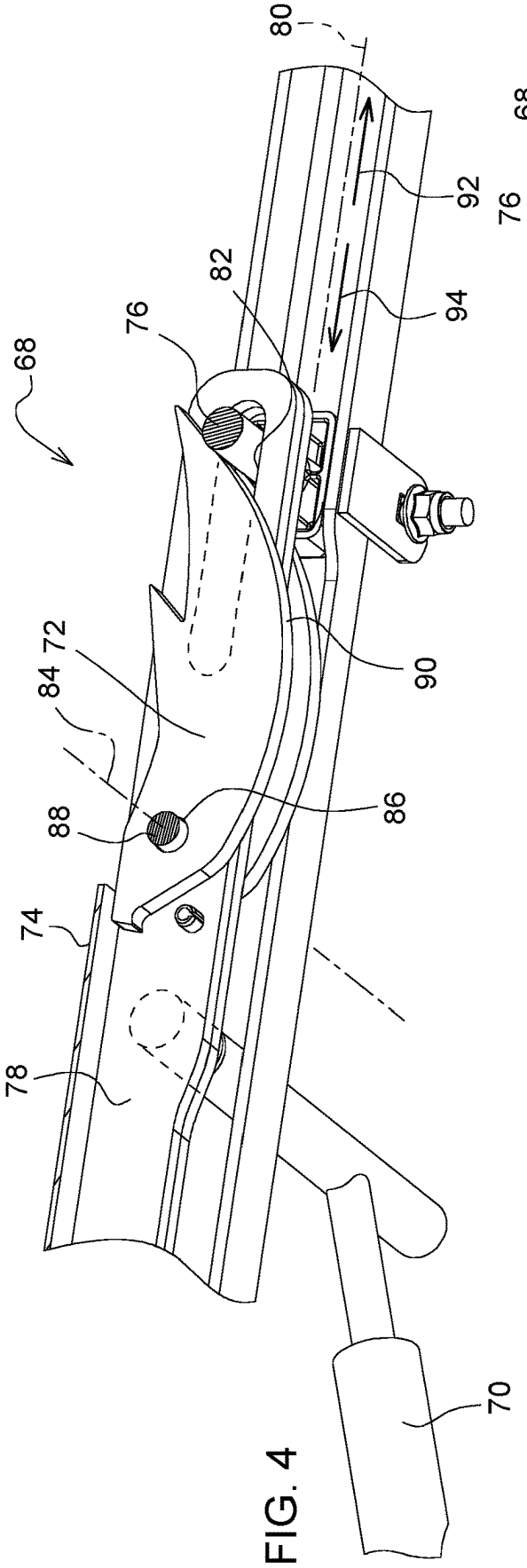
68
76
82
80
92
94
90
72
84
88
86
74
78
70

FIG. 4

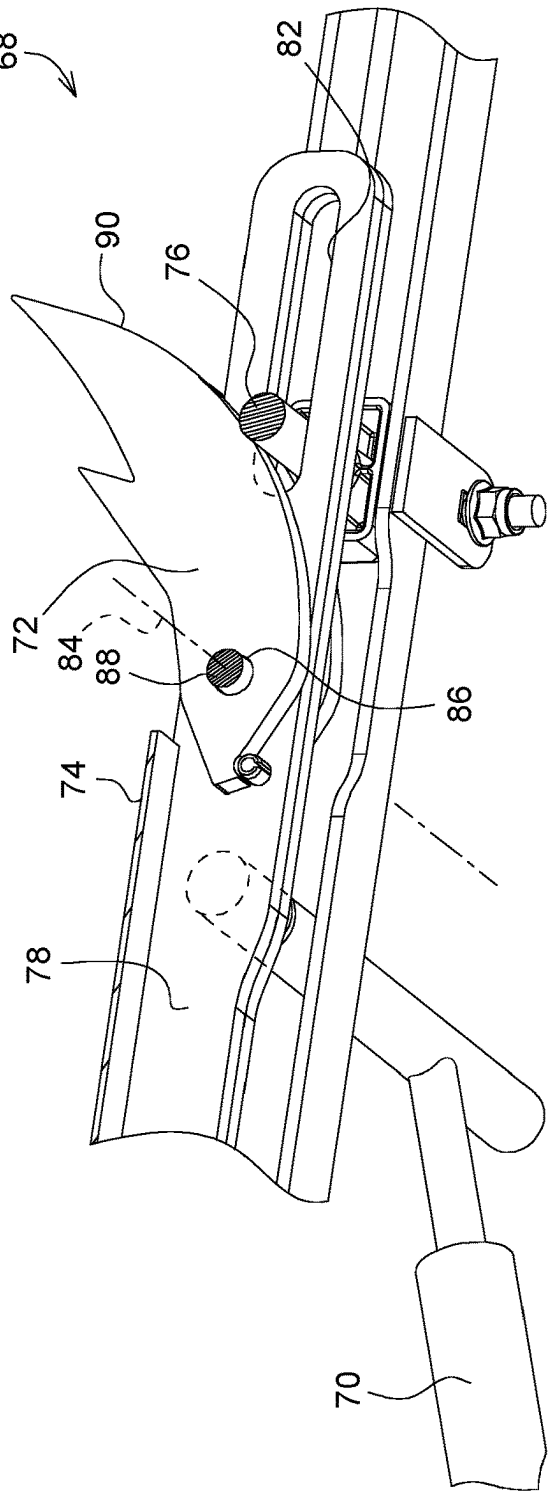
68
82
76
90
72
84
88
86
74
78
70

FIG. 5

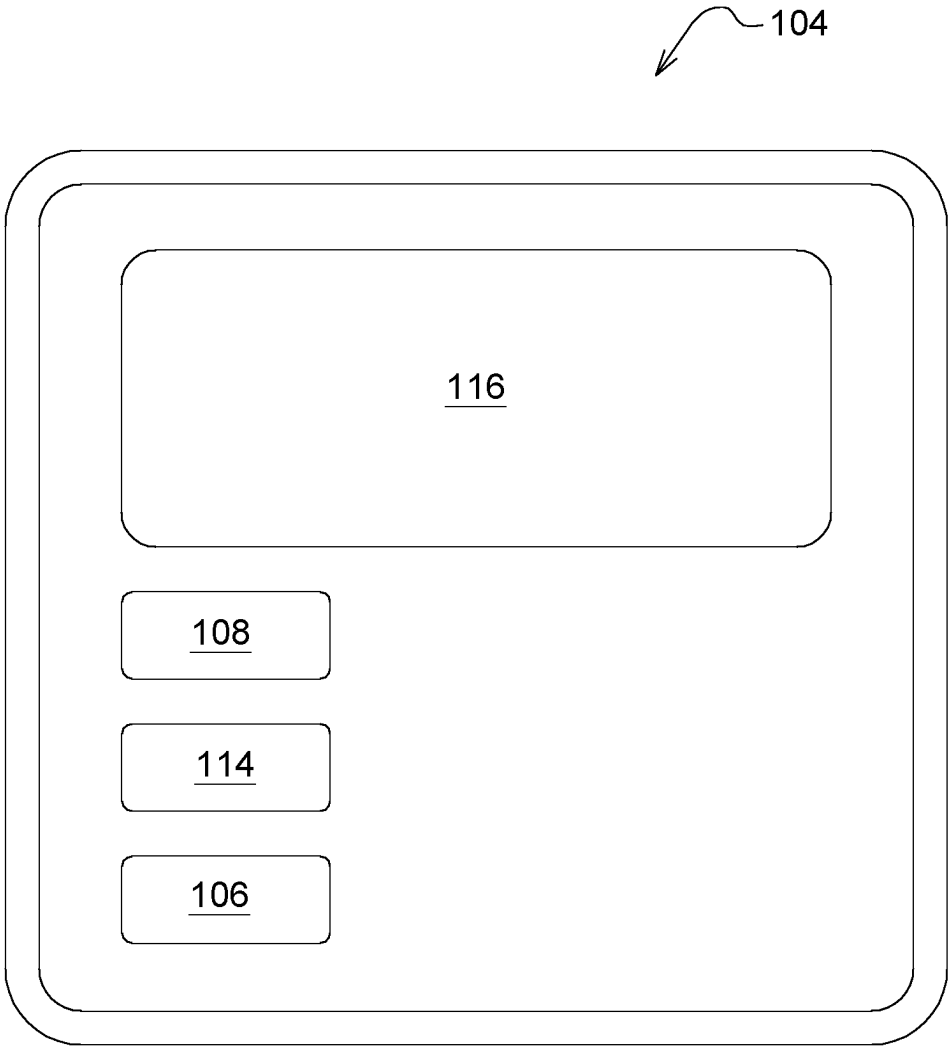

FIG. 6

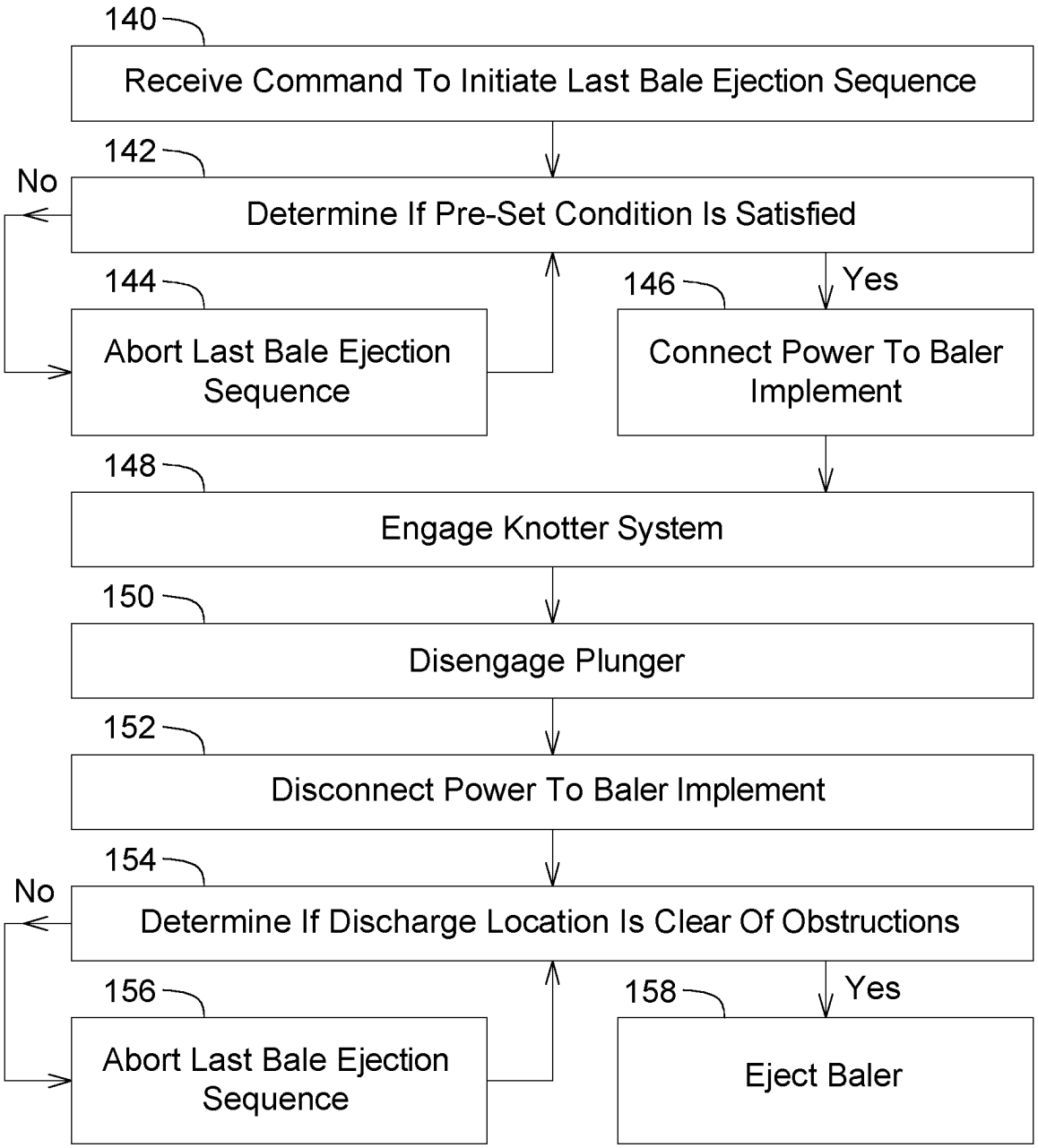
140
Receive Command To Initiate Last Bale Ejection Sequence
142
No
Determine If Pre-Set Condition Is Satisfied
144
Abort Last Bale Ejection Sequence
146
Yes
Connect Power To Baler Implement
148
Engage Knotter System
150
Disengage Plunger
152
Disconnect Power To Baler Implement
154
No
Determine If Discharge Location Is Clear Of Obstructions
156
Abort Last Bale Ejection Sequence
158
Yes
Eject Baler

FIG. 7

AUTOMATED LAST BALE EJECTION SEQUENCE FOR BALER IMPLEMENT

TECHNICAL FIELD

The disclosure generally relates to a baler system for forming a bale having a parallelepiped shape.

BACKGROUND

Agricultural balers gather, compress, and shape crop material into a bale. One exemplary baler implement is often referred to as a large square baler. Large square balers utilize a compression system including a gearbox with a crank arm and connecting rod which are attached to a reciprocating plunger. During each rotation of the crank arm, the reciprocating plunger compresses the crop in a baling or compression chamber into a flake as the plunger moves towards the rear of the baler. Multiple flakes are formed in sequence and then bound together with a plurality of twine strands by a knotter system while still in the baling chamber. The process repeats, whereby a subsequent bale pushes the proceeding bale out of the baling chamber through a rear exit of the baling chamber, whereby the proceeding bale is deposited, for example, on a ground surface or on a trailer.

At the end of a baling session, the crop material remaining in the baling chamber must be ejected through a separate process because there are no subsequent bales to push the remaining crop material out of the baling chamber. In order to eject the remaining crop material from the baling chamber at the end of a baling session, a last bale ejection sequence may be followed. The last bale ejection sequence is a manually executed operation performed by a user, and often takes considerable time to complete.

SUMMARY

A baler system is described herein. The baler system includes a baler implement including a baling chamber and a plunger moveable within the baling chamber in a reciprocating motion. The plunger is operable to compress crop material within the baling chamber into a formed bale having a parallelepiped shape. A knotter system includes a needle operable to wrap a twine strand around a periphery of the formed bale within the baling chamber, and a knotter operable to tie the twine strand to bind the crop material into the parallelepiped shape. The baler implement further includes a bale ejection system having an actuator and a bale engagement member. The actuator is selectively controllable to move the bale engagement member into contact with the formed and bound bale within the baling chamber, and thereafter move the bale engagement member to eject the formed and bound bale from the baling chamber through a discharge end of the baling chamber. A baler controller includes a processor and a memory having a bale ejection algorithm stored thereon. The processor is operable to execute the bale ejection algorithm to receive a command input to initiate a last bale ejection sequence. Upon receiving the command input, the baler controller automatically engages the knotter system to wrap and bind crop material currently disposed within the baling chamber to form a final bale. Upon forming the final bale, the baler controller automatically determines if a discharge location disposed proximate the discharge end of the baling chamber is clear of obstructions or is not clear of obstructions. Upon determining that the discharge end of the baling chamber is clear of obstructions, the baler controller automatically engages the bale ejection system to eject the final bale from the baling chamber and onto the discharge location.

In one aspect of the disclosure, the processor is operable to execute the bale ejection algorithm to display a last bale eject initiation window on a touch screen display. A user may enter the command input by touching the last bale eject initiation window to initiate the last bale ejection sequence. In one implementation, the touch screen display may be incorporated into an associated work vehicle, e.g., a tractor, coupled to the baler implement.

In one aspect of the disclosure, upon receiving the command input and prior to engaging the knotter system, the processor may be operable to execute the bale ejection algorithm to automatically determine if a pre-set condition is satisfied or if the pre-set condition is not satisfied. The pre-set condition may include, but is not limited to, one or more safety features associated with the baler implement and/or an associated tow vehicle, e.g., a tractor. The one or more safety features may include, but are not limited to, a defined transmission position of the associated tow vehicle, an engine operation status of the associated tow vehicle, a flywheel brake of a transmission of the baler implement, a defined position of a bale chute adjacent the discharge end of the baling chamber, a defined position of one or more access panels of the baler implement, an orientation of the baler implement relative to gravity, a location within a work field, etc.

In one aspect of the disclosure, the processor may be operable to execute the bale ejection algorithm to automatically abort the last bale ejection sequence when the pre-set condition is not satisfied. When the pre-set condition is not satisfied and the last bale ejection sequence is aborted, the processor may be operable to automatically display an abort notice on a display. The abort notice may indicate that the last bale ejection sequence has been aborted because the pre-set condition is not satisfied. The abort notice may include a proceed window via which the user may enter a command to continue the last bale ejection sequence once the pre-set condition has been satisfied and/or remedied.

In one aspect of the disclosure, upon receiving the command input, the processor may be operable to execute the bale ejection algorithm to automatically connect torque communication between a power supply and the baler implement to power the plunger and the knotter system. For example, the baler controller may automatically engage a Power Take-Off of an associated tow vehicle, e.g., a tractor, through which rotational power and torque are supplied to the baler implement to power the plunger and the knotter system.

In one aspect of the disclosure, the processor may be operable to execute the bale ejection algorithm to automatically disengage the plunger from the final bale after the knotter system has bound the final bale with the twine strand. After disengaging the plunger from the final bale, the processor may be operable to execute the bale ejection algorithm to automatically disconnect torque communication between the power supply and the baler implement. For example, once the final bale has been bound by the knotter system and the plunger withdrawn from the final bale to relieve pressure against the final bale, the baler controller may disengage a Power Take-Off of an associated tow vehicle, e.g., a tractor, through which the supply of rotational power and torque to the baler implement are discontinued.

In one aspect of the disclosure, the processor may be operable to execute the bale ejection algorithm to automatically engage the bale ejection system by repeatedly controlling the actuator of the bale ejection system between an

extended position and a retracted position. The actuator may be repeatedly moved between the extended position and the retracted position until the final bale is fully ejected from the baler implement and deposited at the discharge location. In one implementation of the disclosure, the actuator may include, but is not limited to, a linear actuator, e.g., a hydraulic cylinder or an electric linear actuator, that cycles between the extended position and the retracted position. Each respective cycle of the actuator, i.e., retraction and extension, may move the bale a defined distance. The final bale may be fully ejected from the baling chamber by repeating this cycle.

In one aspect of the disclosure, upon determining that the discharge location is not clear of obstructions, the processor may be operable to execute the bale ejection algorithm to automatically abort the last bale ejection sequence. The baler controller may automatically display an abort notice on a display indicating that the last bale ejection sequence has been aborted because the discharge location is not clear of obstructions. In one implementation, the processor may be operable to execute the bale ejection algorithm to automatically cancel the abort notice when the obstruction is no longer detected in the discharge location. In another implementation, the abort notice may include a proceed window via which the user may enter a command to continue the last bale ejection sequence once the obstruction has been removed and/or the baler implement has been relocated away from the obstruction.

In one aspect of the disclosure, the processor may be operable to execute the bale ejection algorithm to display a status window on a user interface or a display indicating a current status of the bale ejection sequence. The status window may automatically update as the baler controller automatically moves the various steps of the last bale ejection sequence, such that the user may know the current status of the final bale and the baler implement.

Accordingly, the baler system described herein provides a convenient process for the user to more quickly and easily eject the final bale of the baling session. The system described herein automates the last bale ejection process and incorporates automated safety checks into the last bale ejection sequence.

The above features and advantages and other features and advantages of the present teachings are readily apparent from the following detailed description of the best modes for carrying out the teachings when taken in connection with the accompanying drawings.

BRIEF DESCRIPTION OF THE DRAWINGS

FIG. **1** is a schematic perspective view of a baler system.

FIG. **2** is a schematic side view of a baler implement.

FIG. **3** is a schematic perspective view of a bale ejection system.

FIG. **4** is a schematic perspective view of the bale ejection system showing a bale engaging member in a retracted position.

FIG. **5** is a schematic perspective view of the bale ejection system showing the bale engaging member in an engaged position.

FIG. **6** is a schematic plan view of a display of the baler system.

FIG. **7** is a flowchart representing a last bale ejection sequence.

DETAILED DESCRIPTION

Those having ordinary skill in the art will recognize that terms such as "above," "below," "upward," "downward," "top," "bottom," etc., are used descriptively for the figures, and do not represent limitations on the scope of the disclosure, as defined by the appended claims. Furthermore, the teachings may be described herein in terms of functional and/or logical block components and/or various processing steps. It should be realized that such block components may be comprised of any number of hardware, software, and/or firmware components configured to perform the specified functions.

Terms of degree, such as "generally", "substantially" or "approximately" are understood by those of ordinary skill to refer to reasonable ranges outside of a given value or orientation, for example, general tolerances or positional relationships associated with manufacturing, assembly, and use of the described embodiments.

As used herein, "e.g." is utilized to non-exhaustively list examples, and carries the same meaning as alternative illustrative phrases such as "including," "including, but not limited to," and "including without limitation." As used herein, unless otherwise limited or modified, lists with elements that are separated by conjunctive terms (e.g., "and") and that are also preceded by the phrase "one or more of," "at least one of," "at least," or a like phrase, indicate configurations or arrangements that potentially include individual elements of the list, or any combination thereof. For example, "at least one of A, B, and C" and "one or more of A, B, and C" each indicate the possibility of only A, only B, only C, or any combination of two or more of A, B, and C (A and B; A and C; B and C; or A, B, and C). As used herein, the singular forms "a", "an" and "the" are intended to include the plural forms as well, unless the context clearly indicates otherwise. Further, "comprises," "includes," and like phrases are intended to specify the presence of stated features, steps, operations, elements, and/or components, but do not preclude the presence or addition of one or more other features, steps, operations, elements, components, and/or groups thereof.

Referring to the Figures, wherein like numerals indicate like parts throughout the several views, a baler system is generally shown at **20** in FIG. **1**. Referring to FIG. **1** the baler system **20** is shown configured as a traction unit **22** pulling a baler implement **24**. However, it should be appreciated that the teachings of this disclosure may be applied to other baler platforms, and are not limited to the example implementation of the baler system **20** shown in the Figures and described herein.

As shown in FIG. **1**, the traction unit **22** may include, but is not limited to, a tractor. The traction unit **22** is coupled to the baler implement **24** for pulling and powering the baler implement **24**. However, it should be appreciated that in other embodiments, the baler implement **24** may be self-propelled, in which case the traction unit **22** and the baler implement **24** are configured as a single, self-propelled vehicle.

As depicted in FIG. **1**, the baler implement **24** is configured as a large square baler. The baler implement **24** may move across a field and gather and process crop material to form a bale. The baler implement **24** may then eject the formed bale from a rear of the baler implement **24**.

Referring to FIG. **2**, the exemplary implementation of the baler implement **24** includes a frame **26**, ground engaging devices **28**, such as but not limited to wheels, and an input shaft **30**, such as a power-take-off (PTO) shaft, which can receive rotational power and/or torque from a power supply **110**, such as through a PTO output **32** (shown in FIG. **1**) of the traction unit **22**.

The baler implement **24** includes a housing **34** or body, which generally shields various internal components of the baler implement **24**. The housing **34** is attached to and supported by the frame **26**. The housing **34** includes multiple wall sections or panels that form and/or define a baling chamber **36**. The baling chamber **36** may alternatively be referred to as a compression chamber for forming the bale.

The baler implement **24** includes a pick-up mechanism **38**. The pick-up mechanism **38** is disposed proximate a forward end of the frame **26**. The pick-up mechanism **38** gathers crop material from the ground surface and directs the gathered crop material toward and into a pre-compression passageway **40**, which stores a volume of gathered crop material. A feeder system **42** includes a plurality of forks **44**, which are timed to move the crop material from the pre-compression passageway **40** into the baling chamber **36** through an inlet **46** of the baling chamber **36**. The pickup may include, but is not limited to tines, forks **44**, augers, conveyors, baffles, etc., for gathering and moving the crop material. The baler implement **24** may be equipped with a pre-cutter, disposed between the pickup and the pre-compression passageway **40**. As such, the pre-cutter is disposed downstream of the pickup and upstream of the inlet **46** relative to a direction of travel of the crop material. The pre-cutter cuts or chops the crop material into smaller pieces.

The input shaft **30** or PTO shaft is connected to an input of a transmission **48** to provide rotational power to the baler implement **24** from the traction unit **22** or other associated vehicle or power source. The transmission **48** includes a gearbox **50** which converts the rotational motion of the input shaft **30** along a generally longitudinal axis **80** of the baler implement **24** to an output of the transmission **48** having a rotational motion along a generally transverse axis of the baler implement **24**.

The baler implement **24** includes a crank arm **52** connected to the output of the transmission **48**. A connecting link **54** interconnects the crank arm **52** and a plunger **56**. The crank arm **52** rotates based upon the output of the transmission **48** and the plunger **56** moves in a reciprocal motion within the baling chamber **36** as the crank arm **52** rotates. The plunger **56** extends into the baling chamber **36**, thereby compressing the crop material, and then at least partially retracts from the baling chamber **36**, at which time the feeder moves more crop material from the pre-compression passageway **40** into the baling chamber **36**.

When the bale is formed within the baling chamber **36**, a knotter system **58** wraps a plurality of twine strands around the bale to secure the shape of the bale. The knotter system **58** includes a plurality of needles **60**, one needle **60** per twine strand, that are operable to wrap the twine strands around a periphery of the formed bale within the baling chamber **36**. The twine strands are wrapped around a longitudinal extend or longest length of the bale, with each individual twine strand encircling the bale. The knotter system **58** further includes a plurality of knotters **62**, one knotter **62** per twine strand, that are operable to tie each end of the respective twine strands together to form a knot, securing each respective twine strand in place to bind the crop material into the parallelepiped shape of the bale.

In the example implementation shown in the figures and described herein, a completed bale is pushed off a rearward discharge end **64** of the baler implement **24** by a subsequently formed bale, whereby the bale is deposited at a discharge location **66**, e.g., the ground surface or onto a trailer. Since the last bale formed during a baling session does not have any subsequent bales to push it out of the baling chamber **36**, a bale ejection system **68** may be used to discharge the last bale of the baling session off the rearward end of the baler implement **24**.

Referring to FIGS. **3-5**, the bale ejection system **68** includes an actuator **70** and a bale engagement member **72**. The actuator **70** is selectively controllable to move the bale engagement member **72** into contact with the formed and bound bale within the baling chamber **36**. Once the bale engagement member **72** is engaged with the bale, the actuator **70** moves the bale engagement member **72** and thereby the bale toward a discharge end **64** of the baler implement **24** to eject the formed and bound bale from the baling chamber **36** through the discharge end **64** of the baling chamber **36**.

Referring to FIG. **3**, an example implementation of the bale ejection system **68** is shown incorporated into a bottom wall **74** of the baling chamber **36**. However, it should be appreciated that in other implementations, the bale ejection system **68** may be incorporated into additional or other wall panels of the baling chamber **36**, and may be configured differently than the example implementation shown in the Figures and described herein.

Referring to FIGS. **4** and **5**, a pin **76** is secured to the frame **26**. The pin **76** extends generally transverse or perpendicular to a longitudinal axis **80** of the frame **26**. The pin **76** may be attached to the frame **26** directly or indirectly, and remains stationary relative to the frame **26**. A carrier **78** is coupled to the frame **26**. The carrier **78** is moveable relative to the frame **26** along the longitudinal axis **80** of the frame **26**. The carrier **78** may be moveably coupled to the frame **26** in a suitable manner the enables longitudinal movement relative to the frame **26**. For example, the carrier **78** may be slidably mounted to the frame **26**. The carrier **78** defines an elongated slot **82** that extends along the longitudinal axis **80** of the frame **26**. The pin **76** extends through the elongated slot **82**. The carrier **78** is moveable relative to the pin **76**, such that the pin **76** may move within the elongated slot **82**.

The actuator **70** may interconnect the frame **26** and the carrier **78**. The actuator **70** may be controllable to extend and retract to move the carrier **78** relative to the frame **26** along the longitudinal axis **80** of the frame **26**. The actuator **70** may include, but is not limited to, a hydraulic linear actuator **70**, a pneumatic linear actuator **70**, an electric linear actuator **70**, etc. Additionally, the actuator **70** may include a linear or non-linear actuator **70** that is coupled to one or more gears and/or levers to effectuate linear movement of the carrier **78** along the longitudinal axis **80**, such as but not limited to an electric motor, a hydraulic motor, etc.

The bale engagement member **72** is attached to and moveable with the carrier **78** along the longitudinal axis **80** and relative to the frame **26**. The bale engagement member **72** is rotatably attached to the carrier **78** for rotation bout a rotation axis **84**. The rotation axis **84** is generally perpendicular to the longitudinal axis **80**. The bale engagement member **72** includes a mounting bore **86** that extends therethrough. The mounting bore **86** is parallel with the rotation axis **84**. A fastener **88**, such as but not limited to a bolt, shaft, rivet, etc., may extend through they mounting bore **86** and secure the bale engagement member **72** to the carrier **78**. A center of the mounting bore **86** defines the rotation axis **84**.

The bale engagement member **72** includes a cam surface **90** disposed in contacting or abutting engagement with the pin **76**. Movement of the carrier **78** and the bale engagement member **72** along the longitudinal axis **80** moves the cam surface **90** against the pin **76**. Movement along the longitudinal axis **80** of the cam surface **90** on the pin **76** causes the bale engagement member **72** to rotate about the rotation

axis **84** between a retracted position, show in FIG. **4**, and an engaged position, shown in FIG. **5**. When disposed in the retracted position, the bale engagement member **72** is positioned on an exterior side of the baling chamber **36**. When disposed in the engaged position, the bale engagement member **72** extends into the baling chamber **36**.

Initial movement of the carrier **78** and the bale engagement member **72** in a rearward direction **92** moves the bale engagement member **72** from the retracted position, shown in FIG. **4**, into the engaged position, shown in FIG. **5**. It should be appreciated that the rearward direction **92** is a direction moving toward the rearward or discharge end **64** of the frame **26**. When the bale engagement member **72** is positioned in the engaged position, the bale engagement member **72** extends into the baling chamber **36** for engaging crop material of the formed bale and moving the bale with the bale engagement member **72** and the carrier **78**. Once the bale engagement member **72** is disposed in the engaged position, continued movement of the carrier **78** rearward along the longitudinal axis **80**, maintains engagement between the bale engagement member **72** and the bale and moves the bale rearward relative to the baling chamber **36** to eject the bale.

Initial movement of the carrier **78** and the bale engagement member **72** in a forward direction **94** along the longitudinal axis **80**, causes the bale engagement member **72** to rotate and move from the engaged position, shown in FIG. **5**, into the retracted position, shown in FIG. **4**. It should be appreciated that the forward direction **94** is a direction moving toward the forward end of the frame **26**. When the bale engagement member **72** is disposed in the retracted position, the bale engagement member **72** is positioned outside the baling chamber **36** and does not engage the bale. Once the bale engagement member **72** is disposed in the retracted position, continued movement of the carrier **78** forward along the longitudinal axis **80**, maintains dis-engagement between the bale engagement member **72** and the bale and moves the carrier **78** and the bale engagement member **72** relative to the baling chamber **36** to reset the carrier **78** and the bale engagement member **72** for a subsequent ejection stroke. The above described process may be repeated several times until the bale is ejected from the baling chamber **36**.

It should be appreciated that the bale ejection system **68** may differ from the example implementation described above. For example, in other implementations, the bale ejection system **68** may include rotary actuator **70** that drives an endless chain or belt. The bale engagement member **72** may be attached to and rotate with the endless chain. As the endless chain moves through its cycle, the bale engagement member **72** may be rotating into the baling chamber **36** and into engagement with the bale, whereby the bale is moved rearward with the bale engagement member **72**. The bale engagement member **72** may then be rotated out of the baling chamber **36** and returned to the beginning of the cycle to operating in an endless loop.

The baler system **20** further includes a baler controller **96**. The baler controller **96** is disposed in communication with the baler implement **24** to operate the plunger **56**, the knotter system **58**, and the bale ejection system **68**. While the baler controller **96** is generally described herein as a singular device, it should be appreciated that the baler controller **96** may include multiple devices linked together to share and/or communicate information therebetween. Furthermore, it should be appreciated that the baler controller **96** may be located on the baler implement **24** or located remotely from the baler implement **24**, such as on the associated traction unit **22**.

The baler controller **96** may alternatively be referred to as a computing device, a computer, a controller, a control unit, a control module, a module, etc. The baler controller **96** includes a processor **98**, a memory **100**, and all software, hardware, algorithms, connections, sensors, etc., necessary to manage and control the operation of the baler implement **24**. As such, a method may be embodied as a program or algorithm operable on the baler controller **96**. It should be appreciated that the baler controller **96** may include any device capable of analyzing data from various sensors, comparing data, making decisions, and executing the required tasks.

As used herein, "baler controller **96**" is intended to be used consistent with how the term is used by a person of skill in the art, and refers to a computing component with processing, memory, and communication capabilities, which is utilized to execute instructions (i.e., stored on the memory **100** or received via the communication capabilities) to control or communicate with one or more other components. In certain embodiments, the baler controller **96** may be configured to receive input signals in various formats (e.g., hydraulic signals, voltage signals, current signals, CAN messages, optical signals, radio signals), and to output command or communication signals in various formats (e.g., hydraulic signals, voltage signals, current signals, CAN messages, optical signals, radio signals).

The baler controller **96** may be in communication with other components on the traction unit **22** and/or the baler implement **24**, such as hydraulic components, electrical components, and operator inputs within an operator station of the associated traction unit **22**. The baler controller **96** may be electrically connected to these other components by a wiring harness such that messages, commands, and electrical power may be transmitted between the baler controller **96** and the other components. Although the baler controller **96** is referenced in the singular, in alternative embodiments the configuration and functionality described herein can be split across multiple devices using techniques known to a person of ordinary skill in the art.

The baler controller **96** may be embodied as one or multiple digital computers or host machines each having one or more processors, read only memory (ROM), random access memory (RAM), electrically-programmable read only memory (EPROM), optical drives, magnetic drives, etc., a high-speed clock, analog-to-digital (A/D) circuitry, digital-to-analog (D/A) circuitry, and any required input/output (I/O) circuitry, I/O devices, and communication interfaces, as well as signal conditioning and buffer electronics.

The computer-readable memory **100** may include any non-transitory/tangible medium which participates in providing data or computer-readable instructions. The memory **100** may be non-volatile or volatile. Non-volatile media may include, for example, optical or magnetic disks and other persistent memory. Example volatile media may include dynamic random access memory (DRAM), which may constitute a main memory. Other examples of embodiments for memory include a floppy, flexible disk, or hard disk, magnetic tape or other magnetic medium, a CD-ROM, DVD, and/or any other optical medium, as well as other possible memory devices such as flash memory.

The baler controller **96** includes the tangible, non-transitory memory **100** on which are recorded computer-executable instructions, including a bale ejection algorithm **102**. The processor **98** of the baler controller **96** is configured for

executing the bale ejection algorithm **102**. The bale ejection algorithm **102** implements a method of ejecting a last bale from the baler implement **24**.

Referring to FIG. **7**, the baler controller **96** is configured to receive a command input to initiate a last bale ejection sequence. The step of receiving the command input is generally indicated by box **140** shown in FIG. **7**. For example, the baler controller **96** may display a last bale eject initiation window **106** on a touch screen display **104** of the associated traction unit **22**. A user may enter the command input by touching the last bale eject initiation window **106** on the touch screen display **104** to initiate the last bale ejection sequence. It should be appreciated that the baler controller **96** may receive the command input via some other input device and in some other manner not described herein.

Upon receiving the command input the baler controller **96** initiates the last bale ejection sequence. The last bale ejection sequence includes the baler controller **96** automatically determining if a pre-set condition is satisfied or if the pre-set condition is not satisfied. The step of determining if the pre-set condition is satisfied is generally indicated by box **142** shown in FIG. **7**. The pre-set condition may include, but is not limited to, one or more safety features associated with the baler implement **24** and/or an associated tow vehicle, e.g., a tractor. The one or more safety features may include, but are not limited to, a defined transmission **48** position of the associated tow vehicle, an engine operation status of the associated tow vehicle, a flywheel brake of the transmission **48** of the baler implement **24**, a defined position of a bale chute adjacent the discharge end **64** of the baling chamber **36**, a defined position of one or more access panels of the baler implement **24**, an orientation of the baler implement **24** relative to gravity, a location within a work field, etc.

When the baler controller **96** determines that the pre-set condition is not satisfied the baler controller **96** may then automatically abort the last bale ejection sequence. The step of aborting the last bale ejection sequence when the pre-set condition is not satisfied is generally indicated by box **144** shown in FIG. **7**. In doing so, referring to FIG. **6**, the baler controller **96** may automatically display an abort notice **108** on the display **104** indicating that the last bale ejection sequence has been aborted because the pre-set condition is not satisfied in a status window **116**. In one implementation, the baler controller **96** may be configured to automatically cancel the abort notice **108** when the pre-set condition becomes satisfied. For example, upon receiving the abort notice **108** regarding the pre-set condition, the user may remedy the condition, whereupon the baler controller **96** automatically detects and determines that the pre-set condition is now satisfied and cancels the abort notice **108**. In another implementation, referring to FIG. **6**, the user may remedy the pre-set condition, and thereafter enter an override command **114** into the baler controller **96** via the touch screen display **104** to cancel the abort notice **108** regarding the pre-set condition.

Upon receiving the command input and determining that all pre-set conditions are satisfied, the baler controller **96** may then automatically connect torque communication between a power supply **110** and the baler implement **24** to power the plunger **56** and the knotter system **58**. The step of connecting torque communication to the baler implement is generally indicated by box **146** shown in FIG. **7**. Connecting torque communication may include, but is not limited to, engaging a PTO output **32** of the associated traction unit **22** to rotate the input shaft **30** of the baler implement **24**, thereby providing power to the baler implement **24** to power the plunger **56** and the knotter system **58**.

With power supplied to the baler implement **24**, and with the plunger **56** positioned to compress the crop material within the baling chamber **36**, the baler controller **96** may then automatically engage the knotter system **58** to wrap and bind crop material currently disposed within the baling chamber **36** to form a final bale. The step of engaging the knotter system **58** is generally indicated by box **148** shown in FIG. **7**. The knotter system **58** operates as generally described above, in which the needles **60** pass the twine strands around the bale and the knotters **62** tie the respective twine strands together to form a knot binding the final bale.

Once the knotter system **58** has completed tying the twine strands and binding the final bale, the baler controller **96** may then automatically disengage the plunger **56** from the final bale. The step of disengaging the plunger **56** is generally indicated by box **150** shown in FIG. **7**. The plunger **56** may be actuated and moved away from the final bale, thereby releasing pressure on the plunger **56** and the bale. After disengaging the plunger **56** from the final bale, the baler controller **96** may then automatically disconnect torque communication between the power supply **110** and the baler implement **24**. The step of disconnecting power to the baler implement **24** is generally indicated by box **152** shown in FIG. **7**. Torque communication between the baler implement **24** and the power supply **110** may be disconnected, for example, by disengaging the PTO output **32** of the associated traction unit **22**.

Once the final bale is formed and bound with the twine strands, the baler controller **96** may then automatically determine if the discharge location **66** disposed proximate the discharge end **64** of the baling chamber **36** is clear of obstructions or is not clear of obstructions. The step of determining if the discharge location **66** is clear of obstructions is generally indicated by box **154** shown in FIG. **7**. The discharge location **66** may be considered the area onto which the final bale will be deposited or ejected. For example, the discharge location **66** may be a trailer or the ground surface immediately behind the baler implement **24**. The obstruction may include any object that may interfere with ejection of the final bale. For example, the obstruction may include a person, an animal, another vehicle, a pole, a post, a rock, a ditch, another bale, etc. The baler controller **96** may receive data from a object detector **112**, e.g., a proximity sensor, positioned to detect obstructions and/or objects in and around the discharge location **66**. For example, the object detector **112** may include an image sensor positioned to capture an image of the discharge location **66**, whereby the baler controller **96** may analyze the image to detect and identify objects and/or obstructions in the discharge area. In other embodiments, the object detector **112** may include, but is not limited to, a lidar sensor or a radar sensor.

If the baler controller **96** determines that the discharge location **66** is not clear of obstructions, then the baler controller **96** may automatically abort the last bale ejection sequence. The step of aborting the last bale ejection sequence because the discharge location **66** is not clear of obstructions is generally indicated by box **156** shown in FIG. **7**. In doing so, referring to FIG. **6**, the baler controller **96** may automatically display an abort notice **108** on the display **104** indicating in the status window **116** that the last bale ejection sequence has been aborted because an obstruction is present in the discharge location **66**, i.e., the discharge location **66** is not clear of obstructions. In one implementation, the baler controller **96** may be configured to automatically cancel the abort notice **108** when the obstruction is removed from the discharge location **66**. For example, upon receiving the abort notice **108** regarding the obstruc-

tion in the discharge location **66**, the user may remove the obstruction or relocate the baler implement **24**, whereupon the baler controller **96** automatically detects and determines that no obstructions are present in the discharge location **66** and cancels the abort notice **108**. In another implementation, referring to FIG. **6**, the user may remove the obstruction from the discharge location **66** and/or relocate the baler implement **24**, and thereafter enter an override command **114** into the baler controller **96** via the touch screen display **104** to cancel the abort notice **108** regarding the obstruction in the discharge location **66**.

Once the baler controller **96** has determined that the discharge location **66** is clear of any obstructions, then the baler controller **96** may automatically engage the bale ejection system **68** to eject the final bale from the baling chamber **36** and onto the discharge location **66**. The step of ejecting the final bale is generally indicated by box **158** shown in FIG. **7**. As described above, in the example implementation of the bale ejection system **68**, the baler controller **96** may repeatedly control the actuator **70** of the bale ejection system **68** between the extended position to engage the bale with the bale engaging member and move the final bale toward the discharge end **64** of the baling chamber **36**, and the retracted position to re-set the bale engaging member for the next cycle. The cycle is repeated until the final bale is ejected from the baler implement **24** and deposited at the discharge location **66**.

The baler controller **96** may be configured to display the status window **116** on a user interface, such as but not limited to the display **104**. The status window **116** may be configured to indicate a current status of the bale ejection sequence. For example, the status window **116** may be updated at the beginning and/or completion of each step described above. Additionally, the status window **116** may be configured to present the reason for the abort notice **108**, i.e., the abort notice **108** related to the pre-set condition and/or the abort notice **108** related to obstructions in the discharge area, if required. The system and process described above enable the user to quickly and easily eject the last bale of the baling session with the touch of a button to initiate the automated process.

The detailed description and the drawings or figures are supportive and descriptive of the disclosure, but the scope of the disclosure is defined solely by the claims. While some of the best modes and other embodiments for carrying out the claimed teachings have been described in detail, various alternative designs and embodiments exist for practicing the disclosure defined in the appended claims.

What is claimed is:

1. A baler system comprising:

a baler implement including a baling chamber and a plunger moveable within the baling chamber in a reciprocating motion to compress crop material into a formed bale having a parallelepiped shape;

a knotter system having a needle operable to wrap a twine strand around a periphery of the formed bale within the baling chamber and a knotter operable to tie the twine strand to bind the crop material into the parallelepiped shape;

a bale ejection system having an actuator and a bale engagement member, wherein the actuator is selectively controllable to move the bale engagement member into contact with the formed and bound bale within the baling chamber and thereafter move the bale engagement member to eject the formed and bound bale from the baling chamber through a discharge end of the baling chamber;

a baler controller including a processor and a memory having a bale ejection algorithm stored thereon, wherein the processor is operable to execute the bale ejection algorithm to:

receive a command input to initiate a last bale ejection sequence;

upon receiving the command input, automatically engage the knotter system to wrap and bind crop material currently disposed within the baling chamber to form a final bale;

upon forming the final bale, automatically determine if a discharge location disposed proximate the discharge end of the baling chamber is clear of obstructions or is not clear of obstructions;

upon determining that the discharge end of the baling chamber is clear of obstructions, automatically engage the bale ejection system to eject the final bale from the baling chamber and onto the discharge location.

2. The baler system set forth in claim **1**, wherein the processor is operable to execute the bale ejection algorithm to display a last bale eject initiation window on a touch screen display, whereby the user may enter the command input by touching the last bale eject initiation window to initiate the last bale ejection sequence.

3. The baler system set forth in claim **1**, wherein upon receiving the command input and prior to engaging the knotter system, the processor is operable to execute the bale ejection algorithm to automatically determine if a pre-set condition is satisfied or if the pre-set condition is not satisfied.

4. The baler system set forth in claim **3**, wherein the processor is operable to execute the bale ejection algorithm to automatically abort the last bale ejection sequence when the pre-set condition is not satisfied.

5. The baler system set forth in claim **4**, wherein the processor is operable to execute the bale ejection algorithm to automatically display an abort notice on a display indicating that the last bale ejection sequence has been aborted because the pre-set condition is not satisfied.

6. The baler system set forth in claim **1**, wherein upon receiving the command input, the processor is operable to execute the bale ejection algorithm to automatically connect torque communication between a power supply and the baler implement to power the plunger and the knotter system.

7. The baler system set forth in claim **6**, wherein the processor is operable to execute the bale ejection algorithm to automatically disengage the plunger from the final bale after the knotter system has bound the final bale with the twine strand.

8. The baler system set forth in claim **7**, wherein after disengaging the plunger from the final bale, the processor is operable to execute the bale ejection algorithm to automatically disconnect torque communication between the power supply and the baler implement.

9. The baler system set forth in claim **1**, wherein the processor is operable to execute the bale ejection algorithm to automatically engage the bale ejection system by repeatedly controlling the actuator of the bale ejection system between an extended position and a retracted position until the final bale is ejected from the baler implement and deposited at the discharge location.

10. The baler system set forth in claim **1**, wherein upon determining that the discharge location is not clear of obstructions, the processor is operable to execute the bale ejection algorithm to automatically abort the last bale ejection sequence.

11. The baler system set forth in claim **10**, wherein the processor is operable to execute the bale ejection algorithm to automatically display an abort notice on a display indicating that the last bale ejection sequence has been aborted because the discharge location is not clear of obstructions.

12. The baler system set forth in claim **11**, wherein the processor is operable to execute the bale ejection algorithm to automatically cancel the abort notice when the obstruction is no longer detected in the discharge location.

13. The baler system set forth in claim **1**, wherein the processor is operable to execute the bale ejection algorithm to display a status window on a user interface indicating a current status of the last bale ejection sequence.

* * * * *