US012403692B2

(12) **United States Patent**
Fujimori

(10) **Patent No.: US 12,403,692 B2**
(45) **Date of Patent: Sep. 2, 2025**

(54) **INKJET PRINT HEAD**

(71) Applicant: **ROHM CO., LTD.**

(72) Inventor: **Yoshikazu Fujimori**, Koto (JP)

(73) Assignee: **ROHM CO., LTD.**, Kyoto (JP)

(*) Notice: Subject to any disclaimer, the term of this patent is extended or adjusted under 35 U.S.C. 154(b) by 192 days.

(21) Appl. No.: **18/253,310**

(22) PCT Filed: **Oct. 21, 2021**

(86) PCT No.: **PCT/JP2021/039019**
§ 371 (c)(1),
(2) Date: **May 17, 2023**

(87) PCT Pub. No.: **WO2022/107546**
PCT Pub. Date: **May 27, 2022**

(65) **Prior Publication Data**

US 2024/0009999 A1 Jan. 11, 2024

(30) **Foreign Application Priority Data**

Nov. 20, 2020 (JP) 2020 193728

(51) **Int. Cl.**
B41J 2/14 (2006.01)
H10N 30/00 (2023.01)
(Continued)

(52) **U.S. Cl.**
CPC ***B41J 2/14274*** (2013.01); ***H10N 30/708*** (2024.05); ***H10N 30/875*** (2023.02); ***H10N 30/883*** (2023.02); *H10N 30/2023* (2023.02)

(58) **Field of Classification Search**
CPC B41J 2/14274; B41J 2/14233; B41J 2202/18; B41J 2002/14241;
(Continued)

(56) **References Cited**

U.S. PATENT DOCUMENTS

2010/0141713 A1 6/2010 Hoisington et al.
2016/0043299 A1 2/2016 Fujimori et al.
2019/0255850 A1 8/2019 Kato et al.

FOREIGN PATENT DOCUMENTS

JP 2018069685 A 5/2018

OTHER PUBLICATIONS

International Search Report issued for International Patent Application No. PCT/JP2021/039019, Date of mailing: Jan. 11, 2022, 5 pages including English translation.
(Continued)

Primary Examiner — Kristal Feggins
(74) *Attorney, Agent, or Firm* — HSML P.C.

(57) **ABSTRACT**

An inkjet print head includes an actuator substrate that has an ink flow passage including a pressure chamber, a movable film formation layer that includes a movable film disposed on the pressure chamber and demarcating a top surface portion of the pressure chamber, a piezoelectric element that includes a lower electrode disposed on the movable film, a piezoelectric film formed on the lower electrode, and an upper electrode formed on the piezoelectric film, a hydrogen barrier film that covers at least entire side surfaces of the upper electrode and the piezoelectric film among surfaces of the piezoelectric element, an interlayer insulating film that is formed on the movable film formation layer such as to cover the hydrogen barrier film, and a wiring that is formed on the interlayer insulating film and is connected to the piezoelectric element and a fuse is inserted in an intermediate portion of the wiring.

13 Claims, 82 Drawing Sheets

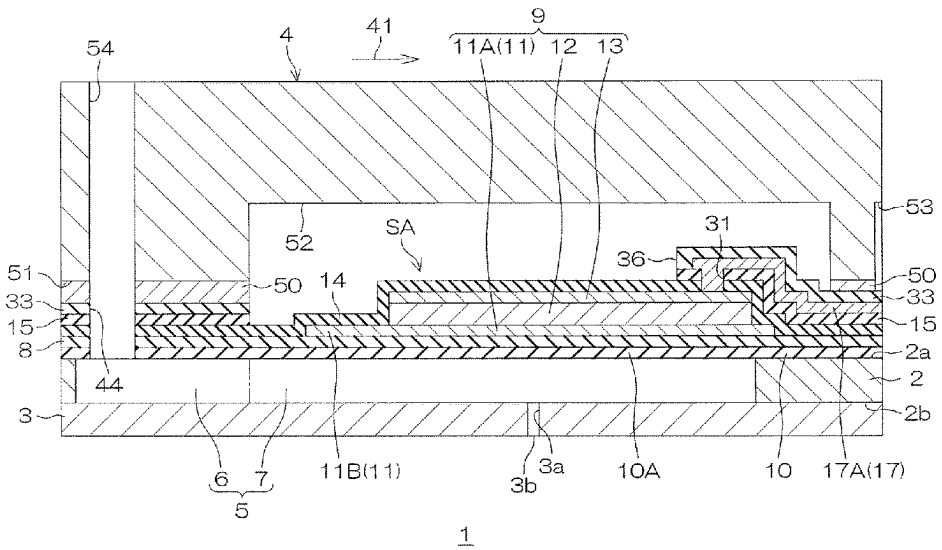

(51) **Int. Cl.**
H10N 30/87 (2023.01)
H10N 30/88 (2023.01)
H10N 30/20 (2023.01)

(58) **Field of Classification Search**
CPC B41J 2002/14491; B41J 2/1623; B41J 2/161; B41J 2/1626; B41J 2/1631; B41J 2/1632; B41J 2/1635; B41J 2/1646; H10N 30/708; H10N 30/875; H10N 30/883; H10N 30/2023
See application file for complete search history.

(56) **References Cited**

OTHER PUBLICATIONS

Written Opinion issued for International Patent Application No. PCT/JP2021/039019, Date of mailing: Jan. 11, 2022, 5 pages including English machine translation.
Office Action issued for German Patent Application No. 11 2021 005 565.8, dated Nov. 7, 2023, 12 pages including informal English translation.

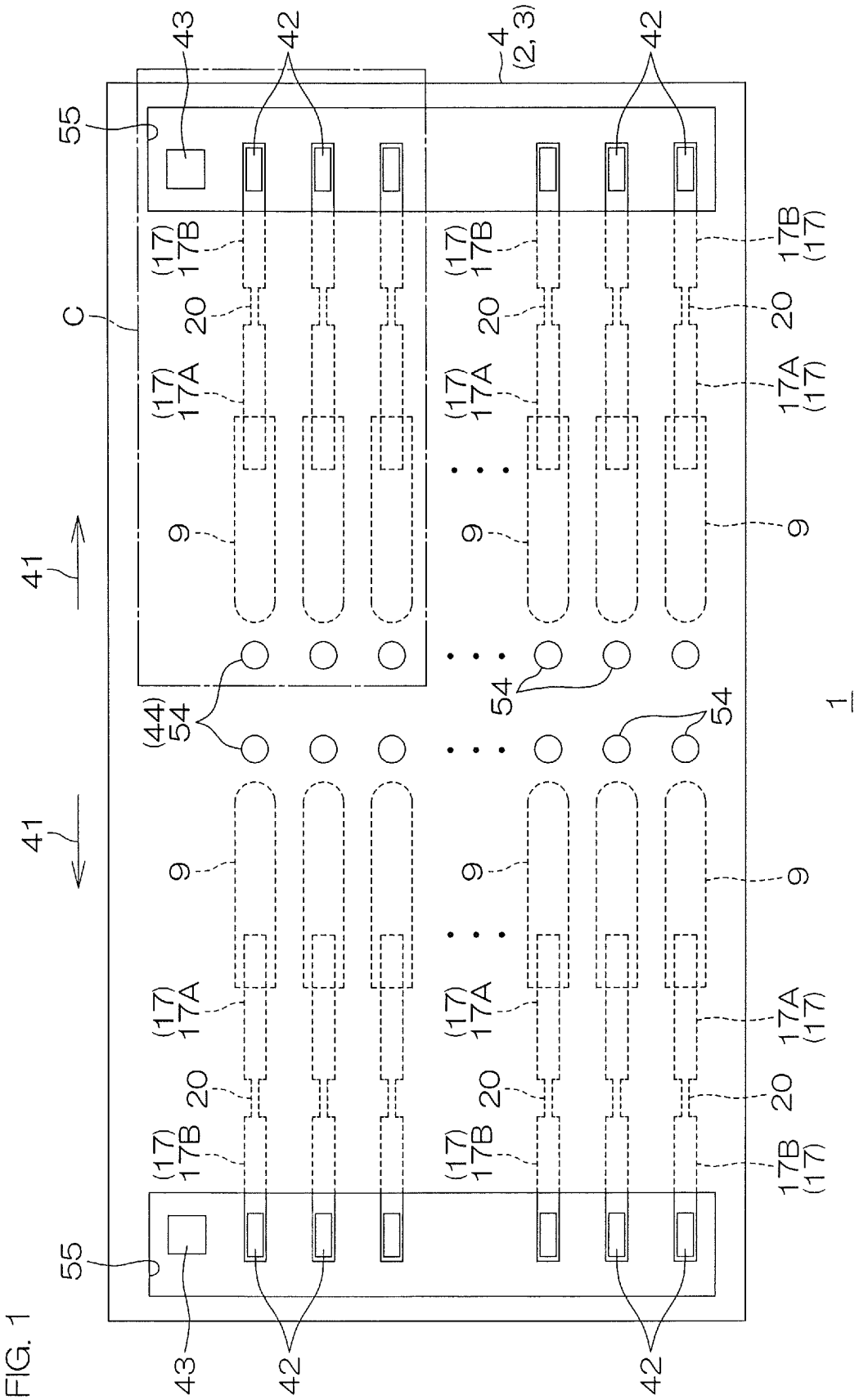
43
42
4
(2, 3)
42
55
C
(17)
17B
20
(17)
17A
9
41
(44)
54
54
54
1
41
9
(17)
17A
20
(17)
17B
55
43
42
42
17B
(17)
20
17A
(17)
9

FIG. 1

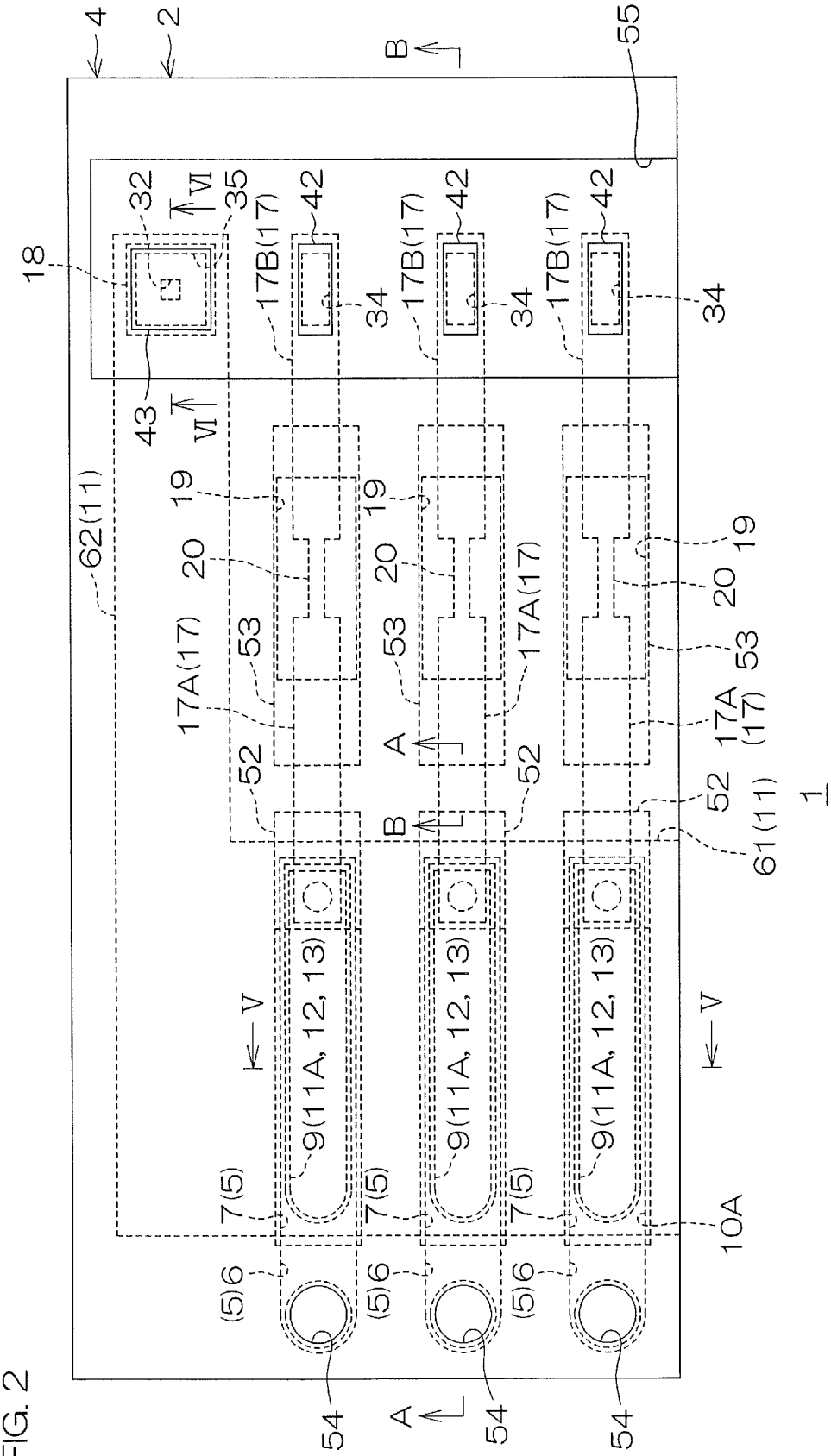
4
2
B
55
18
32
VI
35
42
17B(17)
34
43
62(11)
19
20
53
17A(17)
52
A
61(11)
1
9(11A, 12, 13)
V
7(5)
10A
(5)6
54

FIG. 2

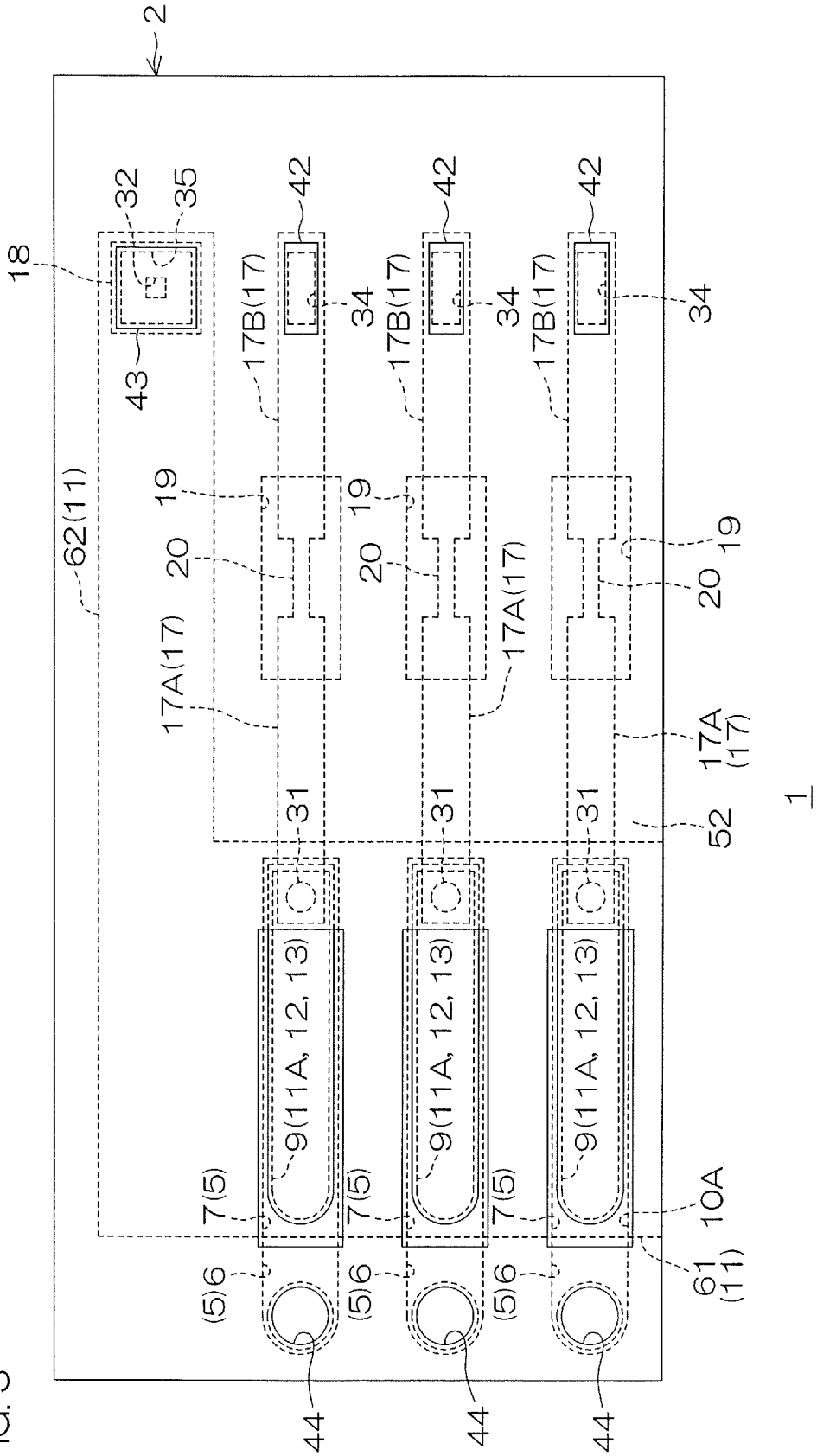
2
18
32
35
43
42
42
42
17B(17)
17B(17)
17B(17)
34
34
34
62(11)
19
19
19
20
20
20
17A(17)
17A(17)
17A(17)
31
31
31
52
9(11A, 12, 13)
9(11A, 12, 13)
9(11A, 12, 13)
7(5)
7(5)
7(5)
10A
61 (11)
(5)6
(5)6
(5)6
44
44
44
1

FIG. 3

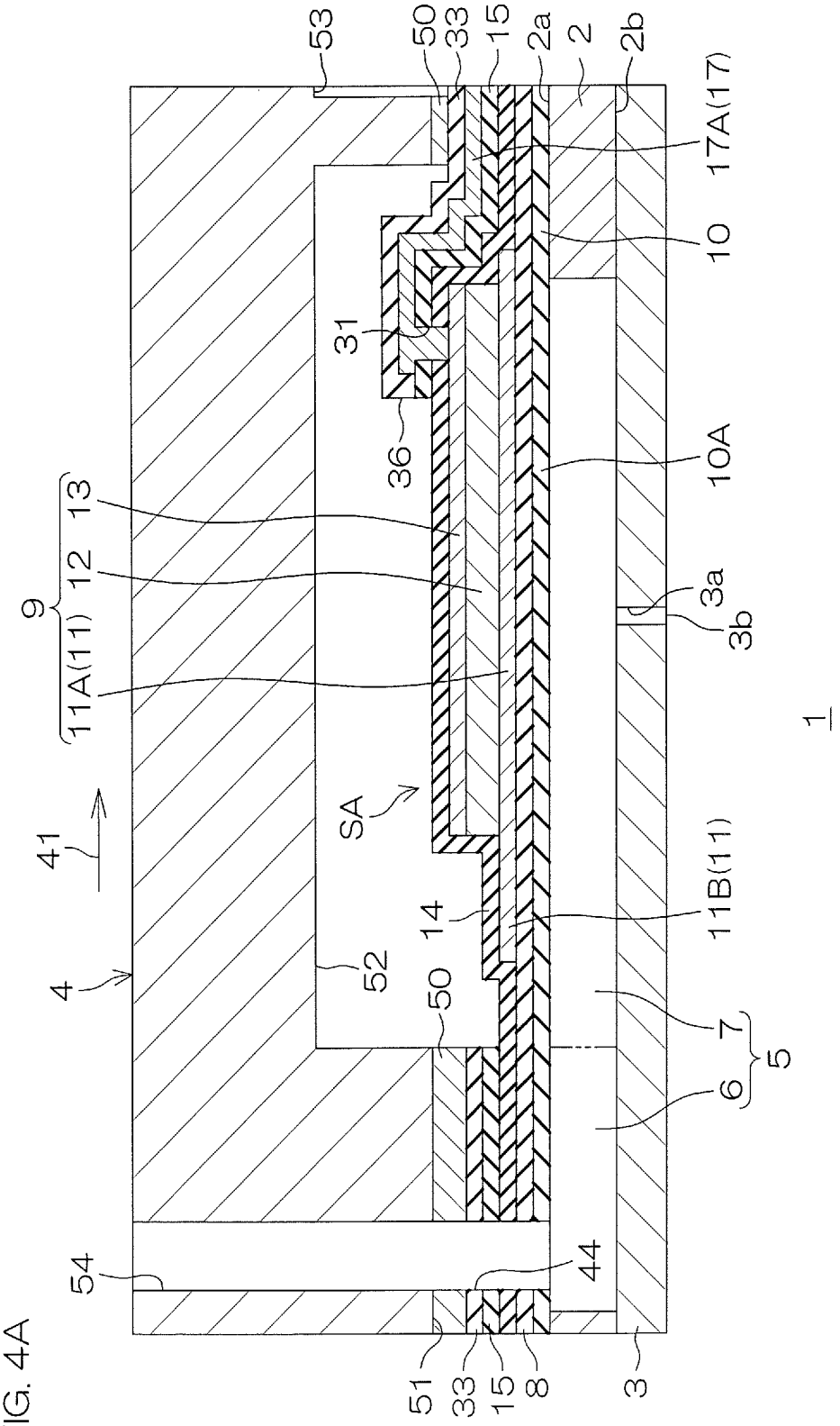
53
50
33
15
2a
2
2b
17A(17)
10
31
36
10A
13
12
9
11A(11)
3a
3b
1
SA
41
11B(11)
14
4
52
50
7
5
6
54
44
51
33
15
8
3

FIG. 4A

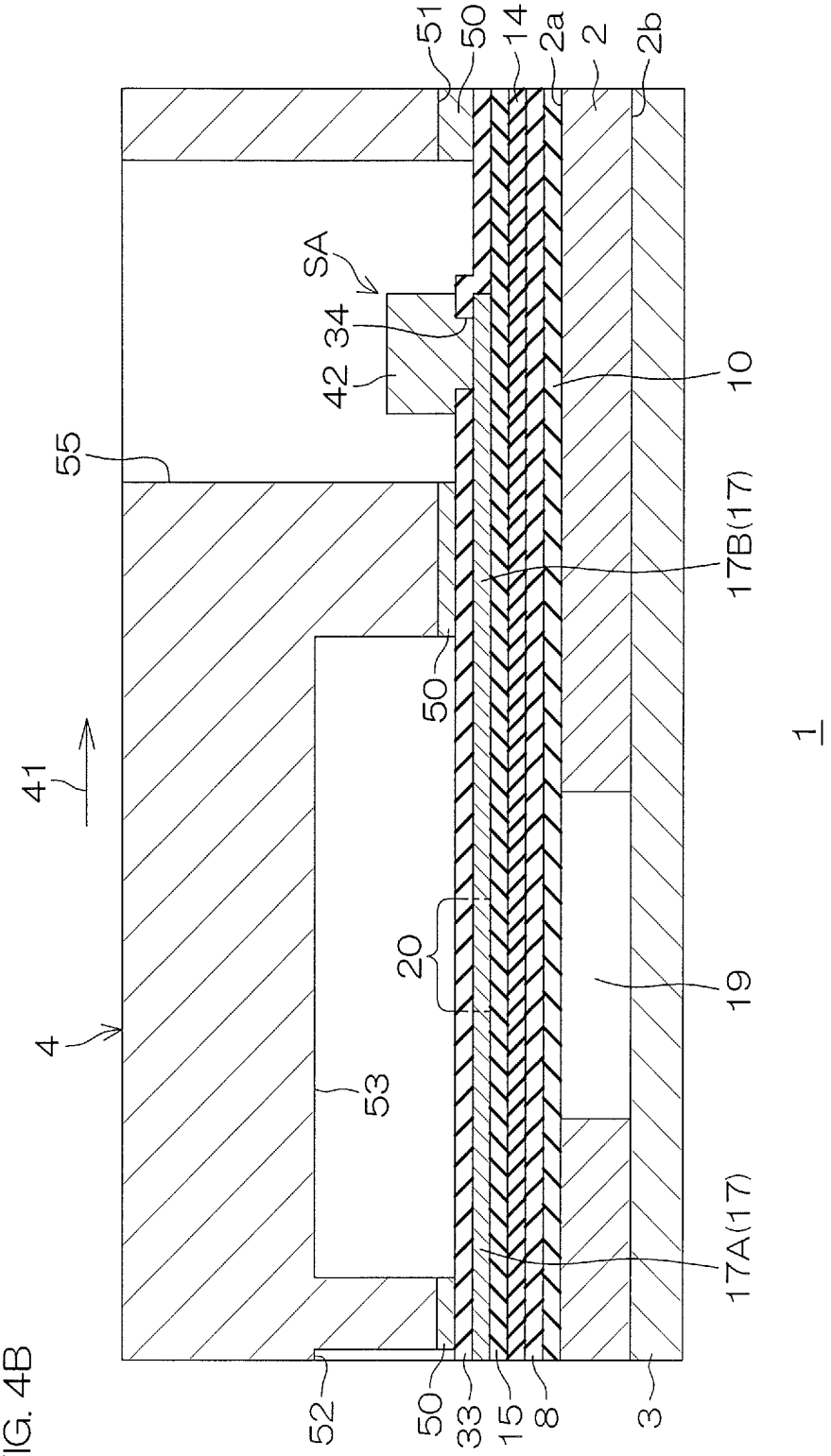
51
50
14
2a
2
2b
SA
34
42
10
55
17B(17)
50
41
20
19
4
53
17A(17)
52
50
33
15
8
3
1

FIG. 4B

FIG. 5

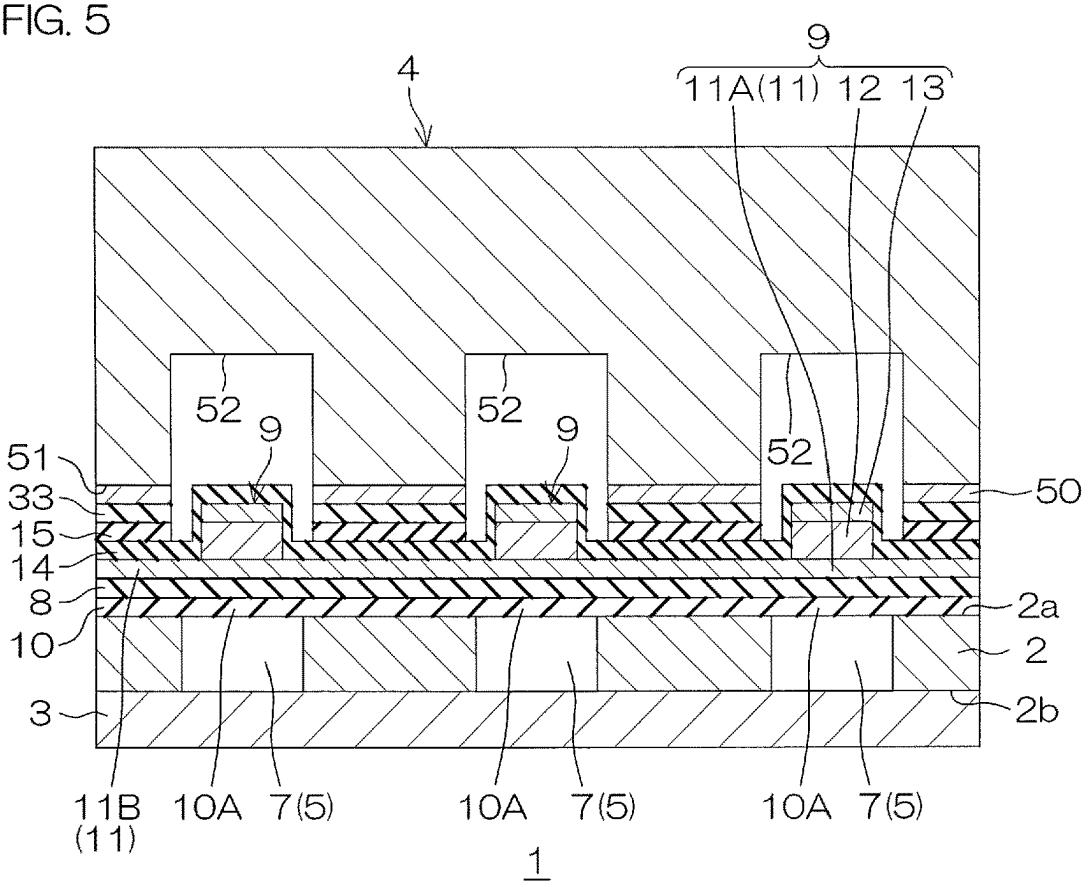
9
4
11A(11) 12 13
52
52
52
9
9
51
33
15
14
8
10
3
50
2a
2
2b
11B
(11)
10A
7(5)
10A
7(5)
10A
7(5)
1

FIG. 6

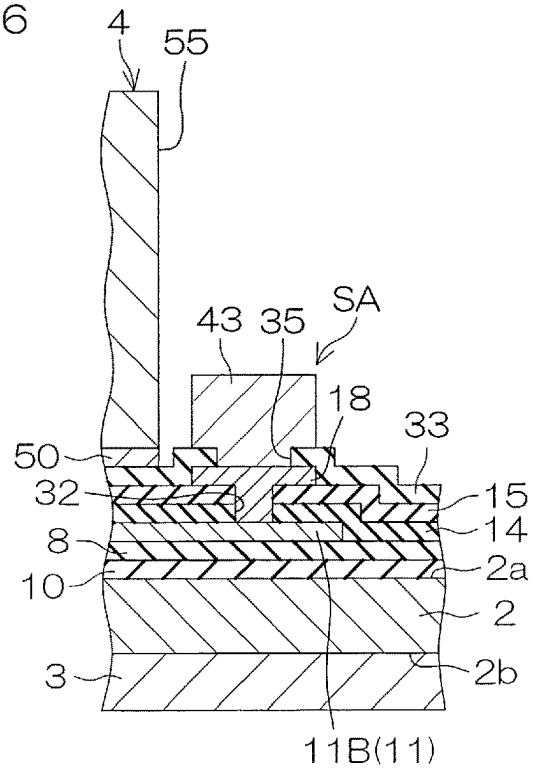
4
55
43
35
SA
18
33
50
32
15
14
8
2a
10
2
3
2b
11B(11)

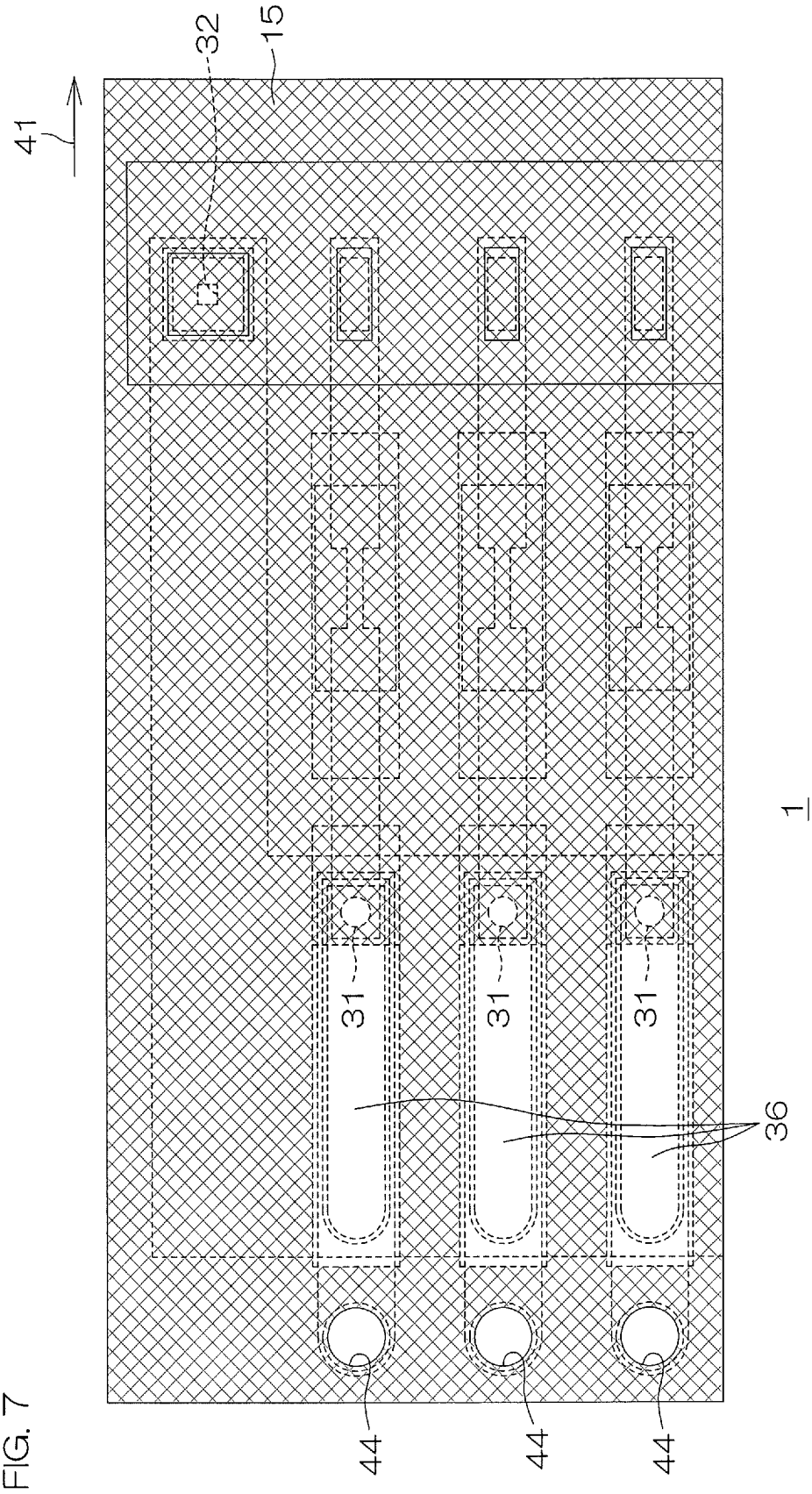

FIG. 7

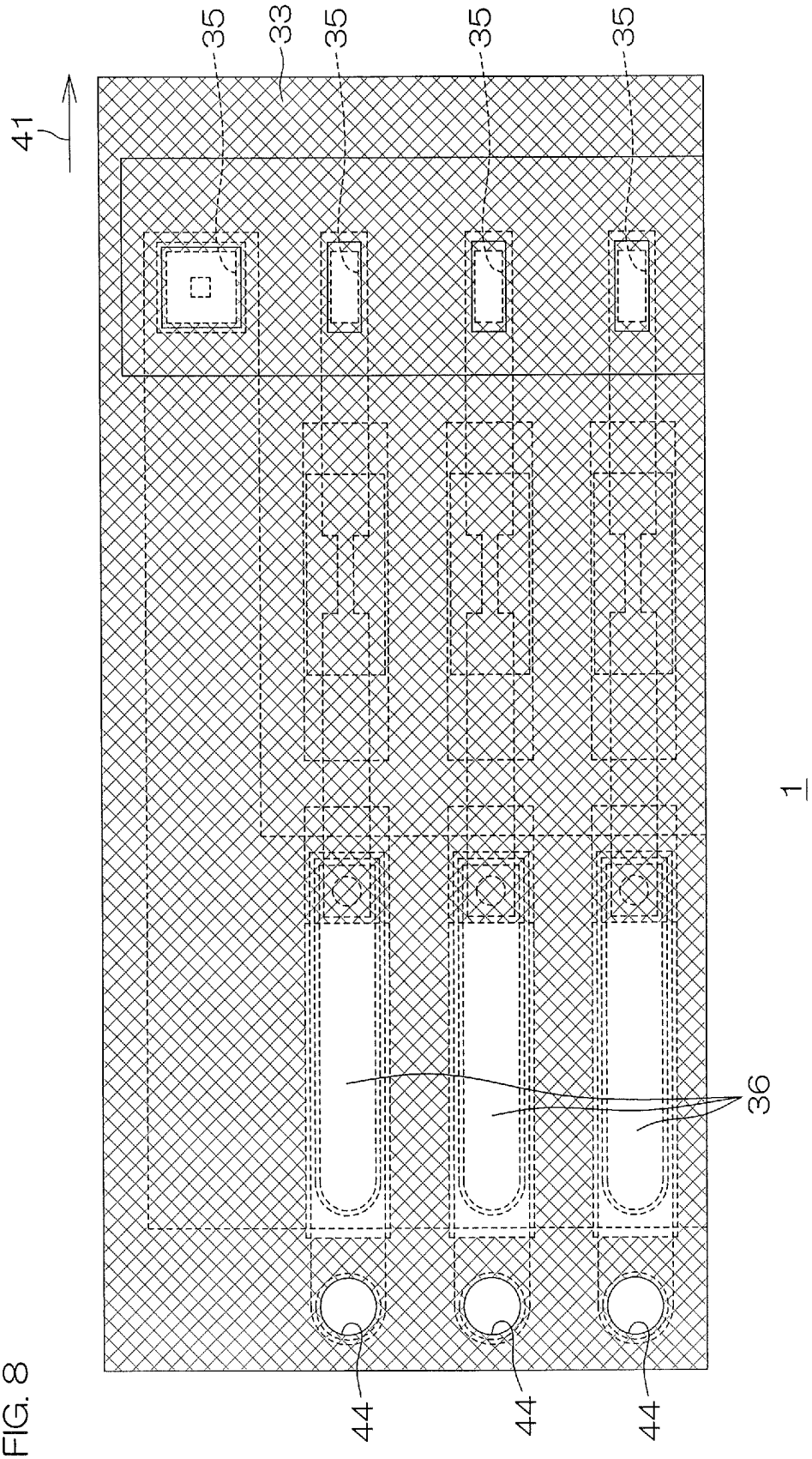

FIG. 8

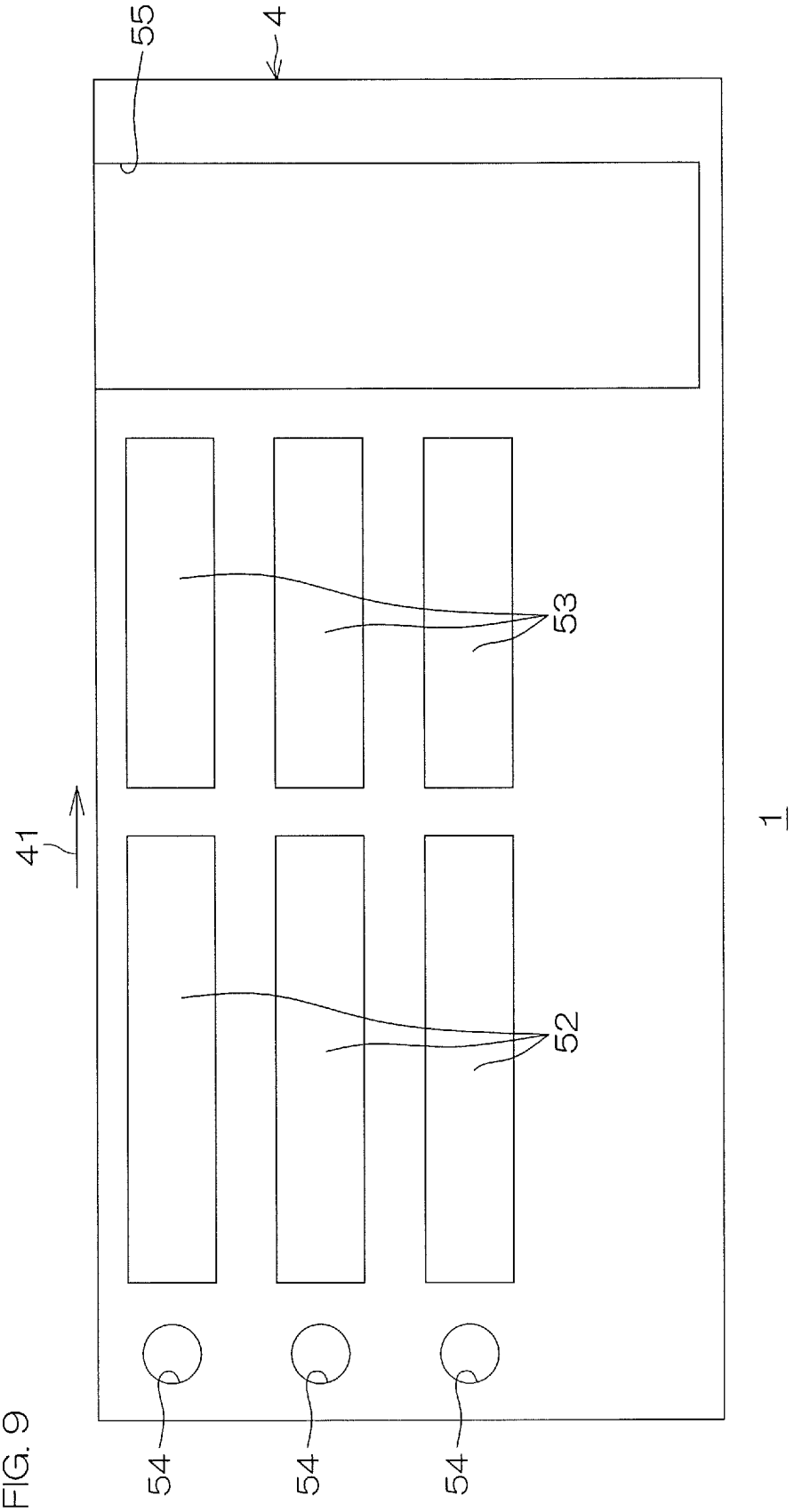

FIG. 9

FIG. 10

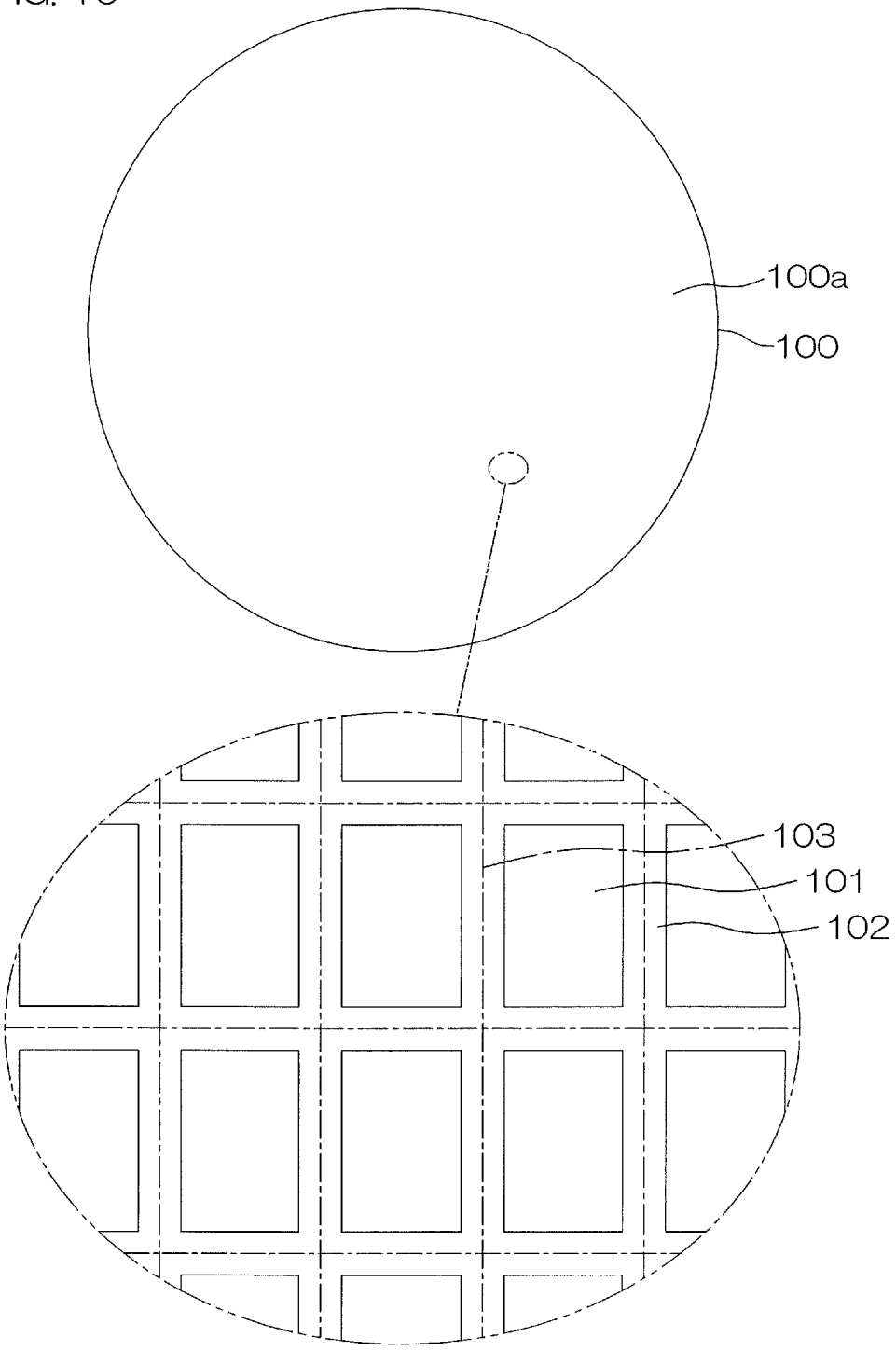

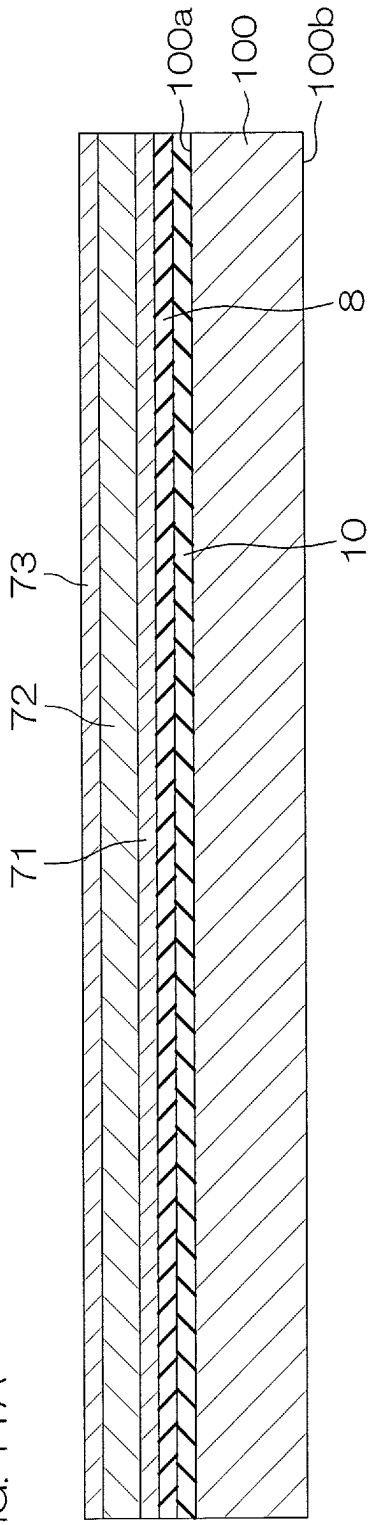

FIG. 11A

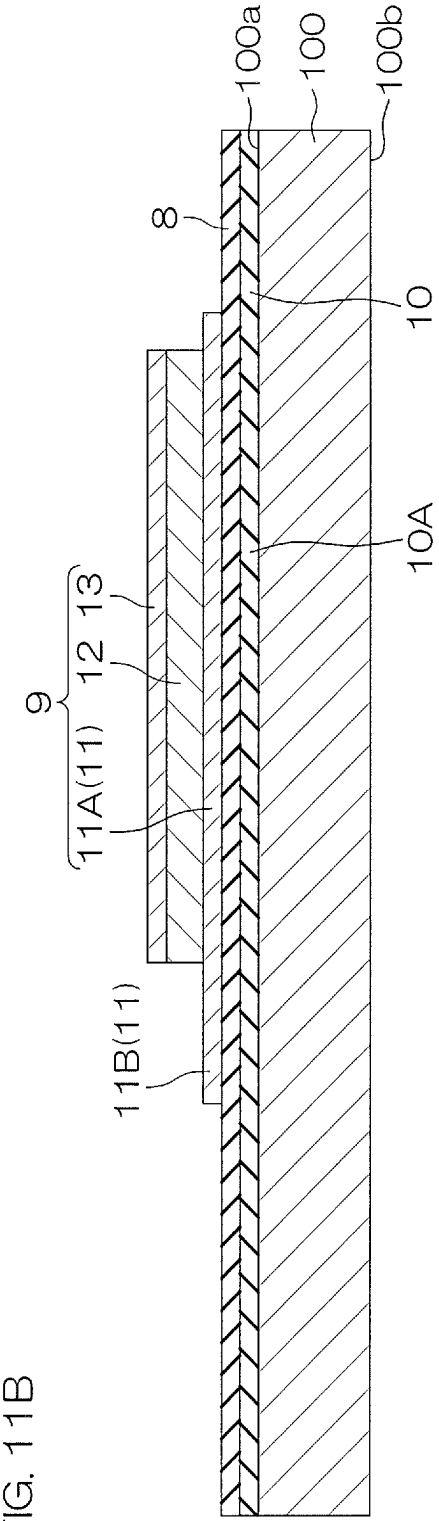

FIG. 11B

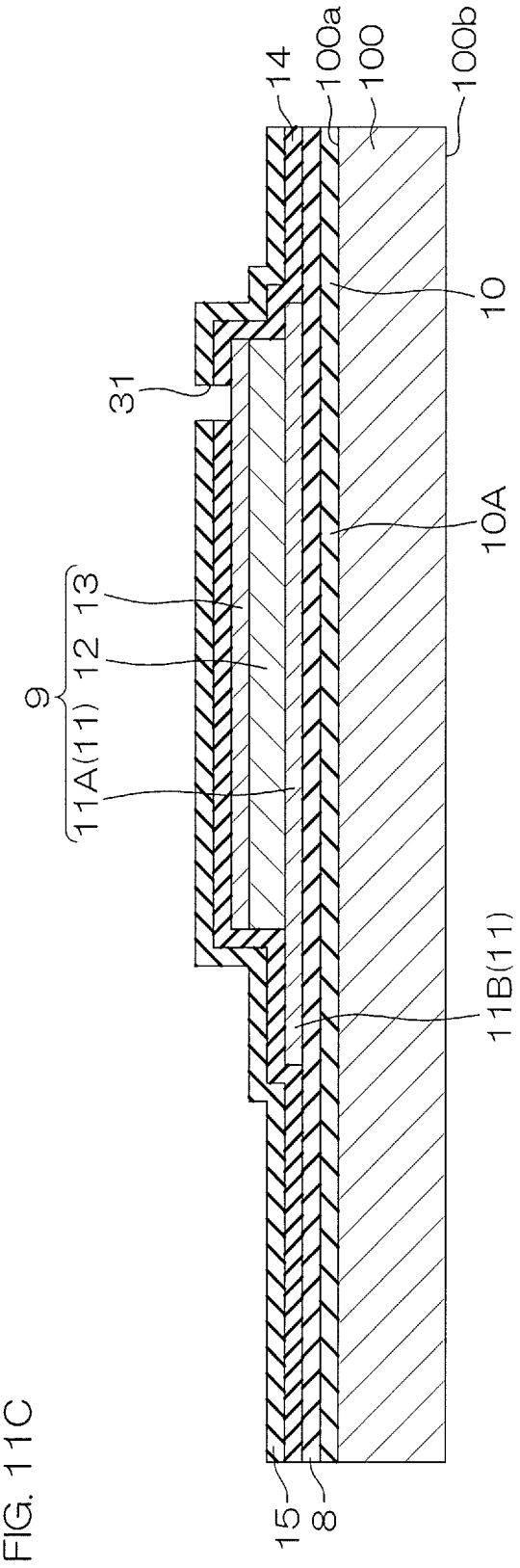

FIG. 11C

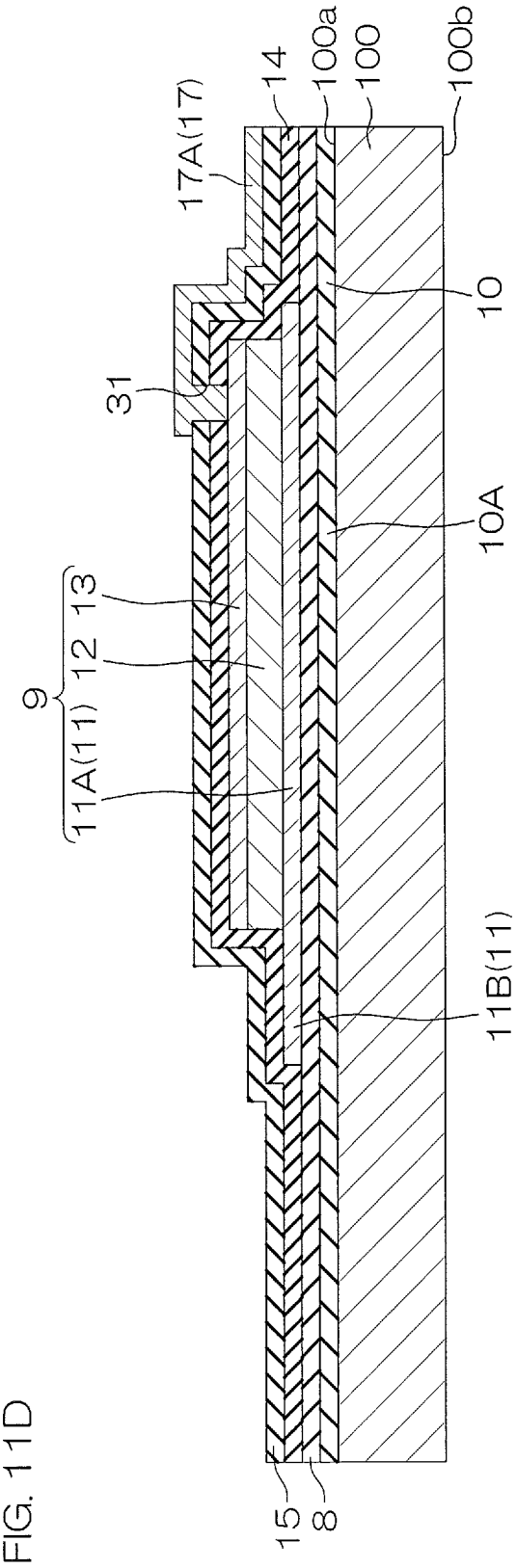

FIG. 11D

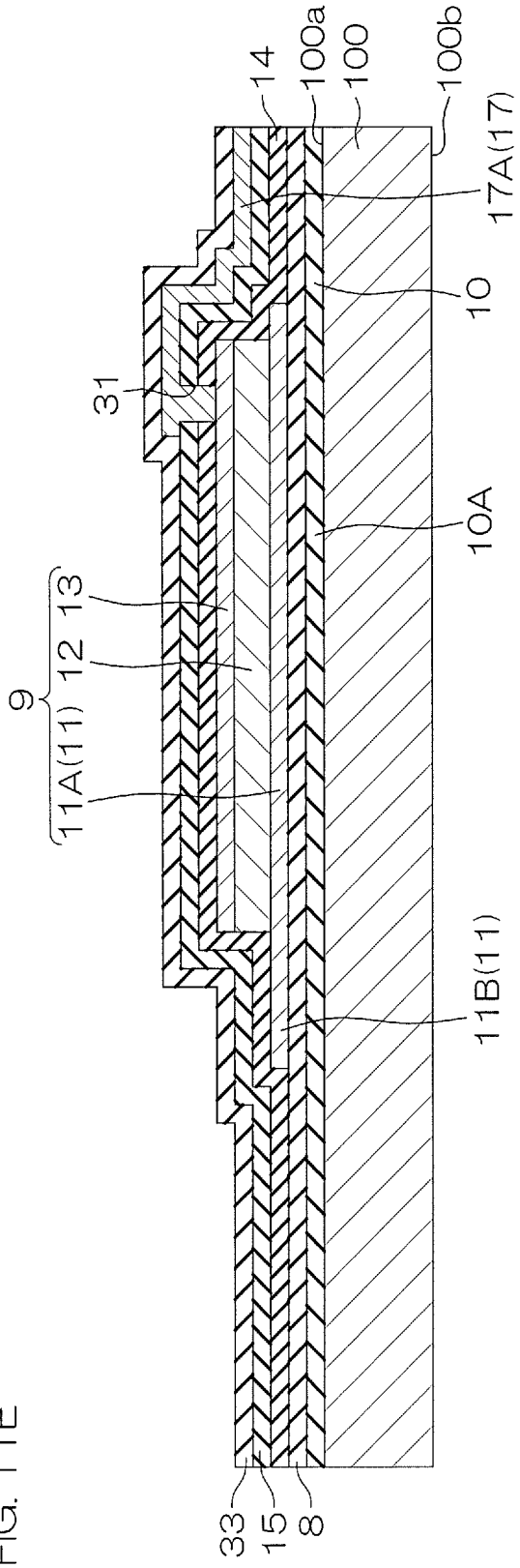

FIG. 11E

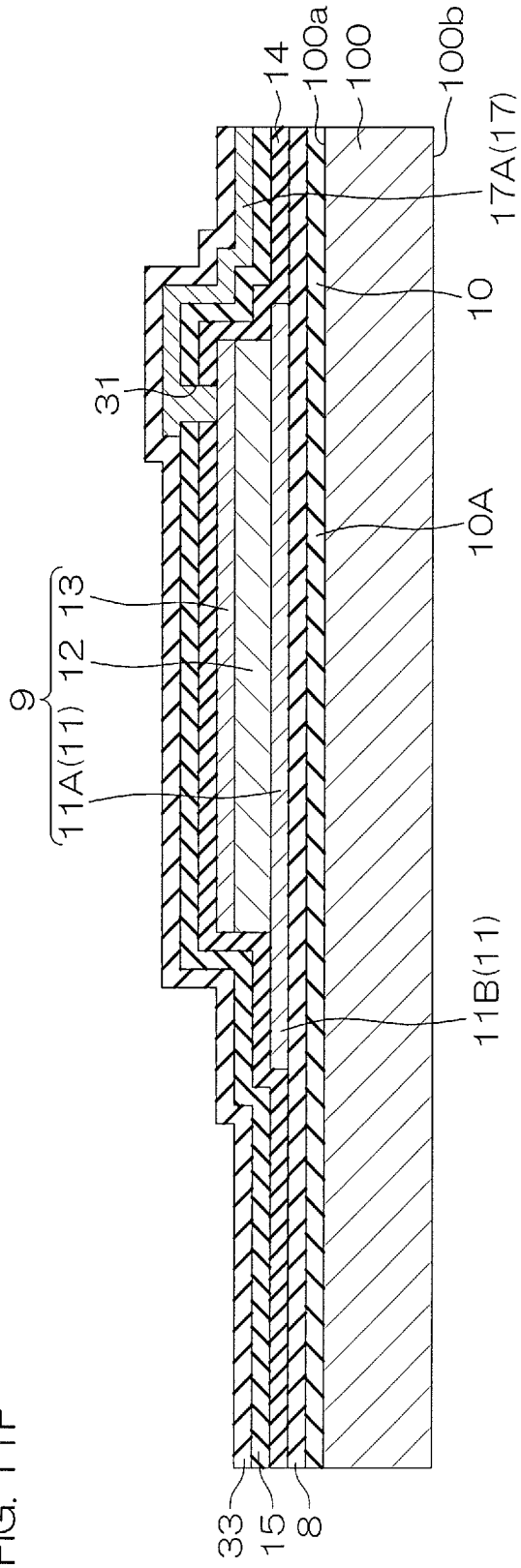

FIG. 11F

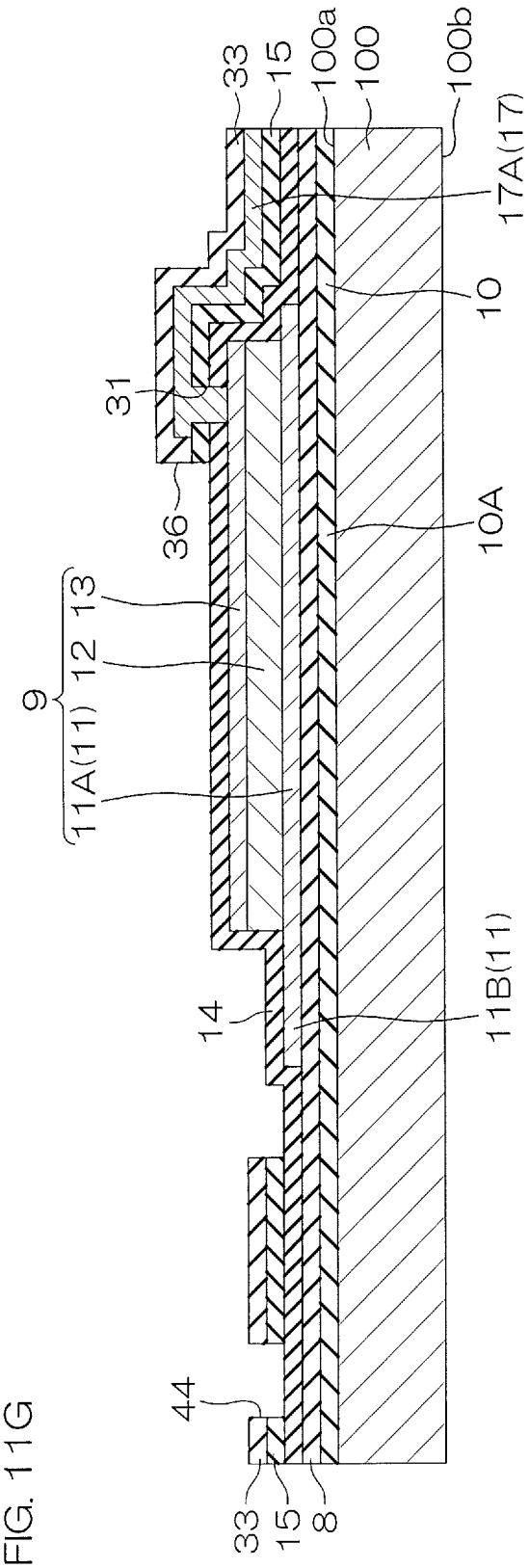
33
15
100a
100
100b
17A(17)
10
31
36
10A
9
11A(11)
12
13
14
11B(11)
44
33
15
8

FIG. 11G

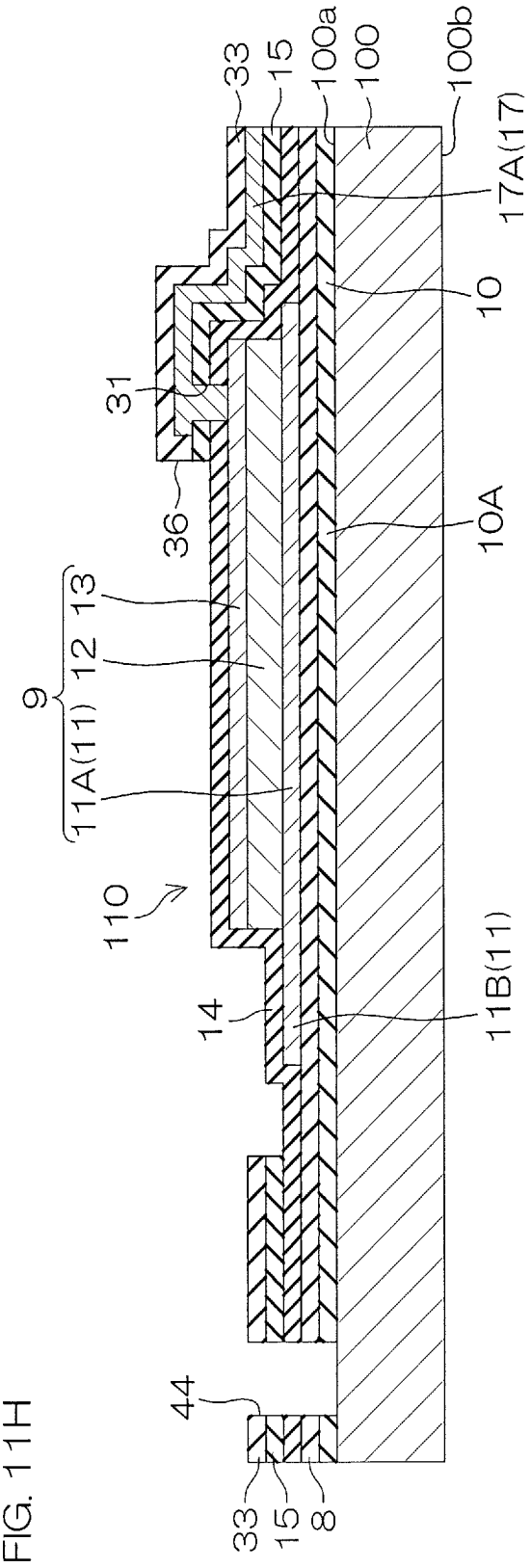
33
15
100a
100
100b
17A(17)
10
31
36
10A
13
12
9
11A(11)
110
14
11B(11)
44
33
15
8

FIG. 11H

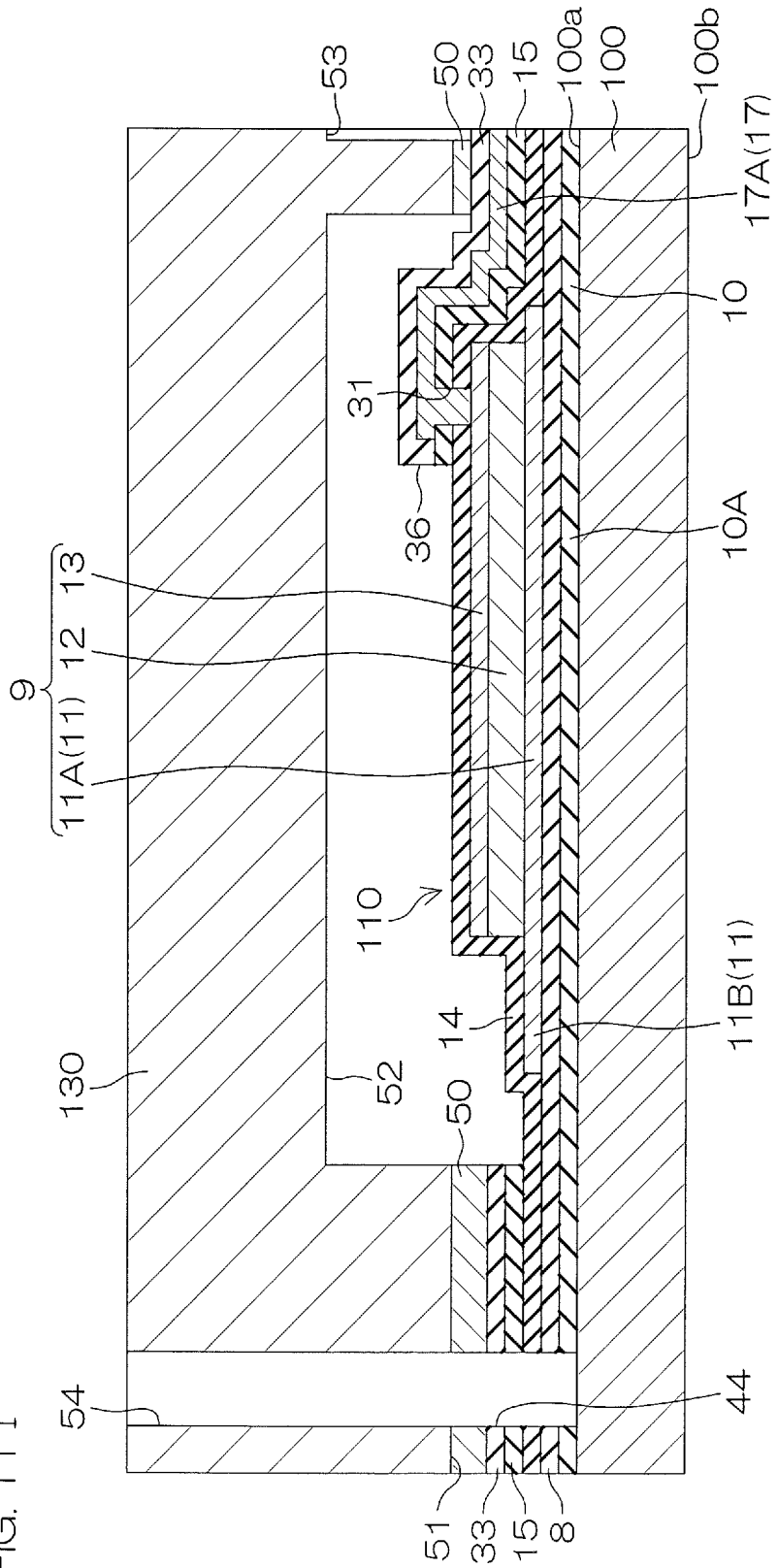
53
50
33
15
100a
100
100b
17A(17)
10
31
36
10A
13
12
9
11A(11)
110
11B(11)
14
130
52
50
54
44
51
33
15
8

FIG. 11 I

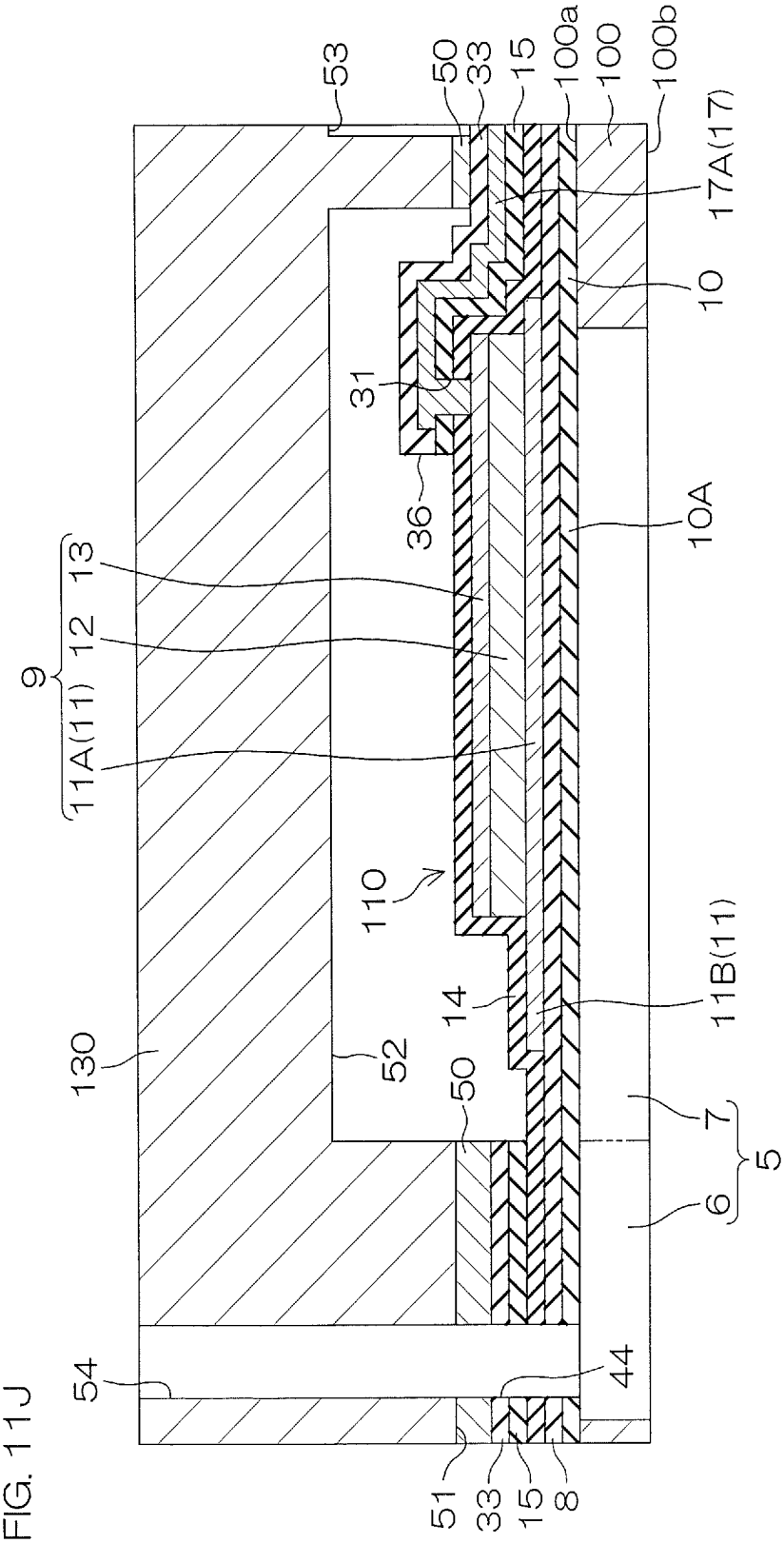
53
50
33
15
100a
100
100b
17A(17)
10
31
36
10A
13
12
9
11A(11)
110
11B(11)
14
130
52
50
7
5
6
54
44
51
33
15
8

FIG. 11J

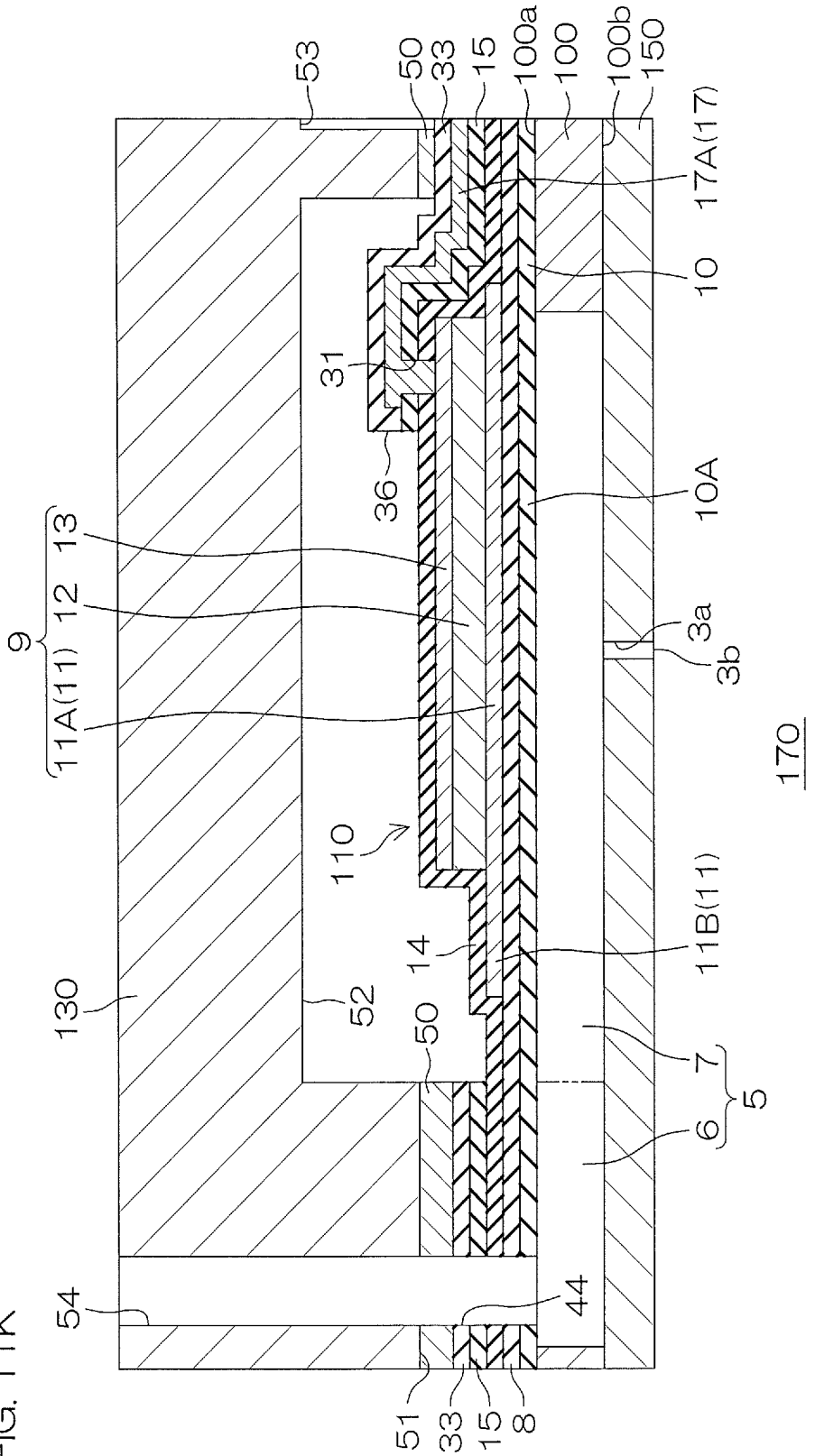
53
50
33
15
100a
100
100b
150
17A(17)
10
31
36
10A
13
12
9
11A(11)
3a
3b
170
110
11B(11)
14
130
52
50
7
5
6
54
44
51
33
15
8

FIG. 11K

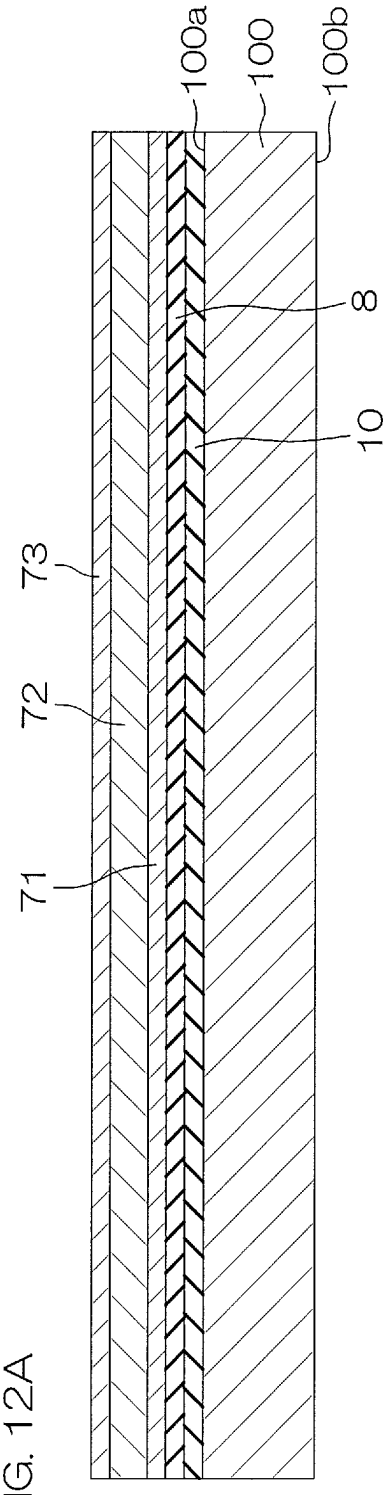

FIG. 12A

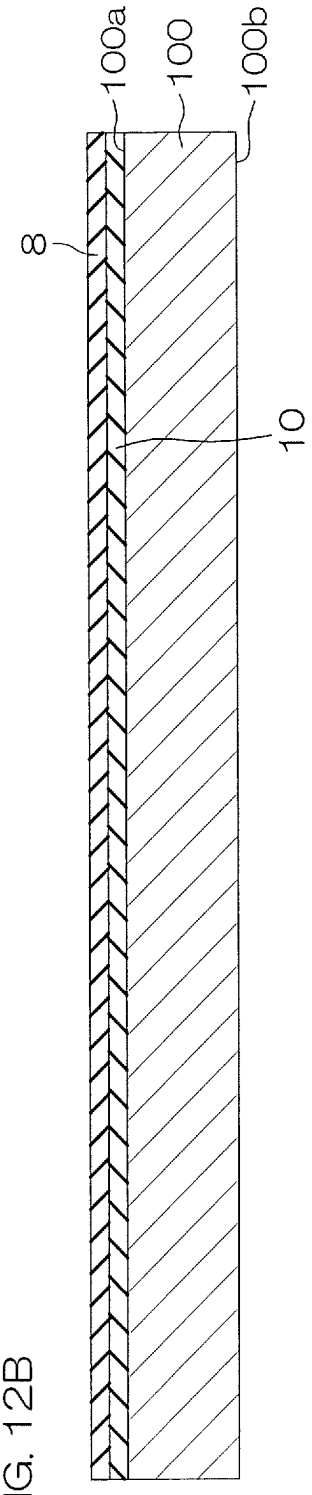

FIG. 12B

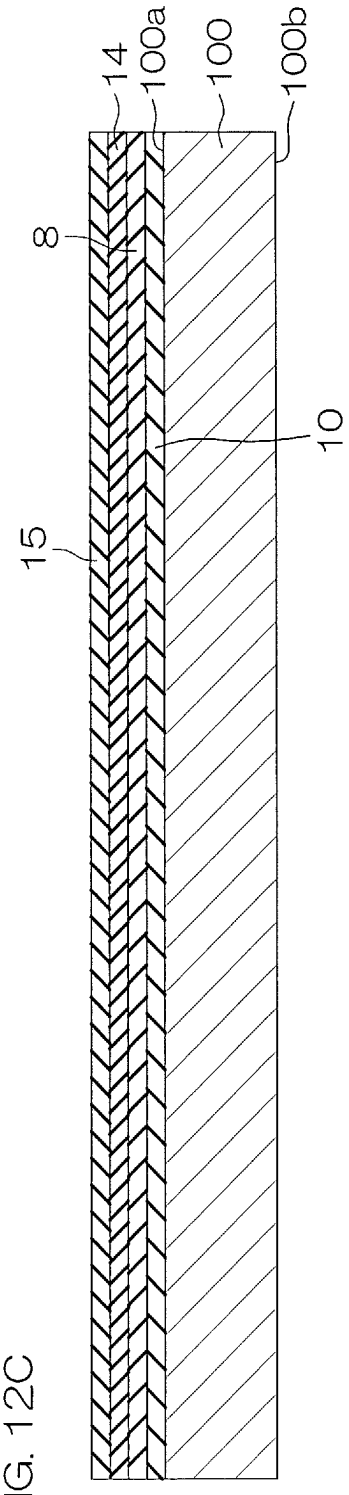

FIG. 12C

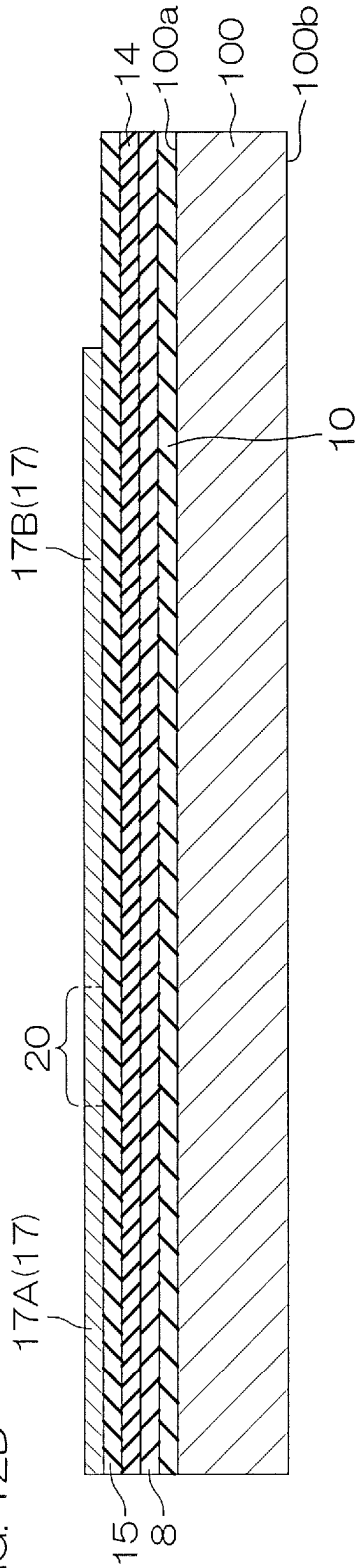

FIG. 12D

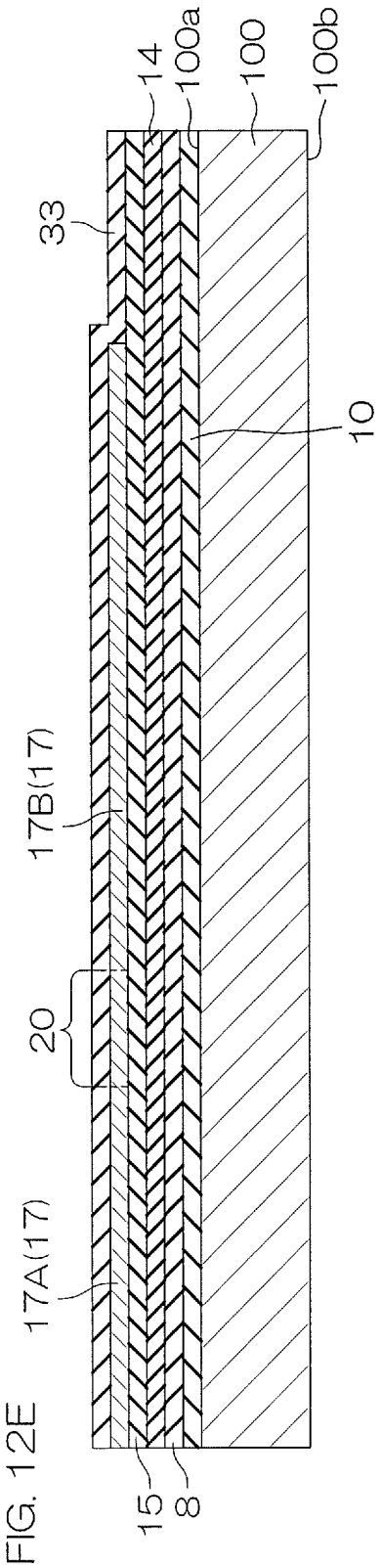

FIG. 12E

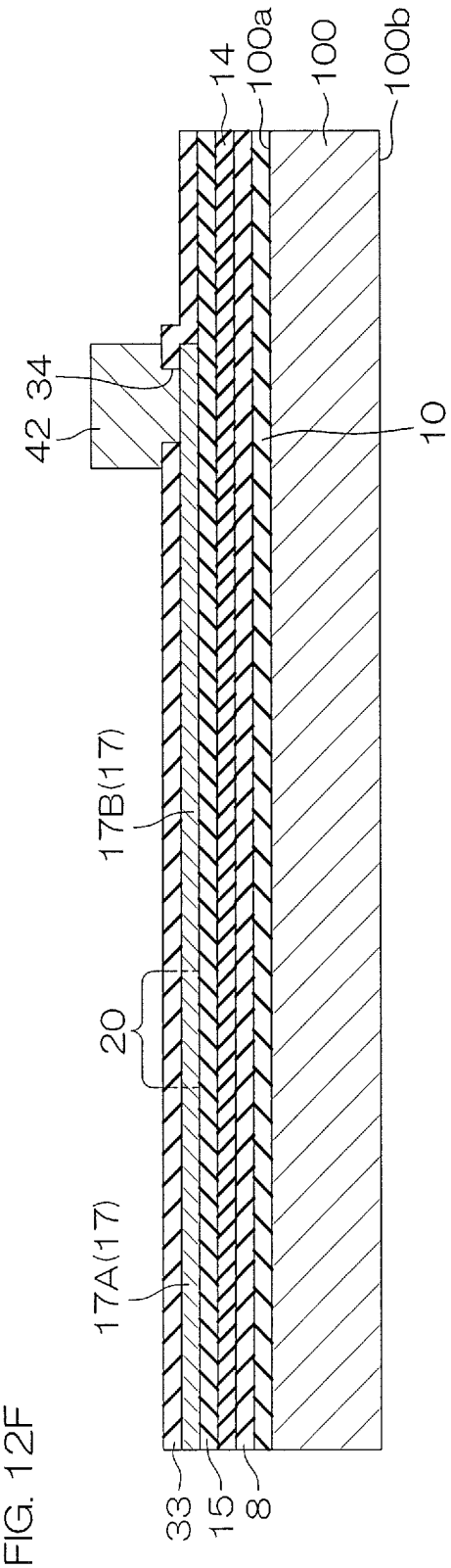

FIG. 12F

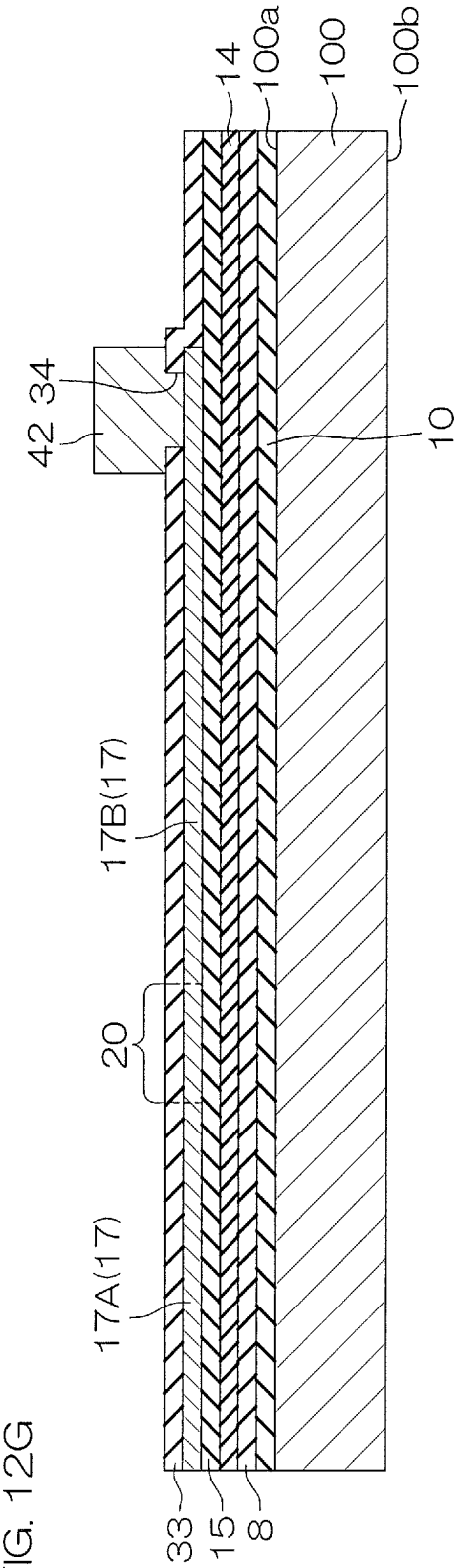

FIG. 12G

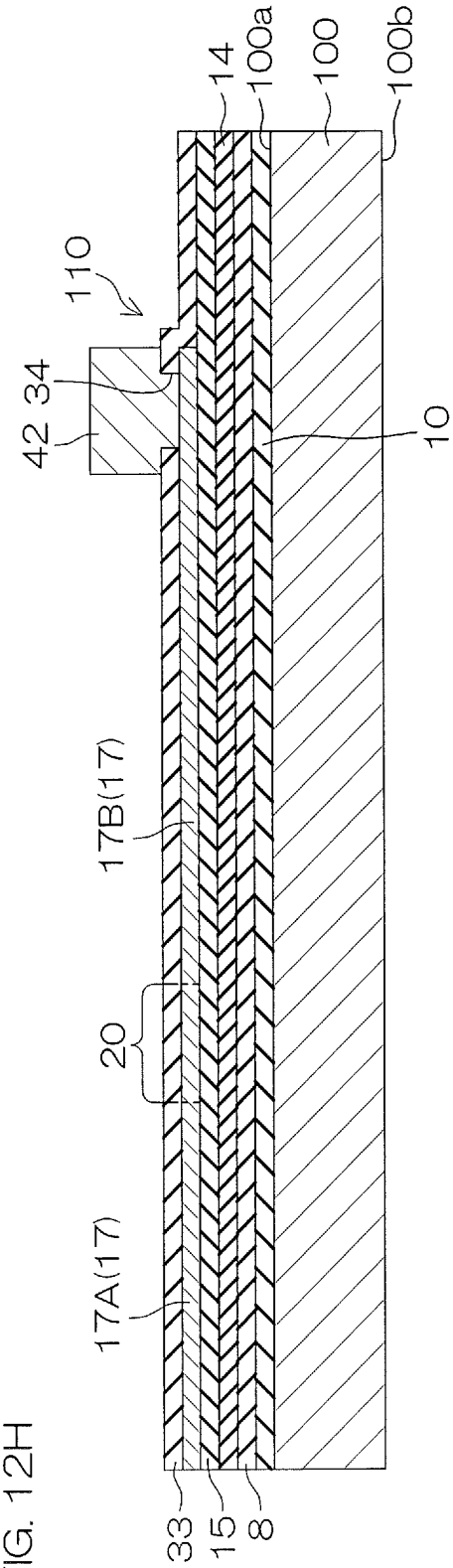

FIG. 12H

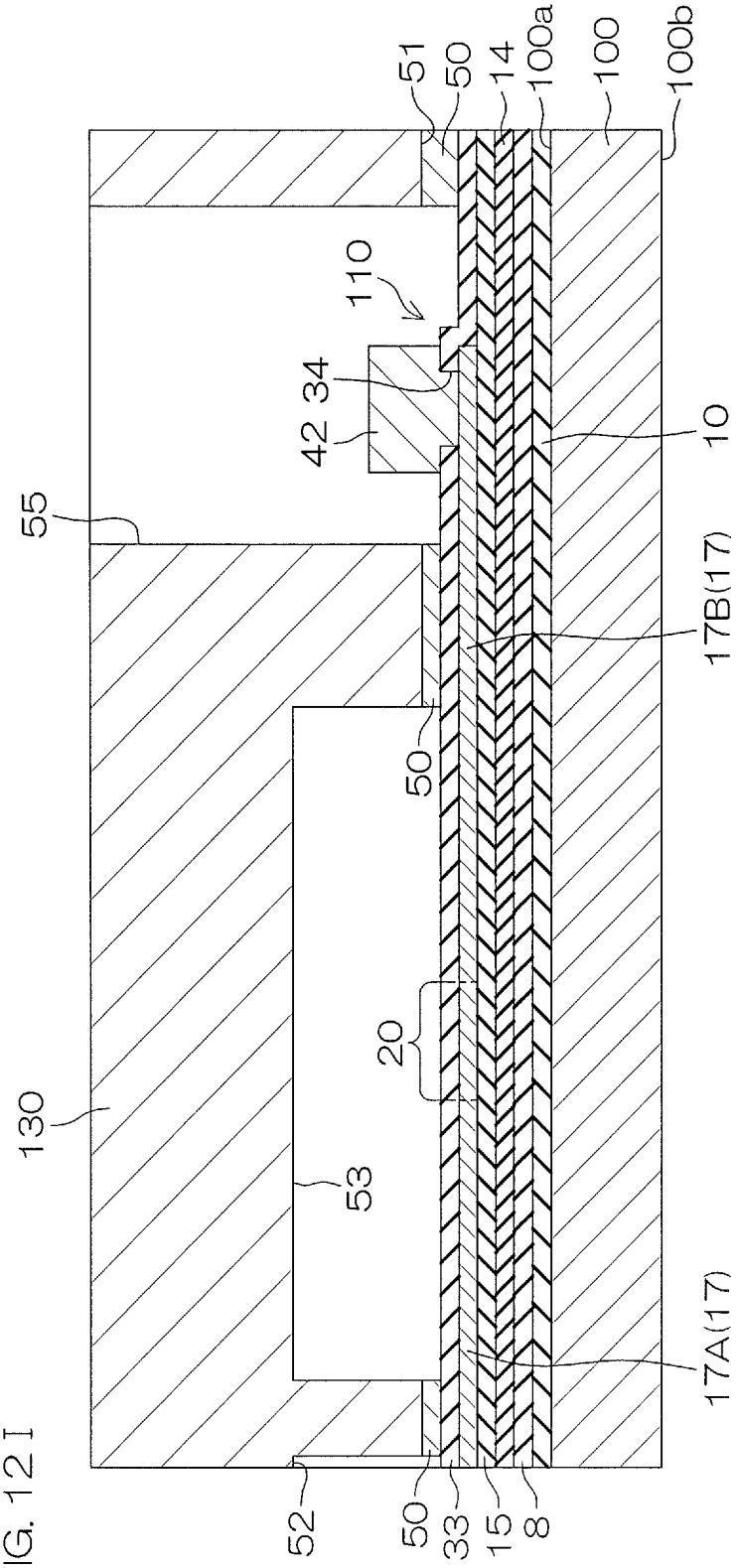
51
50
14
100a
100
100b
110
34
42
10
55
17B(17)
50
20
130
53
17A(17)
52
50
33
15
8

FIG. 12 I

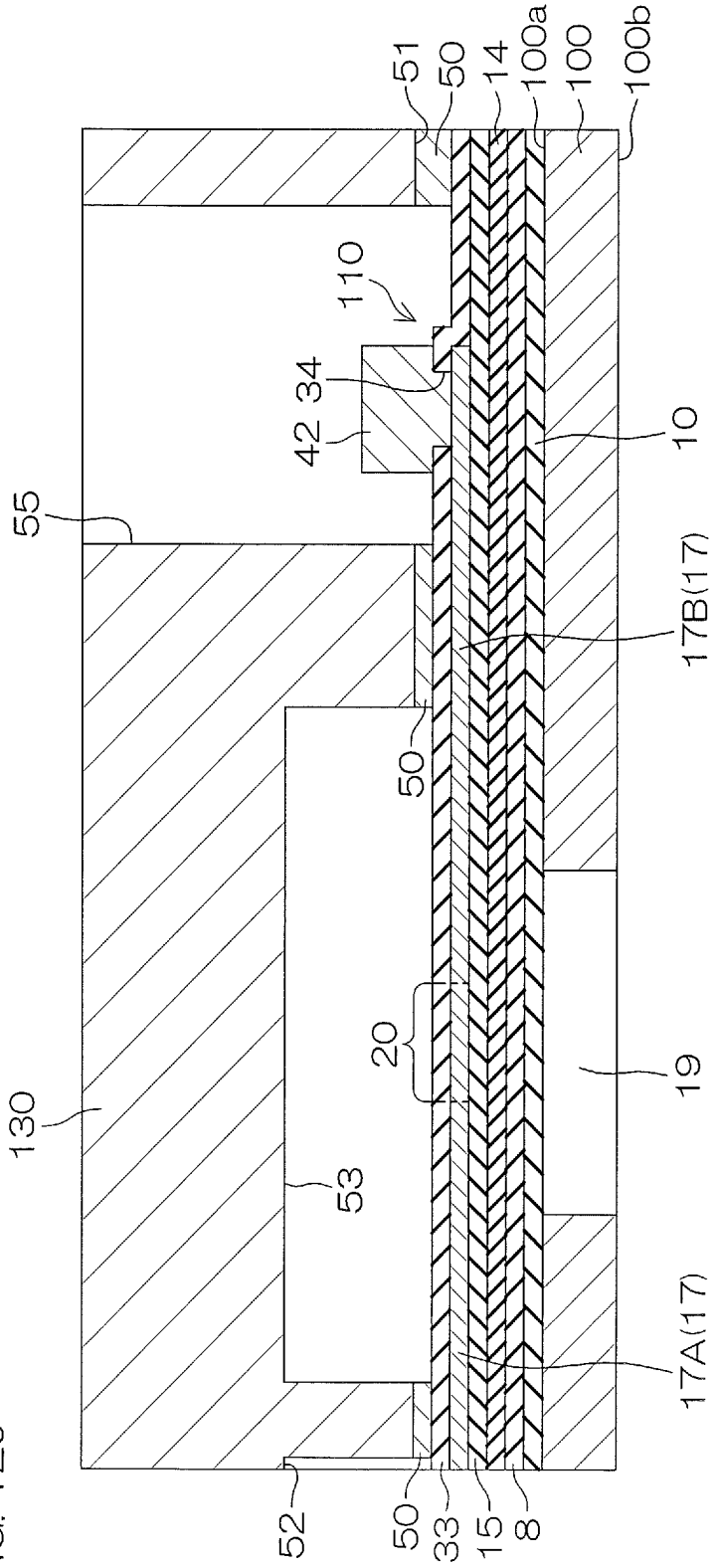
51
50
14
100a
100
100b
110
34
42
10
55
17B(17)
50
20
19
130
53
17A(17)
52
50
33
15
8

FIG. 12J

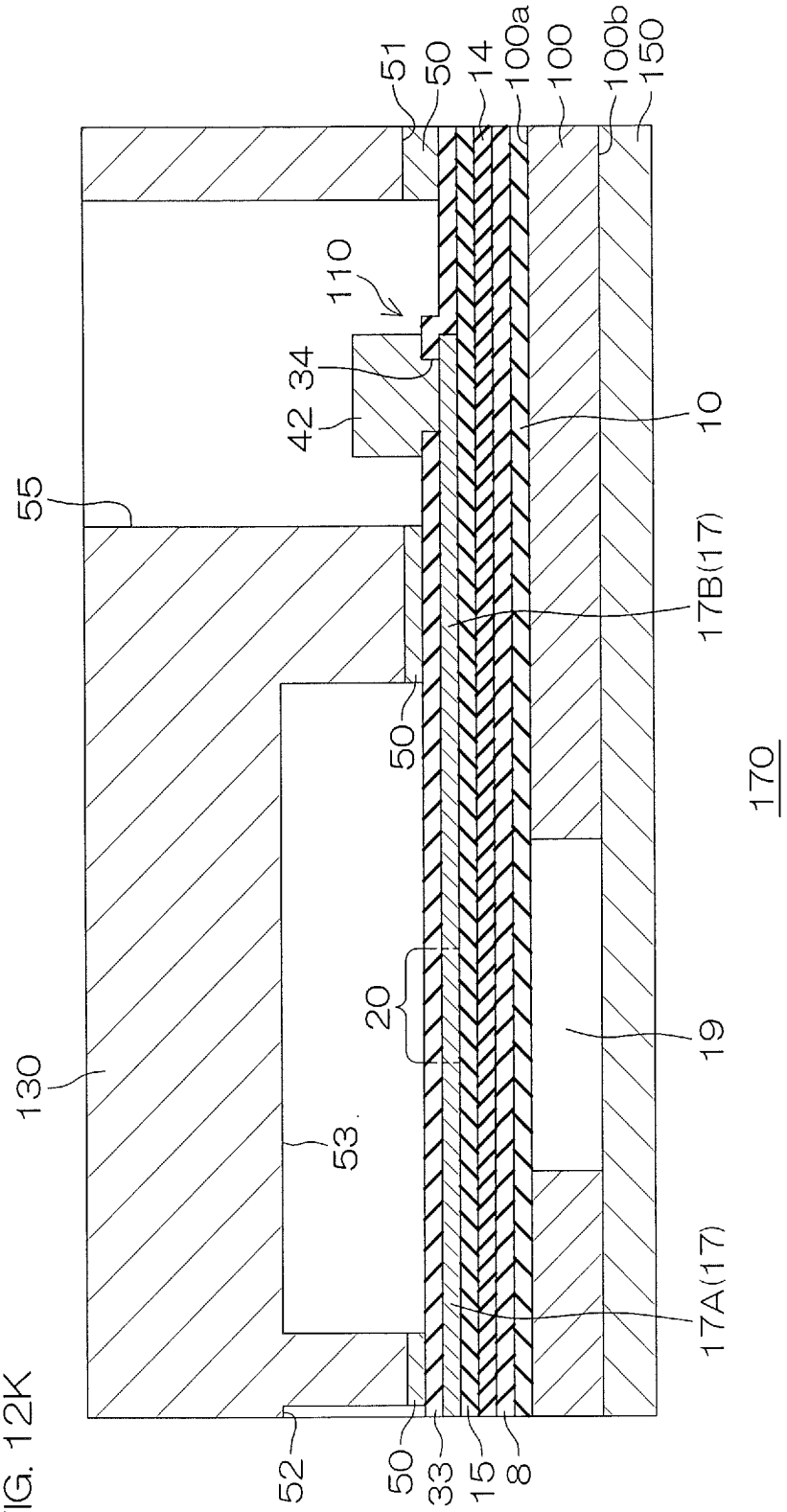
51
50
14
100a
100
100b
150
110
34
42
10
55
17B(17)
50
170
20
19
130
53
17A(17)
52
50
33
15
8

FIG. 12K

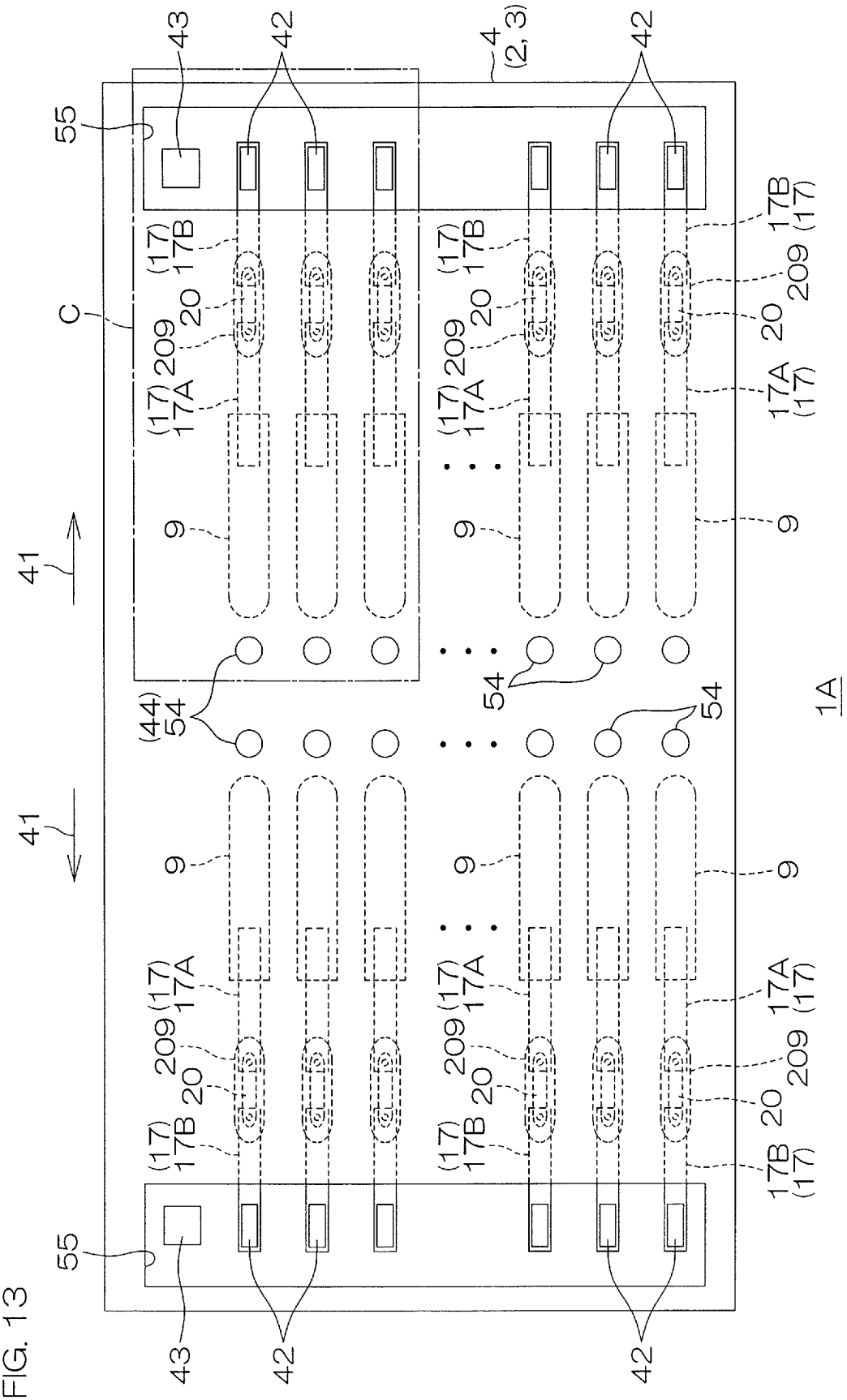
43
42
4
(2, 3)
42
55
C
(17)
17B
20
209
(17)
17A
9
41
(44)
54
54
54
1A
41
9
(17)
17A
209
20
(17)
17B
55
43
42
42
17B
(17)
209
20
17A
(17)

FIG. 13

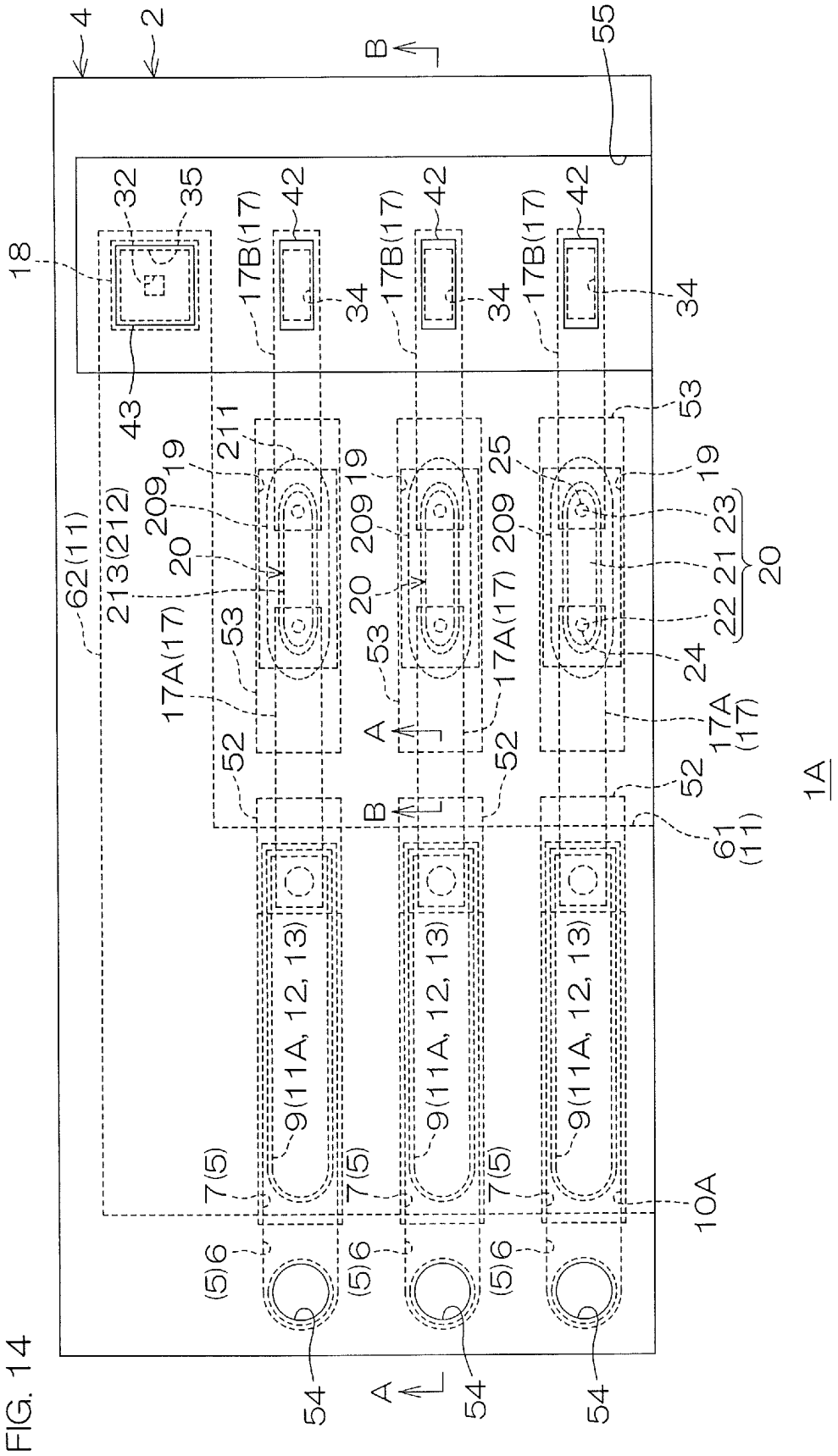
4
2
B
55
18
32
35
17B(17)
42
34
43
211
19
209
20
213(212)
62(11)
53
25
23
21
22
24
17A(17)
A
52
61
(11)
1A
9(11A, 12, 13)
7(5)
10A
(5)6
54

FIG. 14

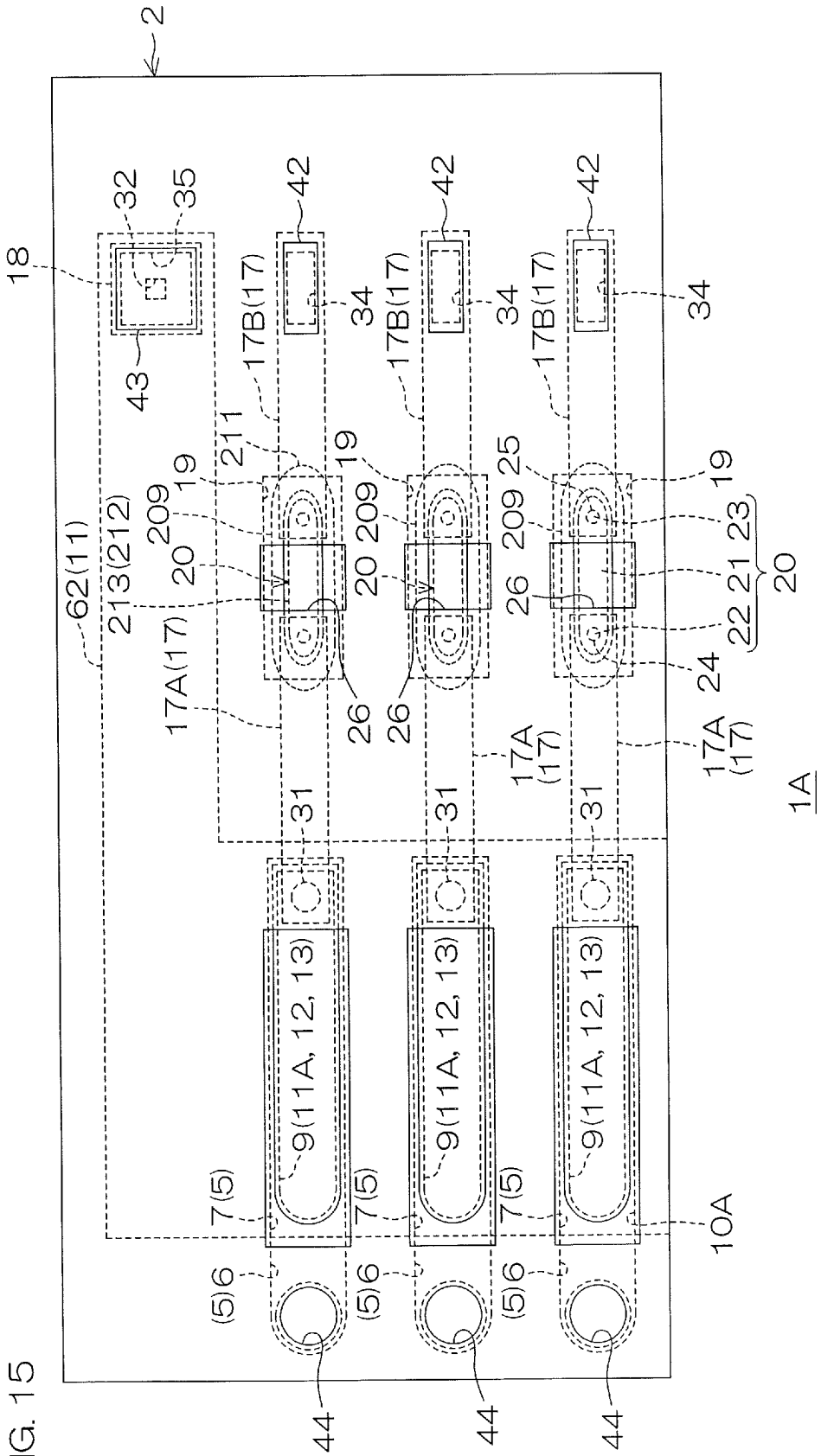
2
18
32
35
43
42
42
42
34
34
34
17B(17)
17B(17)
17B(17)
62(11)
213(212)
209
19
211
19
209
20
20
209
25
19
23
21
20
22
24
26
26
26
17A(17)
17A (17)
17A (17)
31
31
31
9(11A, 12, 13)
9(11A, 12, 13)
9(11A, 12, 13)
7(5)
7(5)
7(5)
10A
(5)6
(5)6
(5)6
44
44
44
1A

FIG. 15

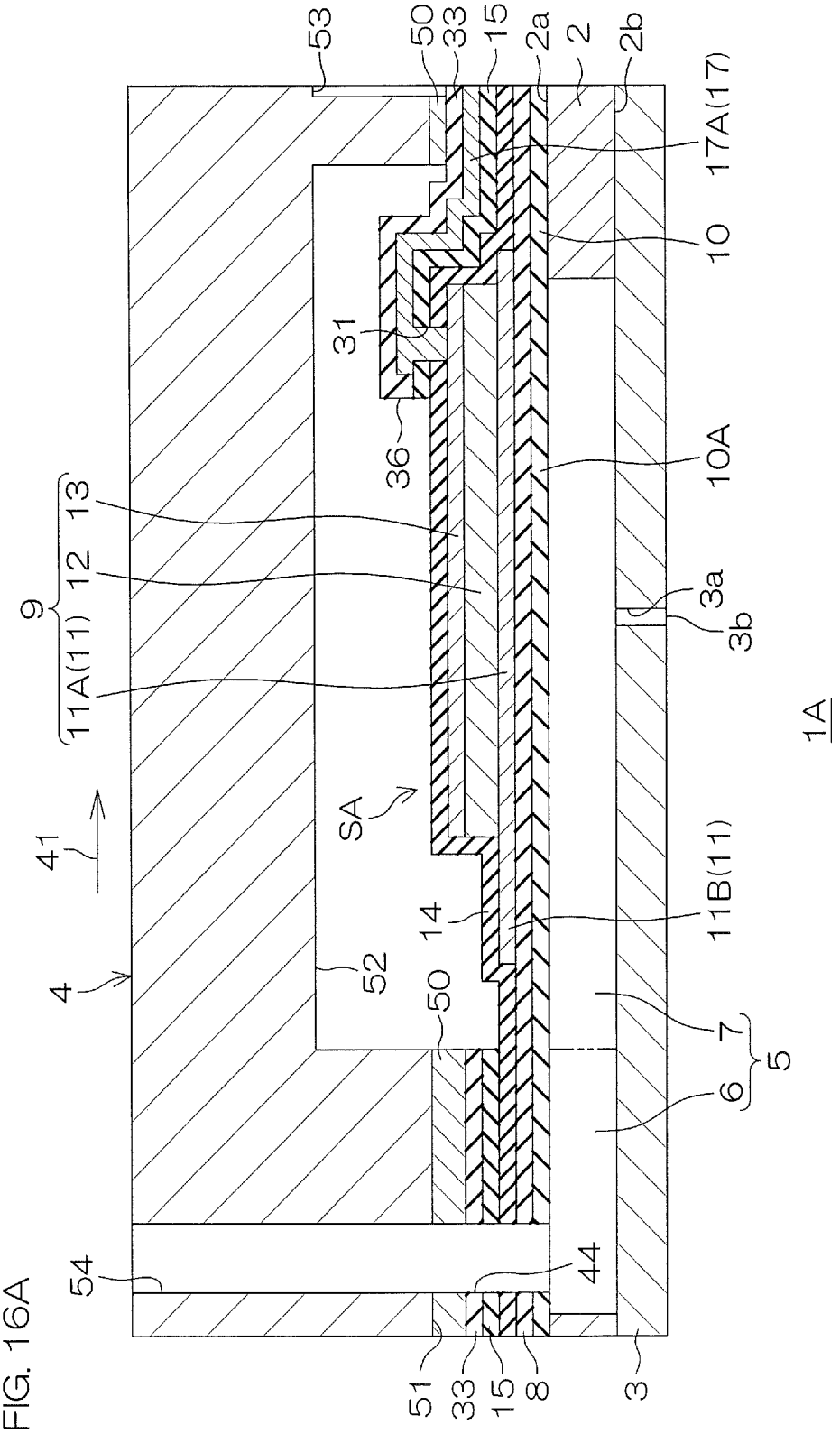
53
50
33
15
2a
2
2b
17A(17)
10
31
36
10A
13
12
9
11A(11)
3a
3b
1A
41
SA
11B(11)
14
52
50
4
7
5
6
54
44
51
33
15
8
3

FIG. 16A

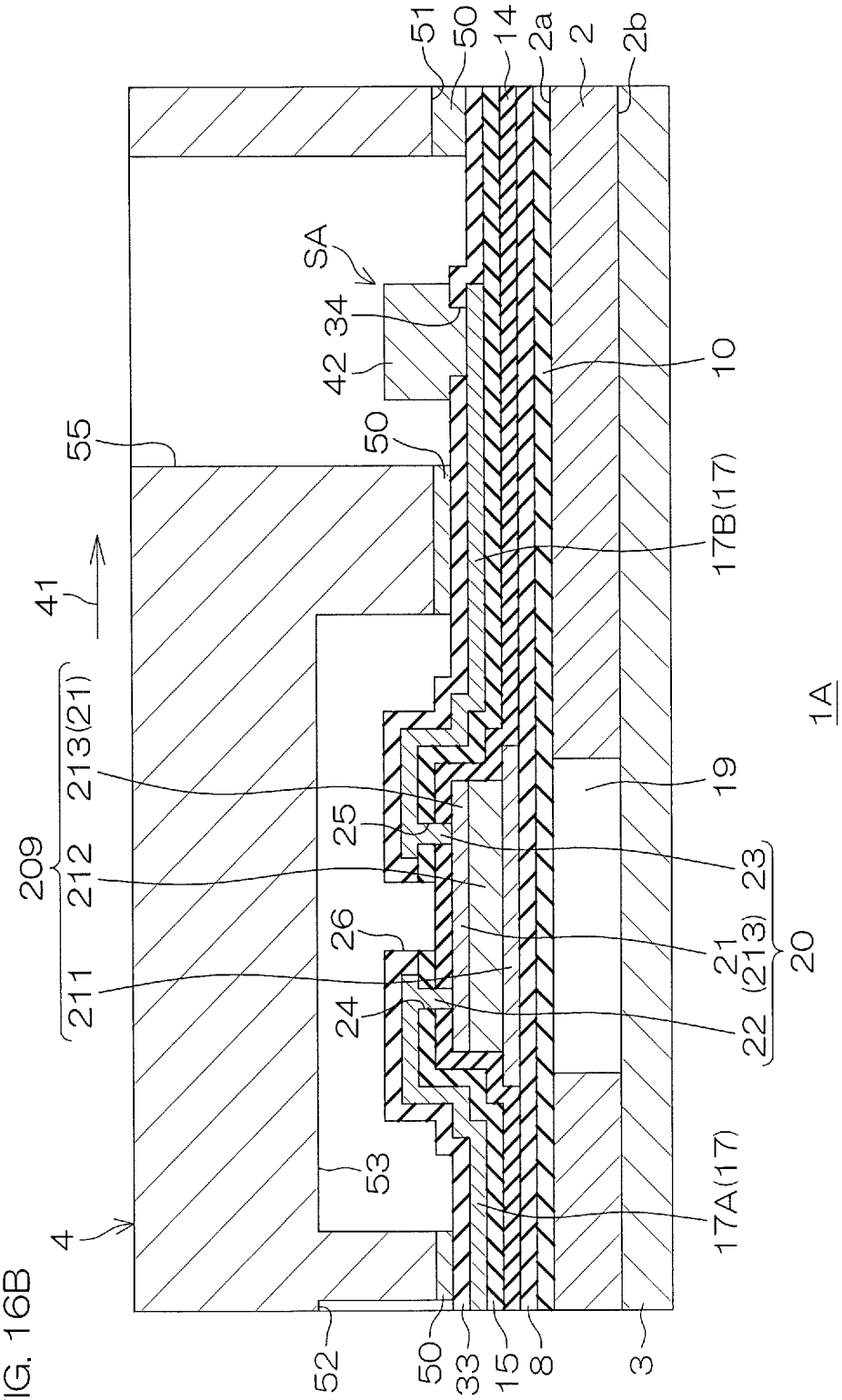
51
50
14
2a
2
2b
SA
34
42
10
55
50
17B(17)
41
213(21)
209
212
211
25
26
24
23
21
(213)
20
22
19
53
4
17A(17)
52
50
33
15
8
3
1A

FIG. 16B

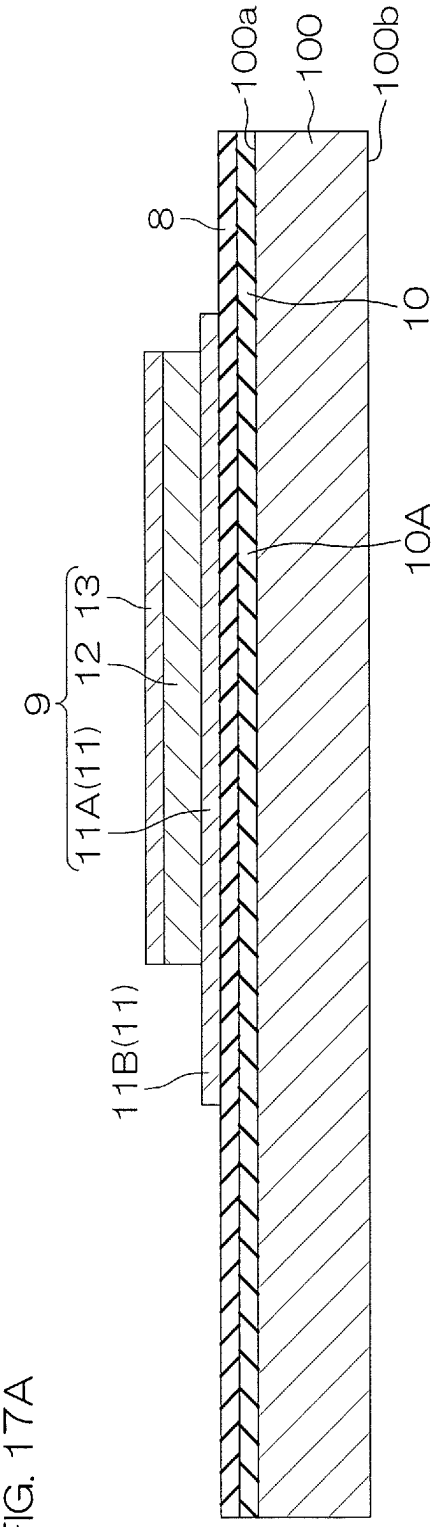

FIG. 17A

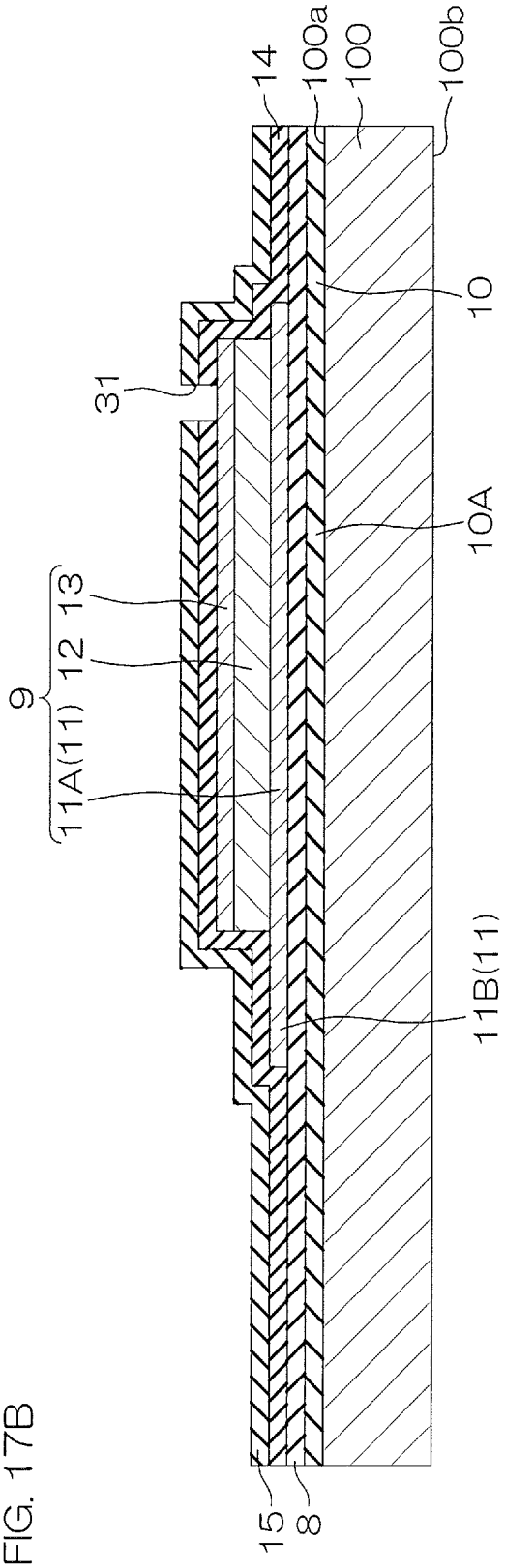

FIG. 17B

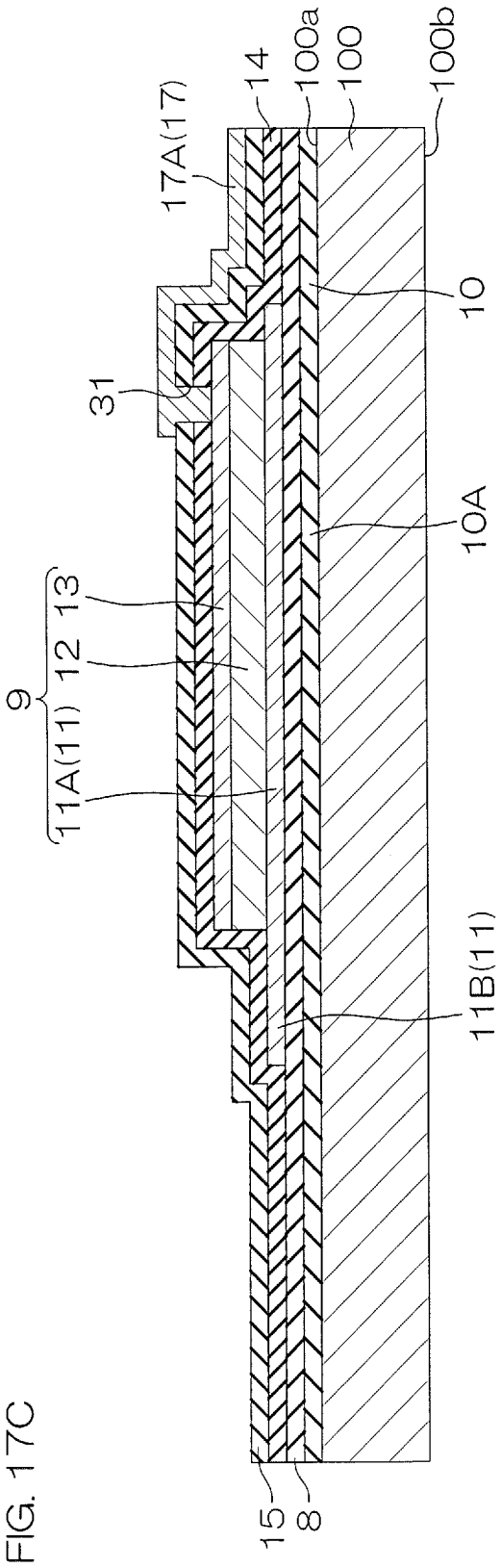

FIG. 17C

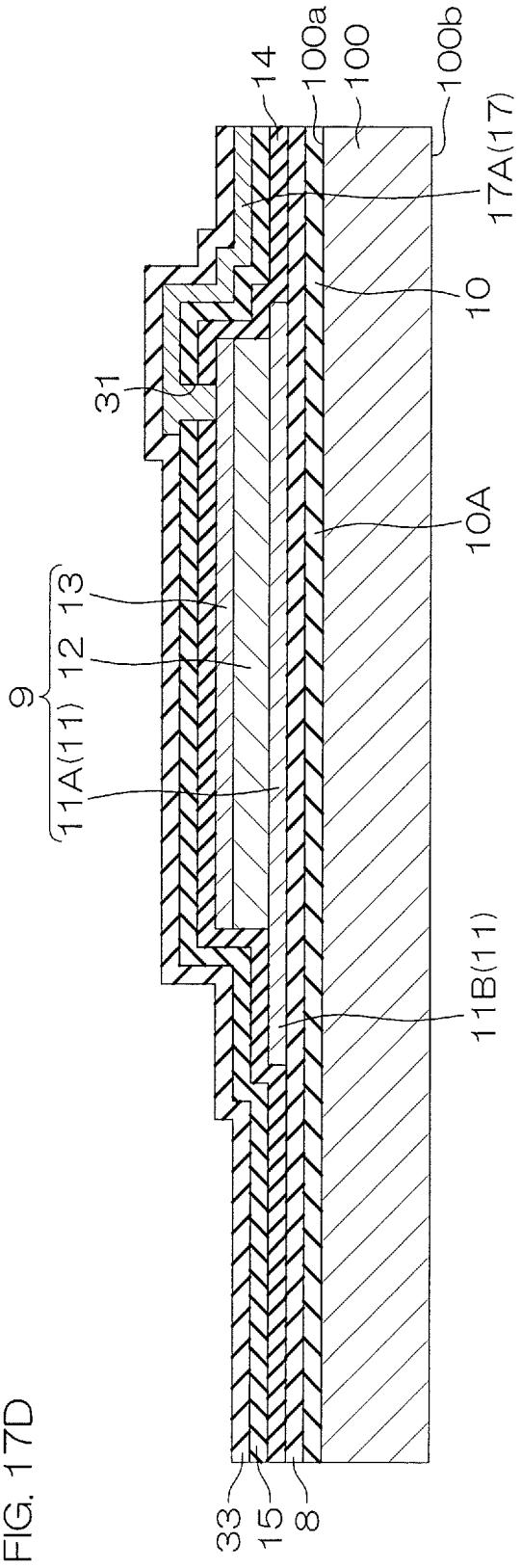

FIG. 17D

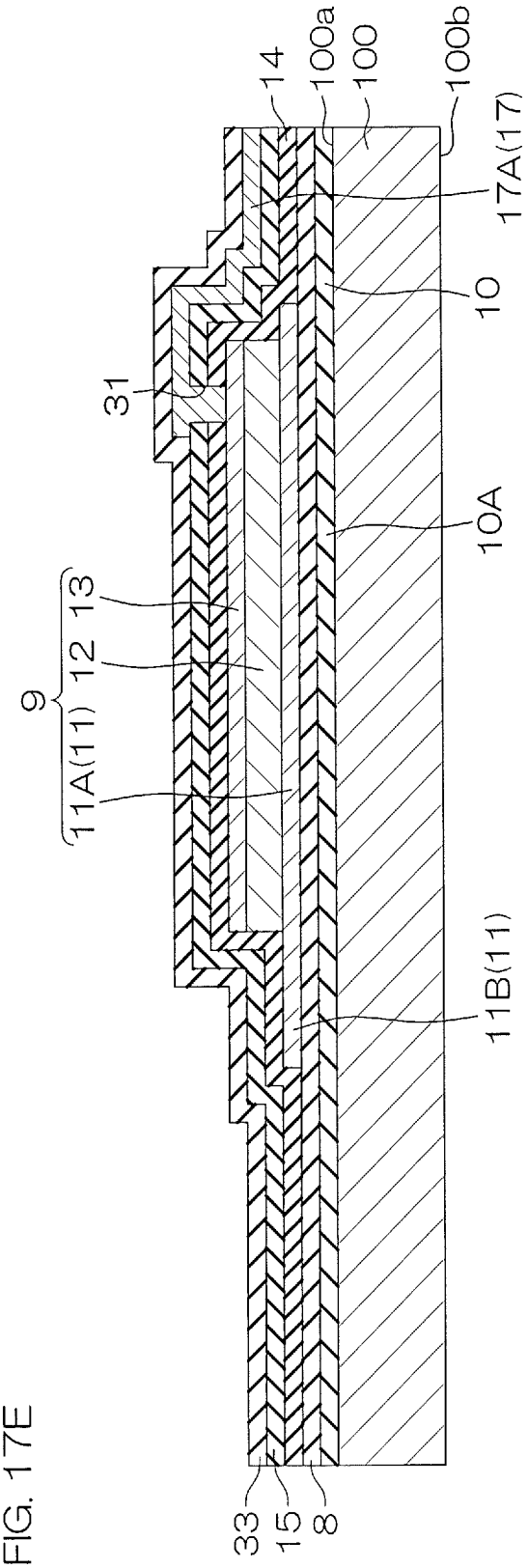

FIG. 17E

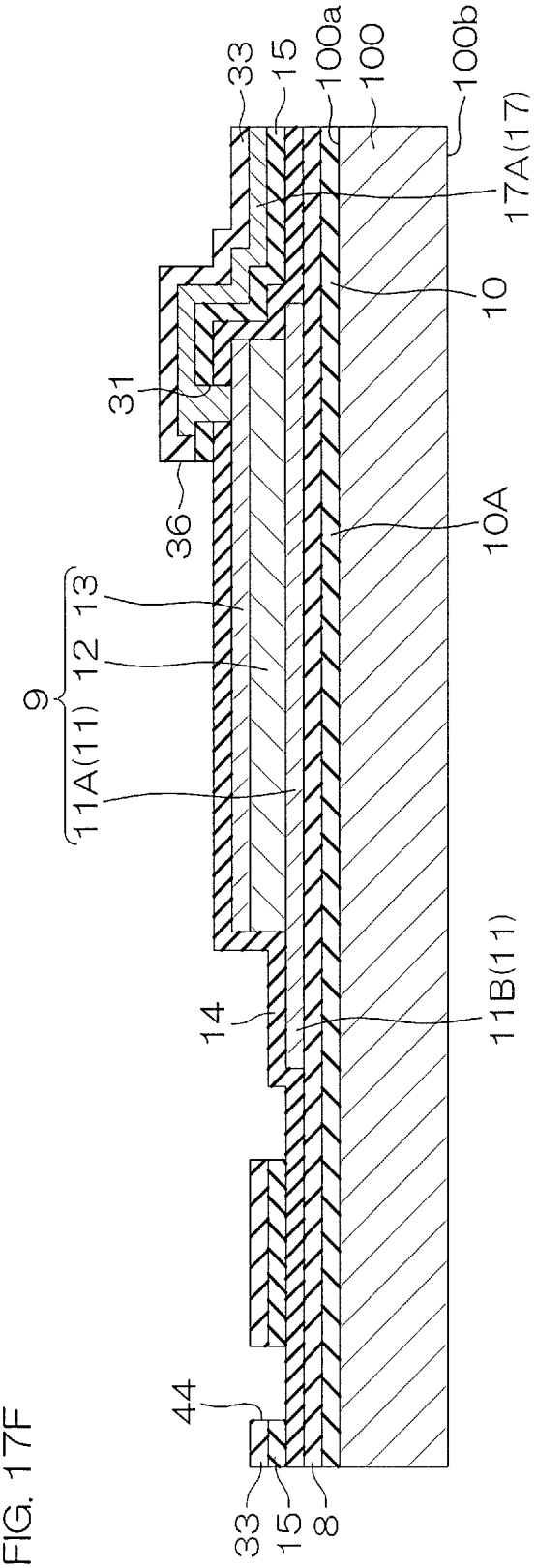
33
15
100a
100
100b
17A(17)
10
31
36
10A
9
11A(11)
12
13
14
11B(11)
44
33
15
8

FIG. 17F

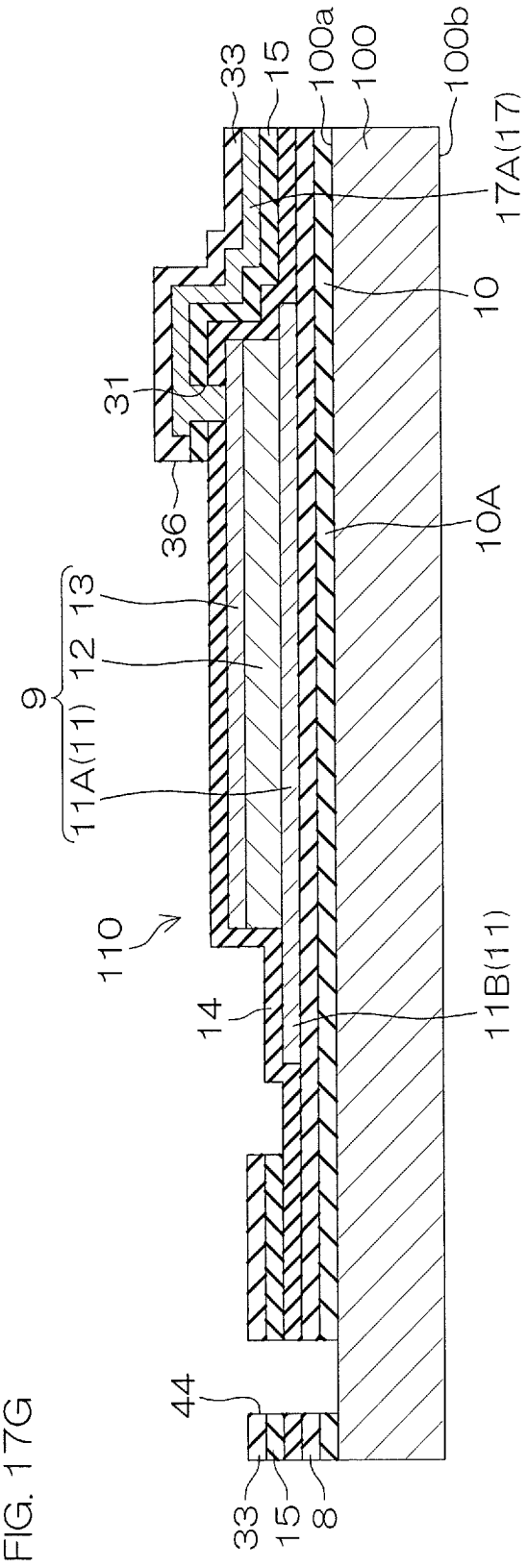
33
15
100a
100
100b
17A(17)
10
31
36
10A
9
11A(11)
12
13
110
14
11B(11)
44
33
15
8

FIG. 17G

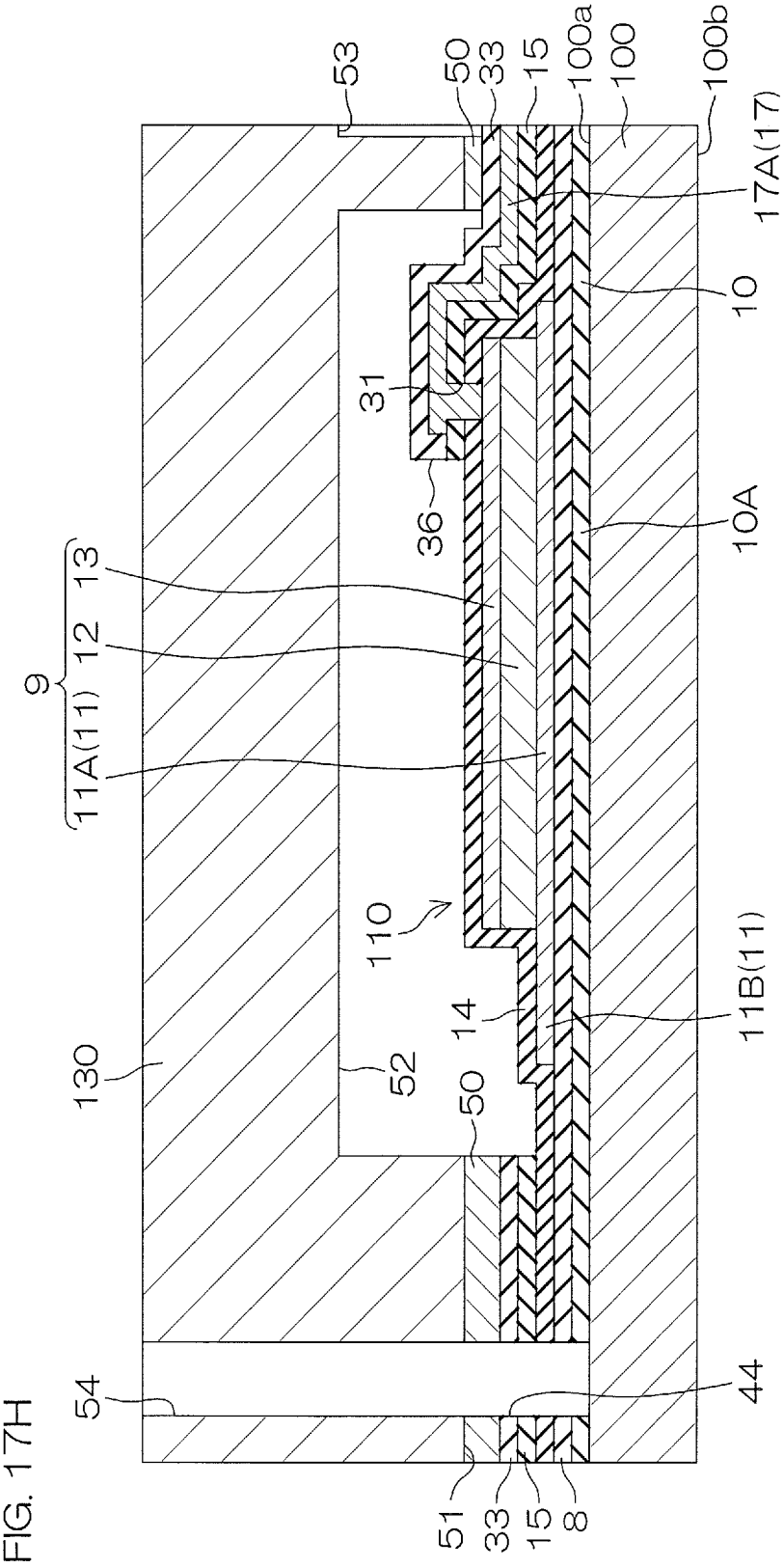
53
50
33
15
100a
100
100b
17A(17)
10
31
36
10A
13
12
9
11A(11)
110
14
11B(11)
130
52
50
54
44
51
33
15
8

FIG. 17H

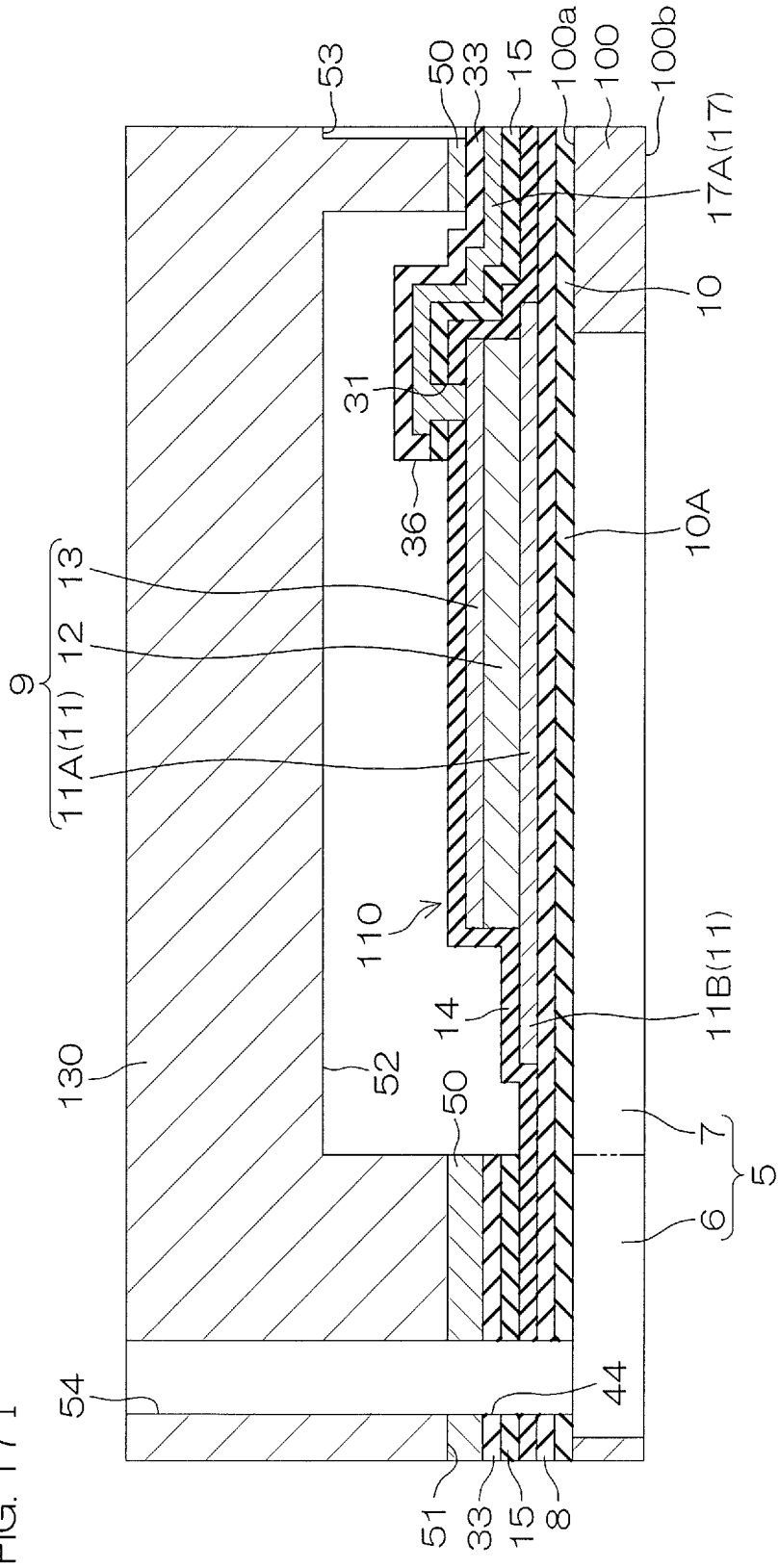
53
50
33
15
100a
100
100b
17A(17)
10
31
36
10A
13
12
9
11A(11)
110
14
11B(11)
130
52
50
7
5
6
54
44
51
33
15
8

FIG. 17 I

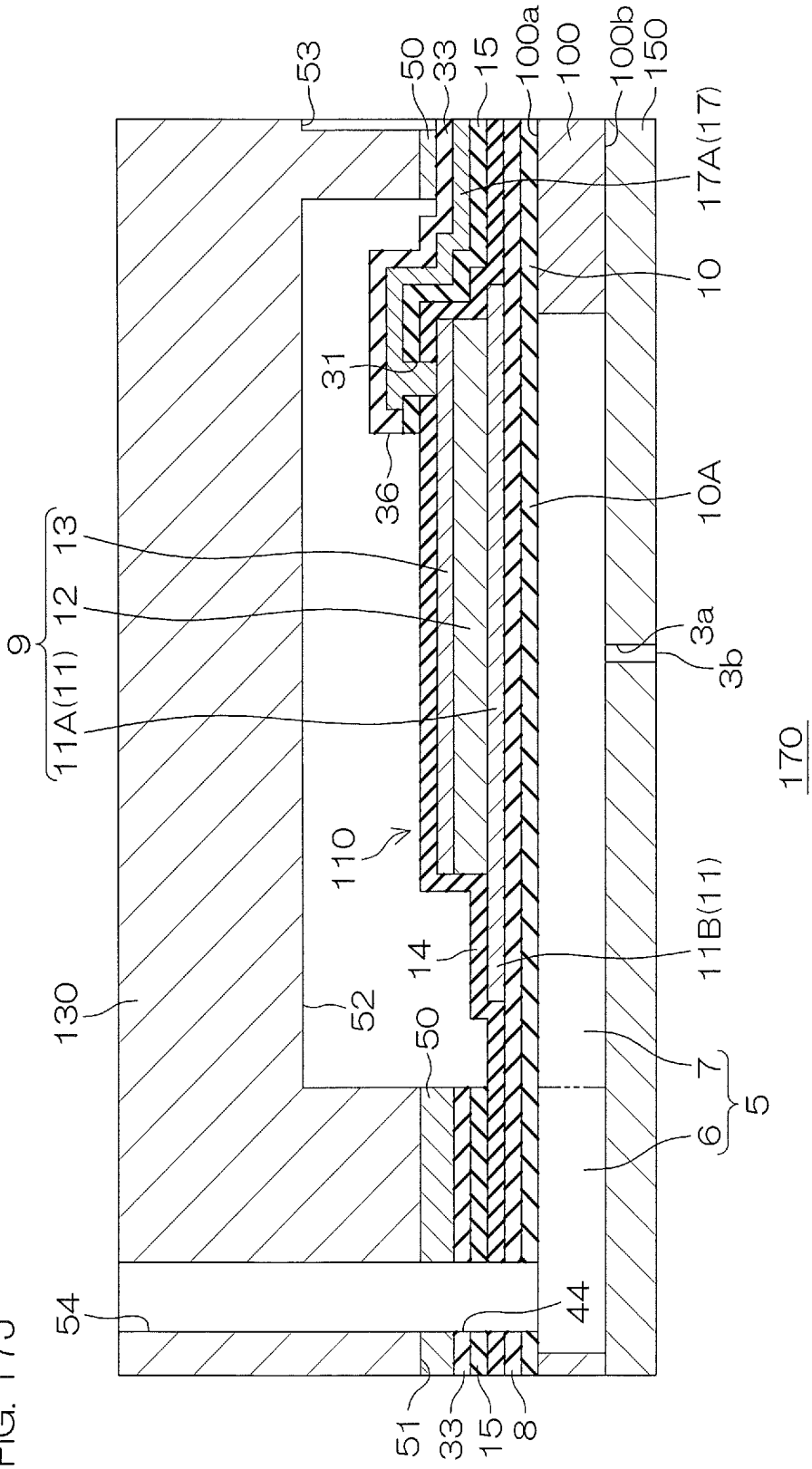
53
50
33
15
100a
100
100b
150
17A(17)
10
31
36
10A
13
12
9
11A(11)
3a
3b
170
110
11B(11)
14
130
52
50
7
5
6
54
44
51
33
15
8

FIG. 17J

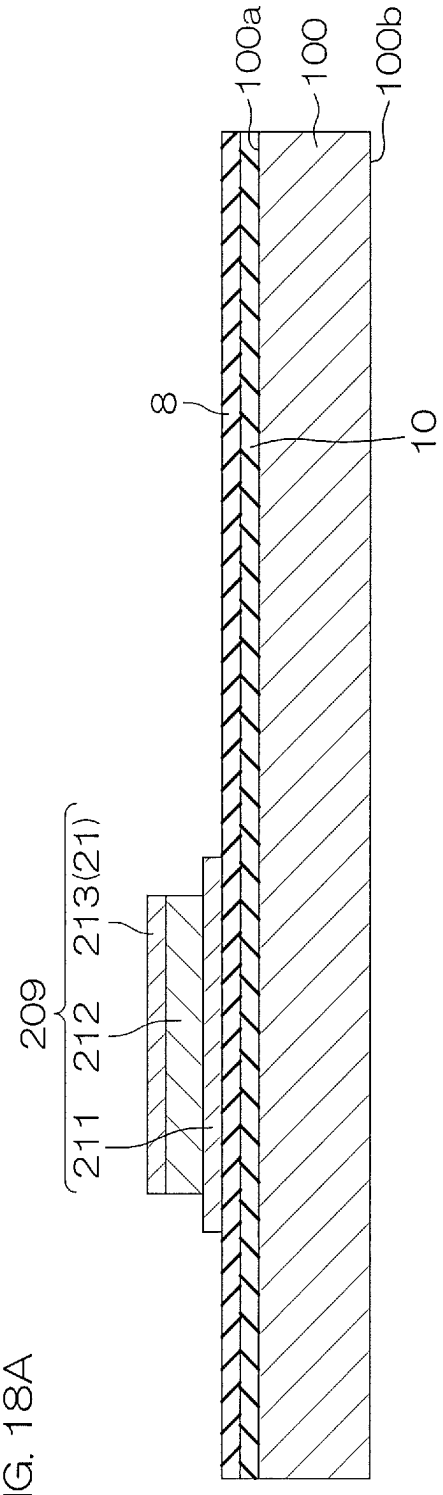

FIG. 18A

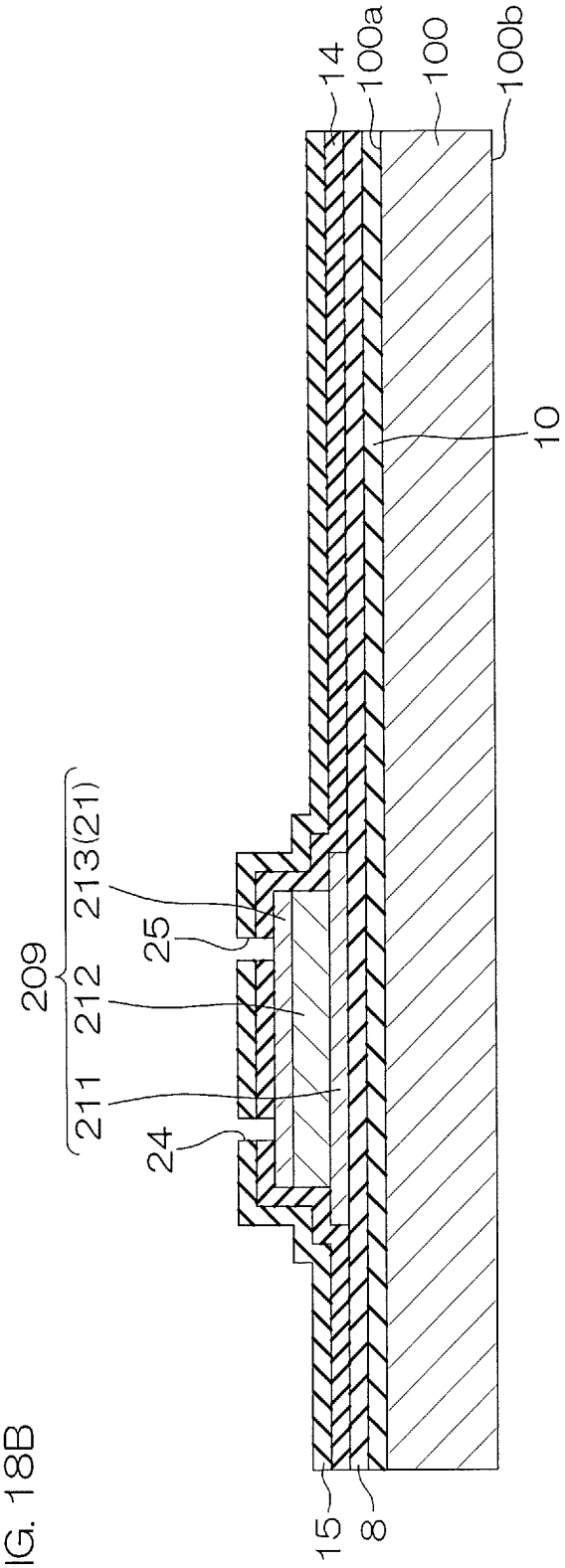

FIG. 18B

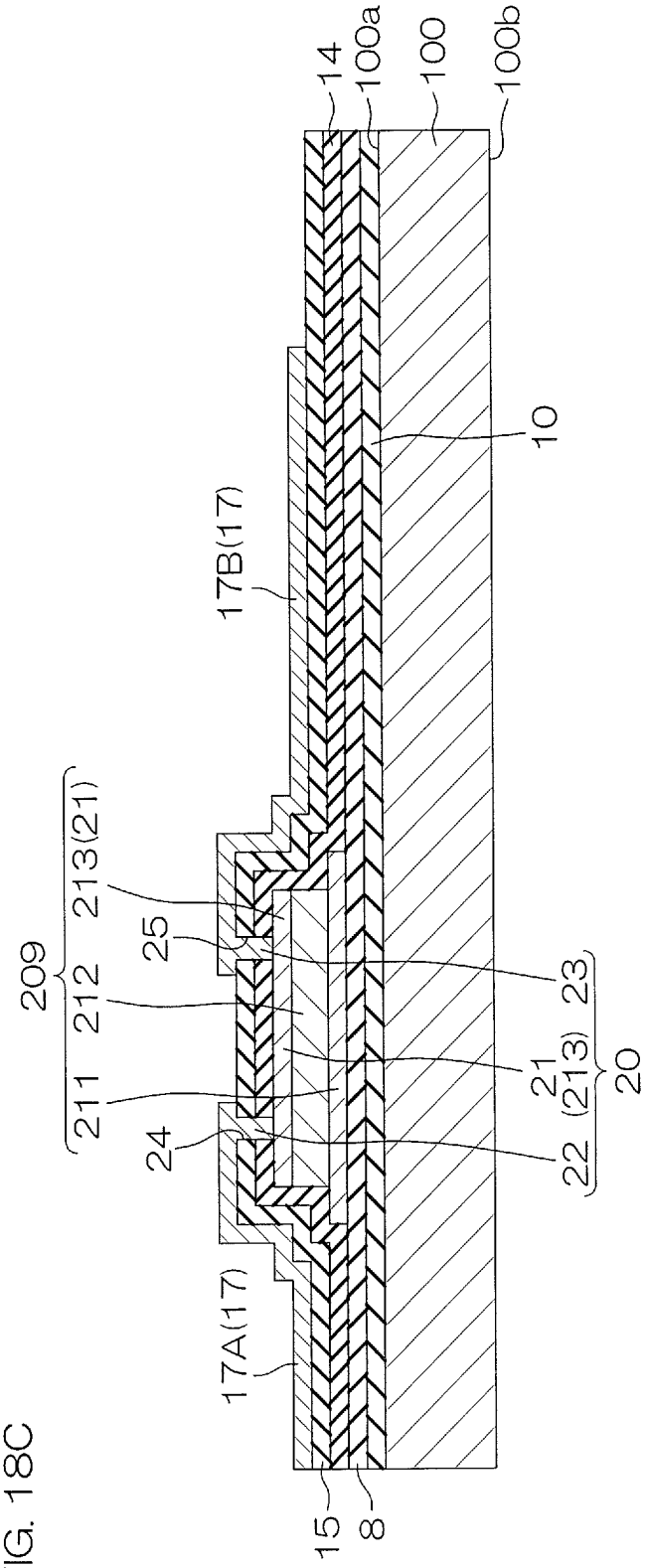
14
100a
100
100b
10
17B(17)
209
213(21)
212
211
25
24
23
21
(213)
20
22
17A(17)
15
8

FIG. 18C

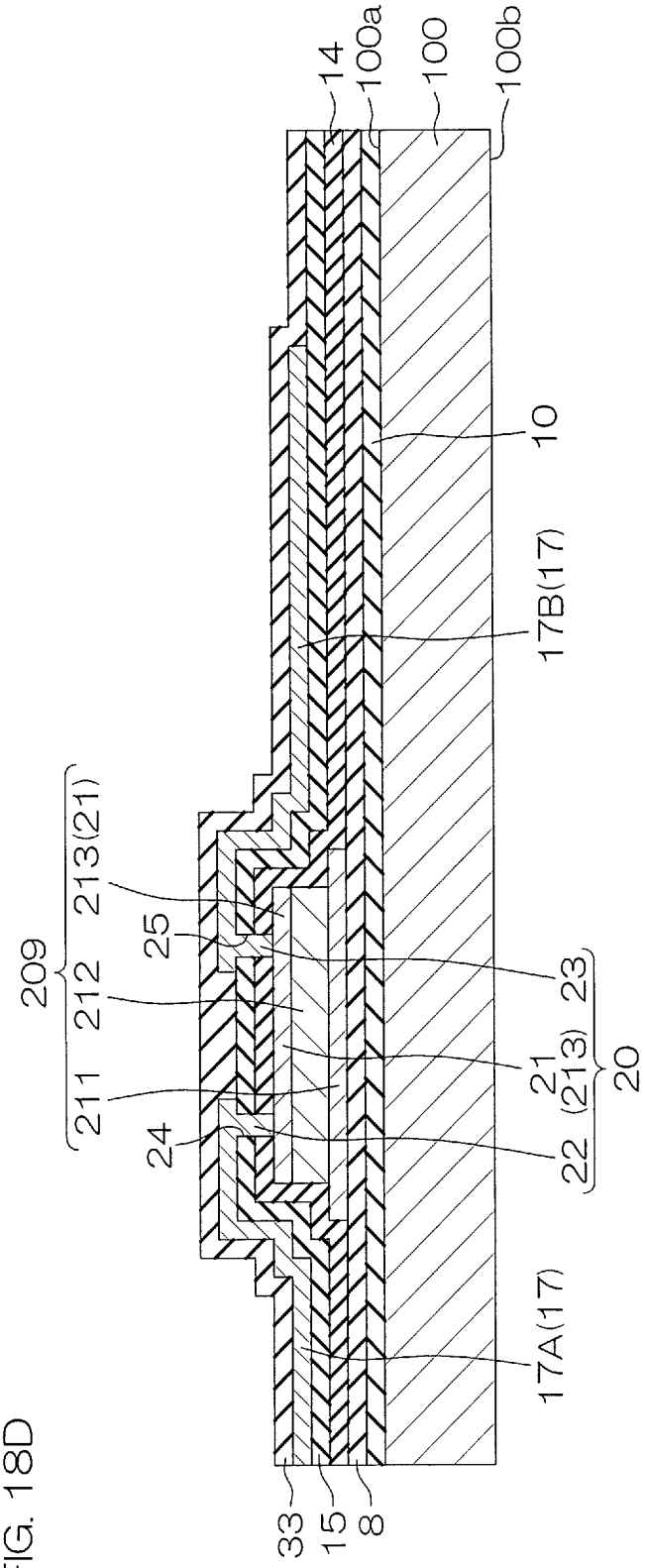
14
100a
100
100b
10
17B(17)
209
213(21)
212
211
25
24
23
21
(213)
22
20
17A(17)
33
15
8

FIG. 18D

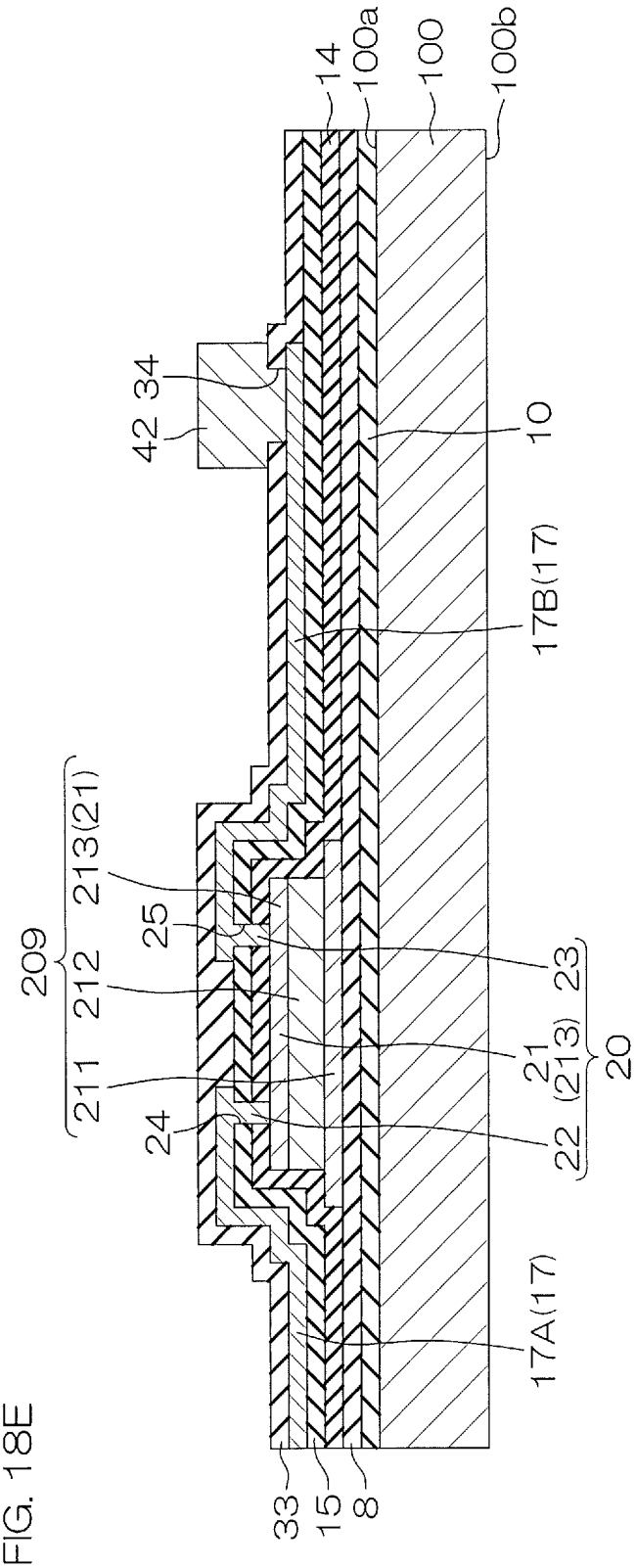
14
100a
100
100b
34
42
10
17B(17)
209
213(21)
25
212
211
24
23
21
(213)
20
22
17A(17)
33
15
8

FIG. 18E

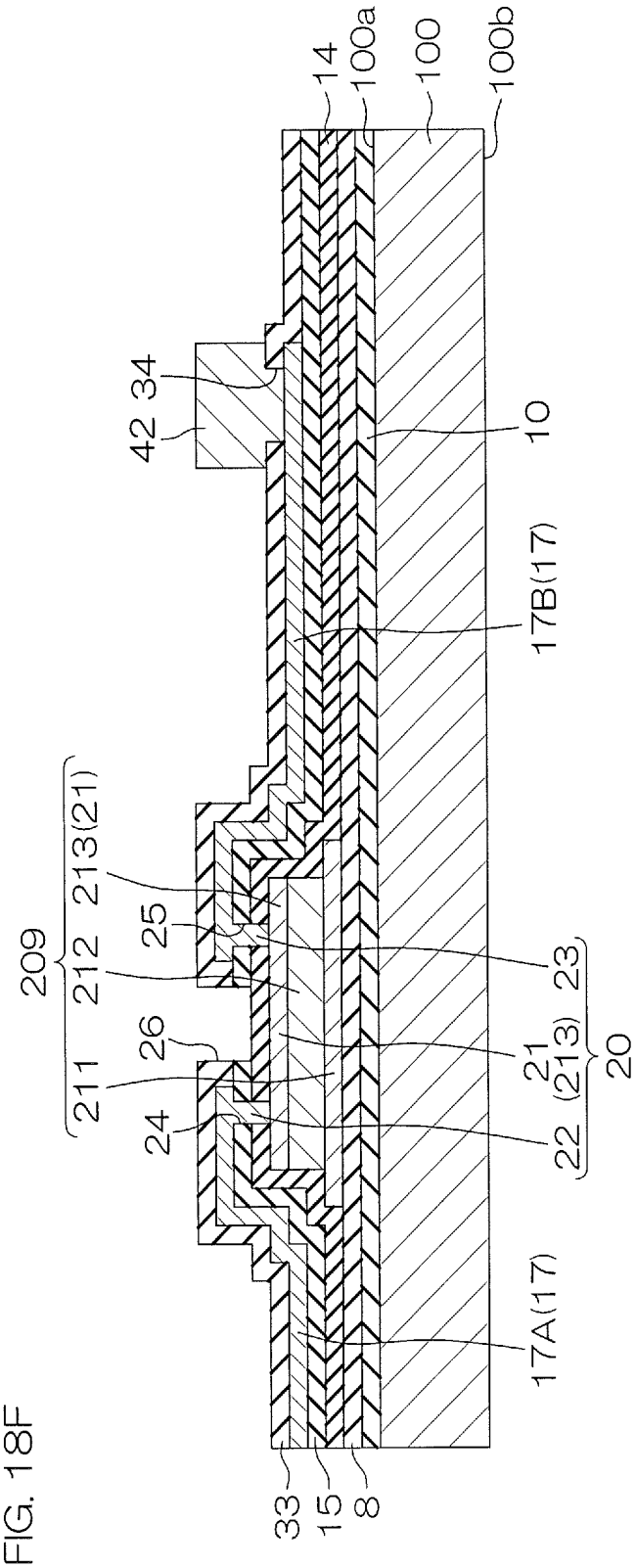
14
100a
100
100b
34
42
10
17B(17)
209
213(21)
212
211
25
26
24
23
21
(213)
22
20
17A(17)
33
15
8

FIG. 18F

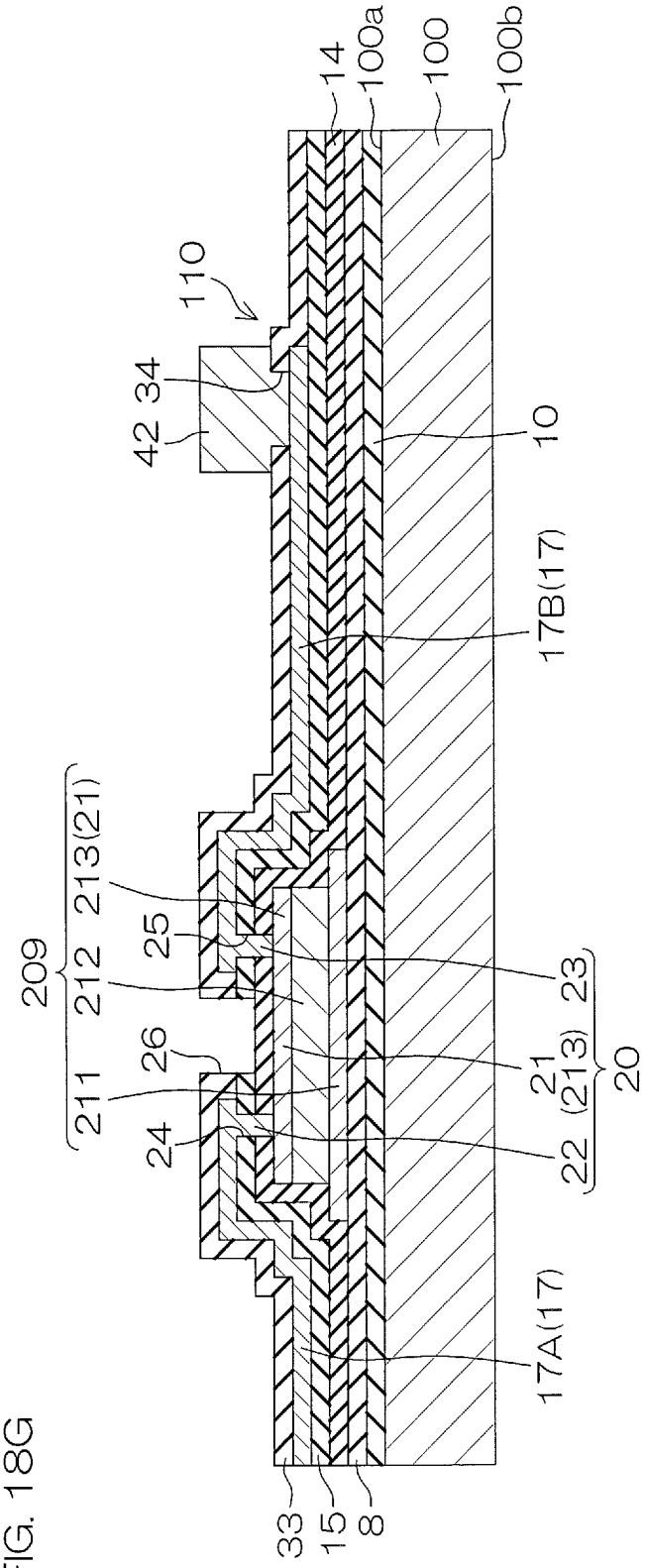
14
100a
100
100b
110
34
42
10
17B(17)
209
213(21)
212
211
25
26
24
23
21
(213)
20
22
17A(17)
33
15
8

FIG. 18G

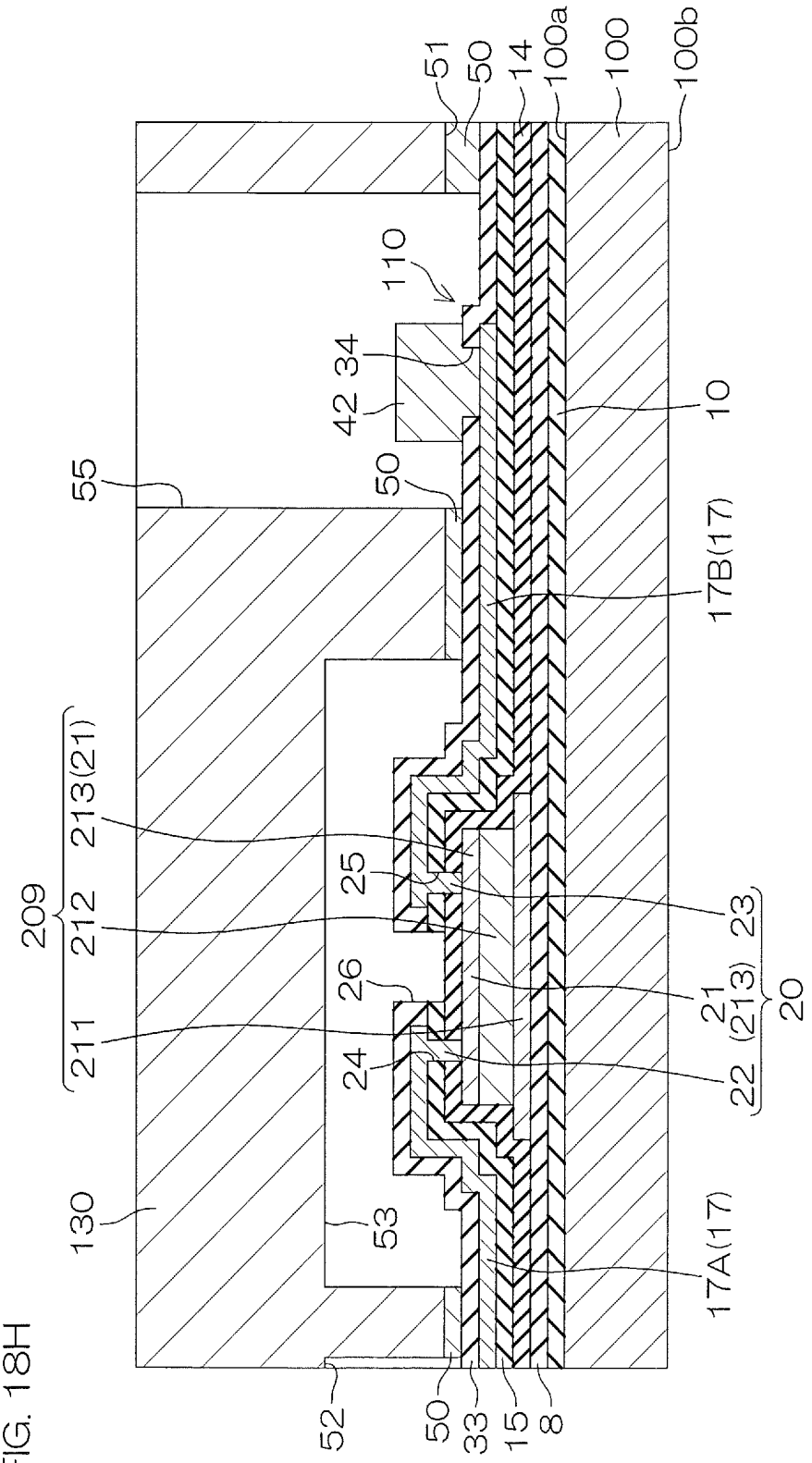
51
50
14
100a
100
100b
110
34
42
10
55
50
17B(17)
213(21)
209
212
211
25
23
26
21
(213)
20
24
22
130
53
17A(17)
52
50
33
15
8

FIG. 18H

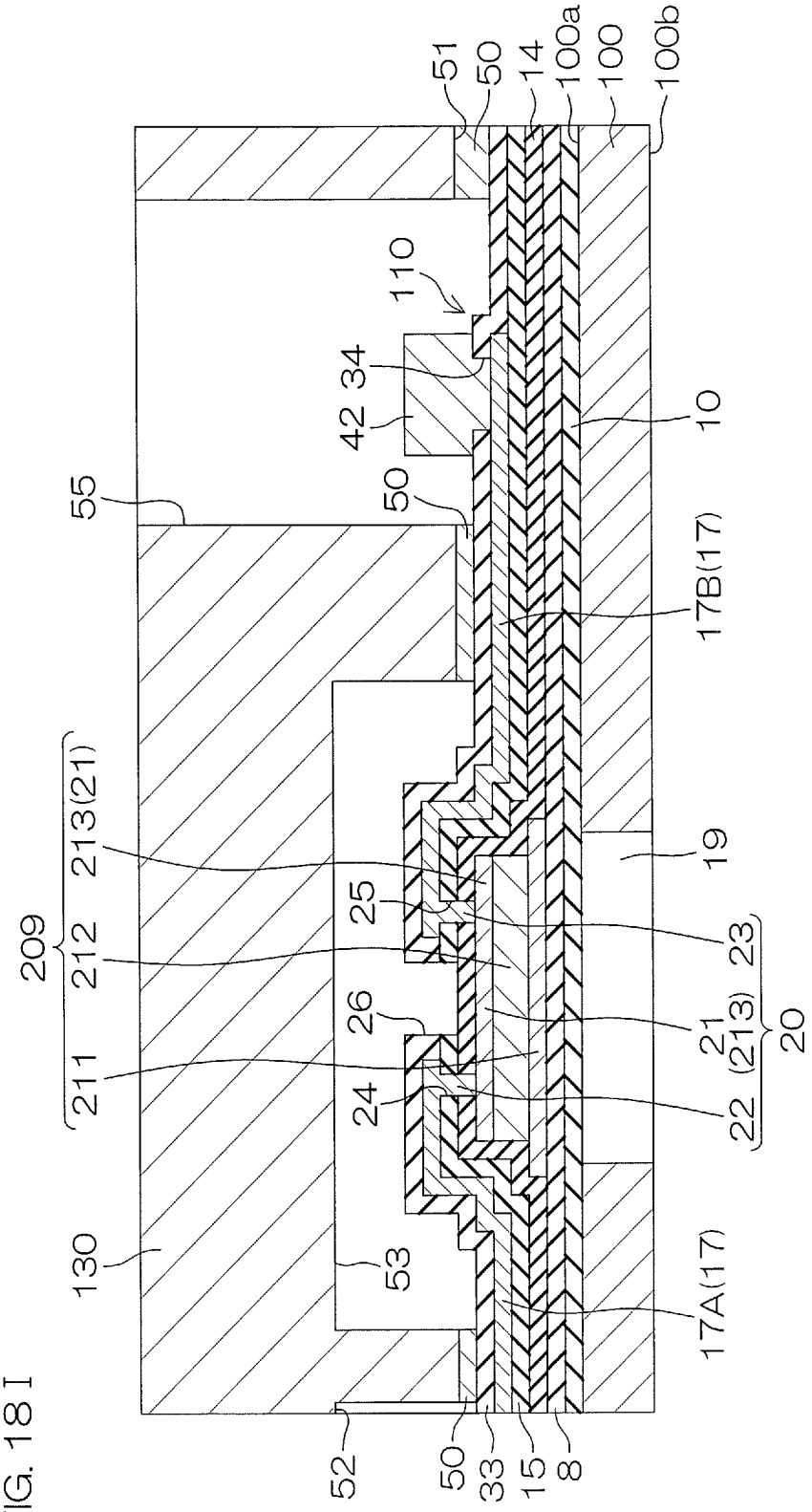
51
50
14
100a
100
100b
110
34
42
10
55
50
17B(17)
213(21)
19
209
212
25
23
26
21
(213)
20
211
24
22
130
53
17A(17)
52
50
33
15
8

FIG. 18 I

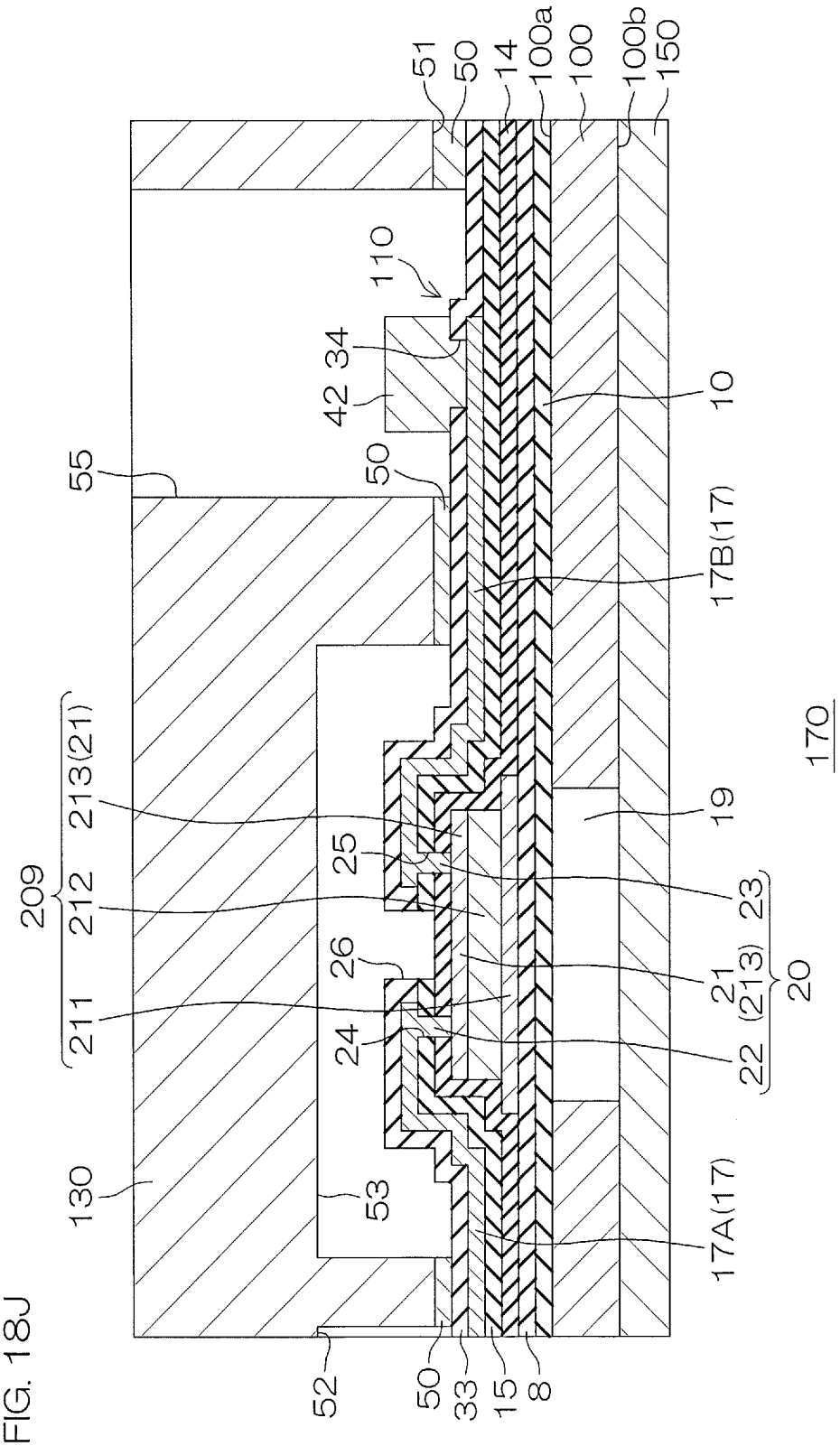
51
50
14
100a
100
100b
150
110
34
42
10
55
50
17B(17)
213(21)
209
212
211
25
26
24
23
21
(213)
20
22
19
170
130
53
17A(17)
52
50
33
15
8

FIG. 18J

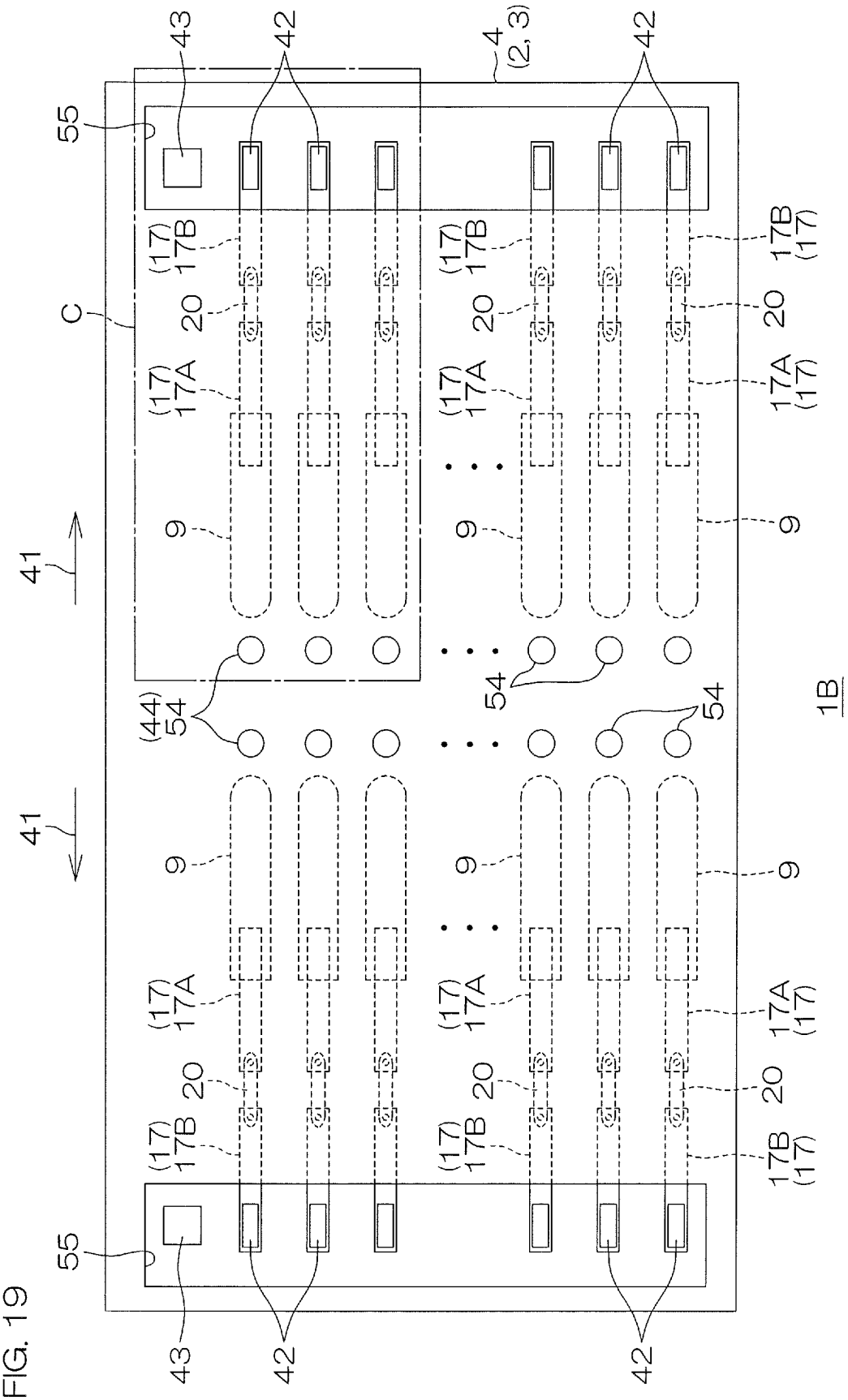
43
42
4
(2, 3)
42
55
C
(17)
17B
20
(17)
17A
9
41
(44)
54
54
54
1B
41
9
(17)
17A
20
(17)
17B
55
43
42
42
17B
(17)
20
17A
(17)
9

FIG. 19

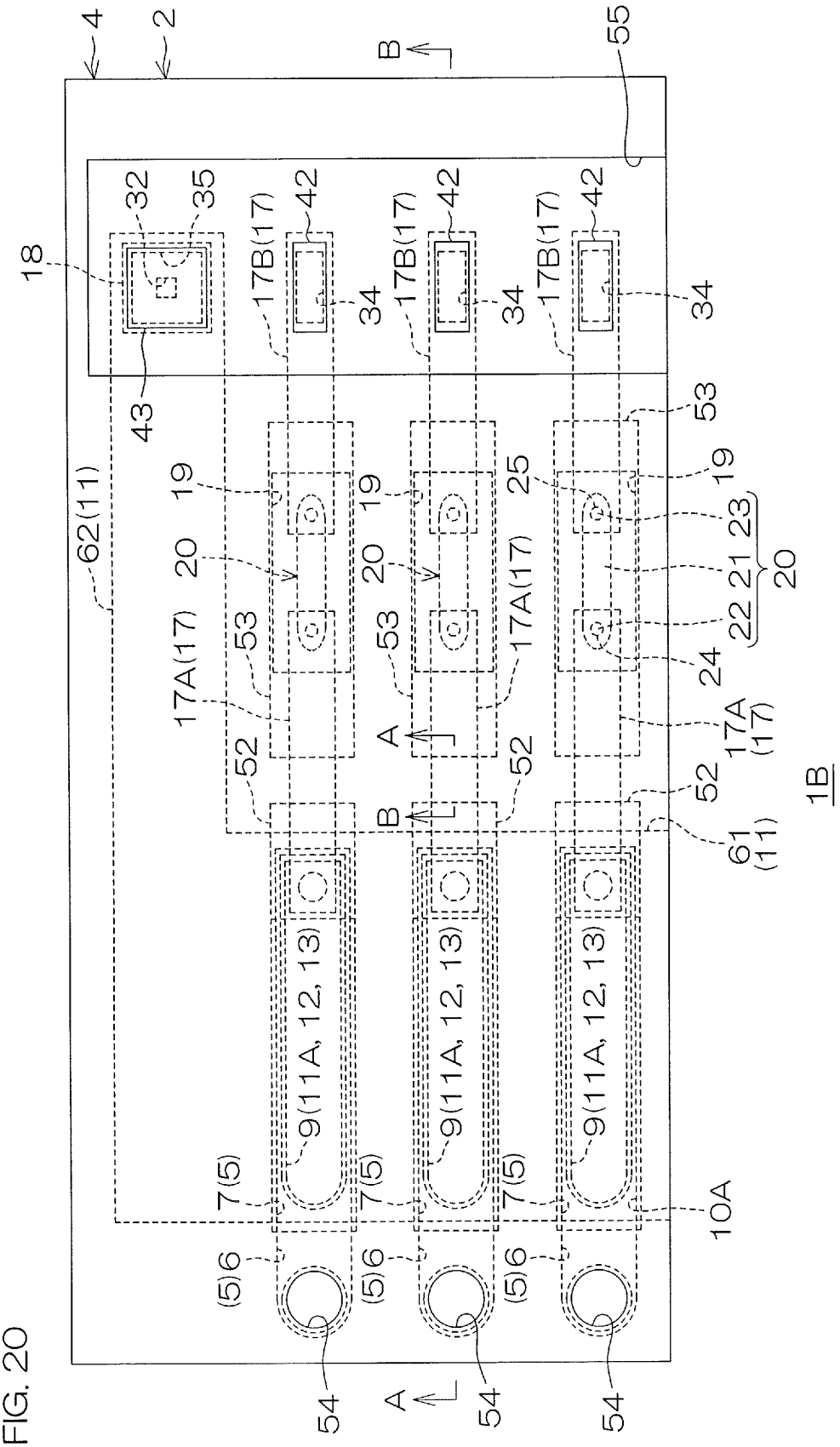
4
2
B
55
18
32
35
42
17B(17)
34
43
53
19
25
23
20
21
22
24
62(11)
17A(17)
52
A
61
(11)
1B
9(11A, 12, 13)
7(5)
10A
(5)6
54

FIG. 20

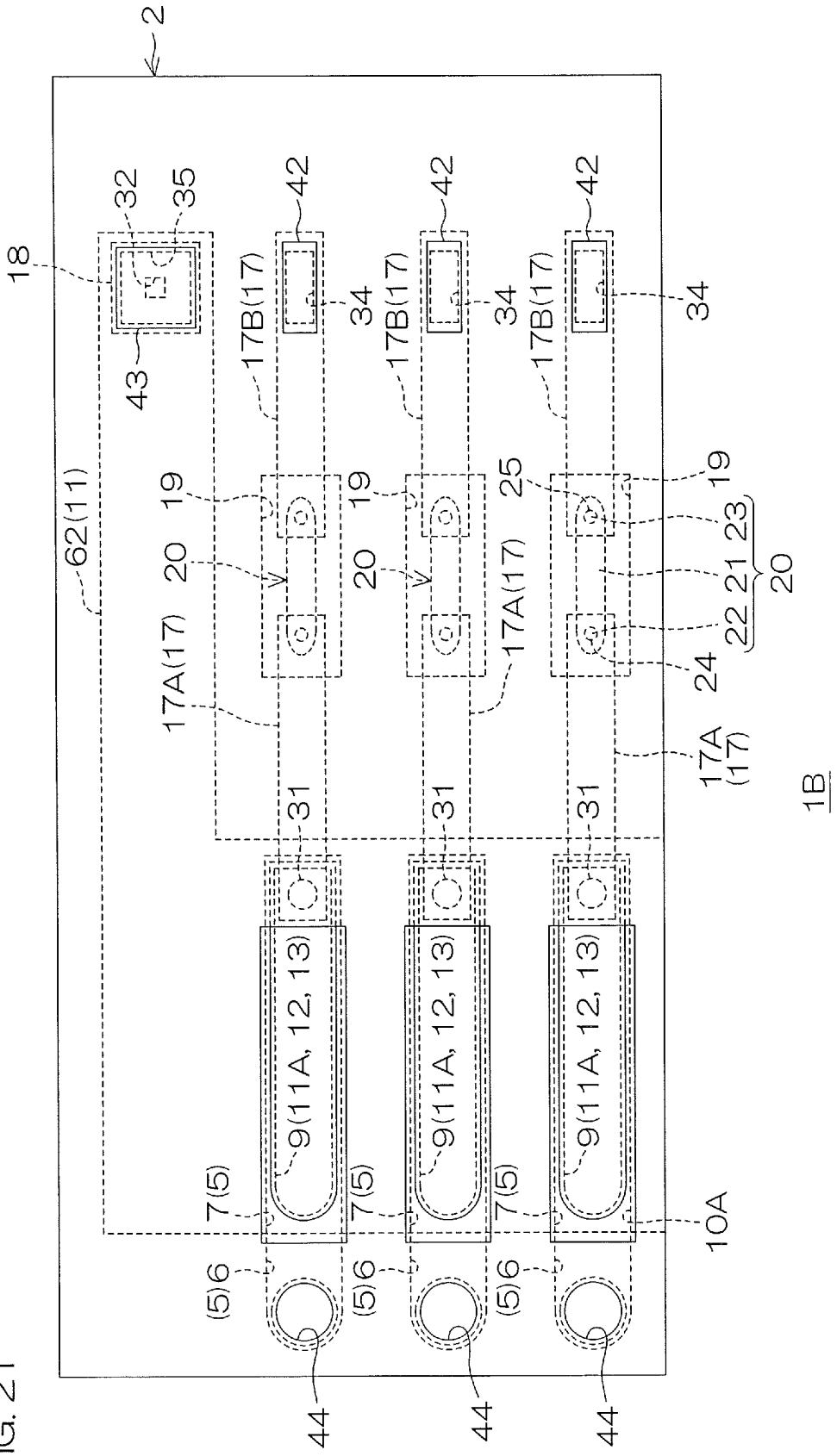
2
18
32
35
43
42
42
42
34
34
34
17B(17)
17B(17)
17B(17)
62(11)
19
19
25
19
20
20
23
21
20
22
24
17A(17)
17A(17)
17A(17)
17A (17)
31
31
31
9(11A, 12, 13)
9(11A, 12, 13)
9(11A, 12, 13)
7(5)
7(5)
7(5)
10A
(5)6
(5)6
(5)6
44
44
44
1B

FIG. 21

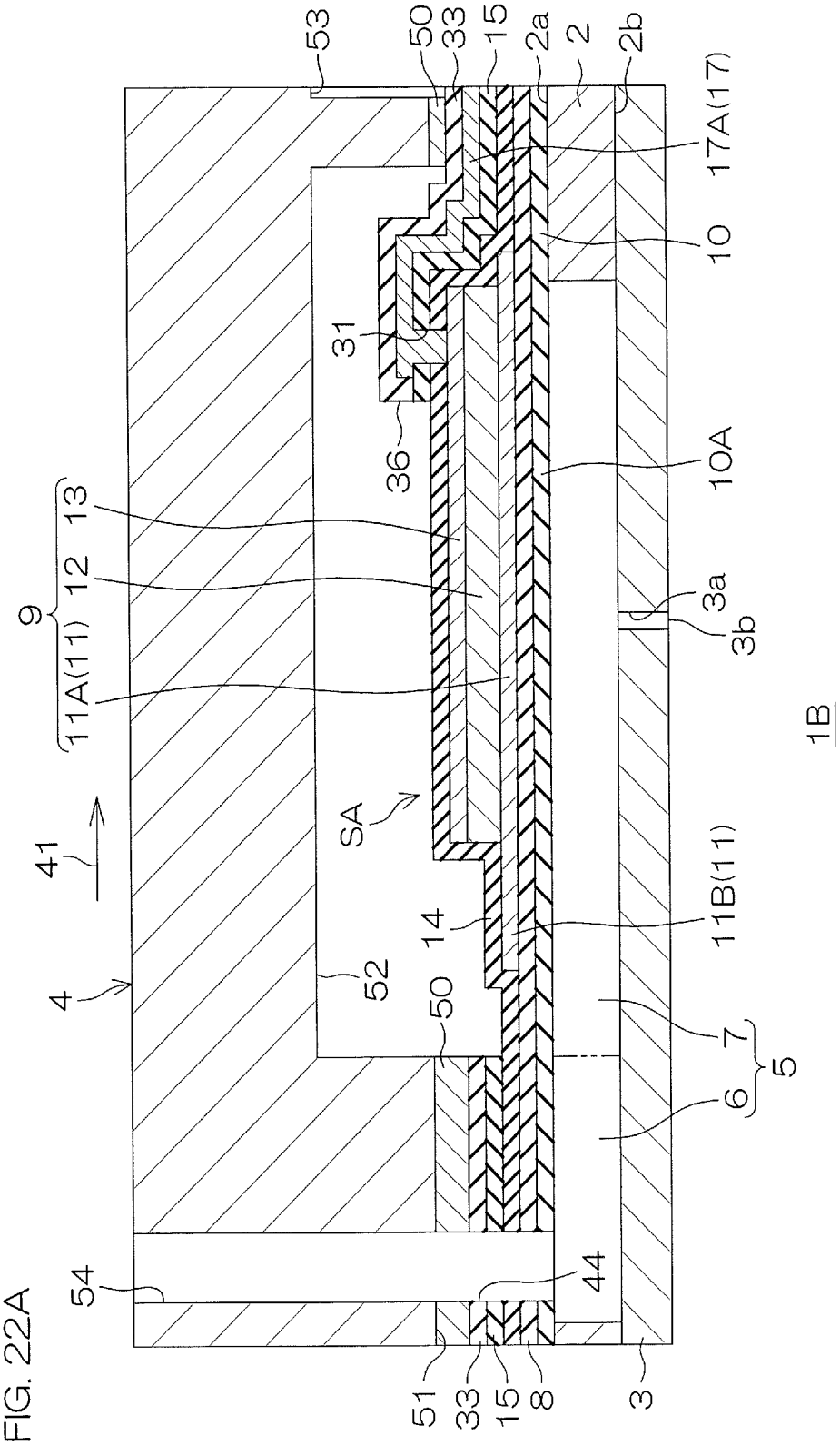
53
50
33
15
2a
2
2b
17A(17)
10
31
36
10A
13
12
9
11A(11)
3a
3b
1B
41
SA
11B(11)
14
4
52
50
7
5
6
54
44
51
33
15
8
3

FIG. 22A

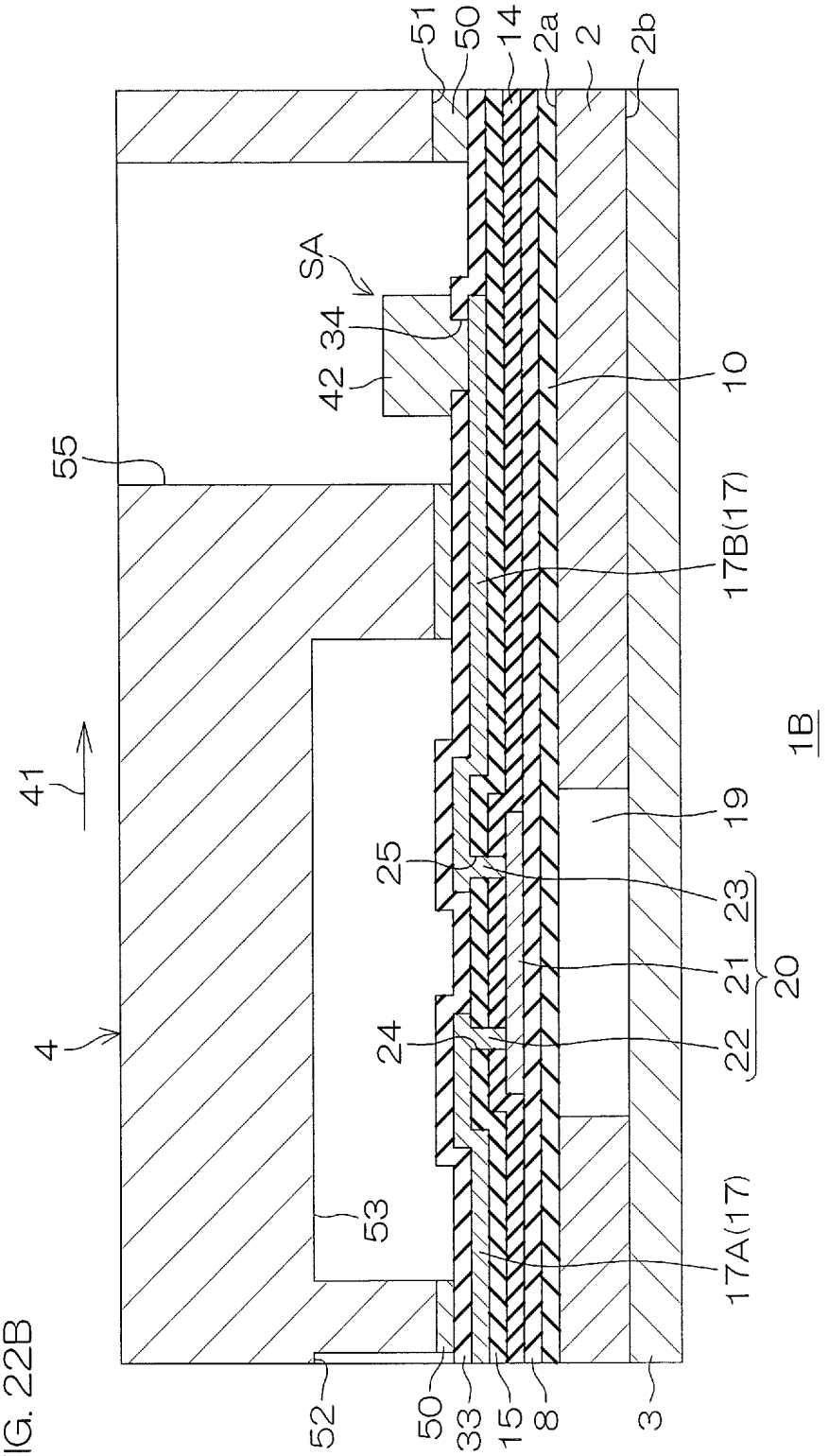
51
50
14
2a
2
2b
SA
34
42
10
55
17B(17)
41
1B
19
25
23
21
20
4
24
22
53
17A(17)
52
50
33
15
8
3

FIG. 22B

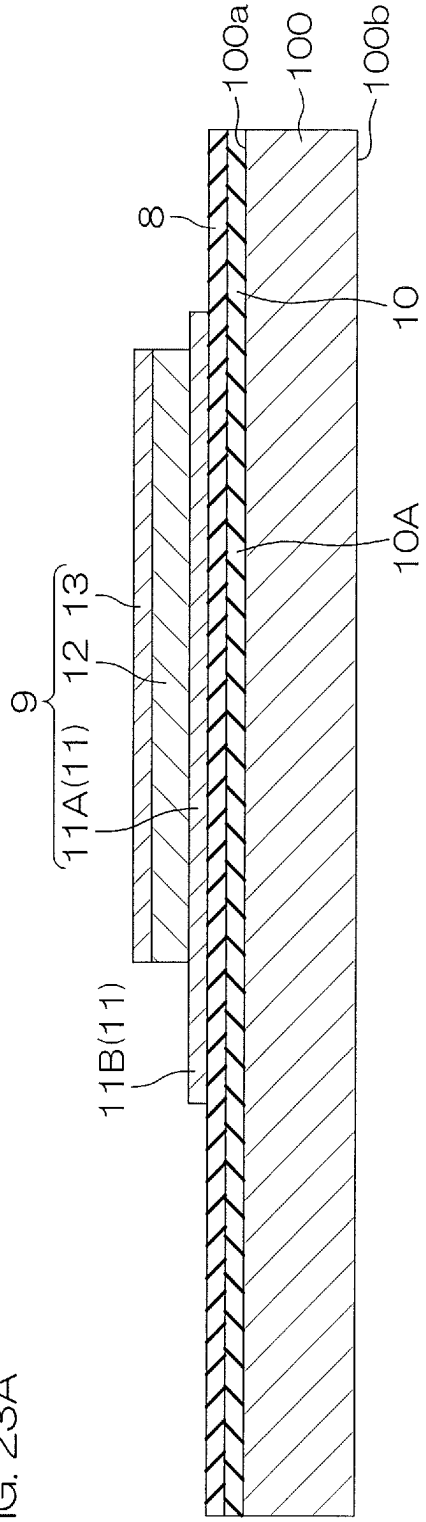

FIG. 23A

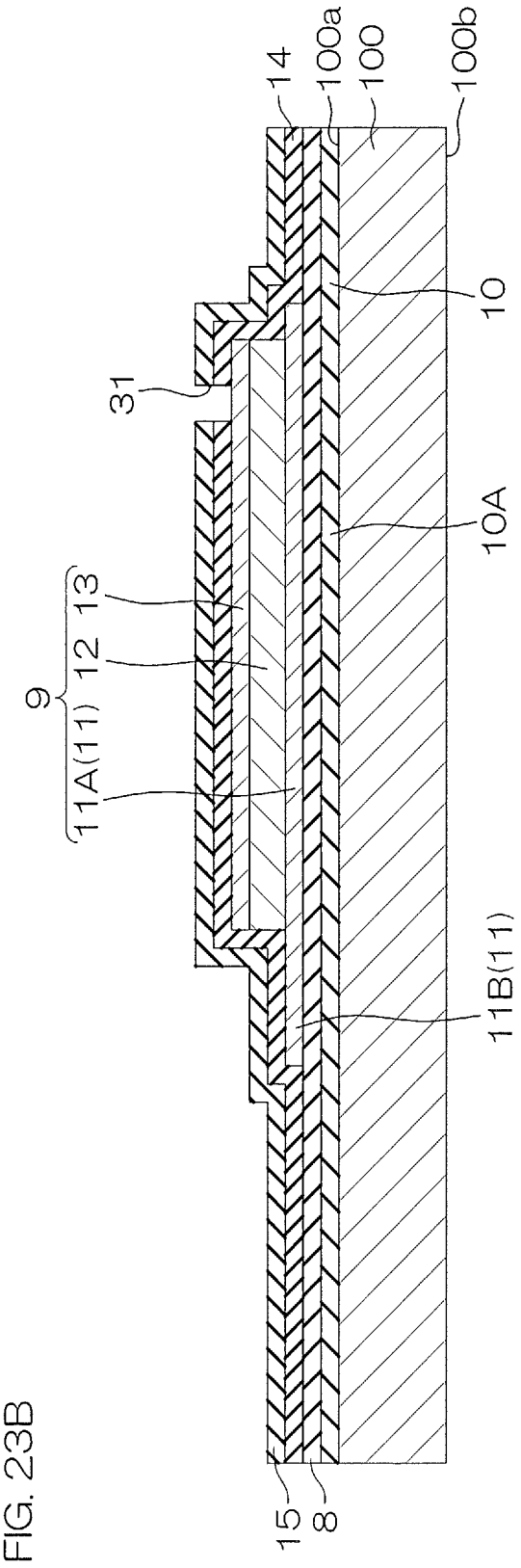

FIG. 23B

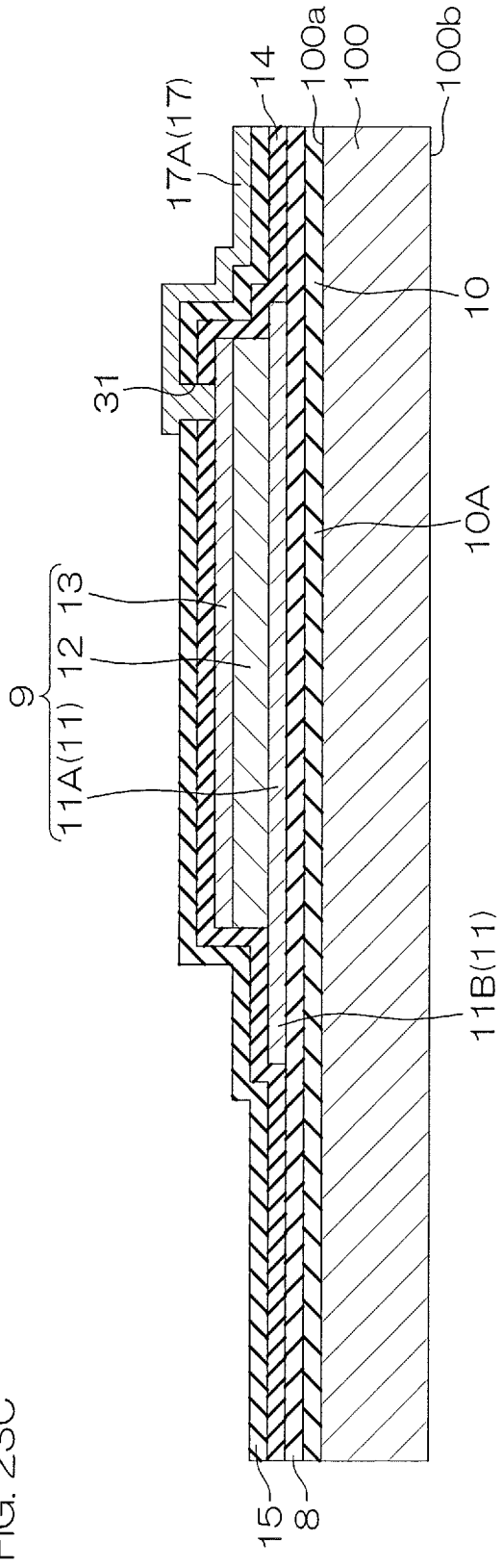

FIG. 23C

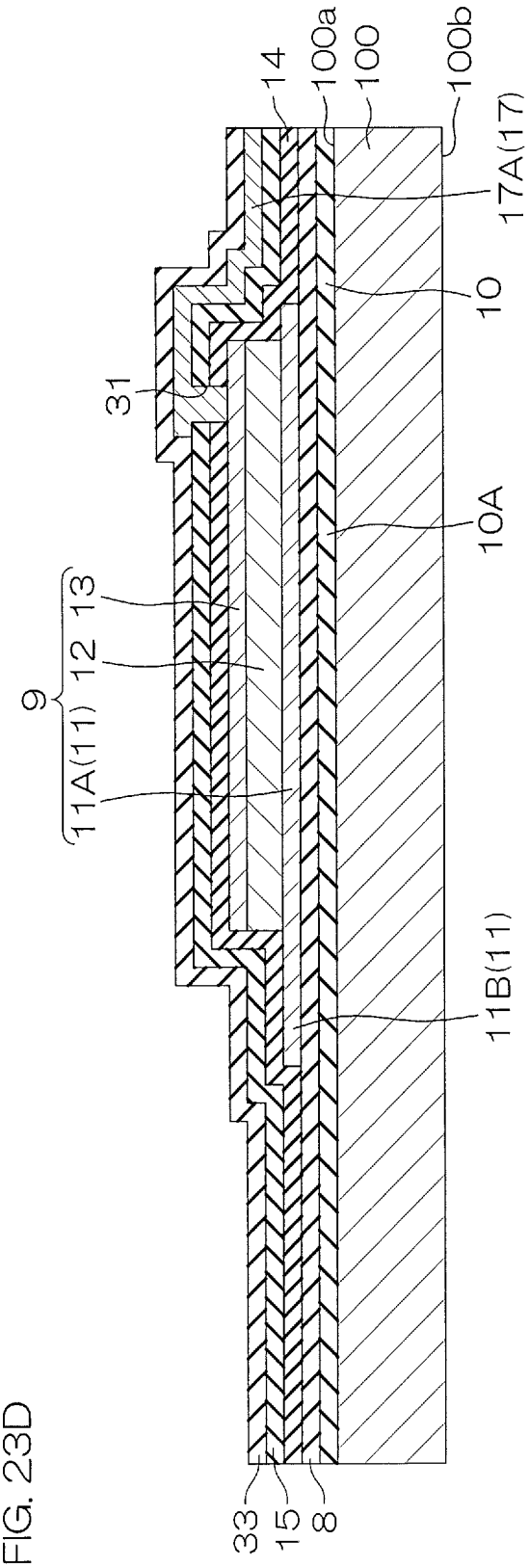

FIG. 23D

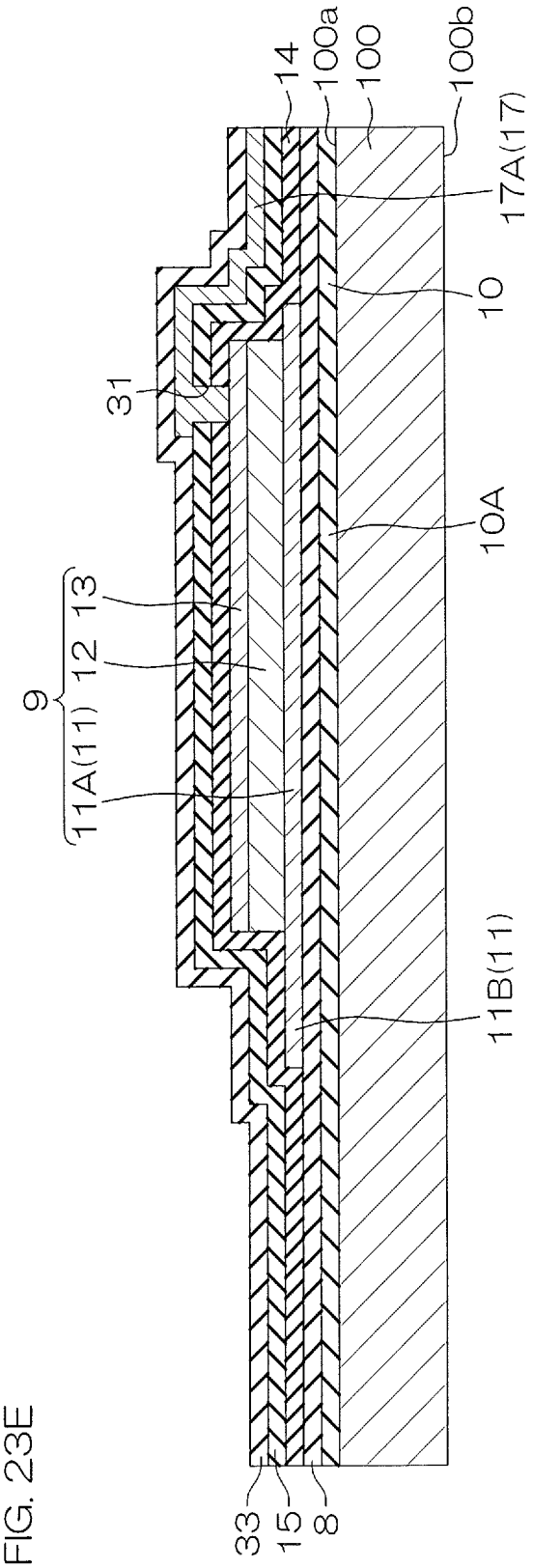

FIG. 23E

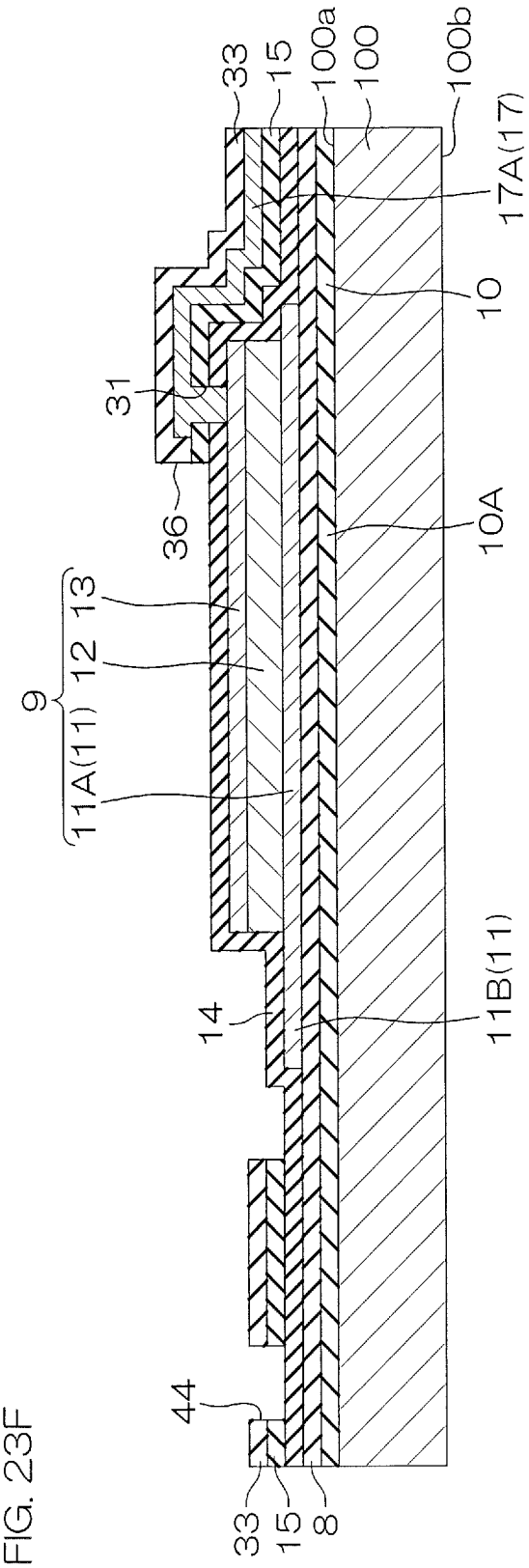
33
15
100a
100
100b
17A(17)
10
31
36
10A
9
11A(11)
12
13
14
11B(11)
44
33
15
8

FIG. 23F

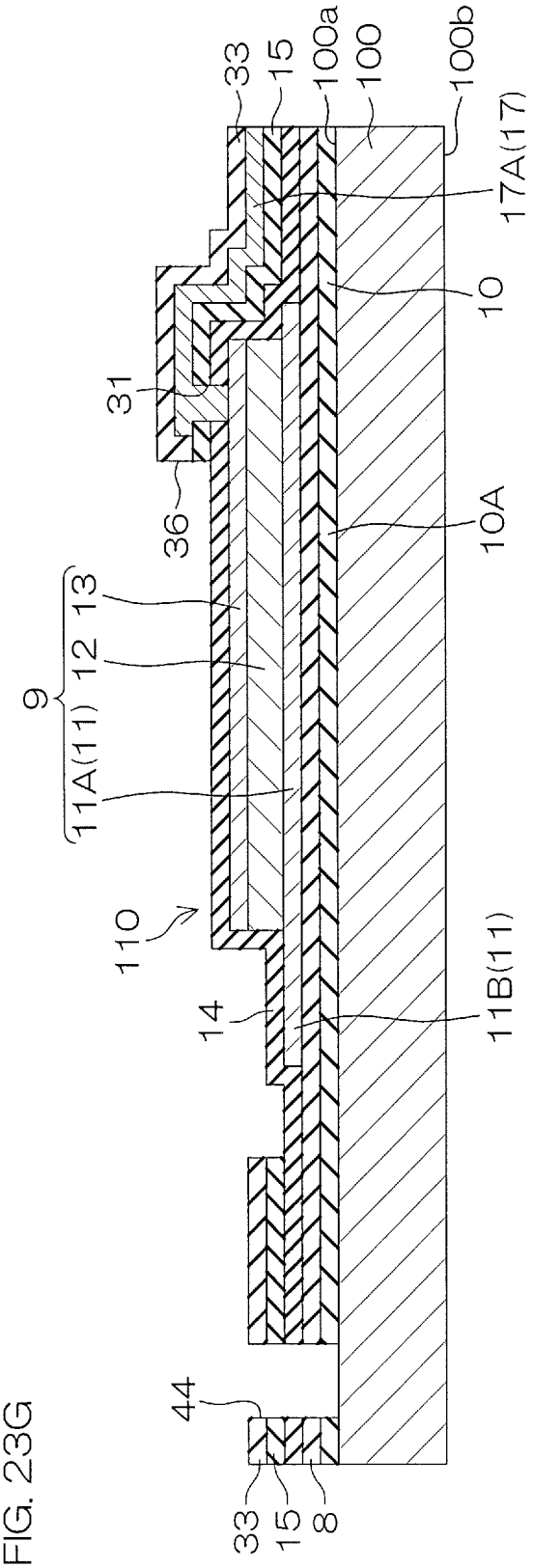
33
15
100a
100
100b
17A(17)
10
31
36
10A
9
11A(11)
12
13
110
14
11B(11)
44
33
15
8

FIG. 23G

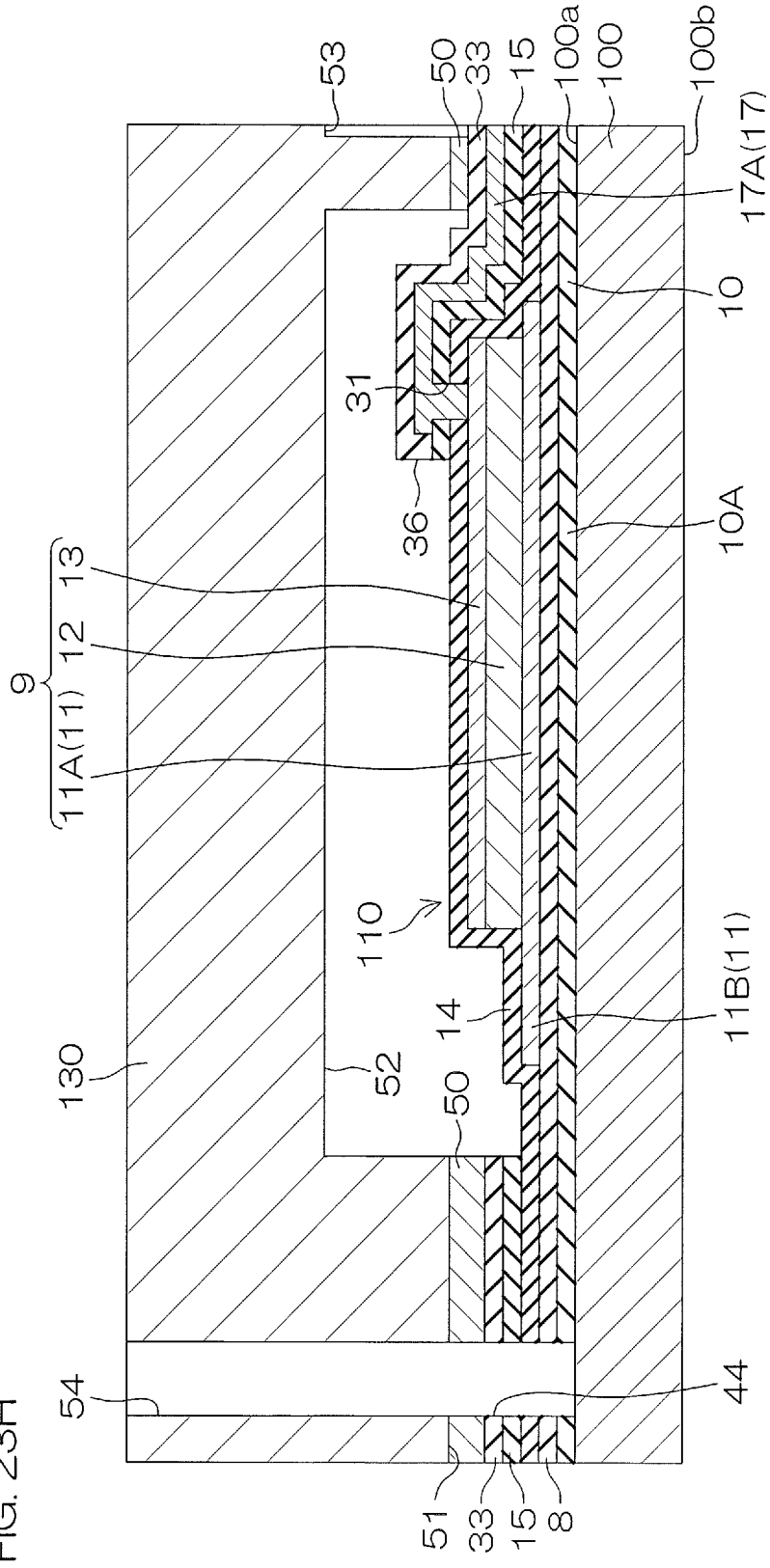
53
50
33
15
100a
100
100b
17A(17)
10
31
36
10A
13
12
9
11A(11)
110
11B(11)
14
130
52
50
54
44
51
33
15
8

FIG. 23H

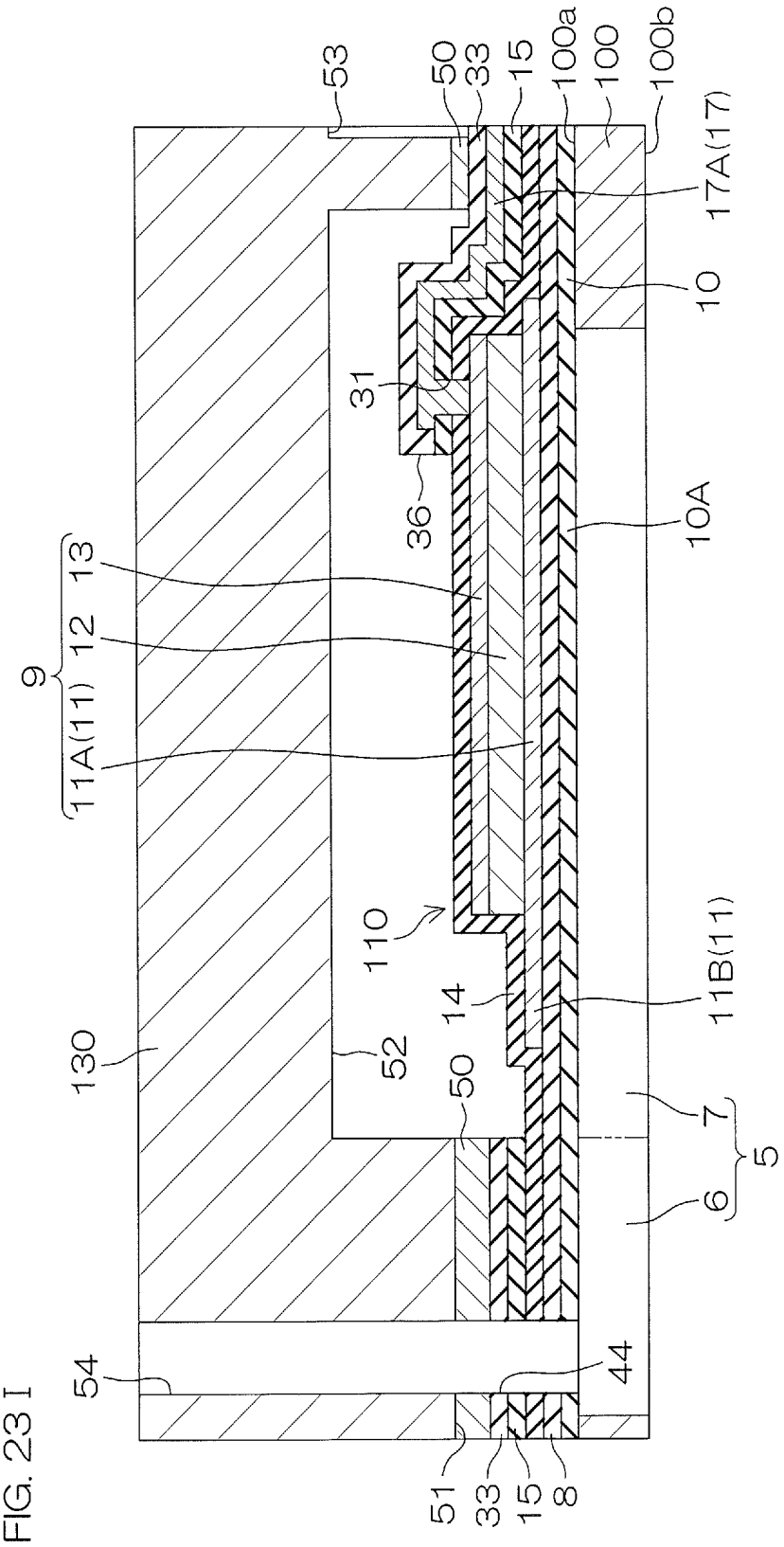
53
50
33
15
100a
100
100b
17A(17)
10
31
36
10A
13
12
9
11A(11)
110
14
11B(11)
130
52
50
7
5
6
54
44
51
33
15
8

FIG. 23 I

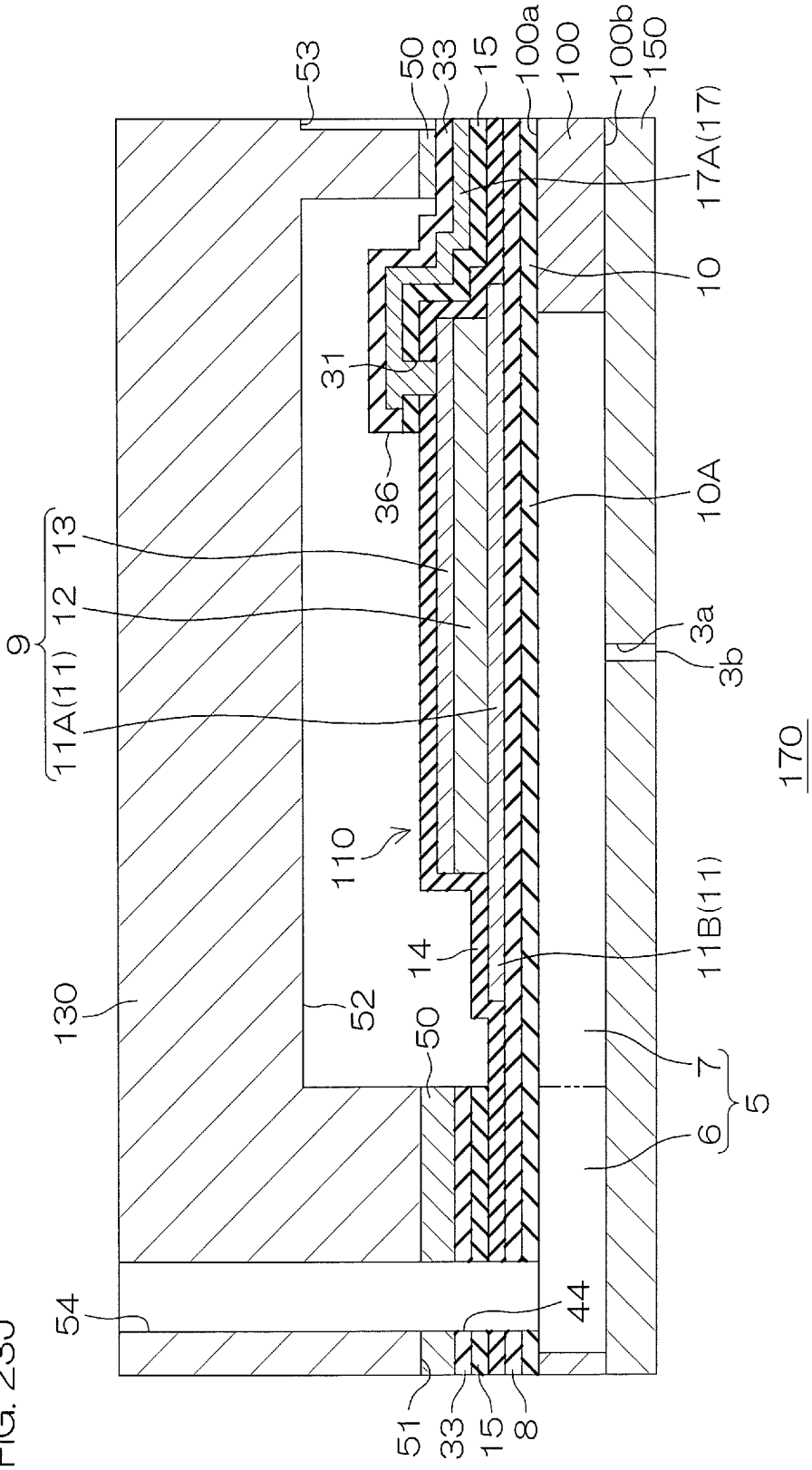
53
50
33
15
100a
100
100b
150
17A(17)
10
31
36
10A
13
12
9
11A(11)
3a
3b
170
110
11B(11)
14
130
52
50
7
5
6
54
44
51
33
15
8

FIG. 23J

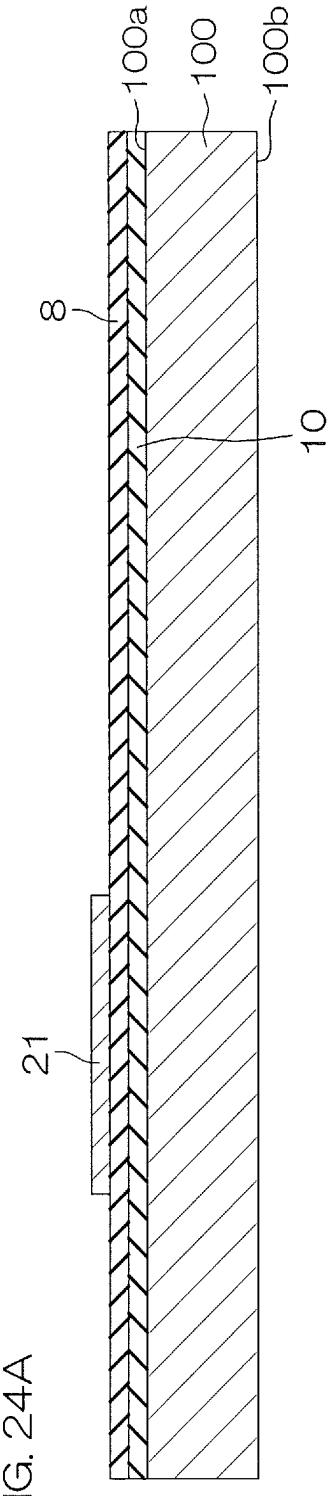

FIG. 24A

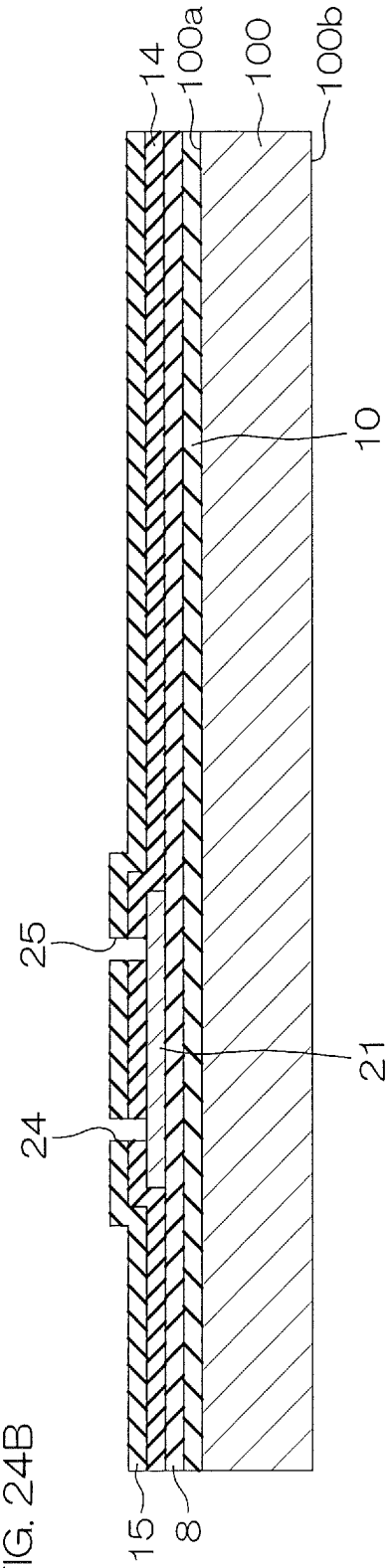

FIG. 24B

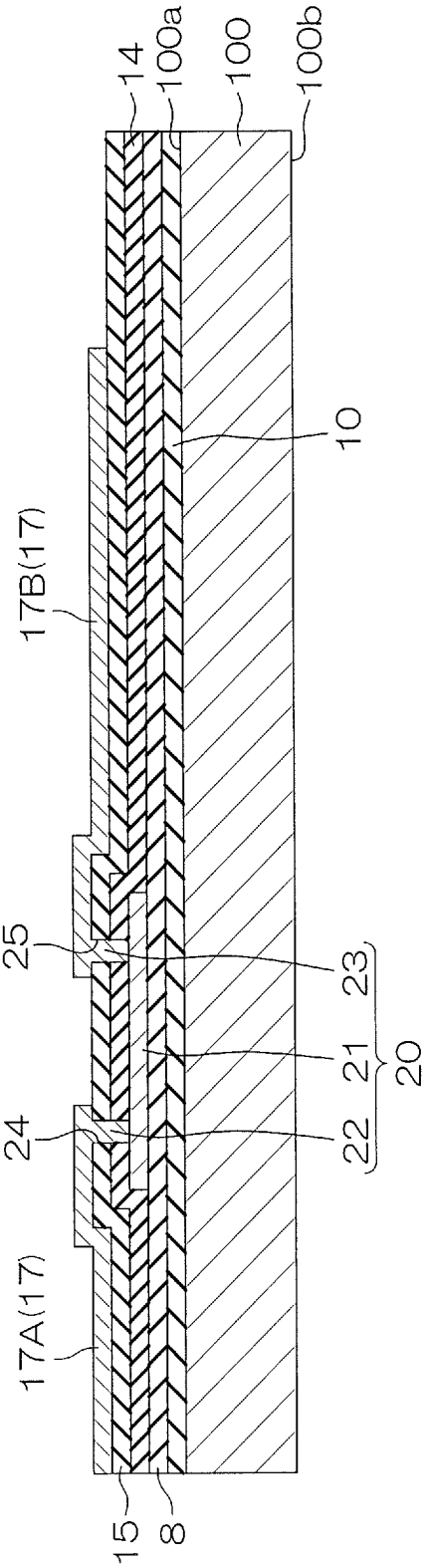

FIG. 24C

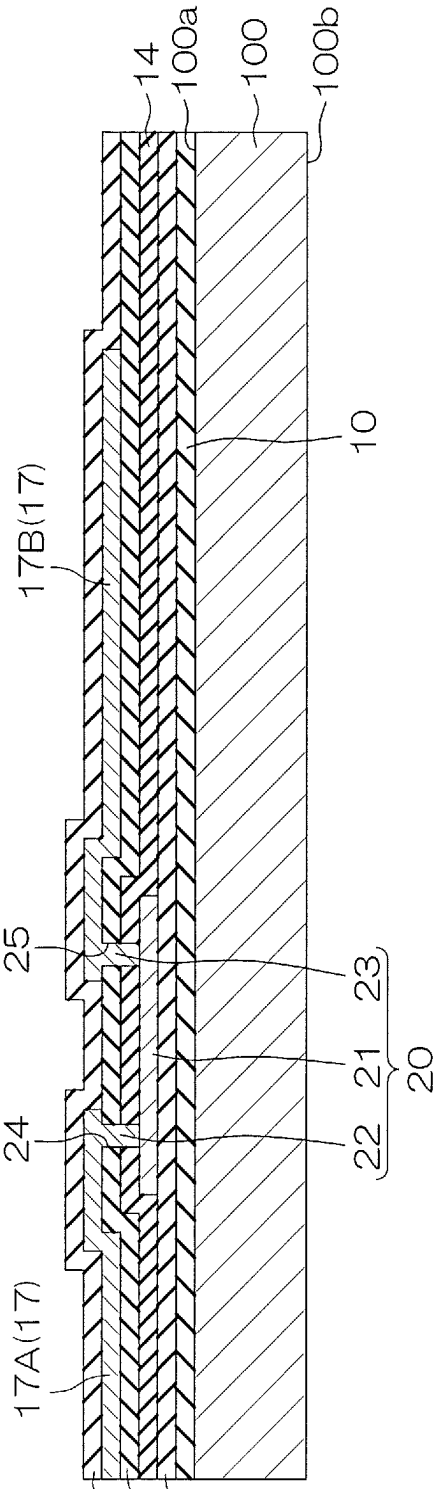

FIG. 24D

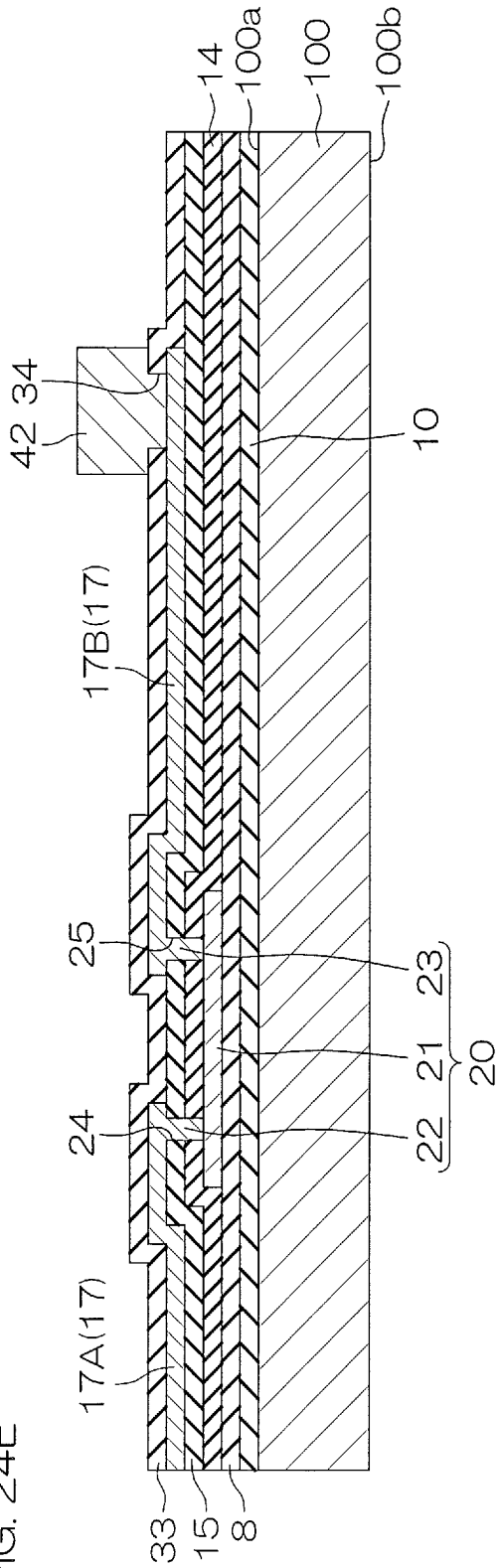

FIG. 24E

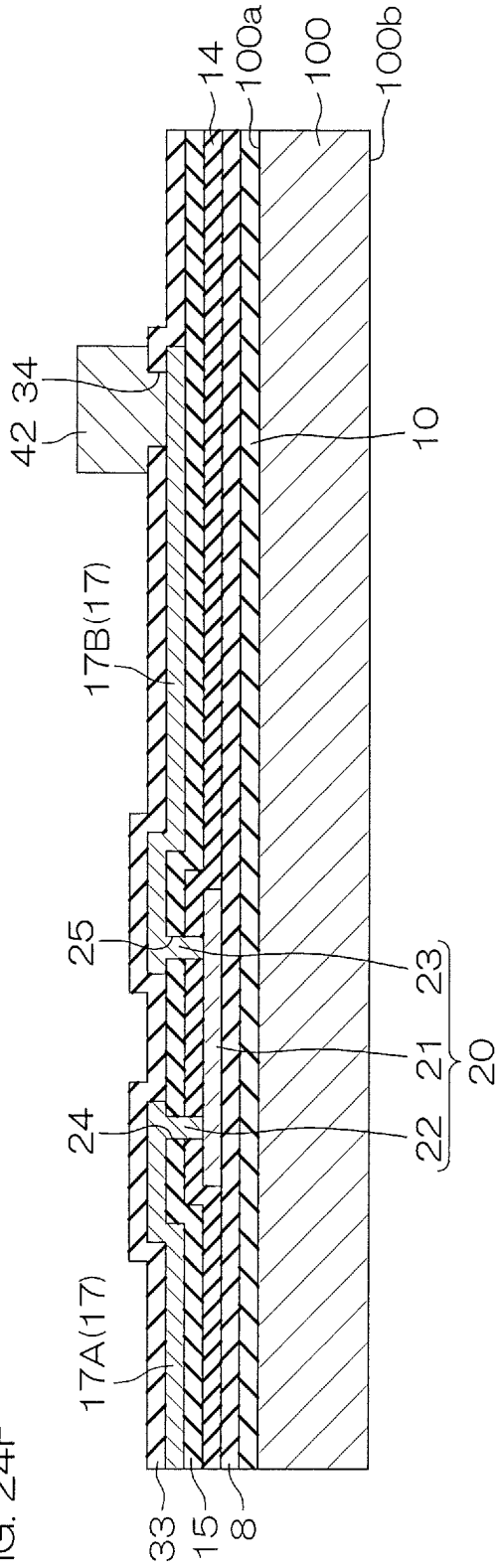

FIG. 24F

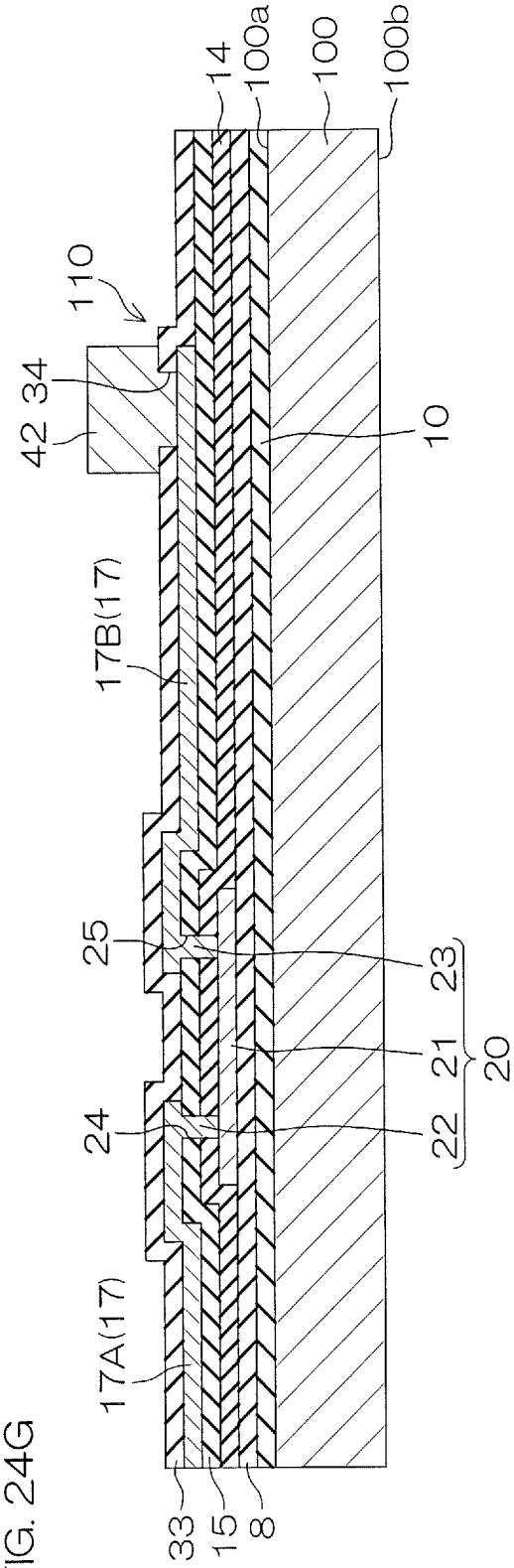

FIG. 24G

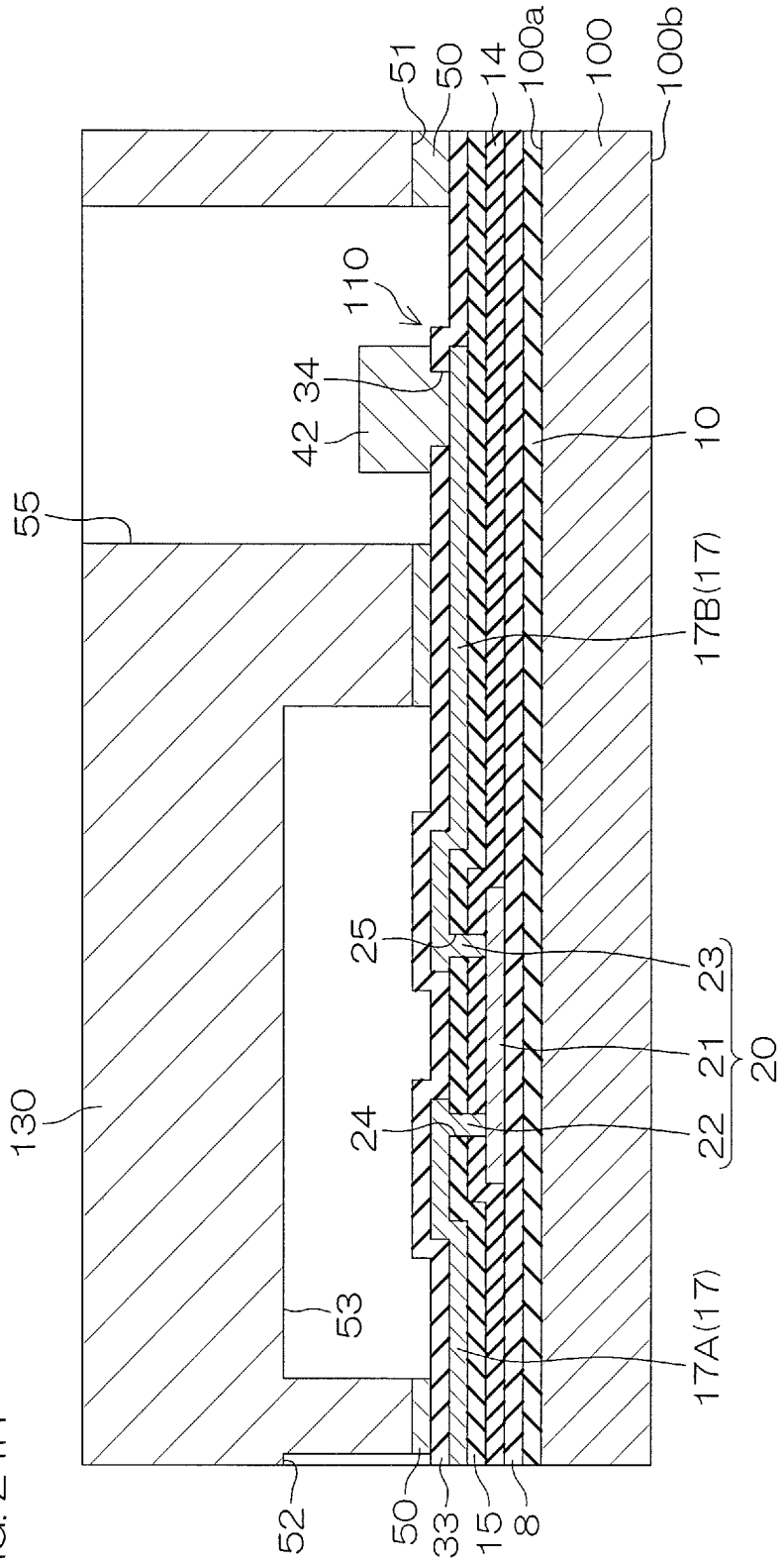
51
50
14
100a
100
100b
110
34
42
10
55
17B(17)
25
23
21
20
130
24
22
53
17A(17)
52
50
33
15
8

FIG. 24H

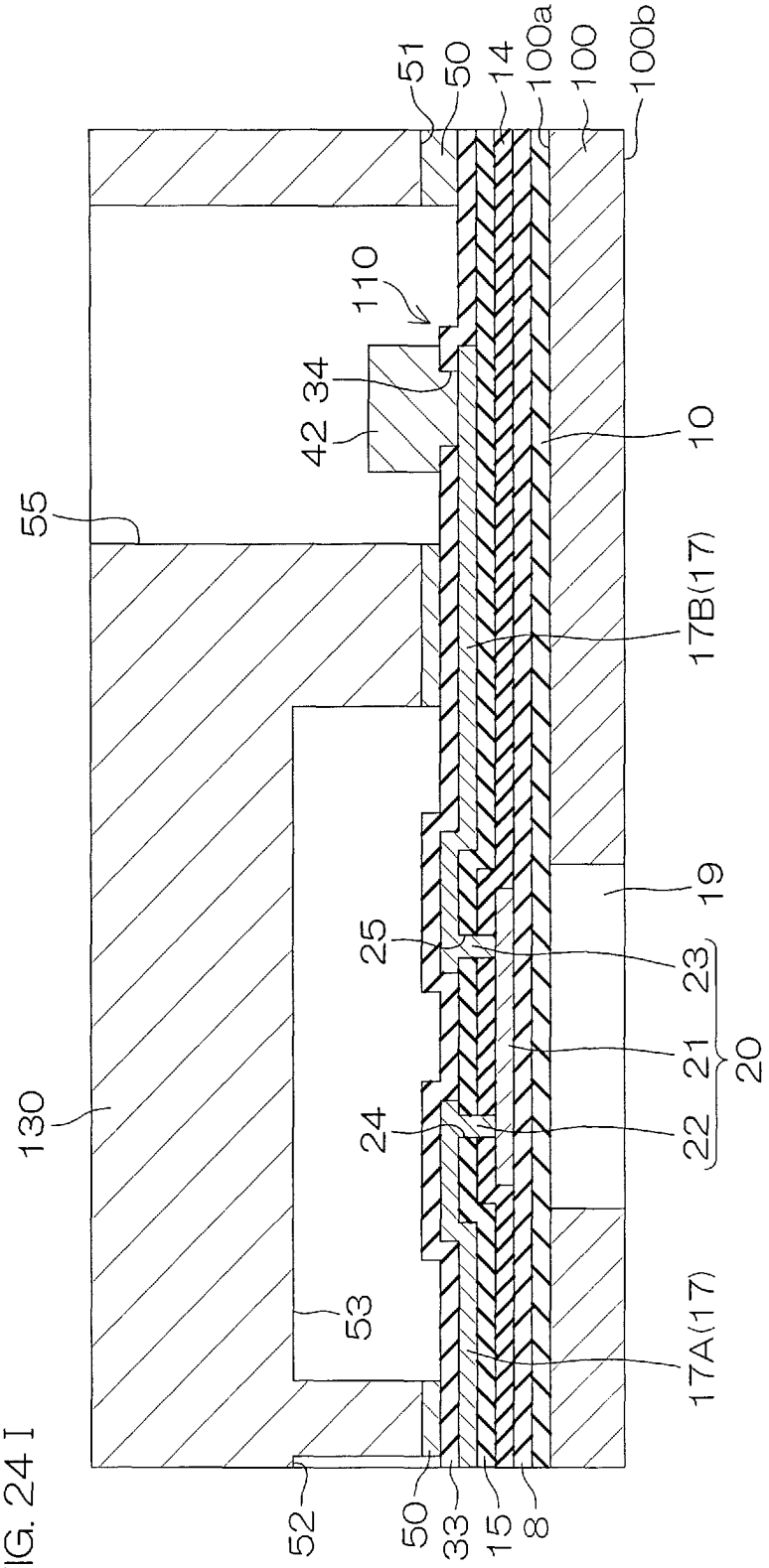
51
50
14
100a
100
100b
110
34
42
10
55
17B(17)
19
25
23
21
20
130
24
22
53
17A(17)
52
50
33
15
8

FIG. 24 I

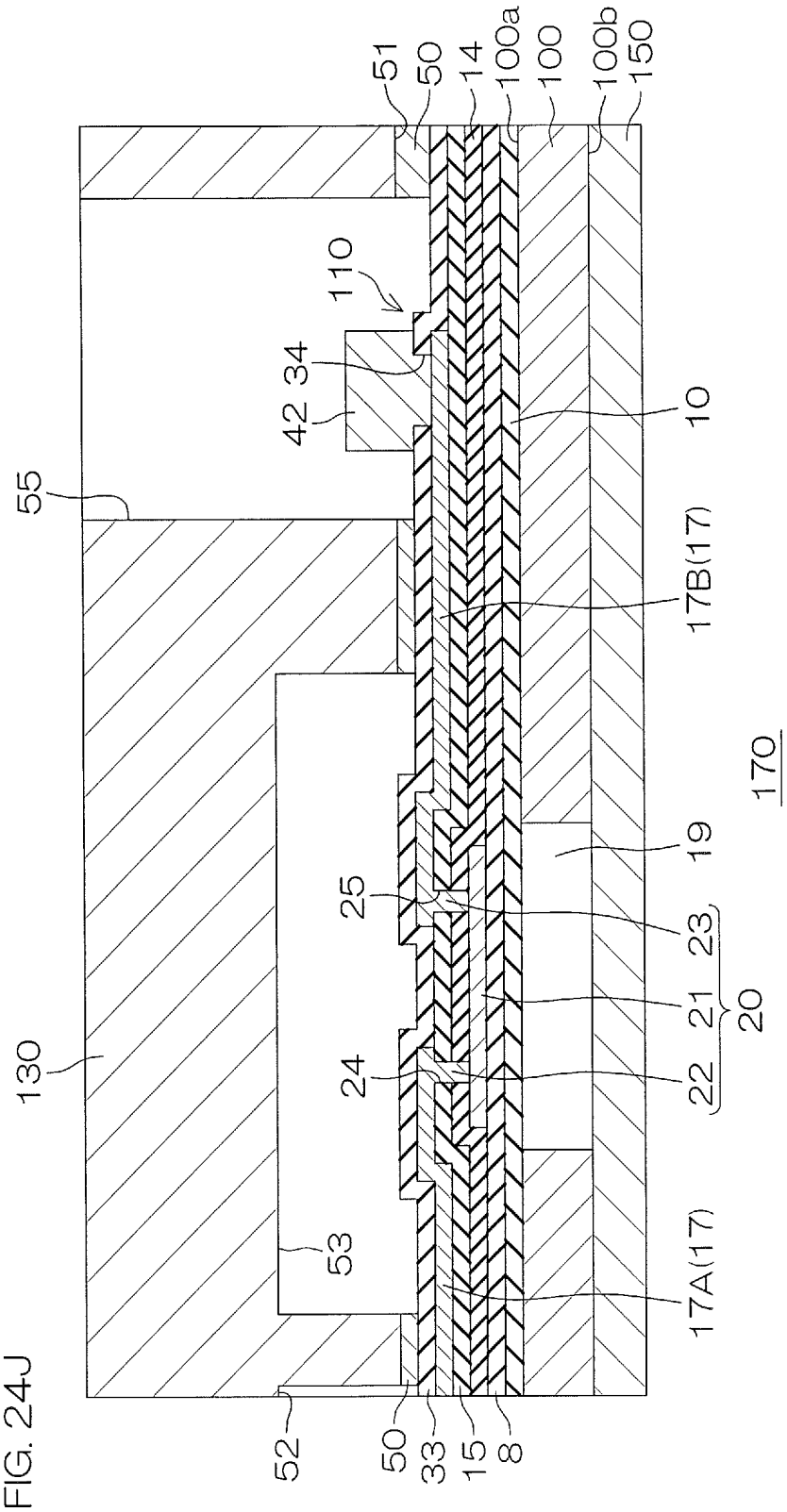
51
50
14
100a
100
100b
150
110
34
42
10
55
17B(17)
170
19
25
23
21
20
130
24
22
53
17A(17)
52
50
33
15
8

FIG. 24J

INKJET PRINT HEAD

TECHNICAL FIELD

The present disclosure relates to an inkjet print head.

BACKGROUND ART

Patent Literature 1 discloses an inkjet print head. The inkjet print head of Patent Literature 1 includes an actuator substrate having a pressure chamber as an ink flow passage, a movable film formed on the actuator substrate, and a piezoelectric element disposed on the movable film. The inkjet print head of Patent Literature 1 further includes a nozzle substrate bonded to a lower surface of the actuator substrate and having a nozzle hole in communication with the pressure chamber and a protective substrate bonded to an upper surface of the actuator substrate and covering the piezoelectric element. The piezoelectric element is constituted of a lower electrode formed on the movable film, an upper electrode disposed on the lower electrode, and a piezoelectric film sandwiched between the two. One end portion of a wiring is connected to the upper electrode.

CITATION LIST

Patent Literature

Patent Literature 1: Japanese Patent Application Publication No. 2018-69685

SUMMARY OF INVENTION

Technical Problem

With the inkjet print head described in Patent Literature 1, when the piezoelectric element undergoes dielectric breakdown, an excessive current flows through the wiring and Joule heat is generated in the wiring. Due to the Joule heat, the movable film may become damaged and ink may leak. The inkjet print head includes a plurality of piezoelectric elements and there is thus a problem that if an ink leakage occurs due to dielectric breakdown of one piezoelectric element, wirings connected to other adjacent piezoelectric elements degrade and a fault range spreads.

An object of the present disclosure is to provide an inkjet print head with which, when a piezoelectric element undergoes dielectric breakdown, etc., continuous flow of an excessive current through a wiring can be prevented and damage of a movable film due to Joule heat generated in the wiring can be suppressed.

Solution to Problem

A preferred embodiment of the present disclosure provides an inkjet print head including an actuator substrate that has an ink flow passage including a pressure chamber, a movable film formation layer that includes a movable film disposed on the pressure chamber and demarcating a top surface portion of the pressure chamber, a piezoelectric element that includes a lower electrode disposed on the movable film, a piezoelectric film formed on the lower electrode, and an upper electrode formed on the piezoelectric film, a hydrogen barrier film that covers at least entire side surfaces of the upper electrode and the piezoelectric film among surfaces of the piezoelectric element, an interlayer insulating film that is formed on the movable film formation layer such as to cover the hydrogen barrier film, and a wiring that is formed on the interlayer insulating film and is connected to the piezoelectric element and where a fuse is inserted in an intermediate portion of the wiring.

With this arrangement, when the piezoelectric element undergoes dielectric breakdown, etc., continuous flow of an excessive current through the wiring can be prevented and damage of the movable film due to Joule heat generated in the wiring can be suppressed.

In the preferred embodiment of the present disclosure, the actuator substrate has a cavity below the fuse.

In the preferred embodiment of the present disclosure, the fuse is constituted of a conductor constituted of the same material as the wiring and being less in width than the wiring.

In the preferred embodiment of the present disclosure, the wiring has a first wiring portion and a second wiring portion that are electrically connected via the fuse, the first wiring portion has a first end portion that is connected to the piezoelectric element and a second end portion that is connected to the fuse, the second wiring portion has a first end portion that is connected to the fuse and a second end portion at an opposite side thereof, and the fuse is arranged from a conductor, a first contact that connects the second end portion of the first wiring portion and a first end portion of the conductor and a second contact that connects the first end portion of the second wiring portion and a second end portion at an opposite side to the first end portion of the conductor.

In the preferred embodiment of the present disclosure, the wiring is an upper wiring with one end connected to the upper electrode of the piezoelectric element, a dummy piezoelectric element that is of the same structure as the piezoelectric element but does not operate as a piezoelectric element is formed on the movable film formation layer, and the conductor is an upper electrode of the dummy piezoelectric element.

In the preferred embodiment of the present disclosure, the hydrogen barrier film and the interlayer insulating film cover a surface of the dummy piezoelectric element.

In the preferred embodiment of the present disclosure, the hydrogen barrier film and the interlayer insulating film are formed at least on a portion of an upper surface of the upper electrode of the piezoelectric element, an upper contact hole that exposes a portion of the upper surface of the upper electrode of the piezoelectric element is formed in the hydrogen barrier film and the interlayer insulating film formed on the upper surface of the upper electrode of the piezoelectric element, the first end portion of the first wiring portion enters into the upper contact hole and is connected to the upper electrode inside the upper contact hole, a first contact hole that exposes a portion of the first end portion of the conductor and a second contact hole that exposes a portion of the second end portion of the conductor are formed in the hydrogen barrier film and the interlayer insulating film formed on the upper surface of the conductor constituted of the upper electrode of the dummy piezoelectric element, the first contact connects the second end portion of the first wiring portion and the first end portion of the conductor via the first contact hole, and the second contact connects the first end portion of the second wiring portion and the second end portion of the conductor via the second contact hole.

In the preferred embodiment of the present disclosure, if a portion of the first wiring portion that is connected to the upper electrode via the upper contact hole is an upper contact, a transverse cross-sectional area of at least one of

the first contact and the second contact is less than a transverse cross-sectional area of the upper contact.

In the preferred embodiment of the present disclosure, a width of the conductor is less than a width of the upper wiring.

In the preferred embodiment of the present disclosure, the wiring is an upper wiring with one end connected to the upper electrode of the piezoelectric element and the conductor is constituted of a metal film that is formed on the movable film formation layer and is constituted of the same material as the lower electrode.

In the preferred embodiment of the present disclosure, the hydrogen barrier film and the interlayer insulating film cover a surface of the conductor.

In the preferred embodiment of the present disclosure, the hydrogen barrier film and the interlayer insulating film are formed at least on a portion of an upper surface of the upper electrode of the piezoelectric element, an upper contact hole that exposes a portion of the upper surface of the upper electrode of the piezoelectric element is formed in the hydrogen barrier film and the interlayer insulating film formed on the upper surface of the upper electrode of the piezoelectric element, the first end portion of the first wiring portion enters into the upper contact hole and is connected to the upper electrode inside the upper contact hole, a first contact hole that exposes a portion of the first end portion of the conductor and a second contact hole that exposes a portion of the second end portion of the conductor are formed in the hydrogen barrier film and the interlayer insulating film formed on the upper surface of the conductor, the first contact connects the second end portion of the first wiring portion and the first end portion of the conductor via the first contact hole, and the second contact connects the first end portion of the second wiring portion and the second end portion of the conductor via the second contact hole.

In the preferred embodiment of the present disclosure, if a portion of the first wiring portion that is connected to the upper electrode via the upper contact hole is an upper contact, a transverse cross-sectional area of at least one of the first contact and the second contact is less than a transverse cross-sectional area of the upper contact.

In the preferred embodiment of the present disclosure, a width of the conductor is less than a width of the upper wiring.

In the preferred embodiment of the present disclosure, a passivation film that is formed on the interlayer insulating film and covers the wiring is included.

In the preferred embodiment of the present disclosure, a plurality of the pressure chambers are provided, the piezoelectric element is provided according to each of the pressure chambers, and, in the actuator substrate, a plurality of pressure chamber columns, each constituted of a plurality of the pressure chambers that are disposed at intervals in a predetermined first direction, are formed at intervals in a second direction orthogonal to the first direction in plan view.

The aforementioned as well as yet other objects, features, and effects of the present disclosure will be made clear by the following description of the preferred embodiments made with reference to the accompanying drawings.

BRIEF DESCRIPTION OF DRAWINGS

FIG. **1** is an illustrative plan view for describing the arrangement of an inkjet print head according to a first preferred embodiment of the present disclosure.

FIG. **2** is an illustrative partially enlarged plan view showing a portion C of FIG. **1** in enlarged manner and is a plan view including a protective substrate.

FIG. **3** is an illustrative partially enlarged plan view showing the portion C of FIG. **1** in enlarged manner and is a plan view with the protective substrate omitted.

FIG. **4**A is an illustrative sectional view taken along line A-A of FIG. **2**.

FIG. **4**B is an illustrative sectional view taken along line B-B of FIG. **2**.

FIG. **5** is an illustrative sectional view taken along line V-V of FIG. **2**.

FIG. **6** is an illustrative sectional view taken along line VI-VI of FIG. **2**.

FIG. **7** is an illustrative plan view showing a pattern example of an insulating film of the inkjet print head of FIG. **1** and is a plan view corresponding to FIG. **2**.

FIG. **8** is an illustrative plan view showing a pattern example of a passivation film of the inkjet print head of FIG. **1** and is a plan view corresponding to FIG. **2**.

FIG. **9** is a bottom view of a region of the protective substrate indicated in FIG. **2**.

FIG. **10** is a plan view of a semiconductor wafer as a base substrate of an actuator substrate.

FIG. **11**A is a sectional view of an example of a manufacturing process of the inkjet print head of FIG. **1**.

FIG. **11**B is a sectional view of a step subsequent to that of FIG. **11**A.

FIG. **11**C is a sectional view of a step subsequent to that of FIG. **11**B.

FIG. **11**D is a sectional view of a step subsequent to that of FIG. **11**C.

FIG. **11**E is a sectional view of a step subsequent to that of FIG. **11**D.

FIG. **11**F is a sectional view of a step subsequent to that of FIG. **11**E.

FIG. **11**G is a sectional view of a step subsequent to that of FIG. **11**F.

FIG. **11**H is a sectional view of a step subsequent to that of FIG. **11**G.

FIG. **11**I is a sectional view of a step subsequent to that of FIG. **11**H.

FIG. **11**J is a sectional view of a step subsequent to that of FIG. **11**I.

FIG. **11**K is a sectional view of a step subsequent to that of FIG. **11**J.

FIG. **12**A is a sectional view of an example of a manufacturing process of the inkjet print head of FIG. **1**.

FIG. **12**B is a sectional view of a step subsequent to that of FIG. **12**A.

FIG. **12**C is a sectional view of a step subsequent to that of FIG. **12**B.

FIG. **12**D is a sectional view of a step subsequent to that of FIG. **12**C.

FIG. **12**E is a sectional view of a step subsequent to that of FIG. **12**D.

FIG. **12**F is a sectional view of a step subsequent to that of FIG. **12**E.

FIG. **12**G is a sectional view of a step subsequent to that of FIG. **12**F.

FIG. **12**H is a sectional view of a step subsequent to that of FIG. **12**G.

FIG. **12**I is a sectional view of a step subsequent to that of FIG. **12**H.

FIG. **12**J is a sectional view of a step subsequent to that of FIG. **12**I.

FIG. **12**K is a sectional view of a step subsequent to that of FIG. **12**J.

FIG. **13** is an illustrative plan view for describing the arrangement of an inkjet print head according to a second preferred embodiment of the present disclosure.

FIG. **14** is an illustrative partially enlarged plan view showing a portion C of FIG. **13** in enlarged manner and is a plan view including a protective substrate.

FIG. **15** is an illustrative partially enlarged plan view showing the portion C of FIG. **13** in enlarged manner and is a plan view with the protective substrate omitted.

FIG. **16**A is an illustrative sectional view taken along line A-A of FIG. **14**.

FIG. **16**B is an illustrative sectional view taken along line B-B of FIG. **14**.

FIG. **17**A is a sectional view of an example of a manufacturing process of the inkjet print head of FIG. **13**.

FIG. **17**B is a sectional view of a step subsequent to that of FIG. **17**A.

FIG. **17**C is a sectional view of a step subsequent to that of FIG. **17**B.

FIG. **17**D is a sectional view of a step subsequent to that of FIG. **17**C.

FIG. **17**E is a sectional view of a step subsequent to that of FIG. **17**D.

FIG. **17**F is a sectional view of a step subsequent to that of FIG. **17**E.

FIG. **17**G is a sectional view of a step subsequent to that of FIG. **17**F.

FIG. **17**H is a sectional view of a step subsequent to that of FIG. **17**G.

FIG. **17**I is a sectional view of a step subsequent to that of FIG. **17**H.

FIG. **17**J is a sectional view of a step subsequent to that of FIG. **17**I.

FIG. **18**A is a sectional view of an example of a manufacturing process of the inkjet print head of FIG. **13**.

FIG. **18**B is a sectional view of a step subsequent to that of FIG. **18**A.

FIG. **18**C is a sectional view of a step subsequent to that of FIG. **18**B.

FIG. **18**D is a sectional view of a step subsequent to that of FIG. **18**C.

FIG. **18**E is a sectional view of a step subsequent to that of FIG. **18**D.

FIG. **18**F is a sectional view of a step subsequent to that of FIG. **18**E.

FIG. **18**G is a sectional view of a step subsequent to that of FIG. **18**F.

FIG. **18**H is a sectional view of a step subsequent to that of FIG. **18**G.

FIG. **18**I is a sectional view of a step subsequent to that of FIG. **18**H.

FIG. **18**J is a sectional view of a step subsequent to that of FIG. **18**I.

FIG. **19** is an illustrative plan view for describing the arrangement of an inkjet print head according to a third preferred embodiment of the present disclosure.

FIG. **20** is an illustrative partially enlarged plan view showing a portion C of FIG. **19** in enlarged manner and is a plan view including a protective substrate.

FIG. **21** is an illustrative partially enlarged plan view showing the portion C of FIG. **19** in enlarged manner and is a plan view with the protective substrate omitted.

FIG. **22**A is an illustrative sectional view taken along line A-A of FIG. **20**.

FIG. **22**B is an illustrative sectional view taken along line B-B of FIG. **20**.

FIG. **23**A is a sectional view of an example of a manufacturing process of the inkjet print head of FIG. **19**.

FIG. **23**B is a sectional view of a step subsequent to that of FIG. **23**A.

FIG. **23**C is a sectional view of a step subsequent to that of FIG. **23**B.

FIG. **23**D is a sectional view of a step subsequent to that of FIG. **23**C.

FIG. **23**E is a sectional view of a step subsequent to that of FIG. **23**D.

FIG. **23**F is a sectional view of a step subsequent to that of FIG. **23**E.

FIG. **23**G is a sectional view of a step subsequent to that of FIG. **23**F.

FIG. **23**H is a sectional view of a step subsequent to that of FIG. **23**G.

FIG. **23**I is a sectional view of a step subsequent to that of FIG. **23**H.

FIG. **23**J is a sectional view of a step subsequent to that of FIG. **23**I.

FIG. **24**A is a sectional view of an example of a manufacturing process of the inkjet print head of FIG. **19**.

FIG. **24**B is a sectional view of a step subsequent to that of FIG. **24**A.

FIG. **24**C is a sectional view of a step subsequent to that of FIG. **24**B.

FIG. **24**D is a sectional view of a step subsequent to that of FIG. **24**C.

FIG. **24**E is a sectional view of a step subsequent to that of FIG. **24**D.

FIG. **24**F is a sectional view of a step subsequent to that of FIG. **24**E.

FIG. **24**G is a sectional view of a step subsequent to that of FIG. **24**F.

FIG. **24**H is a sectional view of a step subsequent to that of FIG. **24**G.

FIG. **24**I is a sectional view of a step subsequent to that of FIG. **24**H.

FIG. **24**J is a sectional view of a step subsequent to that of FIG. **24**I.

DESCRIPTION OF EMBODIMENTS

[1] First Preferred Embodiment

FIG. **1** is an illustrative plan view for describing the arrangement of an inkjet print head according to a first preferred embodiment of the present disclosure. FIG. **2** is an illustrative partially enlarged plan view showing a portion C of FIG. **1** in enlarged manner and is a plan view including a protective substrate. FIG. **3** is an illustrative partially enlarged plan view showing the portion C of FIG. **1** in enlarged manner and is a plan view with the protective substrate omitted. FIG. **4**A is an illustrative sectional view taken along line A-A of FIG. **2**. FIG. **4**B is an illustrative sectional view taken along line B-B of FIG. **2**. FIG. **5** is an illustrative sectional view taken along line V-V of FIG. **2**. FIG. **6** is an illustrative sectional view taken along line VI-VI of FIG. **2**.

The arrangement of the inkjet print head **1** shall now be described in outline with reference to FIG. **4**A and FIG. **4**B.

The inkjet print head **1** includes an actuator substrate assembly SA including an actuator substrate **2** and piezoelectric elements **9**, a nozzle substrate **3**, and a protective

substrate **4**. In the following, the actuator substrate assembly SA shall be referred to as the "substrate assembly SA."

The actuator substrate **2** is constituted, for example, of a silicon (Si) substrate. A movable film formation layer **10** is laminated on a front surface **2***a* of the actuator substrate **2**. Ink flow passages (ink reservoirs) **5** and cavities **19** are formed in the actuator substrate **2**. In this preferred embodiment, the ink flow passages **5** are formed such as to penetrate through the actuator substrate **2**. Each ink flow passage **5** is formed such as to be thinly elongate along an ink flow direction **41** indicated by arrows in FIG. **4**A and FIG. **4**B. The ink flow passage **5** is constituted of an ink inflow portion **6** at an upstream side end portion (the left end portion in FIG. **4**A) in the ink flow direction **41** and a pressure chamber **7** that is in communication with the ink inflow portion **6**. In FIG. **4**A, a boundary between the ink inflow portion **6** and the pressure chamber **7** is indicated by an alternate long and two short dashed line.

The cavities **19** are disposed at a downstream side in the ink flow direction **41** with respect to the ink flow passages **5**. In this preferred embodiment, the cavities **19** are formed such as to penetrate through the actuator substrate **2**. The cavities **19** are formed such as to extend along the ink flow direction **41**. Each cavity **19** is formed below a region that includes a fuse **20** to be described below and a vicinity thereof.

The nozzle substrate **3** is constituted, for example, of a silicon (Si) substrate. The nozzle substrate **3** is bonded to a rear surface **2***b* of the actuator substrate **2**. Together with the actuator substrate **2** and the movable film formation layer **10**, the nozzle substrate **3** demarcates the ink flow passages **5**. More specifically, the nozzle substrate **3** demarcates bottom surface portions of the ink flow passages **5**. Also, together with the actuator substrate **2** and the movable film formation layer **10**, the nozzle substrate **3** demarcates the cavities **19**. More specifically, the nozzle substrate **3** demarcates bottom surface portions of the cavities **19**. Nozzle holes **3***a* are formed in the nozzle substrate **3**. Each nozzle hole **3***a* has an ink discharge port **3***b* at an opposite side to the pressure chamber **7**.

Portions of the movable film formation layer **10** that are top wall portions of the pressure chambers **7** constitute movable films **10**A. The movable films **10**A (movable film formation layer **10**) are constituted, for example, of a silicon oxide (SiO_2) film formed on the actuator substrate **2**. In this description, the movable films **10**A refer to top wall portions of the movable film formation layer **10** that demarcate top surfaces of the pressure chambers **7**. Therefore, a portion of the movable film formation layer **10** other than the top wall portions of the pressure chambers **7** does not constitute a movable film **10**A.

A thickness of each movable film **10**A is, for example, 0.4 μm to 2 μm. The thickness of the movable film **10**A may be approximately 1.2 μm.

The pressure chambers **7** are demarcated by the movable films **10**A, the actuator substrate **2**, and the nozzle substrate **3** and, in this preferred embodiment, are formed to substantially rectangular parallelepiped shapes that are long in the ink flow direction **41**. A length of each pressure chamber **7** may, for example, be approximately 800 μm and a width thereof may be approximately 55 μm. The ink inflow portion **6** is in communication with one end portion in a long direction of the pressure chamber **7**.

A first hydrogen barrier film **8** is formed on a front surface of the movable film formation layer **10**. The first hydrogen barrier film **8** is constituted, for example, of Al_2O_3 (alumina). A thickness of the first hydrogen barrier film **8** is approximately 50 nm to 100 nm. On a front surface of the first hydrogen barrier film **8**, the piezoelectric elements **9** are disposed at positions above the movable films **10**A. Each piezoelectric element **9** includes a lower electrode **11** formed on the first hydrogen barrier film **8**, a piezoelectric film **12** formed on the lower electrode **11**, and an upper electrode **13** formed on the piezoelectric film **12**. In other words, the piezoelectric element **9** is arranged by sandwiching the piezoelectric film **12** from above and below with the upper electrode **13** and the lower electrode **11**.

The upper electrode **13** may be a single film of platinum (Pt) or may have a laminated structure with which, for example, a conductive oxide film (for example, an IrO_2 (iridium oxide) film) and a metal film (for example, an Ir (iridium) film) are laminated. A thickness of the upper electrode **13** may, for example, be approximately 0.2 μm.

As the piezoelectric film **12**, for example, a PZT ($PbZr_xTi_{1-x}O_3$: lead zirconate titanate) film formed by a sol-gel method or a sputtering method can be applied. Such a piezoelectric film **12** is constituted of a sintered body of a metal oxide crystal. The piezoelectric film **12** is formed to be of the same shape as the upper electrode **13** in plan view. A thickness of the piezoelectric film **12** is approximately 1 μm. An overall thickness of the movable film **10**A is preferably approximately the same as the thickness of the piezoelectric film **12** or approximately ⅔ the thickness of the piezoelectric film **12**.

The first hydrogen barrier film **8** mentioned above prevents degradation of characteristics due to hydrogen reduction of the piezoelectric films **12**. Further, the first hydrogen barrier film **8** prevents metal elements (Pb, Zr, and Ti in the case where the piezoelectric films **12** are of PZT) from escaping from the piezoelectric films **12**, keeps piezoelectric properties of the piezoelectric films **12** satisfactory, and prevents diffusion of metals into the movable films **10**A during forming of the piezoelectric films **12**.

Each lower electrode **11** has, for example, a two-layer structure with which a Ti (titanium) film and a Pt (platinum) film are laminated successively from the first hydrogen barrier film **8** side. Besides this, the lower electrode **11** can be formed with a single film, such an Au (gold) film, a Cr (chromium) layer, an Ni (nickel) layer, etc. The lower electrode **11** has main electrode portions **11**A in contact with lower surfaces of the piezoelectric films **12** and an extension portion **11**B extending to a region outside the piezoelectric films **12**. A thickness of the lower electrode **11** may, for example, be approximately 0.2 μm.

A second hydrogen barrier film **14** is formed on the piezoelectric elements **9**, on the extension portions **11**B of the lower electrodes **11**, and on the first hydrogen barrier film **8**. The second hydrogen barrier film **14** is constituted, for example, of Al_2O_3 (alumina). A thickness of the second hydrogen barrier film **14** is approximately 50 nm to 100 nm. The second hydrogen barrier film **14** is provided to prevent degradation of characteristics due to hydrogen reduction of the piezoelectric films **12**. The second hydrogen barrier film **14** is an example of a "hydrogen barrier film" in the present disclosure.

An insulating film **15** is laminated on the second hydrogen barrier film **14**. The insulating film **15** is constituted, for example, of SiO_2, SiN of low hydrogen, etc. A thickness of the insulating film **15** is approximately 500 nm. Upper wirings **17** and lower wirings **18** (see FIG. **2** and FIG. **6**) are formed on the insulating film **15**. These wirings may be constituted of a metal material including Al (aluminum). A thickness of these wirings is, for example, approximately 1000 nm (1 μm).

In an intermediate portion of each upper wiring **17** is inserted a fuse **20** that is cut by fusion when an excessive current flows through the upper wiring **17**. The upper wiring **17** has a first wiring portion **17**A and a second wiring portion **17**B that are connected via the fuse **20**. Referring to FIG. **2** and FIG. **3**, the fuse **20**, in plan view, is of an oblong shape that is long in the ink flow direction **41**. The fuse **20** is constituted of the same material as the upper wiring and is arranged from a conductor with a thickness that is the same as the thickness of the upper wiring **17** and with a width narrower than the upper wiring **17**. The first wiring portion **17**A, the fuse **20**, and the second wiring portion **17**B are formed integrally.

As mentioned above, in the actuator substrate **2**, each cavity **19** is formed below the region that includes the fuse **20** and the vicinity thereof. The cavity **19** is disposed at the downstream side in the ink flow direction **41** with respect to the ink flow passage **5**. The cavity **19** is of substantially rectangular parallelepiped shape that is long in the ink flow direction **41**. In plan view, the cavity **19** has an oblong shape that is elongate along the ink flow direction **41**. That is, a top surface portion of the cavity **19** has two side edges oriented along the ink flow direction **41** and two end edges oriented along a direction orthogonal to the ink flow direction **41**.

A width of the cavity **19** is greater than the width of the fuse **20** and greater than the width of the upper wiring **17**. In this preferred embodiment, the width of the cavity **19** is substantially equal to the width of the pressure chamber **7**. A length of the cavity **19** is longer than a length of the fuse **20**. In this preferred embodiment, the length of the cavity **19** is shorter than the length of the pressure chamber **7**. In plan view, both side edges oriented along a long direction of the fuse **20** are receded further inward than corresponding both side edges of the cavity **19**. In plan view, both end edges oriented along a short direction of the fuse **20** are receded further inward than corresponding both end edges of the cavity **19**.

The reason for the cavity **19** being formed in the actuator substrate **2** is as follows. If the cavity **19** is not provided, even when an excessive current flows through the upper wiring **17** and the fuse **20** becomes heated, the heat escapes by being transmitted to the actuator substrate **2** that is constituted of the Si substrate and the fuse **20** is unlikely to be cut by fusion. The cavity **19** is thus formed to suppress the heat, generated in the fuse **20** when an excessive current flows through the upper wiring **17**, from escaping by being transmitted to the actuator substrate **2**.

One end portion (first end portion) of the first wiring portion **17**A is disposed above one end portion (end portion at the downstream side in the ink flow direction **41**) of the upper electrode **13**. A contact hole **31** that penetrates continuously through the second hydrogen barrier film **14** and the insulating film **15** is formed between the first wiring portion **17**A and the upper electrode **13**. The one end portion of the first wiring portion **17**A enters into the contact hole **31** and is connected to the upper electrode **13** inside the contact hole **31**.

The first wiring portion **17**A extends from an upper side of the upper electrode **13** to an outer side of the pressure chamber **7** upon crossing an outer edge of the pressure chamber **7**. Another end portion (second end portion) of the first wiring portion **17**A is connected to one end portion (first end portion) of the fuse **20**. More specifically, the one end portion of the fuse **20** is connected to a width intermediate portion of the other end portion of the first wiring portion **17**A. One end portion (first end portion) of the second wiring portion **17**B is connected to another end portion (second end portion) of the fuse **20**. More specifically, the other end portion of the fuse **20** is connected to a width intermediate portion of the one end portion of the second wiring portion **17**B. The second wiring portion **17**B extends along an extension line of the first wiring portion **17**A. The lower wirings **18** shall be described later.

A passivation film **33** that covers the upper wirings **17**, the lower wirings **18**, the fuses **20**, and the insulating film **15** is formed on the insulating film **15**. The passivation film **33** is constituted, for example, of SiN (silicon nitride). A thickness of the passivation film **33** may, for example, be approximately 800 nm.

Pad openings **34** that expose portions of the second wiring portions **17**B are formed in the passivation film **33**. The pad openings **34** are formed in regions at the downstream side in the ink flow direction **41** with respect to the cavities **19** and are formed, for example, at tip portions (end portions at opposite sides to end portions connecting to the fuses **20**) of the second wiring portions **17**B. Upper electrode pads **42** that cover the pad openings **34** are formed on the passivation film **33**. The upper electrode pads **42** enter into the pad openings **34** and are connected to the second wiring portions **17**B inside the pad openings **34**. Lower electrode pads **43** (see FIG. **1**, FIG. **2**, FIG. **3**, and FIG. **6**) is also provided for the lower wirings **18** and the lower electrode pads **43** shall be described later.

At positions corresponding to end portions of the ink flow passages **5** at the ink inflow portion **6** sides are formed ink supplying penetrating holes **44** that penetrate through the passivation film **33**, the insulating film **15**, the second hydrogen barrier film **14**, the first hydrogen barrier film **8**, and the movable film formation layer **10**. Each ink supplying penetrating hole **44** is in communication with the ink inflow portion **6**.

The protective substrate **4** is constituted, for example, of a silicon substrate. The protective substrate **4** is disposed on the substrate assembly SA such as to cover the piezoelectric elements **9** and the fuses **20**. The protective substrate **4** is bonded via an adhesive **50** to the substrate assembly SA. The protective substrate **4** has first recesses **52** and second recesses **53** in an opposing surface **51** that opposes the substrate assembly SA. The piezoelectric elements **9** are housed in the first recesses **52**. The second recesses **53** face the regions of the fuses **20** and the vicinities thereof. Each second recess **53** is formed to suppress the heat of the fuse **20** from escaping by being transmitted to the protective substrate **4** when an overcurrent flows through the upper wiring **17**.

Further, ink supply passages **54** in communication with the ink supplying penetrating holes **44** and opening portions **55** for exposing the pads **42** and **43** are formed in the protective substrate **4**. The ink supply passages **54** and the opening portions **55** penetrate through the protective substrate **4**. An ink tank (not shown) that stores an ink is disposed on the protective substrate **4**.

The piezoelectric elements **9** are formed at positions opposing the pressure chambers **7** across the movable films **10**A and the first hydrogen barrier film **8**. That is, the piezoelectric elements **9** are formed such as to contact the front surface of the first hydrogen barrier film **8** at an opposite side to the pressure chambers **7**. The pressure chambers **7** are filled with the ink by the ink being supplied from the ink tank to the pressure chambers **7** through the ink supply passages **54**, the ink supplying penetrating holes **44**, and the ink inflow portions **6**. The movable films **10**A demarcate top surface portions of the pressure chambers **7** and face the pressure chambers **7**. Each movable film **10**A

is supported by a portion of the actuator substrate **2** at a periphery of the pressure chamber **7** and has a flexibility enabling deformation in a direction opposing the pressure chamber **7** (in other words, in a thickness direction of the movable film **10**A).

The lower wirings **18** (see FIG. **2**, FIG. **3**, and FIG. **6**) and the upper wirings **17** are connected to a drive circuit (not shown). Specifically, the upper electrode pads **42** and the drive circuit are connected via a connecting metal member (not shown). The lower electrode pad **43** (see FIG. **2**, FIG. **3**, and FIG. **6**) and the drive circuit are connected via a connecting metal member (not shown). When a drive voltage is applied from the drive circuit to a piezoelectric element **9**, the piezoelectric film **12** deforms due to a piezoelectric effect. The piezoelectric element **9** and the movable film **10**A thereby deform, a volume change is thereby brought about in the pressure chamber **7**, and the ink inside the pressure chamber **7** is pressurized. The pressurized ink passes through the nozzle hole **3***a* and is discharged as microdroplets from the ink discharge port **3***b*.

The arrangement of the inkjet print head **1** shall now be described more specifically with reference to FIG. **1** to FIG. **6**. In the following description, a left side of FIG. **1** shall be referred to as "left," a right side of FIG. **1** shall be referred to as "right," a lower side of FIG. **1** shall be referred to as "front," and an upper side of FIG. **1** shall be referred to as "rear," respectively.

As shown in FIG. **1**, a plan-view shape of the inkjet print head **1** is an oblong shape. In this preferred embodiment, planar shapes and sizes of the actuator substrate **2**, the protective substrate **4**, and the nozzle substrate **3** are substantially the same as the planar shape and size of the inkjet print head **1**.

In plan view, a plurality of columns (hereinafter referred to as "piezoelectric element columns"), each being of a plurality of the piezoelectric elements **9** aligned in a stripe at intervals in a front/rear direction, are provided respectively at an interval in a right/left direction on the actuator substrate **2**. For convenience of description, it shall be deemed that two of the piezoelectric element columns are provided in this preferred embodiment.

As shown in FIG. **2** and FIG. **3**, the ink flow passages **5** (pressure chambers **7**) are formed respectively according to each of the piezoelectric elements **9** in the actuator substrate **2**. Therefore, in plan view, two of ink flow passage columns (pressure chamber columns), each constituted of a plurality of the ink flow passages **5** (pressure chambers **7**) aligned in a stripe at intervals in the front/rear direction, are provided at an interval in the right/left direction in the actuator substrate **2**.

A pattern of the ink flow passage column corresponding to the piezoelectric element column at the left side of FIG. **1** and a pattern of the ink flow passage column corresponding to the piezoelectric element column at the right side are patterns that are right/left symmetrical with respect to a straight line joining centers between the columns. Therefore, whereas with the ink flow passages **5** that are included in the ink flow passage column at the left side, the ink inflow portions **6** are at the right sides of the pressure chambers **7** (piezoelectric elements **9**), with the ink flow passage **5** that are included in the ink flow passage column at the right side, the ink inflow portions **6** are at the left sides of the pressure chambers **7** (piezoelectric elements **9**). The ink flow directions **41** are thus mutually opposite directions for the ink flow passage column at the left side and the ink flow passage column at the right side.

The ink supplying penetrating holes **44** are provided respectively according to each of the plurality of ink flow passages **5** of each ink flow passage column. The ink supplying penetrating holes **44** are disposed on the ink inflow portions **6**. Therefore, the ink supplying penetrating holes **44** for the ink flow passages **5** included in the ink flow passage column at the left side are disposed on right end portions of the ink flow passages **5** and the ink supplying penetrating holes **44** for the ink flow passages **5** included in the ink flow passage column at the right side are disposed on left end portions of the ink flow passages **5**.

The cavities **19** are provided respectively according to each of the plurality of ink flow passages **5** of each ink flow passage column. The cavities **19** corresponding to the ink flow passage column at the left side are disposed at the left sides of the ink flow passages **5** and the cavities **19** corresponding to the ink flow passage column at the right side are disposed at the right sides of the ink flow passages **5**.

In each ink flow passage column, the plurality of ink flow passages **5** are formed at equal intervals that are minute intervals (of, for example, approximately 30 μm to 350 μm) in width directions thereof. Similarly, in each ink flow passage column, the plurality of cavities **19** are formed at equal intervals that are minute intervals in width directions thereof.

Each ink flow passage **5** is thinly elongate along the ink flow direction **41**. The ink flow passage **5** is constituted of the ink inflow portion **6** in communication with the ink supplying penetrating hole **44** and the pressure chamber **7** in communication with the ink inflow portion **6**. In plan view, the pressure chamber **7** has an oblong shape that is thinly elongate along the ink flow direction **41**. That is, the top surface portion of the pressure chamber **7** has two side edges oriented along the ink flow direction **41** and two end edges oriented along a direction orthogonal to the ink flow direction **41**. The ink inflow portion **6** has substantially the same width as the pressure chamber **7** in plan view. An inner surface of an end portion of the ink inflow portion **6** at an opposite side to the pressure chamber **7** is formed to a semicircular shape in plan view. The ink supplying penetrating hole **44** is of a circular shape in plan view (see especially FIG. **3**).

In plan view, each piezoelectric element **9** has a rectangular shape that is long in the long direction of the pressure chamber **7** (movable film **10**A). An end portion of the piezoelectric element **9** at the ink supplying penetrating hole **44** side is formed to a semicircular shape in plan view. A length in a long direction of the piezoelectric element **9** is shorter than a length in the long direction of the pressure chamber **7** (movable film **10**A). As shown in FIG. **3**, both end edges oriented along a short direction of the piezoelectric element **9** are respectively disposed at predetermined intervals inward from corresponding both end edges of the movable film **10**A. Also, a width in the short direction of the piezoelectric element **9** is narrower than a width in a short direction of the movable film **10**A. Both side edges oriented along the long direction of the piezoelectric element **9** are respectively disposed at predetermined intervals inward from corresponding both side edges of the movable film **10**A.

The lower electrodes **11** are provided respectively according to each of the piezoelectric element columns. The lower electrode **11** (hereinafter referred to at times as "first lower electrode **11**") provided for the piezoelectric element column at the left side is a common electrode that is shared by the plurality of piezoelectric elements **9** of the piezoelectric element column at the left side. The lower electrode **11**

(hereinafter referred to at times as "second lower electrode **11**") provided for the piezoelectric element column at the right side is a common electrode that is shared by the plurality of piezoelectric elements **9** of the piezoelectric element column at the right side.

As shown in FIG. **2** and FIG. **3**, in plan view, the second lower electrode **11** is constituted of a first rectangular region **61** that includes the plurality of piezoelectric elements **9** of the piezoelectric element column at the right side and a second rectangular region **62** that extends in the right direction from a rear end portion of the first rectangular region **61**. The second lower electrode **11** includes the main electrode portions **11**A of rectangular shape in plan view that constitute the respective piezoelectric elements **9** of the piezoelectric element column at the right side and the extension portion **11**B that is led out in a direction along the front surface of the movable film formation layer **10** from the main electrode portions **11**A and extends outside peripheral edges of the top surface portions of the pressure chambers **7**.

The first lower electrode **11** has a planar shape that is line symmetrical to the second lower electrode **11** with respect to a straight line passing through a center between the piezoelectric element column at the left side and the piezoelectric element column at the right side. In plan view, the first lower electrode **11** is constituted of a first rectangular region that includes the plurality of piezoelectric elements **9** of the piezoelectric element column at the left side and a second rectangular region that extends in the left direction from a rear end portion of the first rectangular region. The first lower electrode **11** includes the main electrode portions **11**A of rectangular shape in plan view that constitute the respective piezoelectric elements **9** of the piezoelectric element column at the left side and the extension portion **11**B that is led out in a direction along the front surface of the movable film formation layer **10** from the main electrode portions **11**A and extends outside peripheral edges of the top surface portions of the pressure chambers **7**.

In the first lower electrode **11** and the second lower electrode **11**, a length in a long direction of each main electrode portion **11**A is shorter than the length in the long direction of each movable film **10**A. Both end edges of the main electrode portion **11**A are respectively disposed at intervals inward from corresponding both end edges of the movable film **10**A. Also, a width in a short direction of the main electrode portion **11**A is narrower than the width in the short direction of the movable film **10**A. Both side edges of the main electrode portion **11**A are respectively disposed at intervals inward from corresponding both side edges of the movable film **10**A. In the first lower electrode **11**, the extension portion **11**B is a region among an entire region of the first lower electrode **11** that excludes the main electrode portions **11**A. In the second lower electrode **11**, the extension portion **11**B is a region among an entire region of the second lower electrode **11** that excludes the main electrode portions **11**A.

In plan view, the upper electrodes **13** are formed to rectangular shapes of the same pattern as the main electrode portions **11**A of the lower electrodes **11**. That is, a length in a long direction of each upper electrode **13** is shorter than the length in the long direction of each movable film **10**A. Both end edges of the upper electrode **13** are respectively disposed at intervals inward from corresponding both end edges of the movable film **10**A. Also, a width in a short direction of the upper electrode **13** is narrower than the width in the short direction of the movable film **10**A. Both side edges of the upper electrode **13** are respectively disposed at intervals inward from corresponding both side edges of the movable film **10**A.

In plan view, the piezoelectric films **12** are formed to rectangular shapes of the same pattern as the upper electrodes **13**. That is, a length in a long direction of each piezoelectric film **12** is shorter than the length in the long direction of each movable film **10**A. Both end edges of the piezoelectric film **12** are respectively disposed at intervals inward from corresponding both end edges of the movable film **10**A. Also, a width in a short direction of the piezoelectric film **12** is narrower than the width in the short direction of the movable film **10**A. Both side edges of the piezoelectric film **12** are respectively disposed at intervals inward from corresponding both side edges of the movable film **10**A. Lower surfaces of the piezoelectric films **12** contact upper surfaces of the main electrode portions **11**A of the lower electrodes **11** and upper surfaces of the piezoelectric films **12** contact lower surfaces of the upper electrodes **13**.

The first wiring portion **17**A of each upper wiring **17** extends from an upper surface of one end portion (end portion at the downstream side in the ink flow direction **41**) of the piezoelectric element **9** and along an end surface continuous thereto of the piezoelectric element **9** and further extends to the downstream side in the ink flow direction **41** along a front surface of the insulating film **15**. And, the other end portion of the first wiring portion **17**A is connected to the one end portion of the fuse **20**. The one end portion of the second wiring portion **17**B of the upper wiring **17** is connected to the other end portion of the fuse **20**. The other end portion of the second wiring portion **17**B extends to the downstream side in the ink flow direction **41** and is disposed inside the opening portion **55** of the protective substrate **4**.

The pad openings **34** that expose central portions of tip portion front surfaces of the second wiring portions **17**B are formed in the passivation film **33**. The upper electrode pads **42** are provided on the passivation film **33** such as to cover the pad openings **34**. The upper electrode pads **42** are connected to the second wiring portions **17**B inside the pad openings **34**.

As shown in FIG. **1**, the plurality of upper electrode pads **42** corresponding to the plurality of piezoelectric elements **9** in the piezoelectric element column at the left side are disposed such as to be aligned in a single column in the front/rear direction at the left side of the piezoelectric element column at the left side in plan view. Also, the plurality of upper electrode pads **42** corresponding to the plurality of piezoelectric elements **9** in the piezoelectric element column at the right side are disposed such as to be aligned in a single column in the front/rear direction at the right side of the piezoelectric element column at the right side in plan view.

Referring to FIG. **1**, FIG. **2**, FIG. **3**, and FIG. **6**, the lower wirings **18** include a lower wiring (hereinafter referred to at times as "first lower wiring **18**") that is disposed at a position at the rear of the upper electrode pad column at the left side in plan view and a lower wiring (hereinafter referred to at times as "second lower wiring **18**") that is disposed at a position at the rear of the upper electrode pad column at the right side. Each lower wiring **18** is of a quadrilateral shape in plan view.

The extension portion **11**B (second rectangular region) of the first lower electrode **11** is present below the first lower wiring **18**. The extension portion **11**B (second rectangular region **62**) of the second lower electrode **11** is present below the second lower wiring **18**. A contact hole **32** that penetrates continuously through the second hydrogen barrier film **14**

and the insulating film **15** is formed between each lower wiring **18** and the extension portion **11**B of the lower electrode **11** that is present below it. The lower wiring **18** enters into the contact hole **32** and is connected to the extension portion **11**B of the lower electrode **11** inside the contact hole **32**.

Pad openings **35** that expose central portions of front surfaces of the lower wirings **18** are formed in the passivation film **33**. Lower electrode pads **43** that cover the pad openings **35** are formed on the passivation film **33**. The lower electrode pads **43** enter into the pad openings **35** and are connected to the lower wirings **18** inside the pad openings **35**.

As shown in FIG. **1**, FIG. **2**, FIG. **4**A, and FIG. **4**B, the plurality of ink supply passages **54** (hereinafter referred to at times as "first ink supply passages **54**") that are in communication with the plurality of ink supplying penetrating holes **44** for the ink flow passage column at the left side and the plurality of ink supply passages **54** (hereinafter referred to at times as "second ink supply passages **54**") that are in communication with the plurality of ink supplying penetrating holes **44** for the ink flow passage column at the right side are formed in the protective substrate **4**. In plan view, the first ink supply passages **54** are disposed, in a single column and at intervals in the front/rear direction, at positions shifted to the left side with respect to a width center of the protective substrate **4**. In plan view, the second ink supply passages **54** are disposed, in a single column and at intervals in the front/rear direction, at positions shifted to the right side with respect to the width center of the protective substrate **4**. In plan view, the ink supply passages **54** are of circular shapes of the same pattern as the ink supplying penetrating holes **44** of the substrate assembly SA. The ink supply passages **54** are matched with the ink supplying penetrating holes **44** in plan view.

Also, the opening portion **55** for exposing all of the upper electrode pads **42** corresponding to the piezoelectric element column at the left side and the lower electrode pad **43** at the left side is formed in the protective substrate **4**. Also, the opening portion **55** for exposing all of the upper electrode pads **42** corresponding to the piezoelectric element column at the right side and the lower electrode pad **43** at the right side is formed in the protective substrate **4**. The opening portions **55** are of rectangular shapes that are long in the front/rear direction in plan view.

FIG. **9** is a bottom view of a region of the protective substrate indicated in FIG. **2**.

As shown in FIG. **2**, FIG. **4**A, FIG. **4**B, FIG. **5**, and FIG. **9**, in an opposing surface **51** of the protective substrate **4** that opposes the actuator substrate **2**, first recesses **52** are formed respectively at positions opposing the piezoelectric elements **9** in the respective piezoelectric element columns. Also, in the opposing surface **51** of the protective substrate **4**, second recesses **53** are formed respectively at positions opposing the fuses **20** corresponding to the respective piezoelectric elements in the respective piezoelectric element columns. The second recesses **53** are disposed at the downstream side in the ink flow direction **41** with respect to the respective first recesses **52**.

The ink supply passage **54** are disposed at an upstream side in the ink flow direction **41** with respect to the respective first recesses **52**. The opening portions **55** are disposed at the downstream side in the ink flow direction **41** with respect to the respective second recesses **53**. Each first recess **52** is formed to a rectangular shape that is slightly larger than a pattern of the upper electrode **13** of the corresponding piezoelectric element **9** in plan view. And, the corresponding piezoelectric element **9** is housed in each first recess **52**. Each second recess **53** is formed to a rectangular shape that is slightly larger than a pattern of the corresponding fuse **20** in plan view. And, the corresponding fuse **20** faces each second recess **53**.

FIG. **7** is an illustrative plan view showing a pattern example of the insulating film of the inkjet print head of FIG. **1**. FIG. **8** is an illustrative plan view showing a pattern example of the passivation film of the inkjet print head of FIG. **1**.

In this preferred embodiment, on the actuator substrate **2**, the insulating film **15** and the passivation film **33** are formed across substantially an entirety of a region outside the first recesses **52** of the protective substrate **4** in plan view. However, in this region, the ink supplying penetrating holes **44** and the contact holes **32** are formed in the insulating film **15**. In this region, the ink supplying penetrating holes **44** and the pad openings **34** and **35** are formed in the passivation film **33**.

In an inner region of each first recess **52** of the protective substrate **4**, the insulating film **15** and the passivation film **33** are formed just at one end portion (upper wiring region) at which the upper wiring **17** is present. In this region, the passivation film **33** is formed such as to cover an upper surface and side surfaces of the upper wiring **17** on the insulating film **15**. In other words, in the insulating film **15** and the passivation film **33**, an opening **36** is formed in a region in the inner region of the first recess **52** that excludes the upper wiring region in plan view. The contact hole **31** is further formed in the insulating film **15**.

An outline of a method for manufacturing the inkjet print head **1** shall now be described.

FIG. **10** is a plan view of a semiconductor wafer as a base substrate of the actuator substrate and shows a region of a portion in enlarged manner.

The semiconductor wafer (actuator wafer) **100** as the base substrate of the actuator substrate **2** is constituted, for example, of a silicon wafer. A front surface **100***a* of the actuator wafer **100** corresponds to being the front surface **2***a* of the actuator substrate. A plurality of functional element formation regions **101** are arrayed in a matrix on the front surface **100***a* of the actuator wafer **100**. A scribe region (boundary region) **102** is provided between adjacent functional element formation regions **101**. The scribe region **102** is a region of band shape having a substantially fixed width and extends in two orthogonal directions to be formed as a lattice. Intended cutting lines **103** are set in the scribe region **102**. By performing necessary steps on the actuator wafer **100**, a substrate assembly set (SA set) **110** (see FIG. **11**H and FIG. **12**H) with which the ink flow passages **5** and the cavities **19** are not formed but the arrangement of the substrate assembly SA is formed on each functional element formation region **101** is prepared.

A protective substrate set **130** (see FIG. **11**I and FIG. **12**I) that integrally includes a plurality of the protective substrates **4** corresponding to the respective functional element formation regions **101** of the substrate assembly set **110** is prepared in advance. The protective substrate set **130** is prepared by performing necessary steps on a semiconductor wafer (protective substrate wafer) as a base substrate of the protective substrate **4**. The protective substrate wafer is constituted, for example, of a silicon wafer.

Also, a nozzle substrate set **150** (see FIG. **11**K and FIG. **12**K) that integrally includes a plurality of the nozzle substrates **3** corresponding to the respective functional element formation regions **101** of the substrate assembly set **110** is prepared in advance. The nozzle substrate set **150** is

prepared by performing necessary steps on a semiconductor wafer (nozzle wafer) as a base substrate of the nozzle substrate **3**. The nozzle wafer is constituted, for example, of a silicon wafer.

When the substrate assembly set **110** is prepared, the protective substrate set **130** is bonded to the substrate assembly set **110**. Next, the ink flow passages **5** and the cavities **19** are formed in the substrate assembly set **110**. Next, the nozzle substrate set **150** is bonded to the substrate assembly set **110**. An inkjet print head set **170** (see FIG. **11**K and FIG. **12**K) that is constituted of the substrate assembly set **110**, the protective substrate set **130**, and the nozzle substrate set **150** is thereby obtained. Thereafter, the inkjet print head set **170** is cut (diced) along the intended cutting lines **103** by a dicing blade. Each individual inkjet print head (chip) **1** that includes the functional element formation region **101** is thereby cut out. The inkjet print head **1** is made to have the scribe region **102** at a peripheral edge region and the functional element formation region **101** in a central region surrounded by the scribe region **102**.

The method for manufacturing the inkjet print head **1** shall be described specifically below.

FIG. **11**A to FIG. **11**K and FIG. **12**A to FIG. **12**K are sectional views showing a manufacturing process of the inkjet print head **1**. FIG. **11**A to FIG. **11**K are sectional views corresponding to the section plane of FIG. **4**A and FIG. **12**A to FIG. **12**K are sectional views corresponding to the section plane of FIG. **4**B.

First, as shown in FIG. **11**A and FIG. **12**A, the actuator wafer **100** is prepared. However, as the actuator wafer **100**, that which is thicker than a thickness of the actuator substrate **2** at the final stage is used. The movable film formation layer **10** is then formed on the front surface **100***a* of the actuator wafer **100**. Specifically, a silicon oxide film (of, for example, 1.2 μm thickness) is formed on the front surface **100***a* of the actuator wafer **100**.

Next, the first hydrogen barrier film **8** is formed on the movable film formation layer **10**. The first hydrogen barrier film **8** is constituted, for example, of an Al_2O_3 film (of, for example, 50 nm to 100 nm thickness). The first hydrogen barrier film **8** prevents degradation of characteristics due to hydrogen reduction of the piezoelectric films **12** to be formed later. Also, the first hydrogen barrier film **8** prevents metal atoms from escaping from the piezoelectric films **12**. When the metal atoms escape, the piezoelectric properties of the piezoelectric films **12** may degrade. Also, when the escaped metal atoms become mixed into a silicon layer that constitutes the movable films **10**A, durability of the movable films **10**A may degrade.

Next, a lower electrode film **71** that is a material film of the lower electrodes **11** is formed on the first hydrogen barrier film **8**. The lower electrode film **71** is constituted, for example, of a Pt/Ti laminated film having a Ti film (of, for example, 10 nm to 40 nm thickness) as a lower layer and a Pt film (of, for example, 10 nm to 400 nm thickness) as an upper layer. Such a lower electrode film **71** may be formed by a sputtering method.

Next, a piezoelectric material film **72** that is a material of the piezoelectric films **12** is formed on an entire surface on the lower electrode film **71**. Specifically, for example, the piezoelectric material film **72** of 1 μm to 3 μm thickness is formed by sol-gel method. Such a piezoelectric material film **72** is constituted of a sintered body of metal oxide crystal grains.

Next, an upper electrode film **73** that is a material of the upper electrodes **13** is formed on an entire surface on the piezoelectric material film **72**. The upper electrode film **73** may, for example, be a single film of platinum (Pt). The upper electrode film **73** may instead be, for example, an IrO_2/Ir laminated film having an IrO_2 film (of, for example, 40 nm to 160 nm thickness) as a lower layer and an Ir film (of, for example, 40 nm to 160 nm thickness) as an upper layer. Such an upper electrode film **73** may be formed by a sputtering method.

Next, as shown in FIG. **11**B and FIG. **12**B, patterning of the upper electrode film **73**, the piezoelectric material film **72**, and the lower electrode film **71** is performed. First, a resist mask with a pattern of the upper electrodes **13** is formed by photolithography. By the upper electrode film **73** and the piezoelectric material film **72** then being etched continuously using the resist mask as a mask, the upper electrodes **13** and the piezoelectric films **12** of predetermined patterns are formed.

Next, after the resist mask is peeled off, a resist mask with a pattern of the lower electrodes **11** is formed by photolithography. By the lower electrode film **71** then being etched using the resist mask as a mask, the lower electrodes **11** of the predetermined pattern are formed. The lower electrodes **11**, each constituted of the main electrode portions **11**A and the extension portion **11**B, are thereby formed. The piezoelectric elements **9**, each constituted of the main electrode portion **11**A of the lower electrode **11**, the piezoelectric film **12**, and the upper electrode **13**, are thus formed.

Next, as shown in FIG. **11**C and FIG. **12**C, after the resist mask is peeled off, the second hydrogen barrier film **14** that covers an entire surface is formed. The second hydrogen barrier film **14** may be an Al_2O_3 film formed by a sputtering method and a film thickness thereof may be 50 nm to 100 nm. Thereafter, the insulating film **15** is formed on an entire surface on the second hydrogen barrier film **14**. The insulating film **15** may be an SiO_2 film and a film thickness thereof may be 200 nm to 300 nm. Subsequently, the insulating film **15** and the second hydrogen barrier film **14** are etched continuously to form the contact holes **31** and **32**.

Next, as shown in FIG. **11**D and FIG. **12**D, a wiring film that constitutes the upper wirings **17**, the fuses **20**, and the lower wirings **18** is formed by a sputtering method on the insulating film **15** including interiors of the contact holes **31** and **32**. Thereafter, by the wiring film being patterned by photolithography and etching, the upper wirings **17** (first wiring portions **17**A and second wiring portions **17**B), the fuses **20**, and the lower wirings **18** are formed at the same time.

Next, as shown in FIG. **11**E and FIG. **12**E, the passivation film **33** that covers the upper wirings **17**, the fuses **20**, and the lower wirings **18** is formed on a front surface of the insulating film **15**. The passivation film **33** is constituted, for example, of SiN. The passivation film **33** is formed, for example, by plasma CVD.

Next, a resist mask having openings corresponding to the pad openings **34** and **35** is formed by photolithography and the passivation film **33** is etched using the resist mask as a mask. The pad openings **34** and **35** are thereby formed in the passivation film **33** as shown in FIG. **11**F and FIG. **12**F. After the resist mask is peeled off, the upper electrode pads **42** and the lower electrode pads **43** are formed on the passivation film **33** respectively via the pad openings **34** and **35**.

Next, a resist mask having openings corresponding to the openings **36** and the ink supplying penetrating holes **44** is formed by photolithography and the passivation film **33** and the insulating film **15** are etched continuously using the resist mask as a mask. The openings **36** and the ink supply-

ing penetrating holes **44** are thereby formed in the passivation film **33** and the insulating film **15** as shown in FIG. **11**G and FIG. **12**G.

Next, the resist mask is peeled off. Then, a resist mask having openings corresponding to the ink supplying penetrating holes **44** is formed by photolithography and the second hydrogen barrier film **14**, the first hydrogen barrier film **8**, and the movable film formation layer **10** are etched using the resist mask as a mask. The ink supplying penetrating holes **44** are thereby formed in the second hydrogen barrier film **14**, the first hydrogen barrier film **8**, and the movable film formation layer **10** as shown in FIG. **11**H and FIG. **12**H. The substrate assembly set **110** is thereby prepared.

Next, as shown in FIG. **11**I and FIG. **12**I, the adhesive **50** is coated on the opposing surface **51** of the protective substrate set **130** and the protective substrate set **130** is fixed on the substrate assembly set **110** such that the ink supply passages **54** and the ink supplying penetrating holes **44** corresponding thereto are matched.

Next, as shown in FIG. **11**J and FIG. **12**J, rear surface grinding for thinning the actuator wafer **100** is performed. Film-thinning of the actuator wafer **100** is performed by the actuator wafer **100** being ground from a rear surface **100***b*. For example, the actuator wafer **100** of approximately 670 μm thickness in an initial state may be thinned to approximately 300 μm thickness. Thereafter, a resist mask having openings corresponding to the ink flow passages **5** (ink inflow portions **6** and pressure chambers **7**) and openings corresponding to the cavities **19** is formed by photolithography on the rear surface **100***b* side of the actuator wafer **100** and the actuator wafer **100** is etched from the rear surface **100***b* using the resist mask as a mask. The ink flow passages **5** (ink inflow portions **6** and pressure chambers **7**) and the cavities **19** are thereby formed in the actuator wafer **100**.

In this process of etching, the first hydrogen barrier film **8** formed on the front surface of the movable film formation layer **10** prevents metal elements (Pb, Zr, and Ti in the case of PZT) from escaping from the piezoelectric films **12** and keeps the piezoelectric properties of the piezoelectric film **12** satisfactory. Also, as mentioned above, the first hydrogen barrier film **8** contributes to maintenance of the durability of the silicon layers that form the movable films **10**A.

Thereafter, as shown in FIG. **11**K and FIG. **12**K, the nozzle substrate set **150** is bonded to the rear surface **100***b* of the actuator wafer **100**. The inkjet print head set **170** that is constituted of the substrate assembly set **110**, the protective substrate set **130**, and the nozzle substrate set **150** is thereby obtained. Thereafter, the inkjet print head set **170** is cut along the intended cutting lines **103** by a dicing blade. That is, a step for cutting out the inkjet print heads **1** individually is performed.

When this step is completed, the actuator wafer **100** in the substrate assembly set **110** becomes the actuator substrate **2** of each individual inkjet print head **1**. Also, the protective substrate set **130** becomes the protective substrate **4** of each individual inkjet print head **1**. Also, a nozzle wafer **140** in the nozzle substrate set **150** becomes a silicon substrate in the nozzle substrate **3** of each individual inkjet print head **1**. Individual pieces of the inkjet print heads **1**, each having the structure shown in FIG. **1** to FIG. **6**, are thereby obtained.

With each inkjet print head **1** thus obtained, side surfaces of the actuator substrate **2** and side surfaces of the nozzle substrate **3** are flush in all directions (flush across entire peripheries) in plan view. That is, with this preferred embodiment, the inkjet print head **1** with which there is no step between the actuator substrate **2** and the nozzle substrate **3** is obtained. Also, with this preferred embodiment, the side surfaces of the actuator substrate **2** and side surfaces of the protective substrate **4** are also flush in all directions (flush across entire peripheries) in plan view. That is, with this preferred embodiment, the inkjet print head **1** with which there is also no step between the actuator substrate **2** and the protective substrate **4** is obtained.

With the method for manufacturing an inkjet print head according to this preferred embodiment, the inkjet print head set **170** is prepared by the nozzle substrate set **150** being bonded to the substrate assembly set **110** with the protective substrate set **130** being fixed thereto. The inkjet print heads **1** are then cut out individually by the inkjet print head set **170** being diced. Therefore, in comparison to a case where, for example, an inkjet print head is manufactured by manufacturing each individual substrate assembly SA and thereafter bonding the nozzle substrate **3** individually to each individual substrate assembly SA, the inkjet print head **1** can be manufactured efficiently.

With the inkjet print head **1** according to this preferred embodiment, when dielectric breakdown occurs in one piezoelectric element **9**, an excessive current flows through the upper wiring **17** of that piezoelectric element **9**. However, since the fuse **20** is provided in an intermediate portion of the upper wiring **17**, the fuse **20** becomes heated and is cut by fusion. The excessive current can thereby be prevented from flowing continuously through the upper wiring **17** such that damage of the movable film due to Joule heat generated in the upper wiring **17** can be suppressed and leakage of ink can be suppressed. Thereby, degradation due to ink of the upper wirings **17** connected to other adjacent piezoelectric elements **9** can be suppressed and spreading of a fault range can be suppressed.

[2] Second Preferred Embodiment

FIG. **13** is a plan view of an inkjet print head according to a second preferred embodiment of the present disclosure and is a plan view corresponding to FIG. **1**. FIG. **14** is an illustrative partially enlarged plan view showing a portion C of FIG. **13** in enlarged manner and is a plan view including a protective substrate. FIG. **15** is an illustrative partially enlarged plan view showing the portion C of FIG. **13** in enlarged manner and is a plan view with the protective substrate omitted. FIG. **16**A is an illustrative sectional view of a region A of a sectional view taken along line A-A of FIG. **14**. FIG. **16**B is an illustrative sectional view of a region B of a sectional view taken along line B-B of FIG. **14**.

In FIG. **13**, portions corresponding to respective portions in FIG. **1** described above are indicated with the same reference signs attached as in FIG. **1**. In FIG. **14**, portions corresponding to respective portions in FIG. **2** described above are indicated with the same reference signs attached as in FIG. **2**. In FIG. **15**, portions corresponding to respective portions in FIG. **3** described above are indicated with the same reference signs attached as in FIG. **3**. In FIG. **16**A and FIG. **16**B, portions corresponding to respective portions in FIG. **4**A and FIG. **4**B described above are indicated with the same reference signs attached as in FIG. **4**A and FIG. **4**B.

In comparison to the inkjet print head **1** according to the first preferred embodiment, the inkjet print head **1**A according to the second preferred embodiment differs in the arrangement of the fuses **20**. Specifically, each fuse **20** is constituted of a conductor **21** constituted of an upper electrode **213** of a dummy piezoelectric element **209**, a first contact **22** connecting one end portion (first end portion) of the conductor **21** and the other end portion (second end

portion) of the first wiring portion **17**A of the upper wiring **17**, and a second contact **23** connecting another end portion (second end portion) of the conductor **21** and the one end portion (first end portion) of the second wiring portion **17**B of the upper wiring **17**.

The dummy piezoelectric element **209** is formed above the cavity **19** and on the first hydrogen barrier film **8**. Although the dummy piezoelectric element **209** has a similar structure as the piezoelectric element **9**, it does not operate as a piezoelectric element. The dummy piezoelectric element **209** is constituted of a lower electrode **211** formed on the first hydrogen barrier film **8**, a piezoelectric film **212** formed on the lower electrode **211**, and an upper electrode **213** formed on the piezoelectric film **212**. Although the upper wiring **17** is connected to the upper electrode **213**, a lower wiring is not connected to the lower electrode **211**.

In plan view, the lower electrode **211** is of a rectangular shape that is long in the long direction of the cavity **19** and both end edges are formed to outwardly projecting curved shapes. In plan view, a width in a short direction of the lower electrode **211** is substantially equal to the width in the short direction of the upper electrode **13** of the piezoelectric element **9**. In plan view, both side edges of the lower electrode **211** are receded further inward than corresponding both side edges of the cavity **19**. A length in a long direction of the lower electrode **211** is longer than the length in the long direction of the cavity **19**. In plan view, both end edges of the lower electrode **211** are advanced further outward than corresponding both end edges of the cavity **19**.

In plan view, the upper electrode **213** is of a rectangular shape that is long in the long direction of the cavity **19** and both end edges are formed to outwardly projecting curved shapes. A width in a short direction of the upper electrode **213** is shorter than the width in the short direction of the lower electrode **211**. In plan view, both side edges of the upper electrode **213** are receded further inward than corresponding both side edges of the lower electrode **211**. A length in a long direction of the upper electrode **213** is shorter than the length in the long direction of the cavity **19**. In plan view, both end edges of the upper electrode **213** are receded further inward than corresponding both end edges of the cavity **19**.

In plan view, the piezoelectric film **212** has the same pattern as the upper electrode **213**. In plan view, the piezoelectric film **212** is of a rectangular shape that is long in the long direction of the cavity **19** and both end edges are formed to outwardly projecting curved shapes. A width in a short direction of the piezoelectric film **212** is shorter than the width in the short direction of the lower electrode **211**. In plan view, both side edges of the piezoelectric film **212** are receded further inward than corresponding both side edges of the lower electrode **211**. A length in a long direction of the piezoelectric film **212** is shorter than the length in the long direction of the cavity **19**. In plan view, both end edges of the piezoelectric film **212** are receded further inward than corresponding both end edges of the cavity **19**.

A front surface and side surfaces of the upper electrode **213**, side surfaces of the piezoelectric film **212**, and a front surface and side surfaces of the lower electrode **211** of the dummy piezoelectric element **209** are covered by the second hydrogen barrier film **14**. The second hydrogen barrier film **14** is covered by the insulating film **15**.

The other end portion of the first wiring portion **17**A is disposed above one end portion (upstream side end portion in the ink flow direction **41**) of the upper electrode **213**. In this preferred embodiment, the width in the short direction of the upper electrode **213** is shorter than the width of the first wiring portion **17**A (upper wiring **17**). In plan view, both side edges of the one end portion of the upper electrode **213** are receded further inward than corresponding both side edges of the other end portion of the first wiring portion **17**A.

A contact hole **24** that penetrates continuously through the second hydrogen barrier film **14** and the insulating film **15** is formed between the first wiring portion **17**A and the upper electrode **213**. The first contact **22** that connects the other end portion of the first wiring portion **17**A and the one end portion of the upper electrode **213** (conductor **21**) is embedded in the contact hole **24**. The first contact **22** is formed integral to the first wiring portion **17**A.

The one end portion of the second wiring portion **17**B is disposed above another end portion of the upper electrode **213**. In this preferred embodiment, the width in the short direction of the upper electrode **213** is shorter than a width of the second wiring portion **17**B (upper wiring **17**). In plan view, both side edges of the other end portion of the upper electrode **213** are receded further inward than corresponding both side edges of the one end portion of the second wiring portion **17**B.

A contact hole **25** that penetrates continuously through the second hydrogen barrier film **14** and the insulating film **15** is formed between the second wiring portion **17**B and the upper electrode **213**. The second contact **23** that connects the one end portion of the second wiring portion **17**B and the other end portion of the upper electrode **213** (conductor **21**) is embedded in the contact hole **25**. The second contact **23** is formed integral to the second wiring portion **17**B. A transverse cross-sectional area of at least one of the first contact **22** and the second contact **23** is preferably smaller than a transverse cross-sectional area of an upper wiring portion (upper contact) inside the contact hole **31**. In this preferred embodiment, the transverse cross-sectional areas of the first contact **22** and the second contact **23** are smaller than the transverse cross-sectional area of the upper wiring portion inside the contact hole **31**.

In an inner region of each second recess **53** of the protective substrate **4**, the insulating film **15** and the passivation film **33** are formed at one end portion at which the first wiring portion **17**A is present and another end portion at which the second wiring portion **17**B is present but are not formed in a lengthwise central portion. In the inner region of the second recess **53**, the passivation film **33** is formed such as to cover an upper surface and side surfaces of the first wiring portion **17**A on the insulating film **15** and an upper surface and side surfaces of the second wiring portion **17**B on the insulating film **15**. In other words, in the insulating film **15** and the passivation film **33**, an opening **26** is formed in a region in the inner region of the second recess **53** that excludes the upper wiring region in plan view. The contact holes **24** and **25** are further formed in the insulating film **15**.

The same effects as the first preferred embodiment are also obtained with the second preferred embodiment.

Here, if, as with the conductor **21** (upper electrode **213**) described above, the width in the short direction of the conductor **21** is shorter than the width of the upper wiring **17** and the conductor **21** has a property of being more likely to be cut by fusion than the upper wiring **17**, the transverse cross-sectional areas of the first contact **22** and the second contact **23** may be not less than the transverse cross-sectional area of the upper wiring portion inside the contact hole **31**.

Also, if the transverse cross-sectional area of at least one of the first contact **22** and the second contact **23** is smaller than the transverse cross-sectional area of the upper wiring portion inside the contact hole **31** and at least one of the first

contact **22** and the second contact **23** has a property of being more likely to be cut by fusion than the upper wiring **17**, the width in the short direction of the upper electrode **213** (conductor **21**) may be not less than the width of the upper wiring **17**.

A method for manufacturing the inkjet print head **1**A shall be described specifically below.

FIG. **17**A to FIG. **17**J and FIG. **18**A to FIG. **18**J are sectional views showing a manufacturing process of the inkjet print head **1**A. FIG. **17**A to FIG. **17**J are sectional views corresponding to the section plane of FIG. **16**A and FIG. **18**A to FIG. **18**J are sectional views corresponding to the section plane of FIG. **16**B.

First, after the same step as that of FIG. **11**A and FIG. **12**A described above has been performed, patterning of the upper electrode film **73**, the piezoelectric material film **72**, and the lower electrode film **71** is performed as shown in FIG. **17**A and FIG. **18**A. First, a resist mask with patterns of the upper electrodes **13** and **213** is formed by photolithography. By the upper electrode film **73** and the piezoelectric material film **72** then being etched continuously using the resist mask as a mask, the upper electrodes **13** and **233** and the piezoelectric films **12** and **212** of predetermined patterns are formed.

Next, after the resist mask is peeled off, a resist mask with patterns of the lower electrodes **11** and **211** is formed by photolithography. By the lower electrode film **71** then being etched using the resist mask as a mask, the lower electrodes **11** and **211** of the predetermined patterns are formed.

The lower electrodes **11** are each constituted of the main electrode portions **11**A and the extension portion **11**B. The piezoelectric elements **9**, each constituted of the main electrode portion **11**A of the lower electrode **11**, the piezoelectric film **12**, and the upper electrode **13**, are thus formed. Also, the dummy piezoelectric elements **209**, each constituted of the lower electrode **211**, the piezoelectric film **212**, and the upper electrode **213**, are thus formed. The upper electrode **213** constitutes the conductor **21** of the fuse **20**.

Next, as shown in FIG. **17**B and FIG. **18**B, after the resist mask is peeled off, the second hydrogen barrier film **14** that covers the entire surface is formed. Thereafter, the insulating film **15** is formed on the entire surface on the second hydrogen barrier film **14**. Subsequently, the insulating film **15** and the second hydrogen barrier film **14** are etched continuously to form the contact holes **31**, **32**, **24**, and **25**.

Next, as shown in FIG. **17**C and FIG. **18**C, a wiring film is formed by a sputtering method on the insulating film **15** including interiors of the contact holes **31**, **32**, **24**, and **25**. Thereafter, by the wiring film being patterned by photolithography and etching, the upper wirings **17** (first wiring portions **17**A and second wiring portions **17**B), the first contacts **22** and the second contacts **23** of the fuses **20**, and the lower wirings **18** are formed at the same time. The fuses **20**, each constituted of the conductor **21** (upper electrode **213**), the first contact **22**, and the second contact **23**, are thereby obtained.

Next, as shown in FIG. **17**D and FIG. **18**D, the passivation film **33** that covers the upper wirings **17** and the lower wirings **18** is formed on the front surface of the insulating film **15**.

Next, a resist mask having openings corresponding to the pad openings **34** and **35** is formed by photolithography and the passivation film **33** is etched using the resist mask as a mask. The pad openings **34** and **35** are thereby formed in the passivation film **33** as shown in FIG. **17**E and FIG. **18**E. After the resist mask is peeled off, the upper electrode pads **42** and the lower electrode pads **43** are formed on the passivation film **33** respectively via the pad openings **34** and **35**.

Next, a resist mask having openings corresponding to the openings **36** and **26** and the ink supplying penetrating holes **44** is formed by photolithography and the passivation film **33** and the insulating film **15** are etched continuously using the resist mask as a mask. The openings **36** and **26** and the ink supplying penetrating holes **44** are thereby formed in the passivation film **33** and the insulating film **15** as shown in FIG. **17**F and FIG. **18**F.

Next, the resist mask is peeled off. Then, a resist mask having openings corresponding to the ink supplying penetrating holes **44** is formed by photolithography and the second hydrogen barrier film **14**, the first hydrogen barrier film **8**, and the movable film formation layer **10** are etched using the resist mask as a mask. The ink supplying penetrating holes **44** are thereby formed in the second hydrogen barrier film **14**, the first hydrogen barrier film **8**, and the movable film formation layer **10** as shown in FIG. **17**G and FIG. **18**G. The substrate assembly set **110** is thereby prepared.

Next, as shown in FIG. **17**H and FIG. **18**H, the adhesive **50** is coated on the opposing surface **51** of the protective substrate set **130** and the protective substrate set **130** is fixed on the substrate assembly set **110** such that the ink supply passages **54** and the ink supplying penetrating holes **44** corresponding thereto are matched.

Next, as shown in FIG. **17**I and FIG. **18**I, rear surface grinding for thinning the actuator wafer **100** is performed. Film-thinning of the actuator wafer **100** is performed by the actuator wafer **100** being ground from the rear surface **100***b*. Thereafter, a resist mask having openings corresponding to the ink flow passages **5** (ink inflow portions **6** and pressure chambers **7**) and openings corresponding to the cavities **19** is formed by photolithography on the rear surface **100***b* side of the actuator wafer **100** and the actuator wafer **100** is etched from the rear surface **100***b* using the resist mask as a mask. The ink flow passages **5** (ink inflow portions **6** and pressure chambers **7**) and the cavities **19** are thereby formed in the actuator wafer **100**.

Thereafter, as shown in FIG. **17**J and FIG. **18**J, the nozzle substrate set **150** is bonded to the rear surface **100***b* of the actuator wafer **100**. The inkjet print head set **170** that is constituted of the substrate assembly set **110**, the protective substrate set **130**, and the nozzle substrate set **150** is thereby obtained. Thereafter, the inkjet print head set **170** is cut along the intended cutting lines **103** by a dicing blade. That is, a step for cutting out the inkjet print heads **1**A individually is performed.

When this step is completed, the actuator wafer **100** in the substrate assembly set **110** becomes the actuator substrate **2** of each individual inkjet print head **1**A. Also, the protective substrate set **130** becomes the protective substrate **4** of each individual inkjet print head **1**A. Also, the nozzle wafer **140** in the nozzle substrate set **150** becomes the silicon substrate in the nozzle substrate **3** of each individual inkjet print head **1**A. Individual pieces of the inkjet print heads **1**A, each having the structure shown in FIG. **13** to FIG. **16**B, are thereby obtained.

[3] Third Preferred Embodiment

FIG. **19** is a plan view of an inkjet print head according to a third preferred embodiment of the present disclosure and is a plan view corresponding to FIG. **1**. FIG. **20** is an illustrative partially enlarged plan view showing a portion C

of FIG. **19** in enlarged manner and is a plan view including a protective substrate. FIG. **21** is an illustrative partially enlarged plan view showing the portion C of FIG. **19** in enlarged manner and is a plan view with the protective substrate omitted. FIG. **22**A is an illustrative sectional view taken along line A-A of FIG. **20**. FIG. **22**B is an illustrative sectional view taken along line B-B of FIG. **20**.

In FIG. **19**, portions corresponding to respective portions in FIG. **1** described above are indicated with the same reference signs attached as in FIG. **1**. In FIG. **20**, portions corresponding to respective portions in FIG. **2** described above are indicated with the same reference signs attached as in FIG. **2**. In FIG. **21**, portions corresponding to respective portions in FIG. **3** described above are indicated with the same reference signs attached as in FIG. **3**. In FIG. **22**A and FIG. **22**B, portions corresponding to respective portions in FIG. **4**A and FIG. **4**B described above are indicated with the same reference signs attached as in FIG. **4**A and FIG. **4**B.

In comparison to the inkjet print head **1** according to the first preferred embodiment, the inkjet print head **1**B according to the third preferred embodiment differs in the arrangement of the fuses **20**. Specifically, each fuse **20** is constituted of the conductor **21** formed on the first hydrogen barrier film **8** and constituted of the same material as the lower electrode **11**, the first contact **22** connecting the one end portion (first end portion) of the conductor **21** and the other end portion (second end portion) of the first wiring portion **17**A of the upper wiring **17**, and the second contact **23** connecting the other end portion (second end portion) of the conductor **21** and the one end portion (first end portion) of the second wiring portion **17**B of the upper wiring **17**.

In plan view, the conductor **21** is of a rectangular shape that is long in the ink flow direction **41** and both end edges are formed to outwardly projecting curved shapes. In plan view, the conductor **21** is disposed at an inner side of the cavity **19**. In plan view, the width in the short direction of the conductor **21** is shorter than the width in the short direction of the cavity **19**. In plan view, both side edges of the conductor **21** are receded further inward than corresponding both side edges of the cavity **19**. A length in a long direction of the conductor **21** is shorter than the length in the long direction of the cavity **19**. In plan view, both end edges of the conductor **21** are receded further inward than corresponding both end edges of the cavity **19**.

A front surface and side surfaces of the conductor **21** are covered by the second hydrogen barrier film **14**. The second hydrogen barrier film **14** is covered by the insulating film **15**.

The other end portion of the first wiring portion **17**A is disposed above the one end portion (upstream side end portion in the ink flow direction **41**) of the conductor **21**. In this preferred embodiment, the width in the short direction of the conductor **21** is shorter than the width of the first wiring portion **17**A (upper wiring **17**). In plan view, both side edges of the one end portion of the conductor **21** are receded further inward than corresponding both side edges of the other end portion of the first wiring portion **17**A.

The contact hole **24** that penetrates continuously through the second hydrogen barrier film **14** and the insulating film **15** is formed between the first wiring portion **17**A and the conductor **21**. The first contact **22** that connects the other end portion of the first wiring portion **17**A and the one end portion of the conductor **21** is embedded in the contact hole **24**. The first contact **22** is formed integral to the first wiring portion **17**A.

The one end portion of the second wiring portion **17**B is disposed above the other end portion of the conductor **21**. In this preferred embodiment, the width in the short direction of the conductor **21** is shorter than the width of the second wiring portion **17**B (upper wiring **17**). In plan view, both side edges of the other end portion of the conductor **21** are receded further inward than corresponding both side edges of the one end portion of the second wiring portion **17**B.

The contact hole **25** that penetrates continuously through the second hydrogen barrier film **14** and the insulating film **15** is formed between the second wiring portion **17**B and the conductor **21**. The second contact **23** that connects the one end portion of the second wiring portion **17**B and the other end portion of the conductor **21** is embedded in the contact hole **25**. The second contact **23** is formed integral to the second wiring portion **17**B. The transverse cross-sectional area of at least one of the first contact **22** and the second contact **23** is preferably smaller than the transverse cross-sectional area of the upper wiring portion (upper contact) inside the contact hole **31**. In this preferred embodiment, the transverse cross-sectional areas of the first contact **22** and the second contact **23** are smaller than the transverse cross-sectional area of the upper wiring portion inside the contact hole **31**.

The same effects as the first preferred embodiment are also obtained with the third preferred embodiment.

Here, if, as with the conductor **21** described above, the width in the short direction of the conductor **21** is shorter than the width of the upper wiring **17** and the conductor **21** has the property of being more likely to be cut by fusion than the upper wiring **17**, the transverse cross-sectional areas of the first contact **22** and the second contact **23** may be not less than the transverse cross-sectional area of the upper wiring portion inside the contact hole **31**.

Also, if the transverse cross-sectional area of at least one of the first contact **22** and the second contact **23** is smaller than the transverse cross-sectional area of the upper wiring portion inside the contact hole **31** and at least one of the first contact **22** and the second contact **23** has the property of being more likely to be cut by fusion than the upper wiring **17**, the width in the short direction of the conductor **21** may be not less than the width of the upper wiring **17**.

A method for manufacturing the inkjet print head **1**B shall be described specifically below.

FIG. **23**A to FIG. **23**J and FIG. **24**A to FIG. **24**J are sectional views showing a manufacturing process of the inkjet print head **1**B. FIG. **23**A to FIG. **23**J are sectional views corresponding to the section plane of FIG. **22**A and FIG. **24**A to FIG. **24**J are sectional views corresponding to the section plane of FIG. **22**B.

First, after the same step as that of FIG. **11**A and FIG. **12**A described above has been performed, patterning of the upper electrode film **73**, the piezoelectric material film **72**, and the lower electrode film **71** is performed as shown in FIG. **23**A and FIG. **24**A. First, a resist mask with a pattern of the upper electrodes **13** is formed by photolithography. By the upper electrode film **73** and the piezoelectric material film **72** then being etched continuously using the resist mask as a mask, the upper electrodes **13** and the piezoelectric films **12** of predetermined patterns are formed.

Next, after the resist mask is peeled off, a resist mask with patterns of the lower electrodes **11** and the conductors **21** is formed by photolithography. By the lower electrode film **71** then being etched using the resist mask as a mask, the lower electrodes **11** and the conductors **21** of the predetermined patterns are formed.

The lower electrodes **11** are each constituted of the main electrode portions **11**A and the extension portion **11**B. The piezoelectric elements **9**, each constituted of the main elec-

trode portion **11**A of the lower electrode **11**, the piezoelectric film **12**, and the upper electrode **13**, are thus formed.

Next, as shown in FIG. **23**B and FIG. **24**B, after the resist mask is peeled off, the second hydrogen barrier film **14** that covers the entire surface is formed. Thereafter, the insulating film **15** is formed on the entire surface on the second hydrogen barrier film **14**. Subsequently, the insulating film **15** and the second hydrogen barrier film **14** are etched continuously to form the contact holes **31**, **32**, **24**, and **25**.

Next, as shown in FIG. **23**C and FIG. **24**C, a wiring film is formed by a sputtering method on the insulating film **15** including interiors of the contact holes **31**, **32**, **24**, and **25**. Thereafter, by the wiring film being patterned by photolithography and etching, the upper wirings **17** (first wiring portions **17**A and second wiring portions **17**B), the first contacts **22** and the second contacts **23** of the fuses **20**, and the lower wirings **18** are formed at the same time. The fuses **20**, each constituted of the conductor **21**, the first contact **22**, and the second contact **23**, are thereby obtained.

Next, as shown in FIG. **23**D and FIG. **24**D, the passivation film **33** that covers the upper wirings **17** and the lower wirings **18** is formed on the front surface of the insulating film **15**.

Next, a resist mask having openings corresponding to the pad openings **34** and **35** is formed by photolithography and the passivation film **33** is etched using the resist mask as a mask. The pad openings **34** and **35** are thereby formed in the passivation film **33** as shown in FIG. **23**E and FIG. **24**E. After the resist mask is peeled off, the upper electrode pads **42** and the lower electrode pads **43** are formed on the passivation film **33** respectively via the pad openings **34** and **35**.

Next, a resist mask having openings corresponding to the openings **36** and the ink supplying penetrating holes **44** is formed by photolithography and the passivation film **33** and the insulating film **15** are etched continuously using the resist mask as a mask. The openings **36** and the ink supplying penetrating holes **44** are thereby formed in the passivation film **33** and the insulating film **15** as shown in FIG. **23**F and FIG. **24**F.

Next, the resist mask is peeled off. Then, a resist mask having openings corresponding to the ink supplying penetrating holes **44** is formed by photolithography and the second hydrogen barrier film **14**, the first hydrogen barrier film **8**, and the movable film formation layer **10** are etched using the resist mask as a mask. The ink supplying penetrating holes **44** are thereby formed in the second hydrogen barrier film **14**, the first hydrogen barrier film **8**, and the movable film formation layer **10** as shown in FIG. **23**G and FIG. **24**G. The substrate assembly set **110** is thereby prepared.

Next, as shown in FIG. **23**H and FIG. **24**H, the adhesive **50** is coated on the opposing surface **51** of the protective substrate set **130** and the protective substrate set **130** is fixed on the substrate assembly set **110** such that the ink supply passages **54** and the ink supplying penetrating holes **44** corresponding thereto are matched.

Next, as shown in FIG. **23**I and FIG. **24**I, rear surface grinding for thinning the actuator wafer **100** is performed. Film-thinning of the actuator wafer **100** is performed by the actuator wafer **100** being ground from the rear surface **100***b*. Thereafter, a resist mask having openings corresponding to the ink flow passages **5** (ink inflow portions **6** and pressure chambers **7**) and openings corresponding to the cavities **19** is formed by photolithography on the rear surface **100***b* side of the actuator wafer **100** and the actuator wafer **100** is etched from the rear surface **100***b* using the resist mask as a mask. The ink flow passages **5** (ink inflow portions **6** and pressure chambers **7**) and the cavities **19** are thereby formed in the actuator wafer **100**.

Thereafter, as shown in FIG. **23**J and FIG. **24**J, the nozzle substrate set **150** is bonded to the rear surface **100***b* of the actuator wafer **100**. The inkjet print head set **170** that is constituted of the substrate assembly set **110**, the protective substrate set **130**, and the nozzle substrate set **150** is thereby obtained. Thereafter, the inkjet print head set **170** is cut along the intended cutting lines **103** by a dicing blade. That is, a step for cutting out the inkjet print heads **1**B individually is performed.

When this step is completed, the actuator wafer **100** in the substrate assembly set **110** becomes the actuator substrate **2** of each individual inkjet print head **1**B. Also, the protective substrate set **130** becomes the protective substrate **4** of each individual inkjet print head **1**B. Also, the nozzle wafer **140** in the nozzle substrate set **150** becomes the silicon substrate in the nozzle substrate **3** of each individual inkjet print head **1**B. Individual pieces of the inkjet print heads **1**B, each having the structure shown in FIG. **19** to FIG. **22**B, are thereby obtained.

Although the preferred embodiments of the present disclosure have been described above, the present disclosure may be implemented in yet other preferred embodiments. Although in each of the preferred embodiments described above, the actuator substrate **2** is provided with two of the piezoelectric element columns (pressure chamber columns), just one of the piezoelectric element columns (pressure chamber column) may be provided or three or more thereof may be provided instead.

Also, although with each of the preferred embodiments described above, PZT was cited as an example of the material of the piezoelectric film, a piezoelectric material besides this that is constituted of a metal oxide as represented by lead titanate ($PbPO_3$), potassium niobate ($KNbO_3$), lithium niobate ($LiNbO_3$), lithium tantalate ($LiTaO_3$), etc., may be applied instead.

Also, the upper wiring pattern is not restricted to the pattern described above. For example, the upper wiring pattern may be a pattern such that upper wirings pass between piezoelectric elements that are adjacent in the front/rear direction.

Also, a lower wiring may be provided according to each piezoelectric element. In this case, instead of providing the fuse **20** in the intermediate portion of each upper wiring **17**, a fuse may be provided in an intermediate portion of each lower wiring.

While preferred embodiments of the present disclosure were described in detail above, these are merely specific examples used to clarify the technical contents of the present disclosure and the present disclosure should not be interpreted as being limited to these specific examples and the scope of the present disclosure is limited only by the appended claims.

The present application corresponds to Japanese Patent Application No. 2020-193728 filed on Nov. 20, 2020 in the Japan Patent Office, and the entire disclosure of this application is incorporated herein by reference.

REFERENCE SIGNS LIST

1, **1**A, **1**B inkjet print head
2 actuator substrate
2*a* front surface
2*b* rear surface
3 nozzle substrate

3*a* nozzle hole
3*b* ink discharge port
4 protective substrate
5 ink flow passage
6 ink inflow portion
7 pressure chamber (cavity)
8 first hydrogen barrier film
9 piezoelectric element
10 movable film formation layer
10A movable film
11 lower electrode
11A main electrode portion
11B extension portion
12 piezoelectric film
13 upper electrode
14 second hydrogen barrier film
15 insulating film
17 upper wiring
18 lower wiring
19 cavity
20 fuse
21 conductor
22 first contact
23 second contact
24 contact hole
25 contact hole
26 opening
31 contact hole (upper wiring)
32 contact hole (lower wiring)
33 passivation film
34 pad opening (upper wiring)
35 pad opening (lower wiring)
36 opening (insulating film and passivation film)
41 ink flow direction
42 upper electrode pad
43 lower electrode pad
44 ink supplying penetrating hole
50 adhesive
51 opposing surface
52 first recess
53 second recess
54 ink supply passage
55 opening portion
61 first rectangular region
62 second rectangular region
71 lower electrode film
72 piezoelectric material film
73 upper electrode film
100 actuator wafer
100*a* front surface
100*b* rear surface
101 functional element formation region
102 scribe region
103 intended cutting line
110 substrate assembly set
130 protective substrate set
140 nozzle wafer
150 nozzle substrate set
170 inkjet print head set
209 dummy piezoelectric element
211 lower electrode
212 piezoelectric film
213 upper electrode
SA substrate assembly

The invention claimed is:

1. An inkjet print head comprising:
an actuator substrate that has an ink flow passage including a pressure chamber;
a movable film formation layer that includes a movable film disposed on the pressure chamber and demarcating a top surface portion of the pressure chamber;
a piezoelectric element that includes a lower electrode disposed on the movable film, a piezoelectric film formed on the lower electrode, and an upper electrode formed on the piezoelectric film;
a hydrogen barrier film that covers at least entire side surfaces of the upper electrode and the piezoelectric film among surfaces of the piezoelectric element;
an interlayer insulating film that is formed on the movable film formation layer such as to cover the hydrogen barrier film; and
a wiring that is formed on the interlayer insulating film and is connected to the piezoelectric element,
wherein a fuse is inserted in an intermediate portion of the wiring,
wherein the fuse is constituted of a conductor constituted of the same material as the lower electrode and being less in width than the wiring,
wherein the interlayer insulating film is interposed between the wiring and the fuse,
wherein the wiring has a first wiring portion and a second wiring portion that are electrically connected via the fuse; wherein further
the first wiring portion has a first end portion that is connected to the piezoelectric element and a second end portion that is connected to the fuse,
the second wiring portion has a first end portion that is connected to the fuse and a second end portion at an opposite side thereof, and
the fuse is arranged from a conductor, a first contact that penetrates the interlayer insulating film and connects the second end portion of the first wiring portion and a first end portion of the conductor, and a second contact that penetrates the interlayer insulating film and connects the first end portion of the second wiring portion and a second end portion at an opposite side to the first end portion of the conductor.

2. The inkjet print head according to claim **1**, wherein the actuator substrate has a cavity below the fuse.

3. The inkjet print head according to claim **1**, further comprising:
a passivation film that is formed on the interlayer insulating film and covers the wiring.

4. The inkjet print head according to claim **1**, further comprising:
a plurality of the pressure chambers, wherein
the piezoelectric element is provided according to each of the pressure chambers; and
in the actuator substrate, a plurality of pressure chamber columns, each constituted of a plurality of the pressure chambers that are disposed at intervals in a predetermined first direction, are formed at intervals in a second direction orthogonal to the first direction in plan view.

5. The inkjet print head according to claim **1**, further comprising:
a protective substrate disposed on the actuator substrate such as to cover the piezoelectric element and the fuse,
wherein the protective substrate has a first cavity above the fuse, and

in plan view, the first cavity is larger than the fuse and the fuse is placed inside the first cavity, and

wherein further the actuator substrate has a second cavity below the fuse, and

in plan view, the second cavity is larger than the fuse and the fuse is placed inside the second cavity.

6. An inkjet print head, comprising:

an actuator substrate that has an ink flow passage including a pressure chamber;

a movable film formation layer that includes a movable film disposed on the pressure chamber and demarcating a top surface portion of the pressure chamber;

a piezoelectric element that includes a lower electrode disposed on the movable film, a piezoelectric film formed on the lower electrode, and an upper electrode formed on the piezoelectric film;

a hydrogen barrier film that covers at least entire side surfaces of the upper electrode and the piezoelectric film among surfaces of the piezoelectric element;

an interlayer insulating film that is formed on the movable film formation layer such as to cover the hydrogen barrier film; and

a wiring that is formed on the interlayer insulating film and is connected to the piezoelectric element;

wherein a fuse is inserted in an intermediate portion of the wiring,

wherein the wiring has a first wiring portion and a second wiring portion that are electrically connected via the fuse, wherein further

the first wiring portion has a first end portion that is connected to the piezoelectric element and a second end portion that is connected to the fuse;

the second wiring portion has a first end portion that is connected to the fuse and a second end portion at an opposite side thereof; and

the fuse is arranged from a conductor, a first contact that connects the second end portion of the first wiring portion and a first end portion of the conductor and a second contact that connects the first end portion of the second wiring portion and a second end portion at an opposite side to the first end portion of the conductor,

the wiring is an upper wiring with one end connected to the upper electrode of the piezoelectric element,

a dummy piezoelectric element that is of the same structure as the piezoelectric element but does not operate as a piezoelectric element is formed on the movable film formation layer, and

the conductor is an upper electrode of the dummy piezoelectric element.

7. The inkjet print head according to claim **6**, wherein the hydrogen barrier film and the interlayer insulating film cover a surface of the dummy piezoelectric element.

8. The inkjet print head according to claim **7**, wherein

the hydrogen barrier film and the interlayer insulating film are formed at least on a portion of an upper surface of the upper electrode of the piezoelectric element;

an upper contact hole that exposes a portion of the upper surface of the upper electrode of the piezoelectric element is formed in the hydrogen barrier film and the interlayer insulating film formed on the upper surface of the upper electrode of the piezoelectric element, the first end portion of the first wiring portion enters into the upper contact hole and is connected to the upper electrode inside the upper contact hole;

a first contact hole that exposes a portion of the first end portion of the conductor and a second contact hole that exposes a portion of the second end portion of the conductor are formed in the hydrogen barrier film and the interlayer insulating film formed on the upper surface of the conductor constituted of the upper electrode of the dummy piezoelectric element;

the first contact connects the second end portion of the first wiring portion and the first end portion of the conductor via the first contact hole; and

the second contact connects the first end portion of the second wiring portion and the second end portion of the conductor via the second contact hole.

9. The inkjet print head according to claim **8**, wherein, if a portion of the first wiring portion that is connected to the upper electrode via the upper contact hole is an upper contact, a transverse cross-sectional area of at least one of the first contact and the second contact is less than a transverse cross-sectional area of the upper contact.

10. The inkjet print head according to claim **6**, wherein a width of the conductor is less than a width of the upper wiring.

11. The inkjet print head according to claim **10**, wherein the hydrogen barrier film and the interlayer insulating film cover a surface of the conductor.

12. The inkjet print head according to claim **11**, wherein

the hydrogen barrier film and the interlayer insulating film are formed at least on a portion of an upper surface of the upper electrode of the piezoelectric element;

an upper contact hole that exposes a portion of the upper surface of the upper electrode of the piezoelectric element is formed in the hydrogen barrier film and the interlayer insulating film formed on the upper surface of the upper electrode of the piezoelectric element, the first end portion of the first wiring portion enters into the upper contact hole and is connected to the upper electrode inside the upper contact hole;

a first contact hole that exposes a portion of the first end portion of the conductor and a second contact hole that exposes a portion of the second end portion of the conductor are formed in the hydrogen barrier film and the interlayer insulating film formed on the upper surface of the conductor;

the first contact connects the second end portion of the first wiring portion and the first end portion of the conductor via the first contact hole; and

the second contact connects the first end portion of the second wiring portion and the second end portion of the conductor via the second contact hole.

13. The inkjet print head according to claim **12**, wherein, if a portion of the first wiring portion that is connected to the upper electrode via the upper contact hole is an upper contact, a transverse cross-sectional area of at least one of the first contact and the second contact is less than a transverse cross-sectional area of the upper contact.

* * * * *