US 20250287822A1

(19) United States
(12) Patent Application Publication
FUKUOKA
(10) Pub. No.: US 2025/0287822 A1
(43) Pub. Date: Sep. 11, 2025

(54) **SELF-LUMINOUS DISPLAY PANEL HAVING DIFFERENT OPTICAL DISTANCES BETWEEN LIGHT-SHIELDING FILM AND LIGHT EMISSION REFERENCE POINTS DEPENDING ON LIGHT EMISSION COLOR**

(71) Applicant: **JDI Design and Development G.K.**, Tokyo (JP)

(72) Inventor: **Kenta FUKUOKA**, Tokyo (JP)

(73) Assignee: **JDI Design and Development G.K.**, Tokyo (JP)

(21) Appl. No.: **19/216,819**

(22) Filed: **May 23, 2025**

Related U.S. Application Data

(63) Continuation of application No. 18/509,720, filed on Nov. 15, 2023, now Pat. No. 12,342,704, which is a continuation of application No. 17/061,598, filed on Oct. 2, 2020, now Pat. No. 11,864,443.

(30) **Foreign Application Priority Data**

Oct. 4, 2019 (JP) 2019-184108
Aug. 31, 2020 (JP) 2020-145856

Publication Classification

(51) **Int. Cl.**

H10K 59/80	(2023.01)
H10K 50/852	(2023.01)
H10K 50/86	(2023.01)
H10K 59/12	(2023.01)
H10K 59/131	(2023.01)
H10K 59/35	(2023.01)
H10K 59/38	(2023.01)
H10K 71/00	(2023.01)

(52) **U.S. Cl.**

CPC ***H10K 59/8792*** (2023.02); ***H10K 50/852*** (2023.02); ***H10K 50/865*** (2023.02); ***H10K 59/352*** (2023.02); ***H10K 71/00*** (2023.02); *H10K 59/12* (2023.02); *H10K 59/131* (2023.02); *H10K 59/38* (2023.02); *H10K 59/876* (2023.02)

(57) **ABSTRACT**

A self-luminous display panel in which pixels composed of sub-pixels are arranged, including light-emitting elements and a light-shielding film. The light-emitting elements correspond one-to-one with the sub-pixels, each sub-pixel in a pixel emitting a different color of light. The light-shielding film is provided with openings at positions corresponding to the light-emitting elements in plan view, downstream in a light emission direction of the light-emitting elements. Optical distances between the light-shielding film and light emission reference points of the light-emitting elements are different, depending on light emission color of the light-emitting elements.

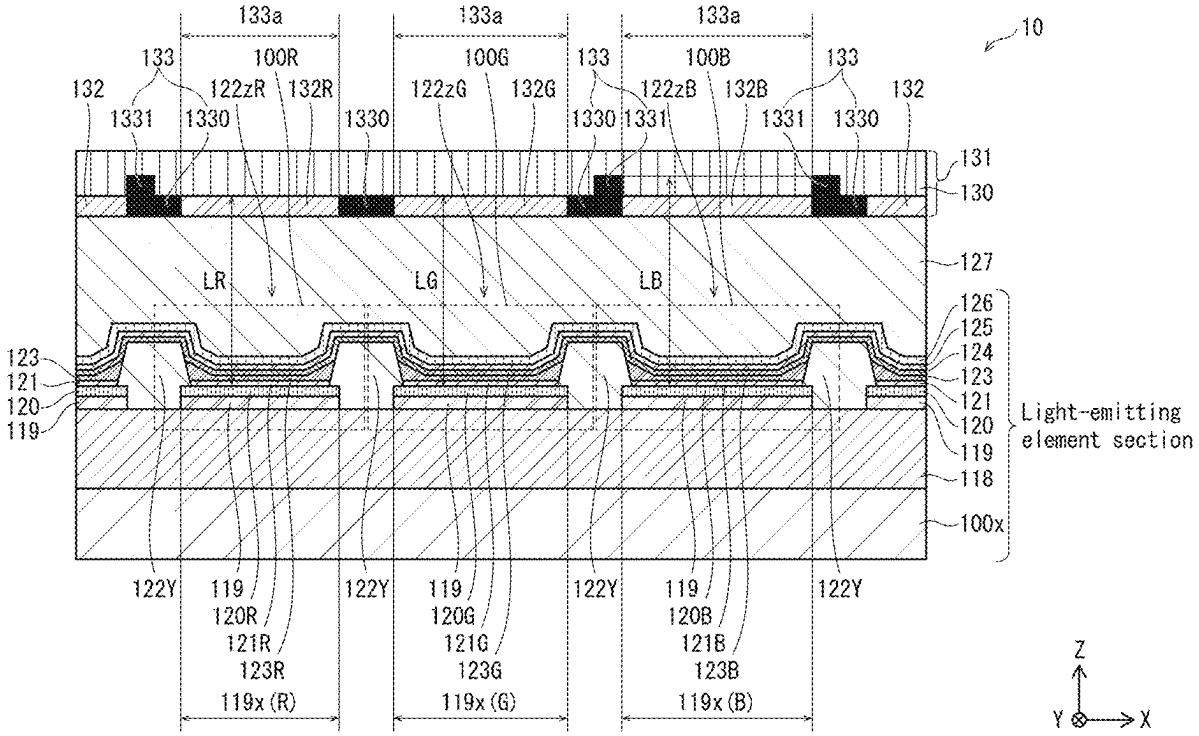

FIG. 1

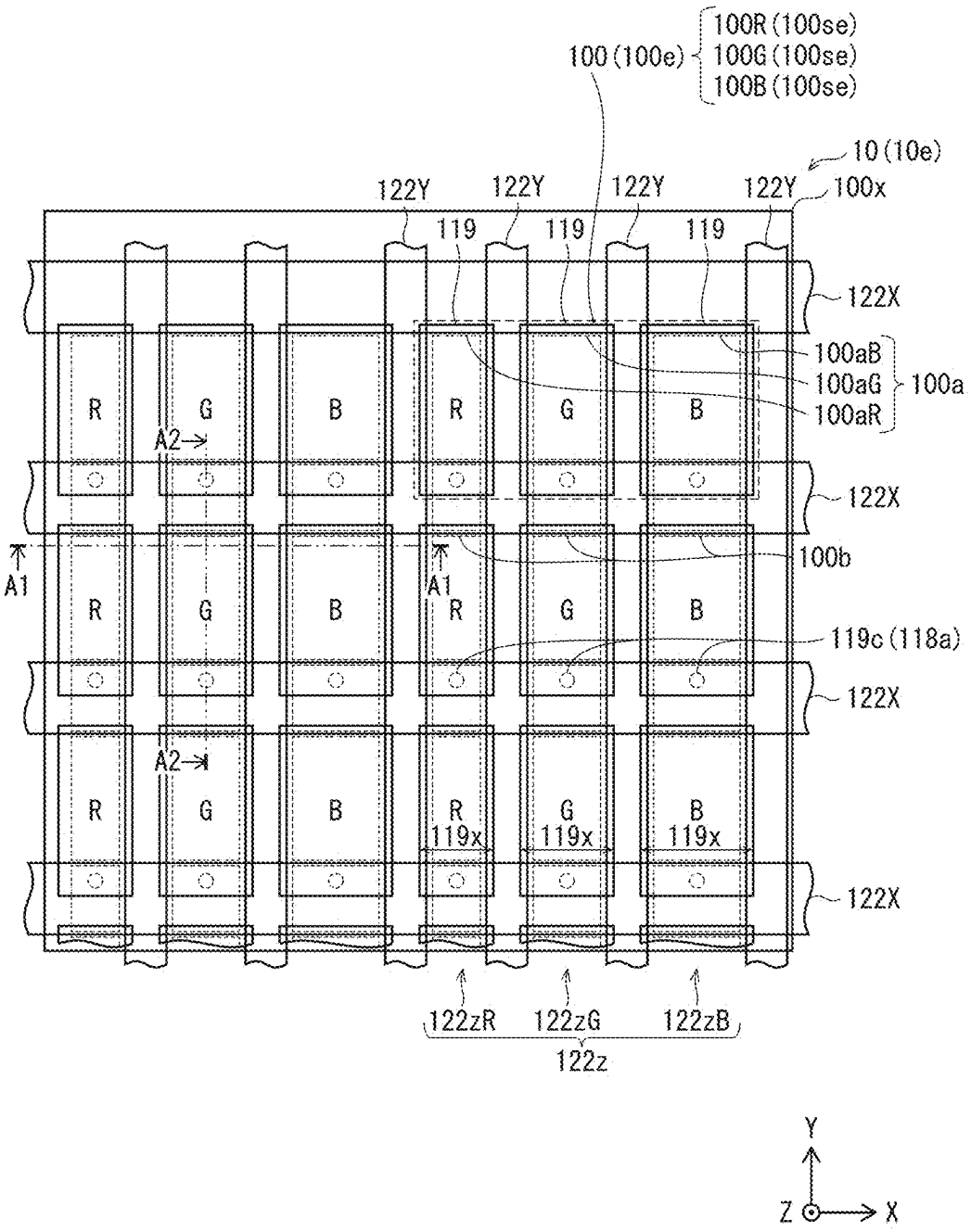
100 (100e)
100R (100se)
100G (100se)
100B (100se)
10 (10e)
100x
122Y
122Y
122Y
122Y
119
119
119
122X
100aB
100aG
100aR
100a
R
G
B
R
G
B
A2
122X
100b
A1
A1
R
G
B
R
G
B
119c (118a)
122X
A2
R
G
B
R
119x
G
119x
B
119x
122X
122zR
122zG
122zB
122z
Y
Z
X

FIG. 2

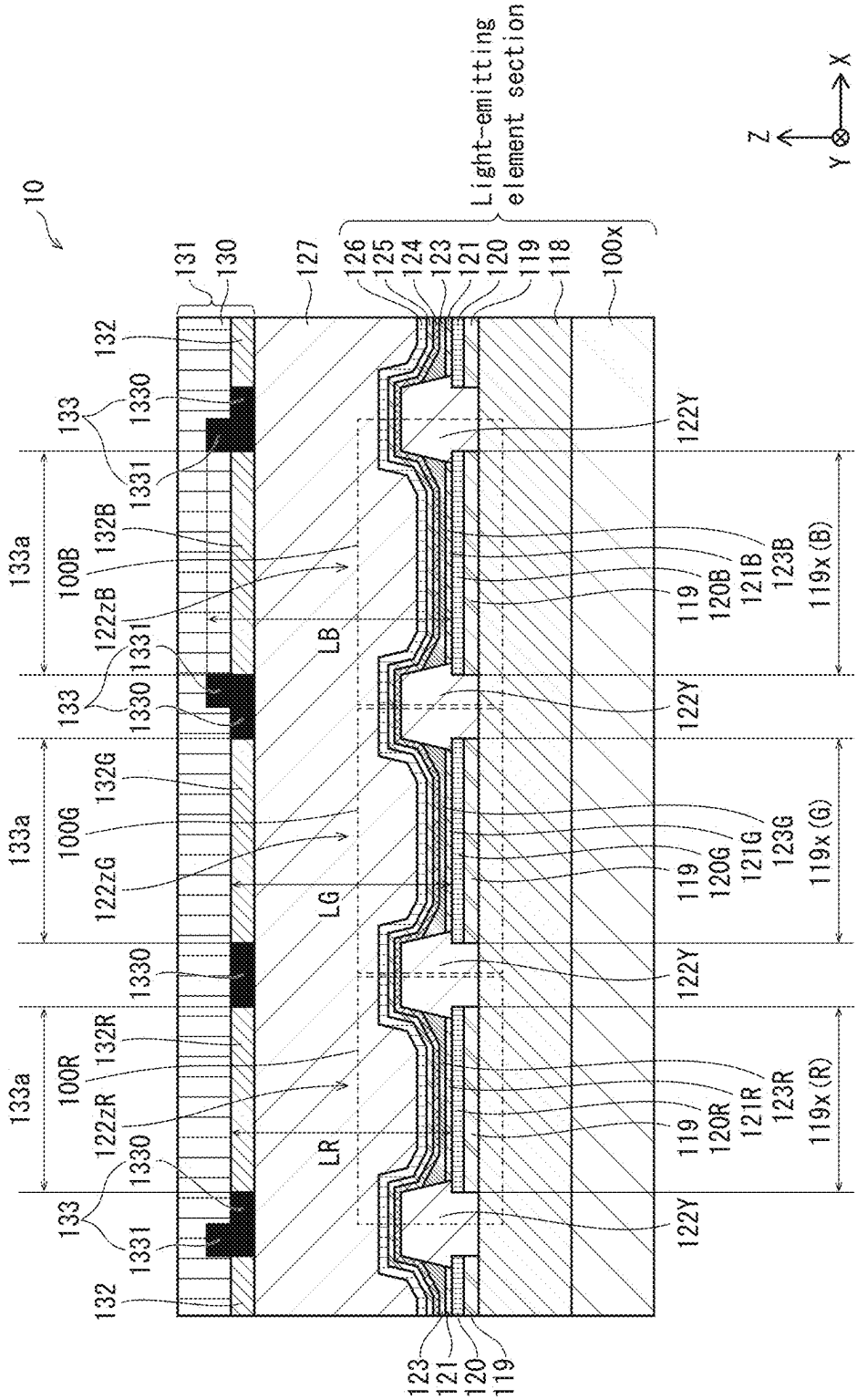
10
Light-emitting element section
X
Y
Z
131
130
127
126
125
124
123
121
120
119
118
100x
132
133
1330
1331
133a
100B
132B
122zB
LB
122Y
119
120B
121B
123B
119x (B)
100G
132G
122zG
LG
120G
121G
123G
119x (G)
100R
132R
122zR
LR
120R
121R
123R
119x (R)

FIG. 3

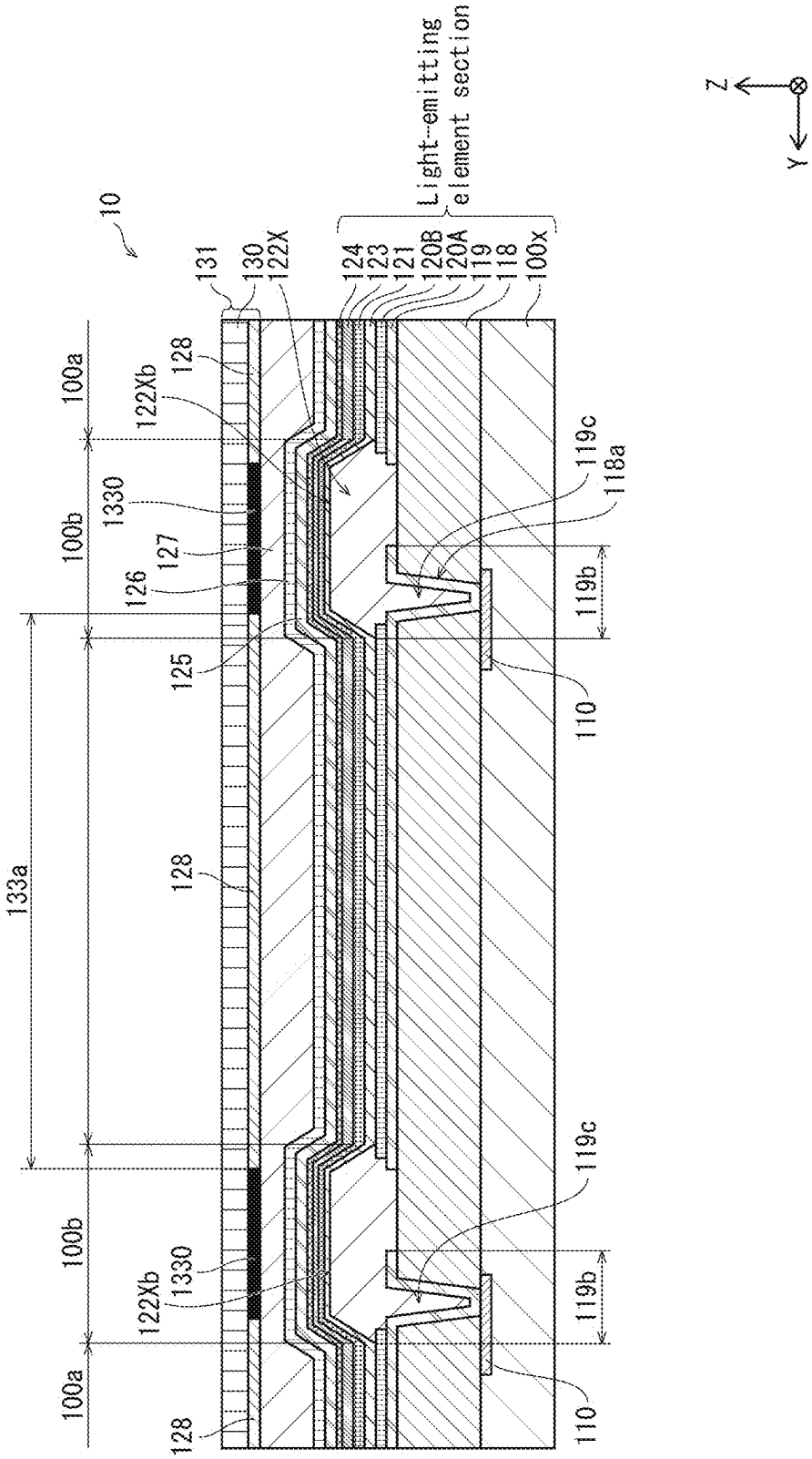
10
131
130
122X
124
123
121
120B
120A
119
118
100x
Light-emitting element section
Z
Y
100a
100b
100b
100a
128
122Xb
1330
127
126
125
128
133a
128
1330
122Xb
119c
118a
119b
110
119c
119b
110

FIG. 4

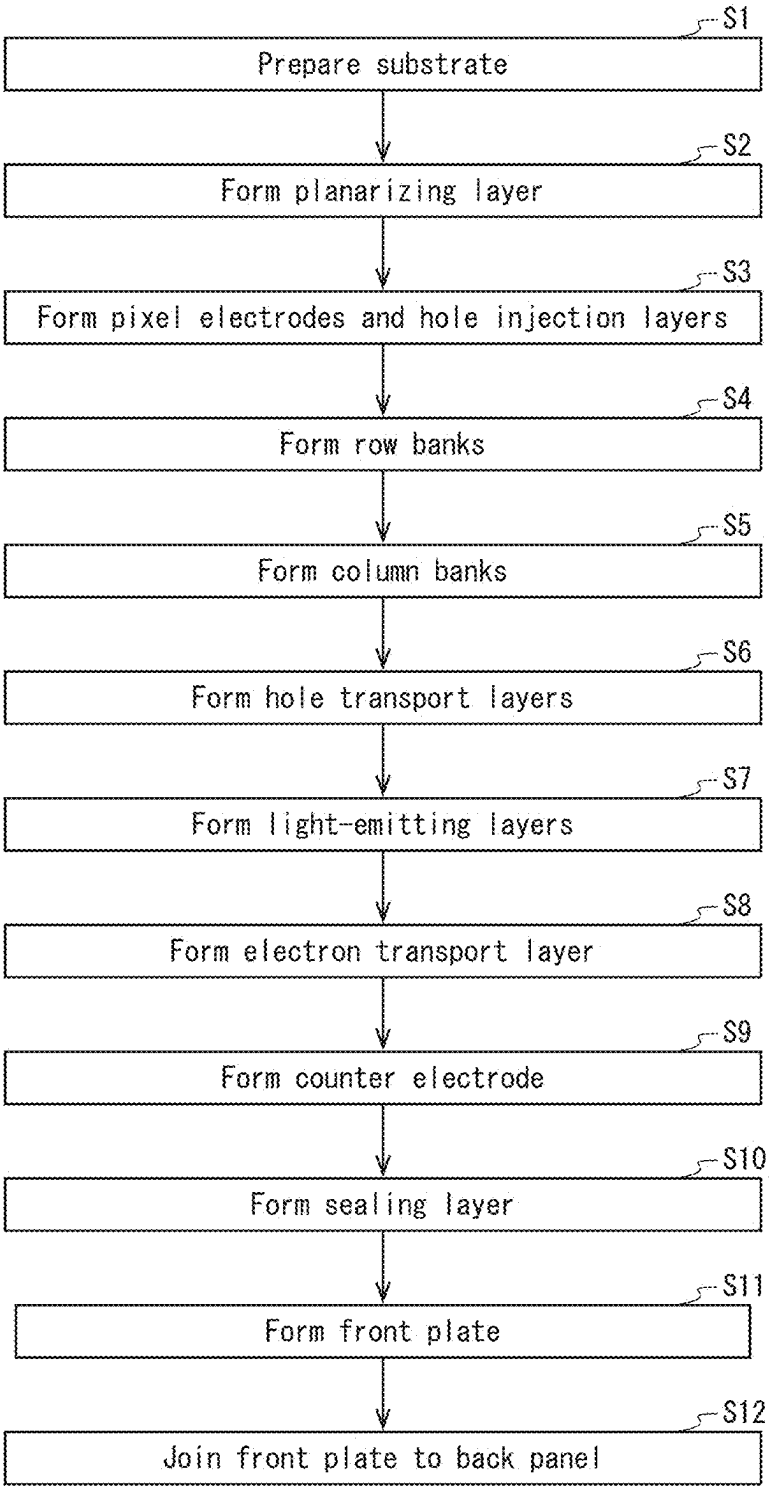
S1
Prepare substrate
S2
Form planarizing layer
S3
Form pixel electrodes and hole injection layers
S4
Form row banks
S5
Form column banks
S6
Form hole transport layers
S7
Form light-emitting layers
S8
Form electron transport layer
S9
Form counter electrode
S10
Form sealing layer
S11
Form front plate
S12
Join front plate to back panel

FIG. 5A

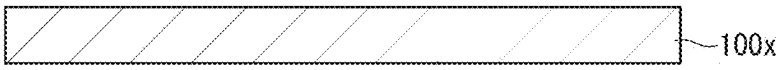

FIG. 5B

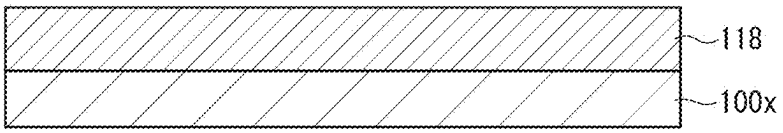

FIG. 5C

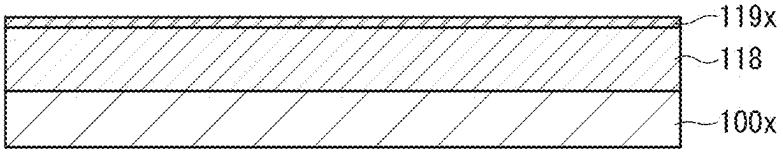

FIG. 5D

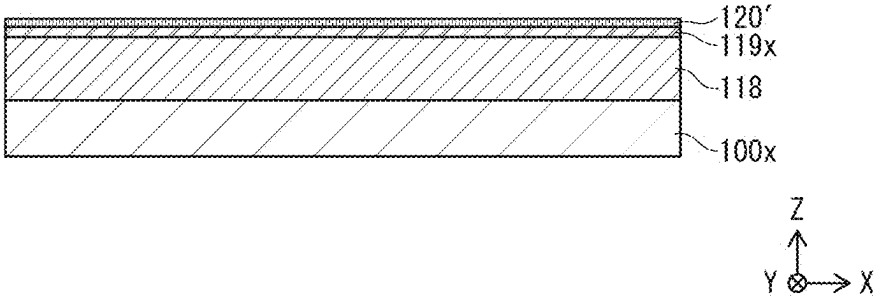

FIG. 6A

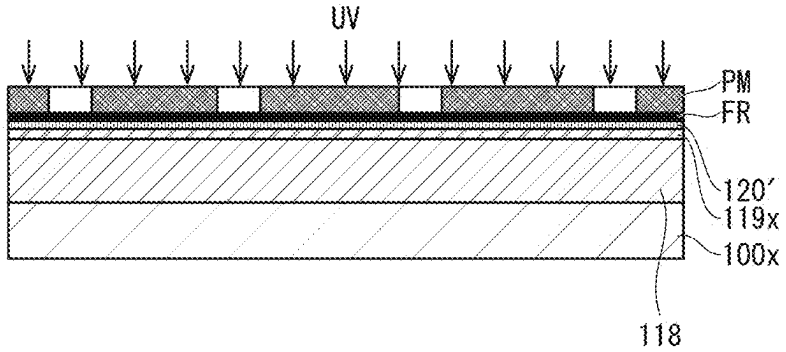

FIG. 6B

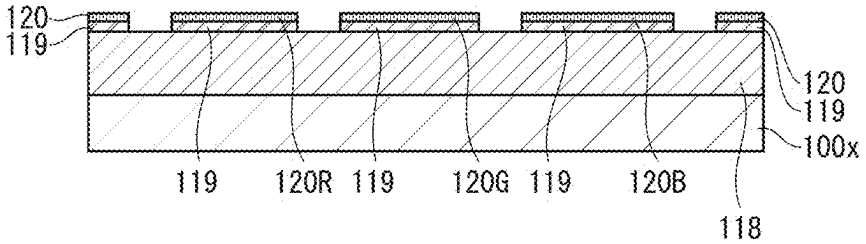

FIG. 6C

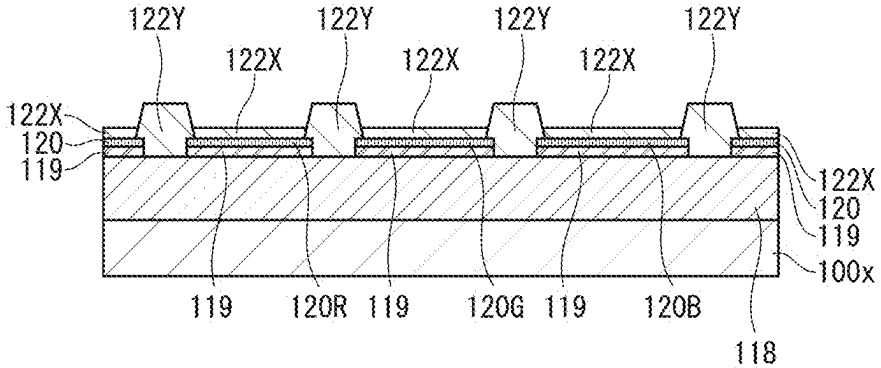

FIG. 6D

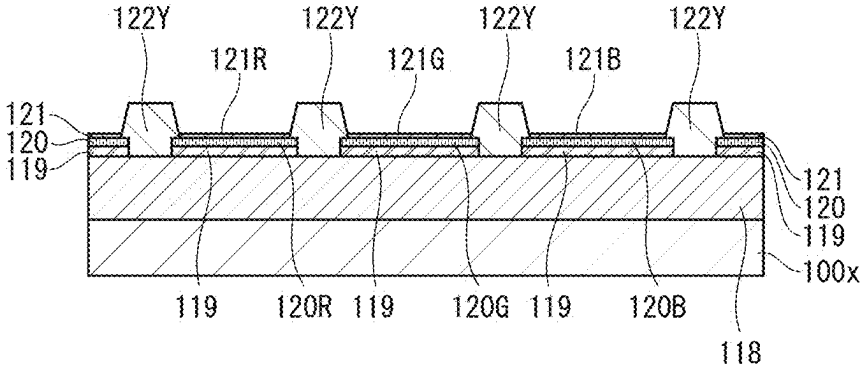

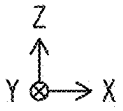

FIG. 7A

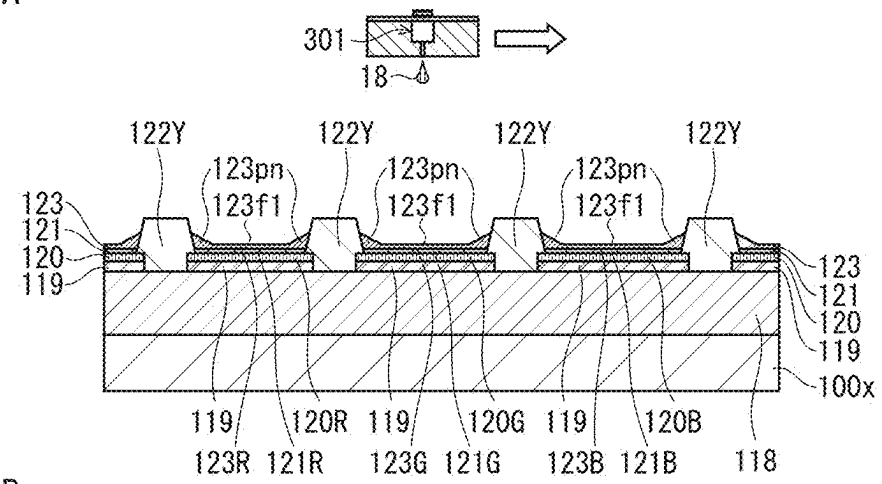

FIG. 7B

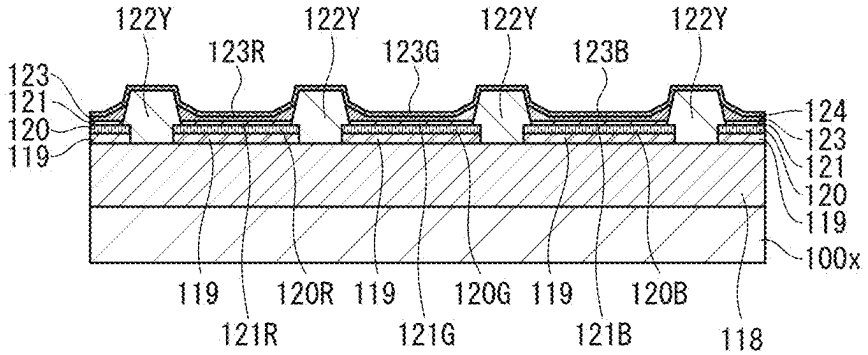

FIG. 7C

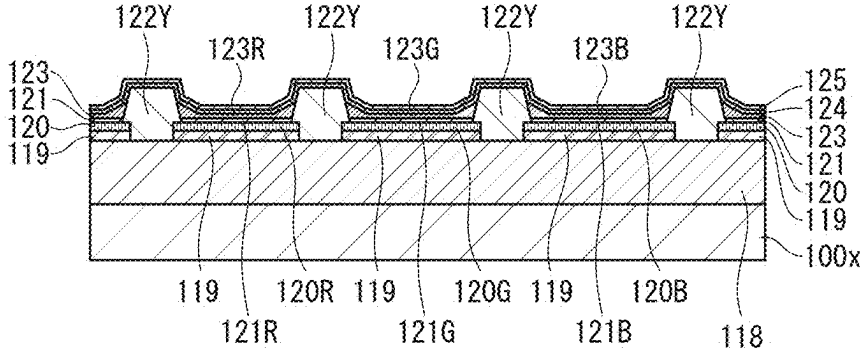

FIG. 7D

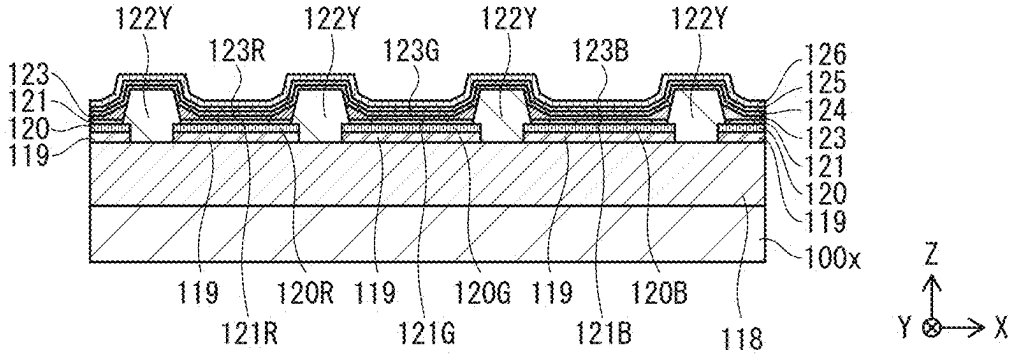

FIG. 8A

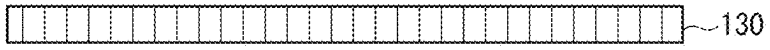

FIG. 8B

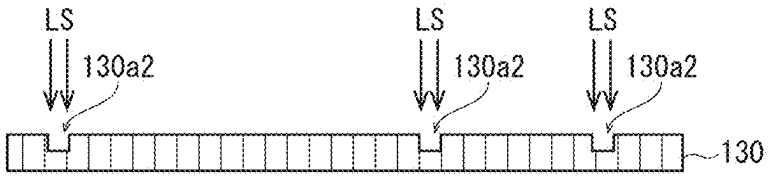

FIG. 8C

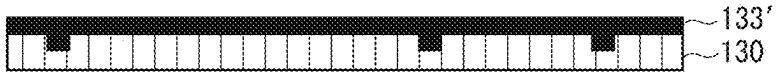

FIG. 8D

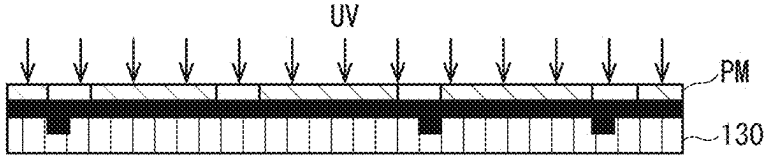

FIG. 8E

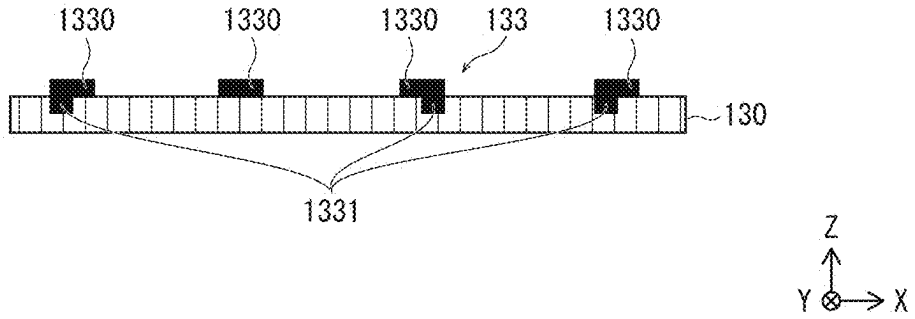

FIG. 9A

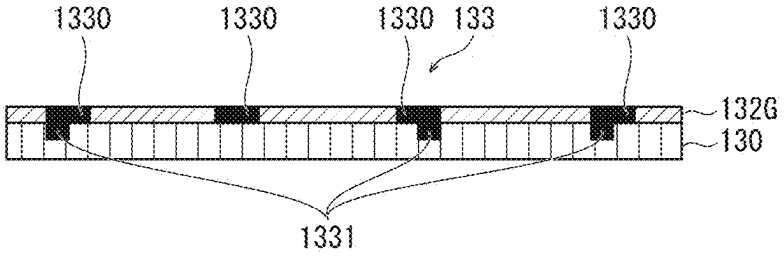

FIG. 9B

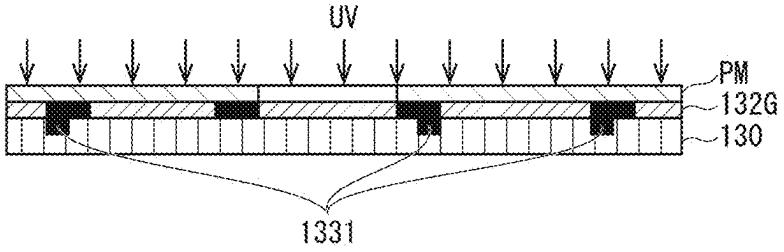

FIG. 9C

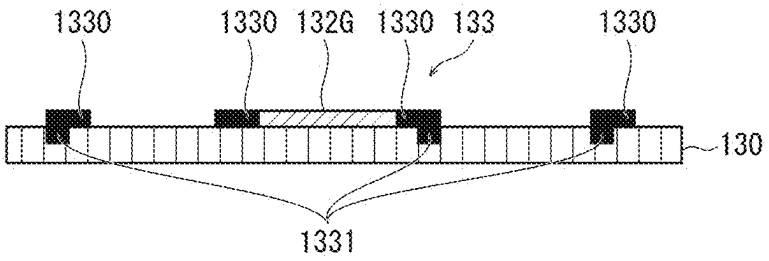

FIG. 9D

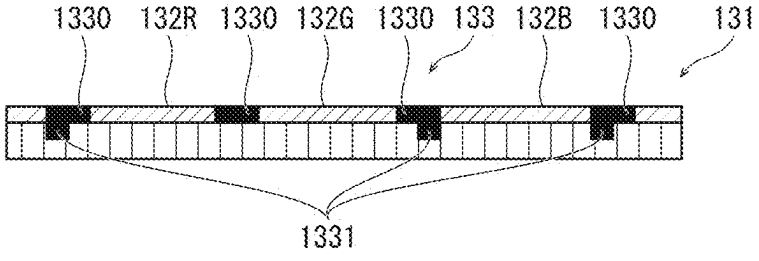

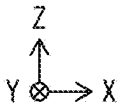

FIG. 10A

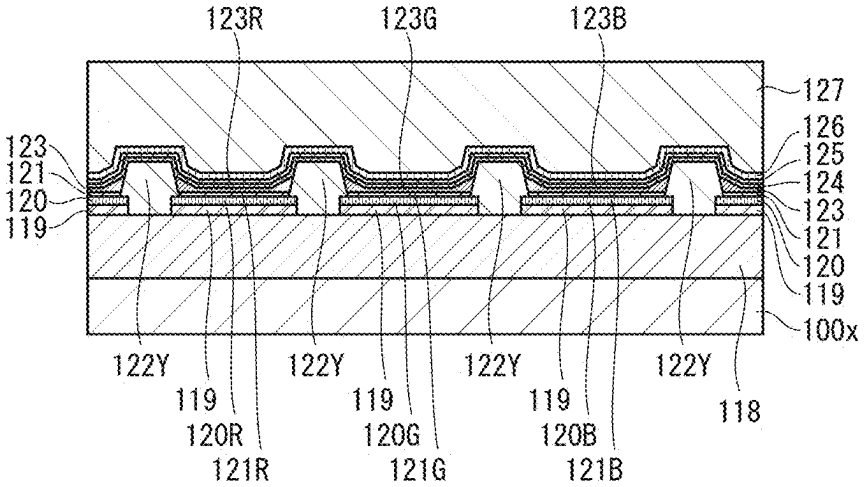

FIG. 10B

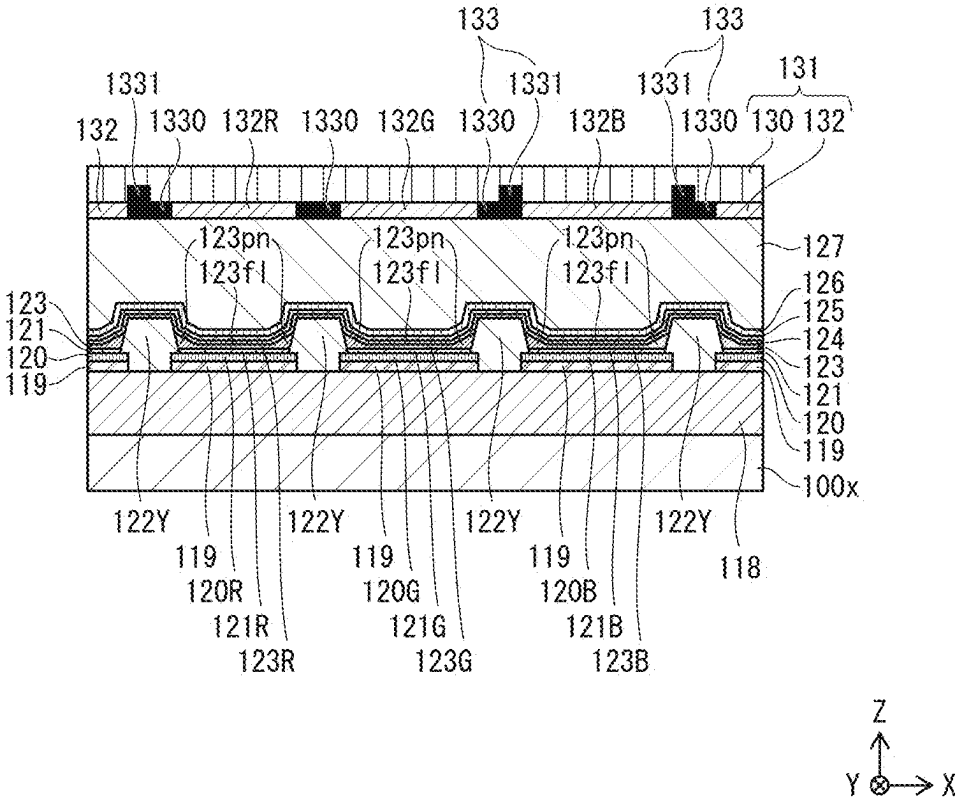

FIG. 11A

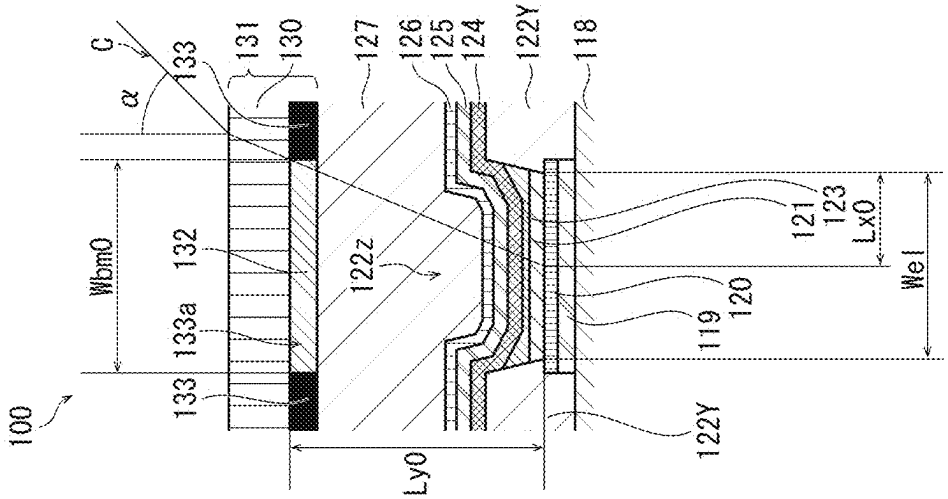

FIG. 11B

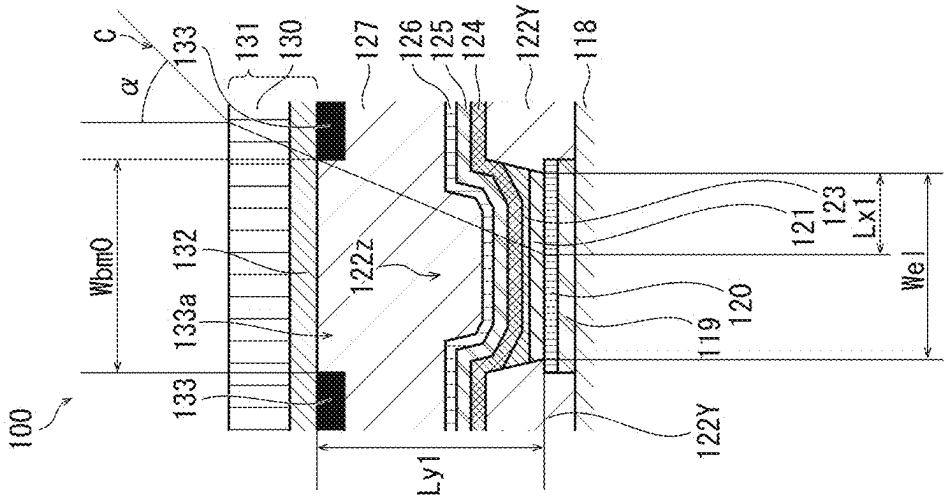

FIG. 11C

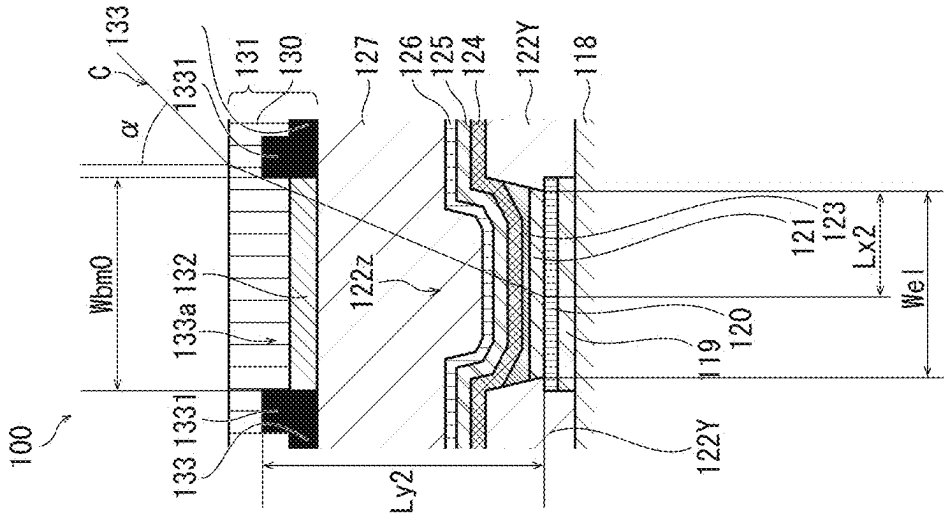

FIG. 12B

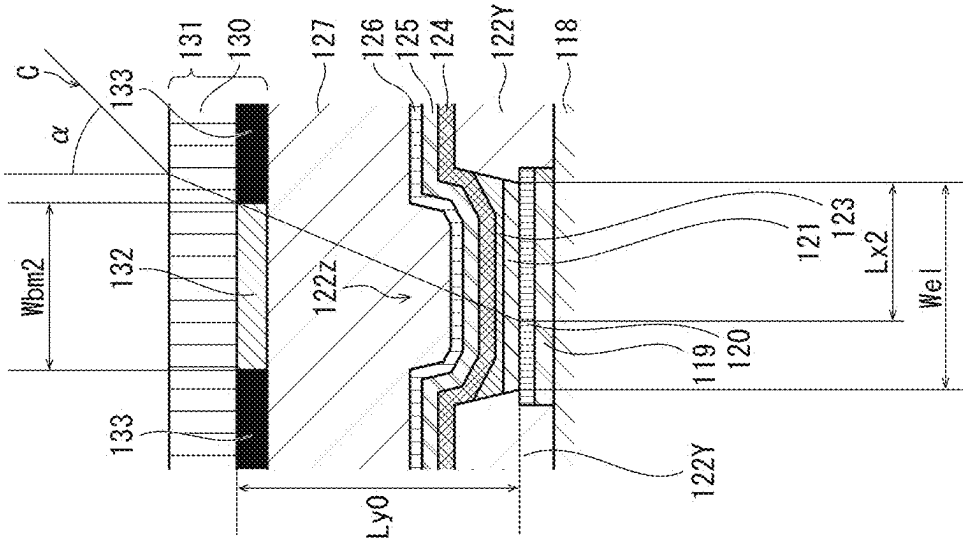

FIG. 12A

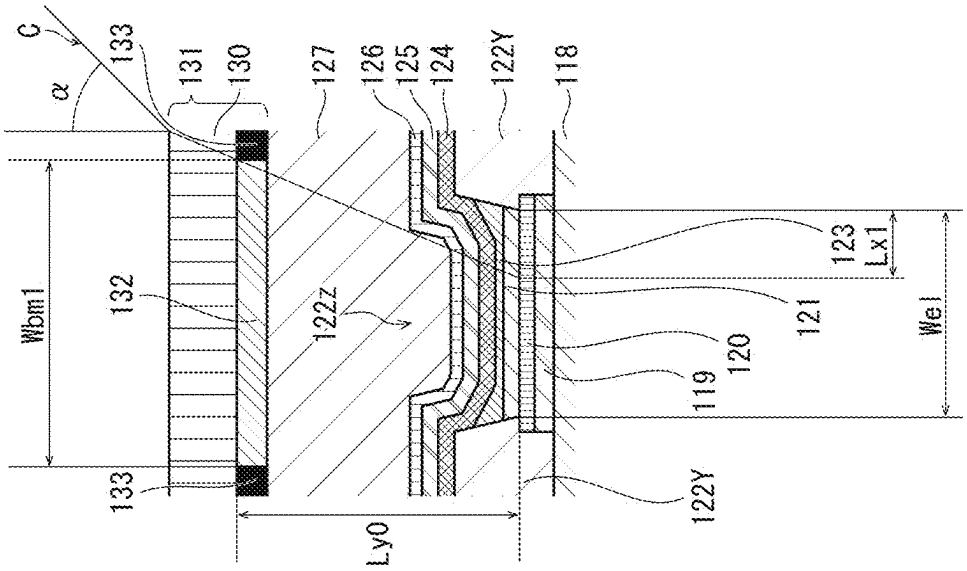

FIG. 13

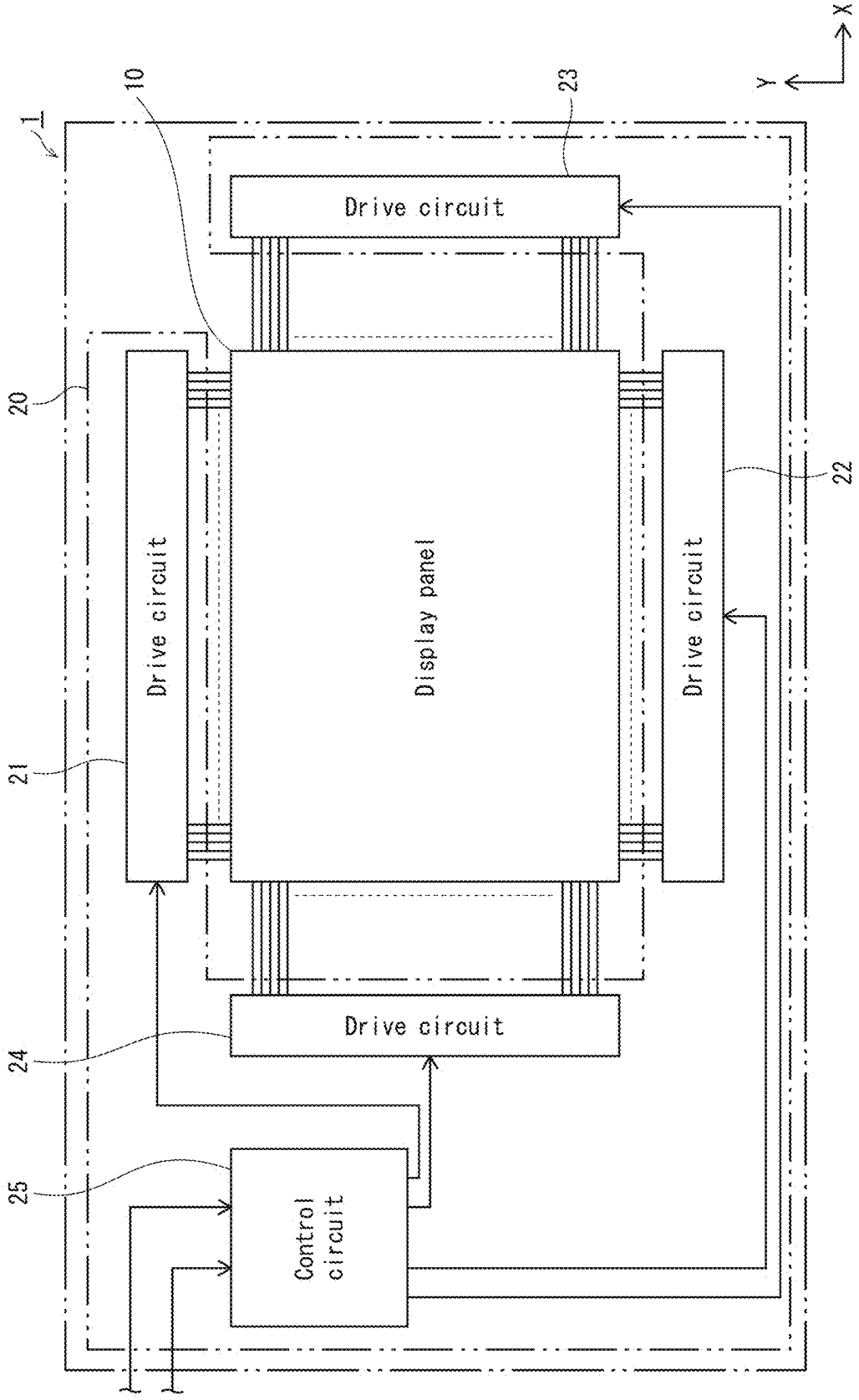
1
10
20
21
22
23
24
25
X
Y
Drive circuit
Drive circuit
Display panel
Drive circuit
Drive circuit
Control circuit

FIG. 14

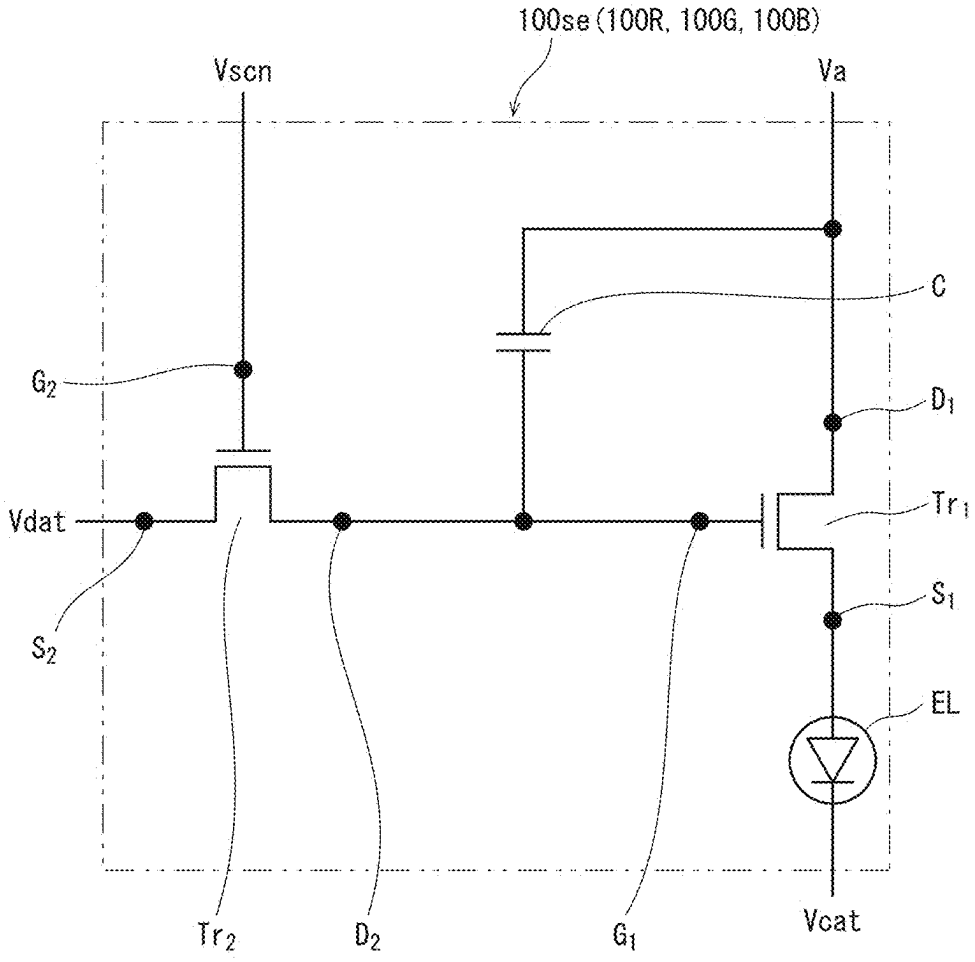
100se (100R, 100G, 100B)
Vscn
Va
C
G2
D1
Vdat
Tr1
S1
S2
EL
Tr2
D2
G1
Vcat

FIG. 15

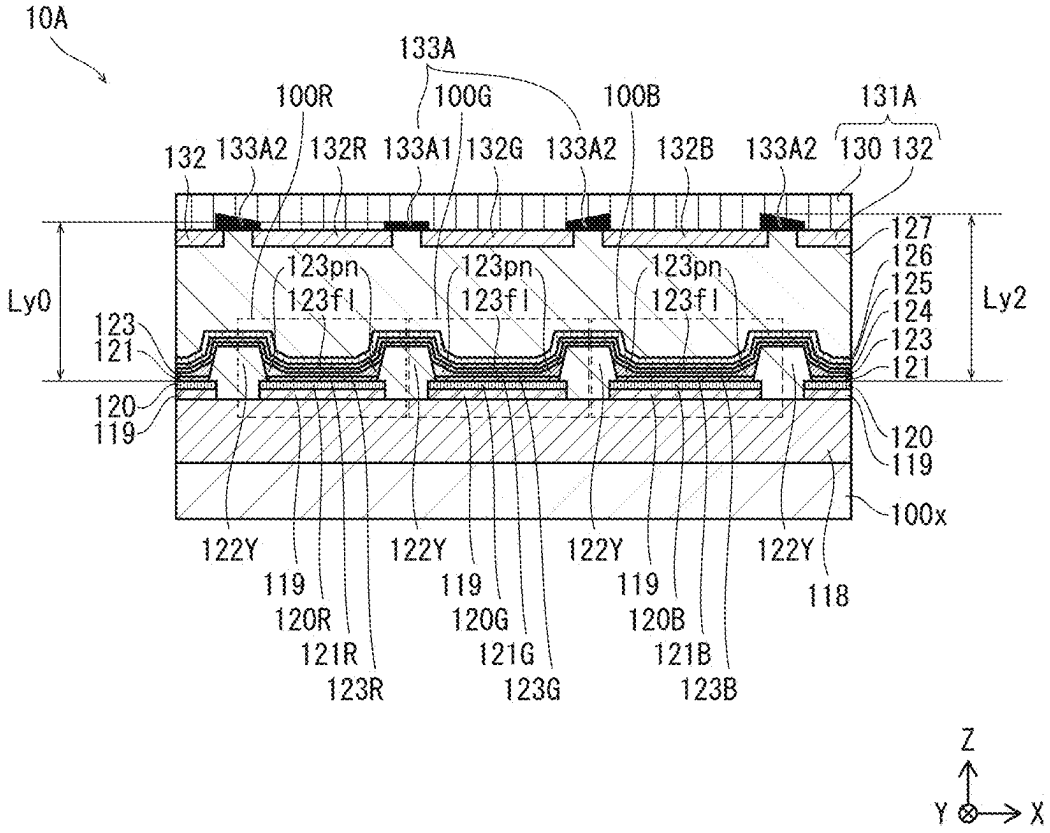
10A
133A
100R
100G
100B
131A
132
133A2
132R
133A1
132G
133A2
132B
133A2
130
132
127
126
125
124
123
121
Ly0
Ly2
123pn
123fl
123pn
123fl
123pn
123fl
123
121
120
119
120
119
100x
122Y
122Y
122Y
122Y
119
119
119
118
120R
120G
120B
121R
121G
121B
123R
123G
123B
Z
Y
X

FIG. 16A

FIG. 16B

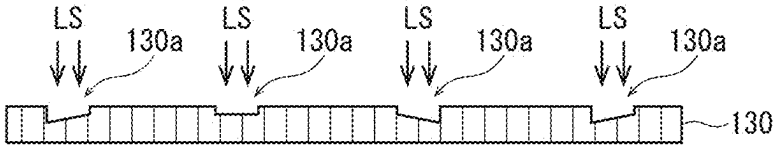

FIG. 16C

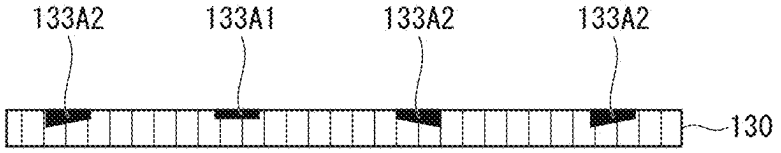

FIG. 16D

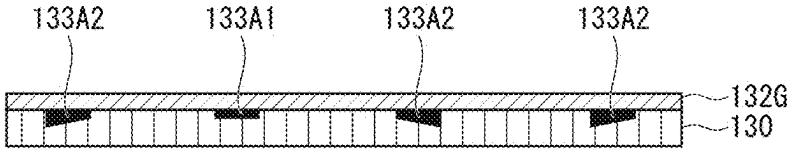

FIG. 16E

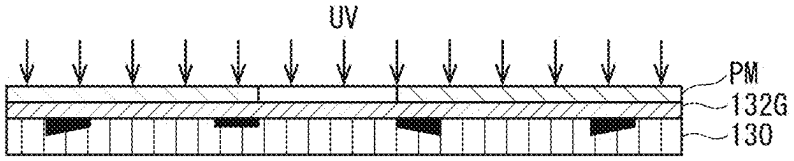

FIG. 16F

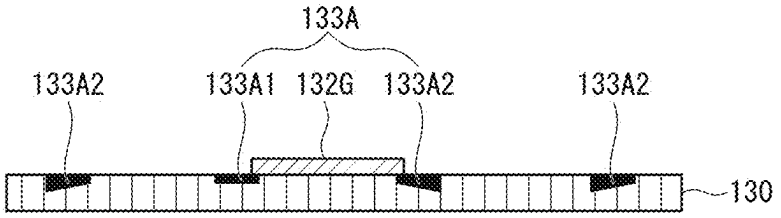

FIG. 16G

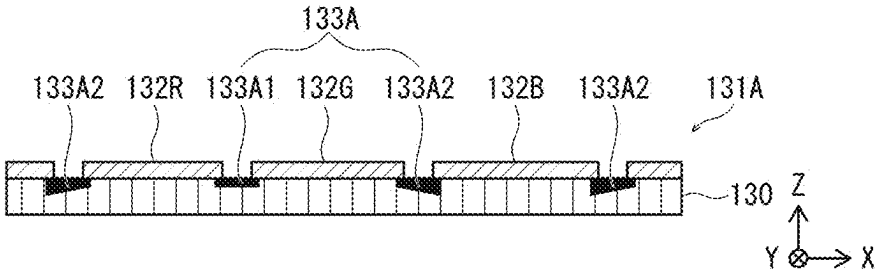

FIG. 17

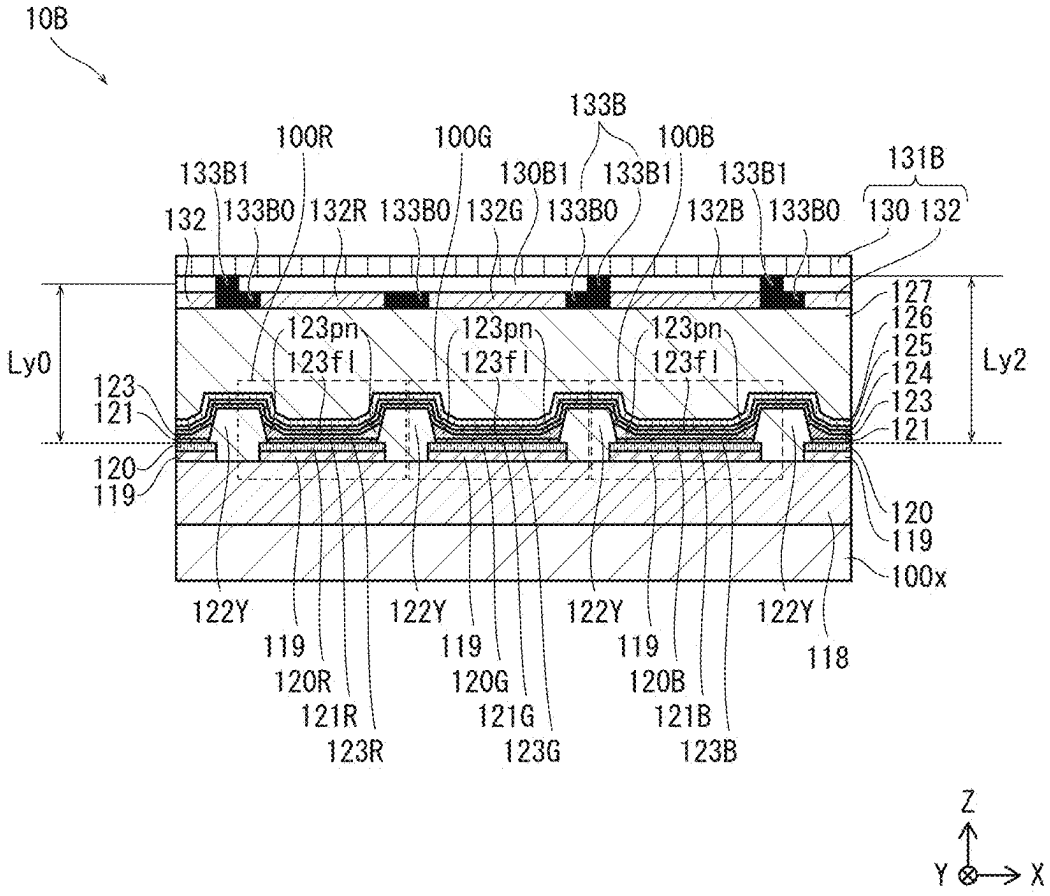
10B
133B
100R
100G
100B
133B1
130B1
133B1
133B1
131B
132
133B0
132R
133B0
132G
133B0
132B
133B0
130
132
127
126
125
124
123
121
Ly0
Ly2
123pn
123fl
123pn
123fl
123pn
123fl
123
121
120
119
120
119
100x
122Y
122Y
122Y
122Y
119
119
119
118
120R
120G
120B
121R
121G
121B
123R
123G
123B
Z
Y
X

FIG. 18A

FIG. 18B

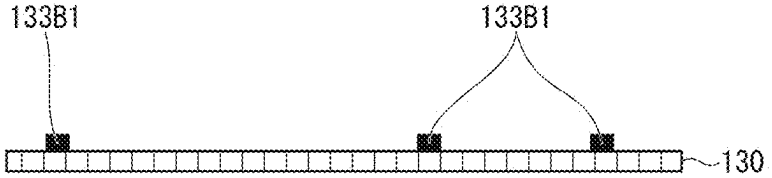

FIG. 18C

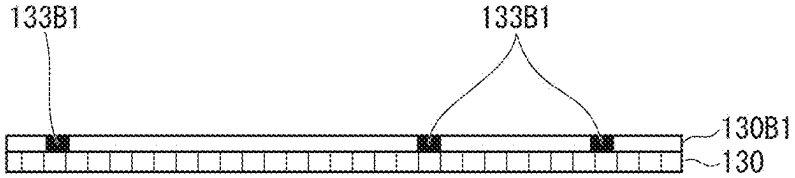

FIG. 18D

FIG. 18E

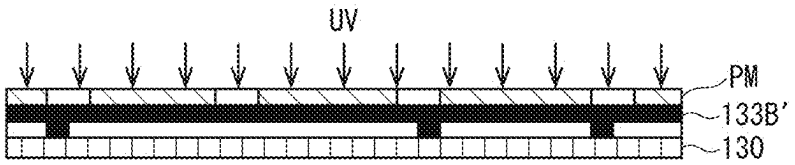

FIG. 18F

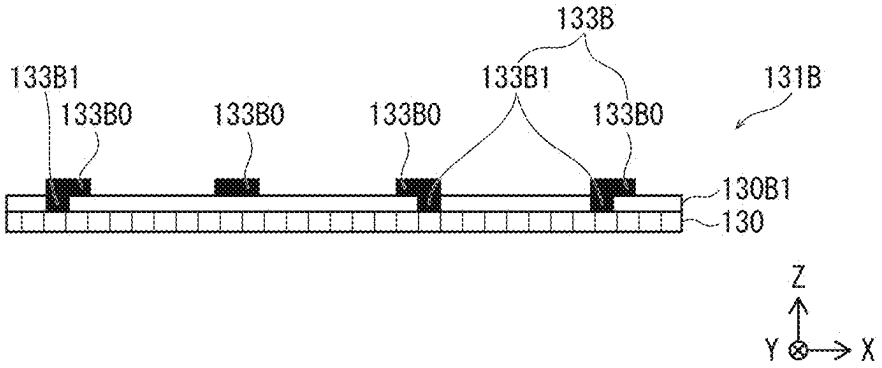

FIG. 19

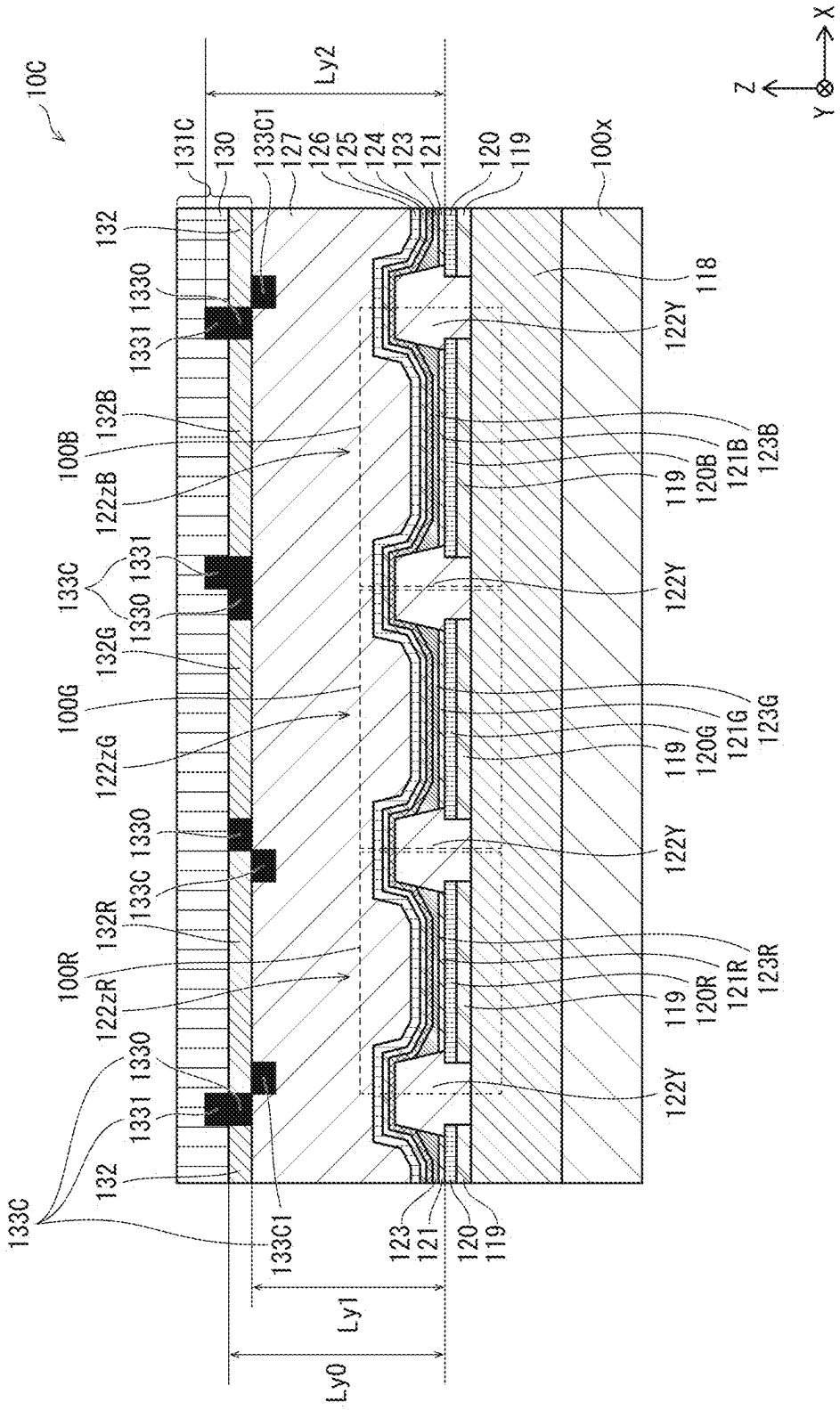
10C
Ly2
Ly1
Ly0
X
Y
Z
131C
130
133C1
127
126
125
124
123
121
120
119
100x
132
1330
1331
132B
100B
122zB
133C
132G
100G
122zG
132R
100R
122zR
118
122Y
123B
121B
120B
123G
121G
120G
123R
121R
120R

FIG. 20

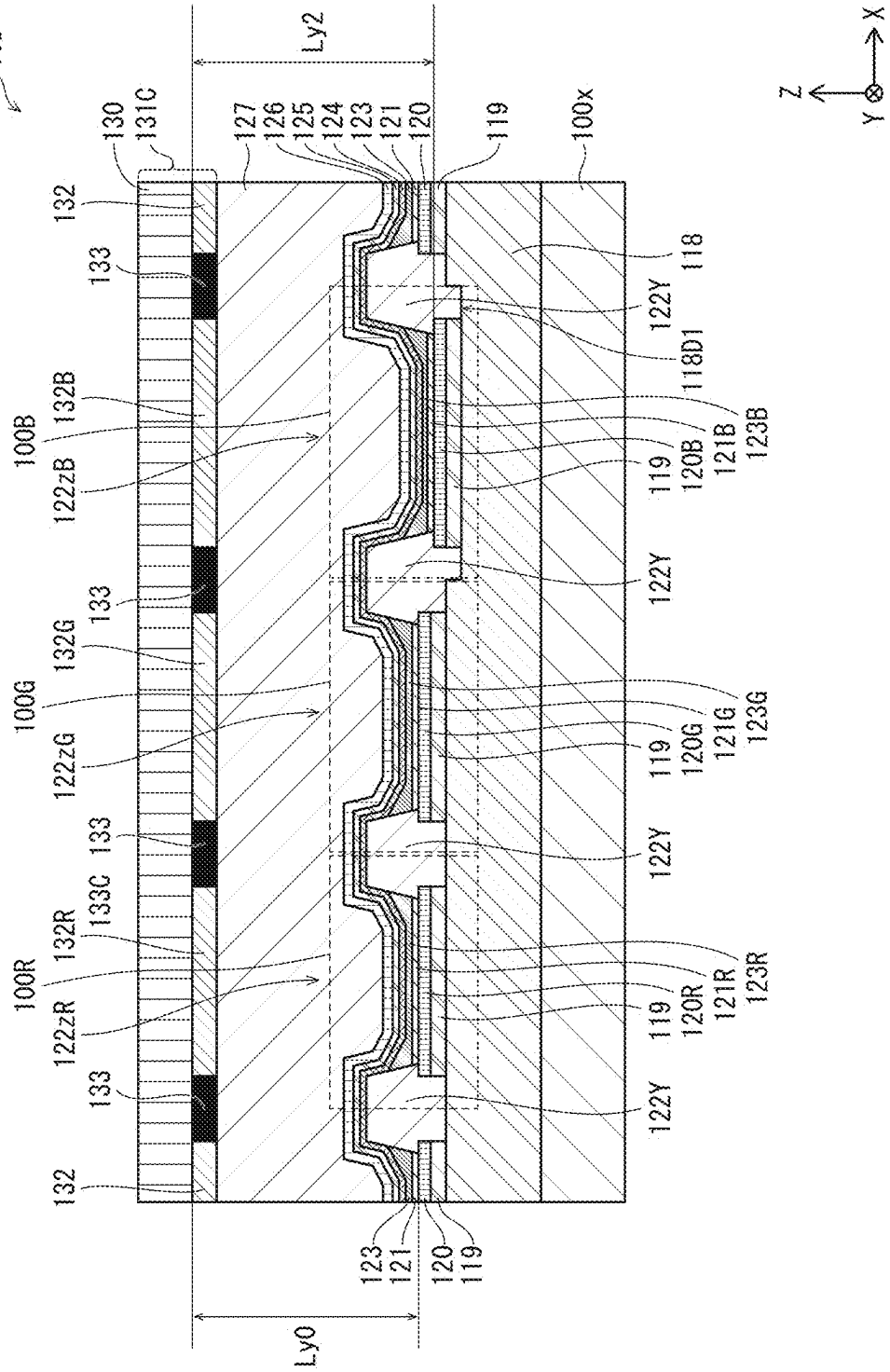
10D
130
131C
132
133
100B
132B
122zB
133
132G
100G
122zG
133
133C
132R
100R
122zR
133
132
Ly2
127
126
125
124
123
121
120
119
100x
118
122Y
118D1
119
120B
121B
123B
122Y
119
120G
121G
123G
122Y
119
120R
121R
123R
122Y
123
121
120
119
Ly0
X
Z
Y

FIG. 21

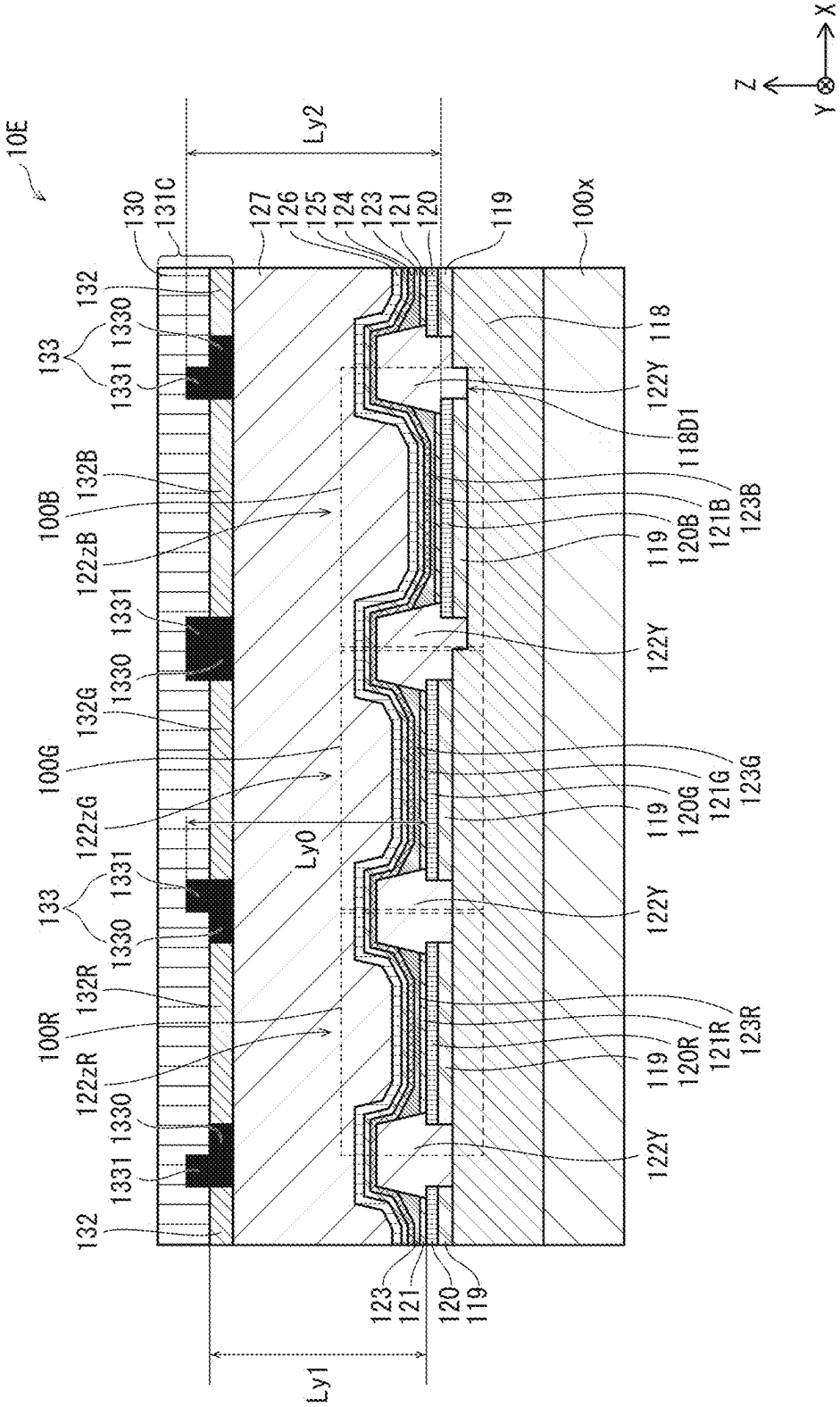
10E
Ly2
Ly0
Ly1
130
131C
127
126
125
124
123
121
120
119
100x
132
133
1330
1331
100B
132B
122zB
100G
132G
122zG
100R
132R
122zR
118
122Y
118D1
120B
121B
123B
120G
121G
123G
120R
121R
123R
Z
Y
X

FIG. 22

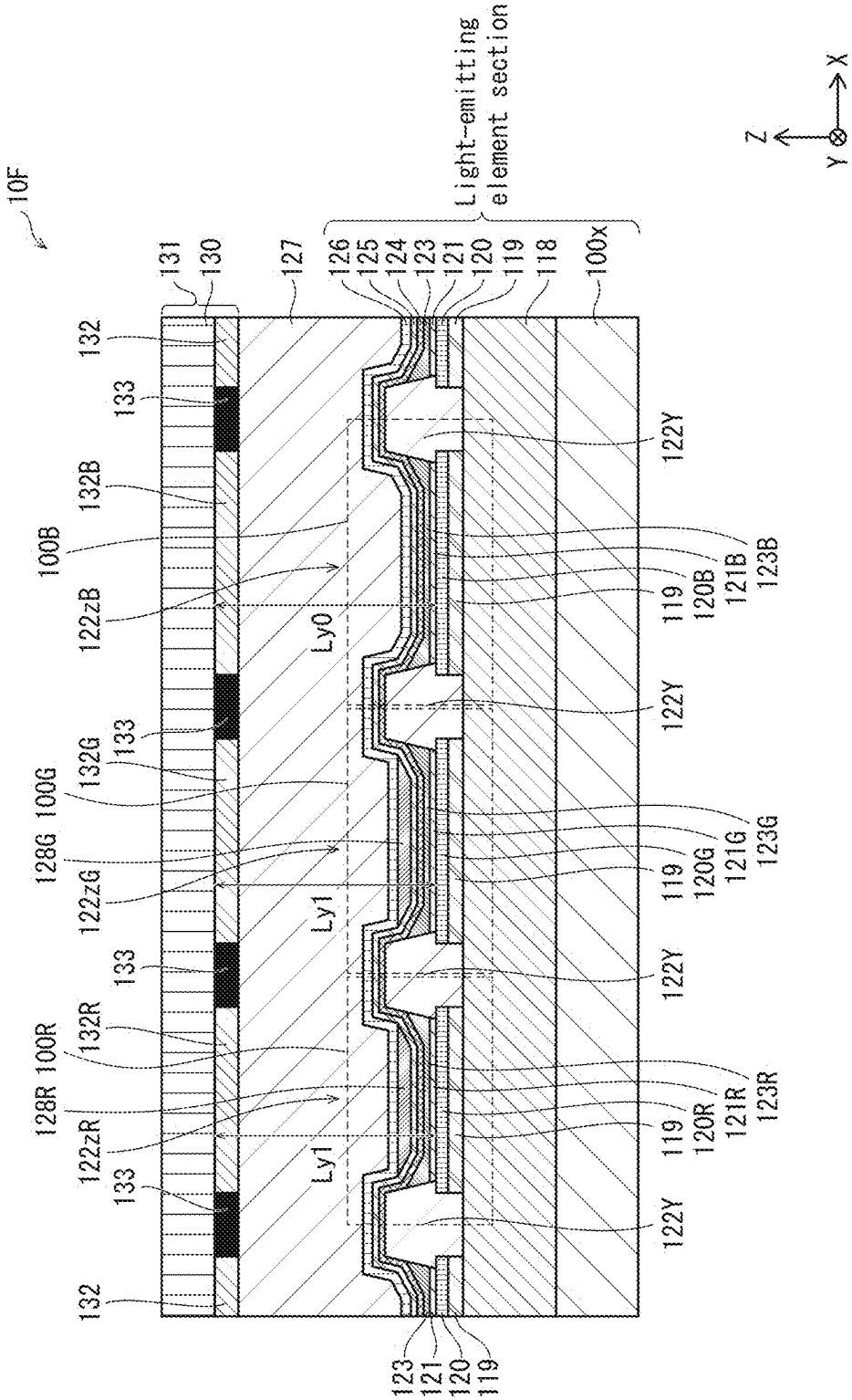
10F
Light-emitting element section
X
Y
Z
131
130
127
126
125
124
123
121
120
119
118
100x
132
133
132B
100B
122zB
Ly0
122Y
123B
121B
120B
119
132G
100G
128G
122zG
Ly1
123G
121G
120G
132R
100R
128R
122zR
123R
121R
120R

FIG. 23

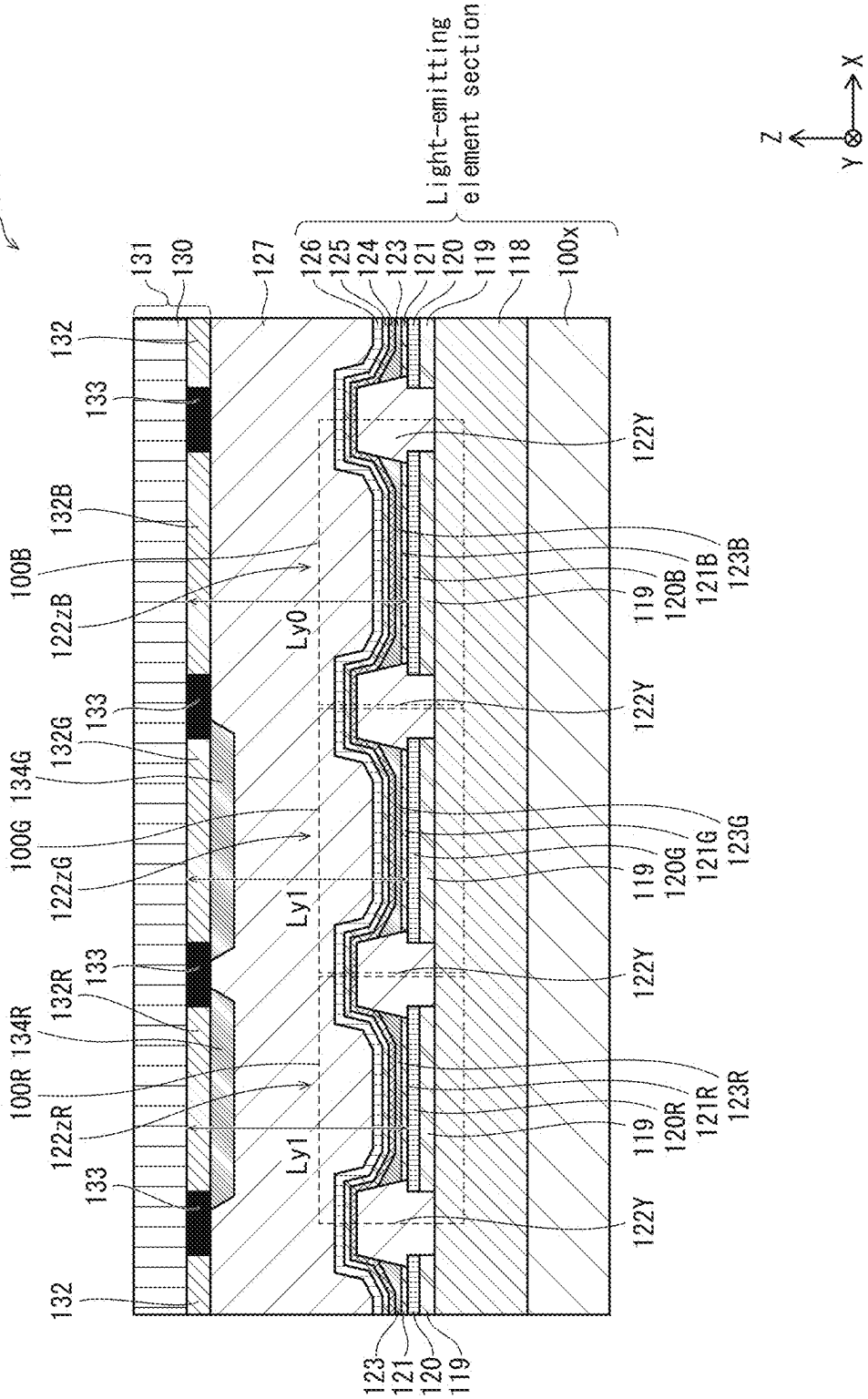
10G
Light-emitting element section
131
130
127
126
125
124
123
121
120
119
118
100x
132
133
132B
100B
122zB
Ly0
132G
134G
100G
122zG
Ly1
132R
134R
100R
122zR
122Y
123B
121B
120B
123G
121G
120G
123R
121R
120R
Z
Y
X

FIG. 24

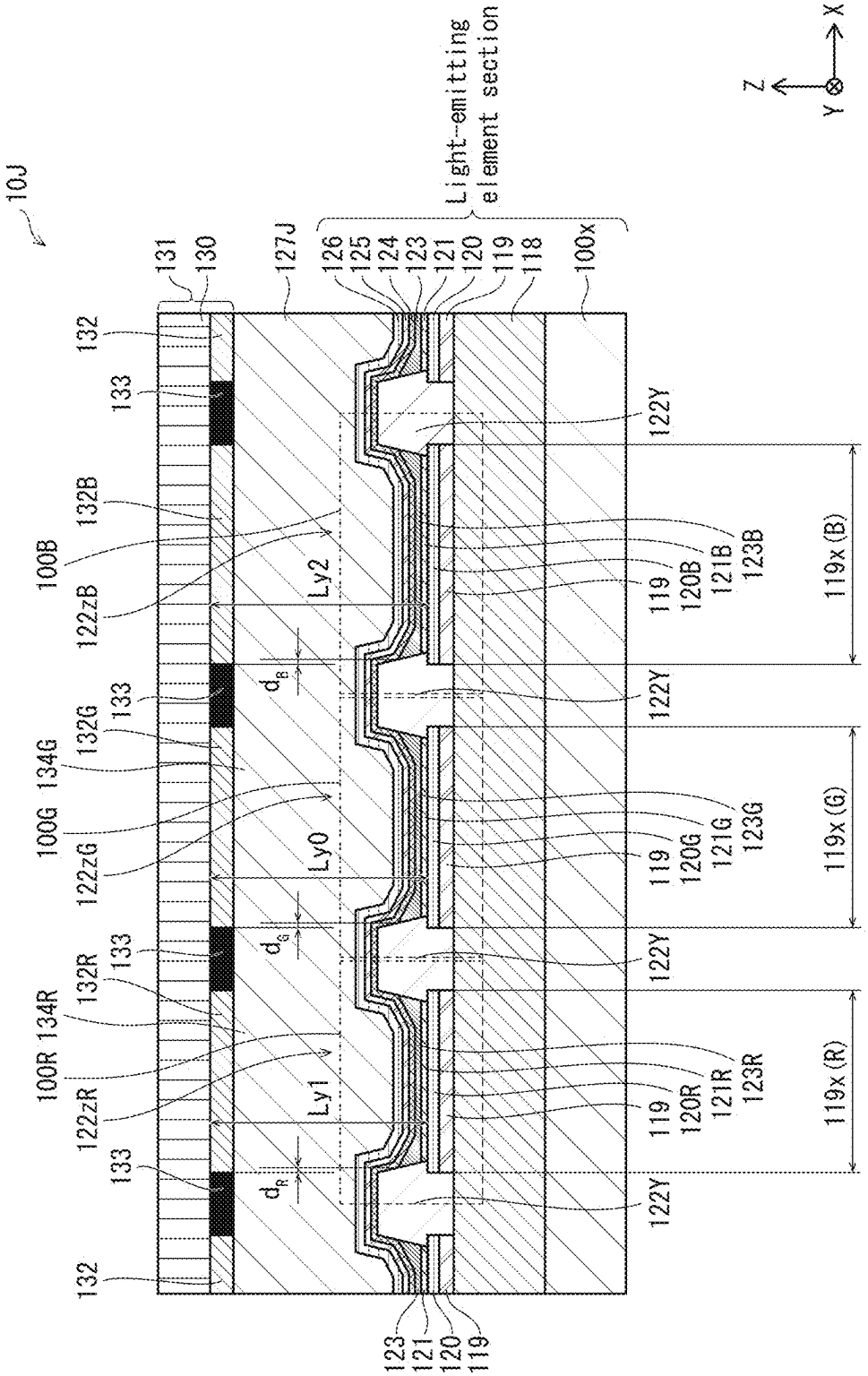
10J
Light-emitting element section
Z
Y
X
131
130
127J
126
125
124
123
121
120
119
118
100x
132
133
132B
100B
122zB
Ly2
d_B
132G
134G
100G
122zG
LyO
d_G
132R
134R
100R
122zR
Ly1
d_R
122Y
119x (B)
119x (G)
119x (R)
120B
121B
123B
120G
121G
123G
120R
121R
123R

FIG. 25

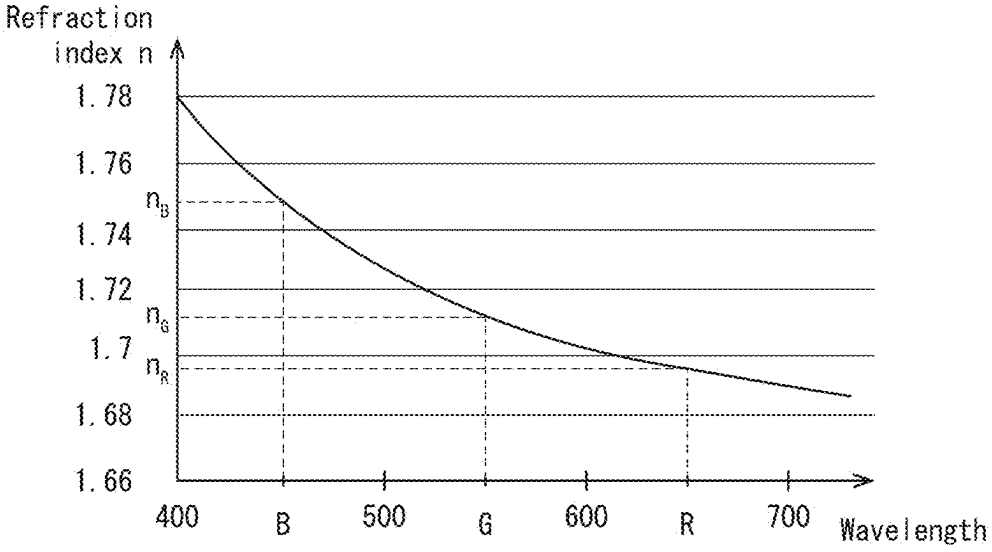
Refraction index n
1.78
1.76
n_B
1.74
1.72
n_G
1.7
n_R
1.68
1.66
400
B
500
G
600
R
700
Wavelength

FIG. 26

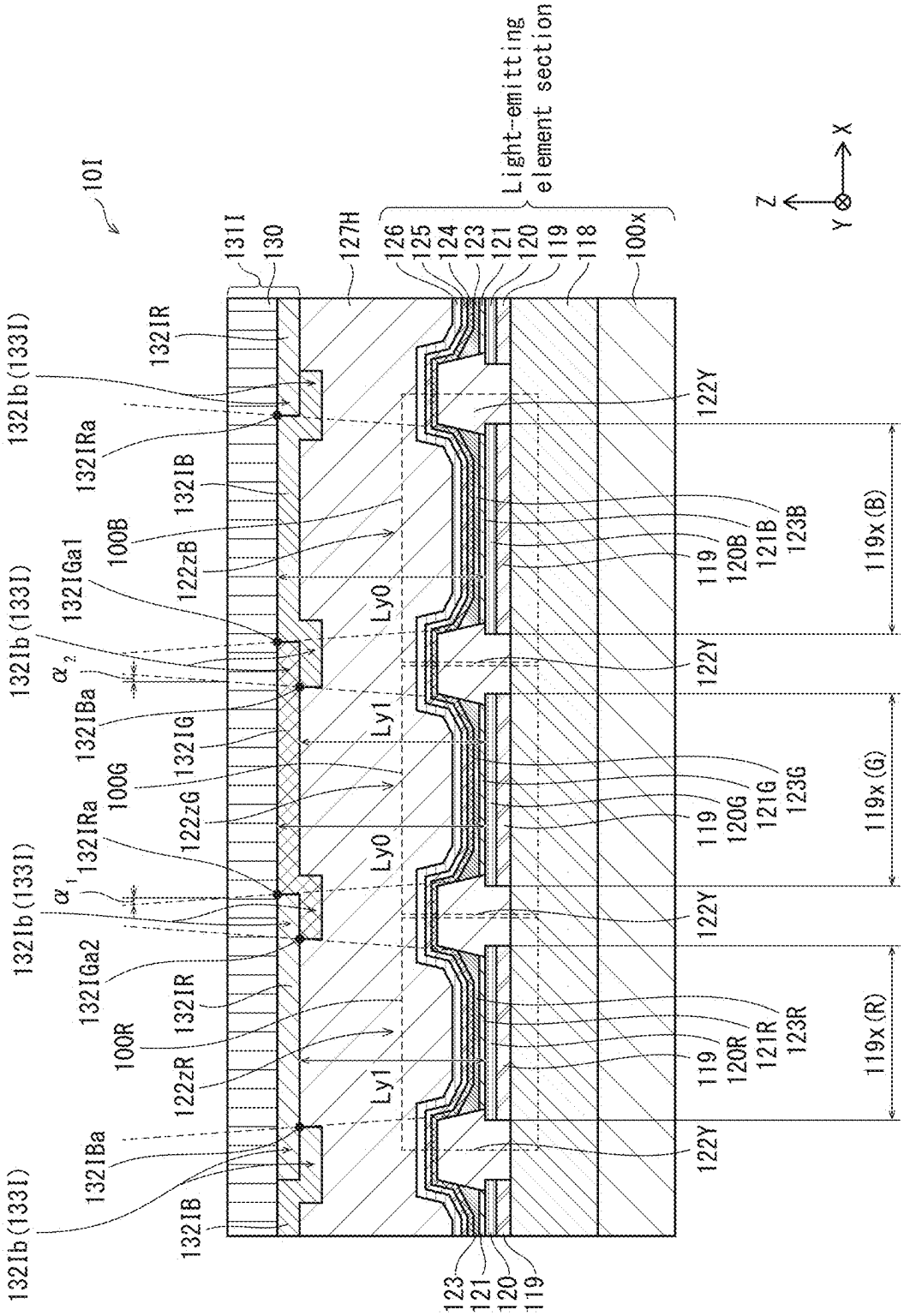
101
131I
130
127H
Light-emitting element section
126
125
124
123
121
120
119
118
100x
Z
X
Y
132IR
132Ib (133I)
132IRa
132IB
100B
122zB
132IGa1
α2
132IBa
132IG
100G
122zG
α1
132IGa2
100R
122zR
Ly0
Ly1
122Y
123B
121B
120B
119x (B)
123G
121G
120G
119x (G)
123R
121R
120R
119x (R)

FIG. 27

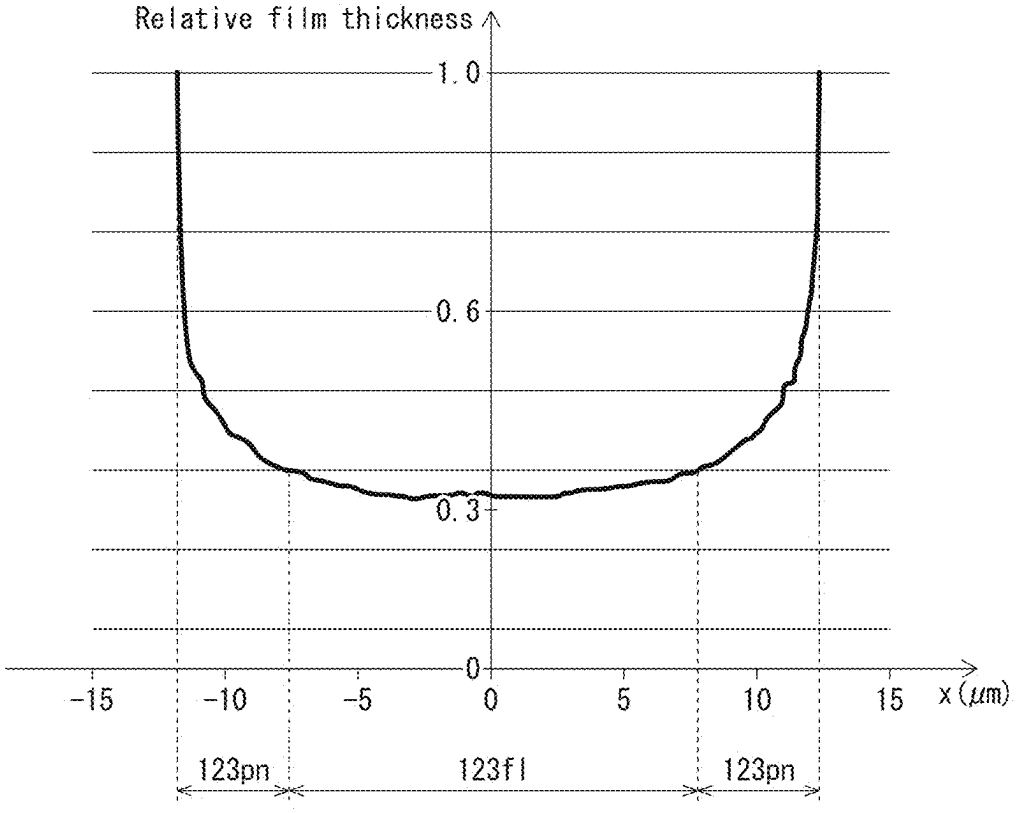
Relative film thickness
1.0
0.6
0.3
0
-15
-10
-5
0
5
10
15
x (μm)
123pn
123fl
123pn

FIG. 28

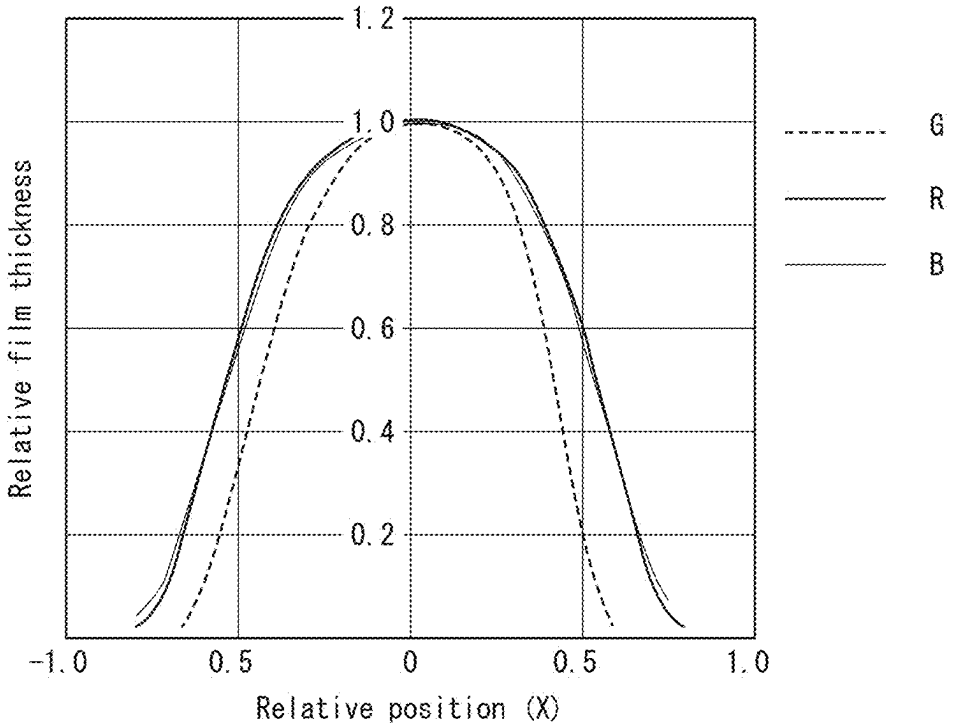
1.2
1.0
0.8
0.6
0.4
0.2
Relative film thickness
-1.0
0.5
0
0.5
1.0
Relative position (X)
G
R
B

FIG. 29

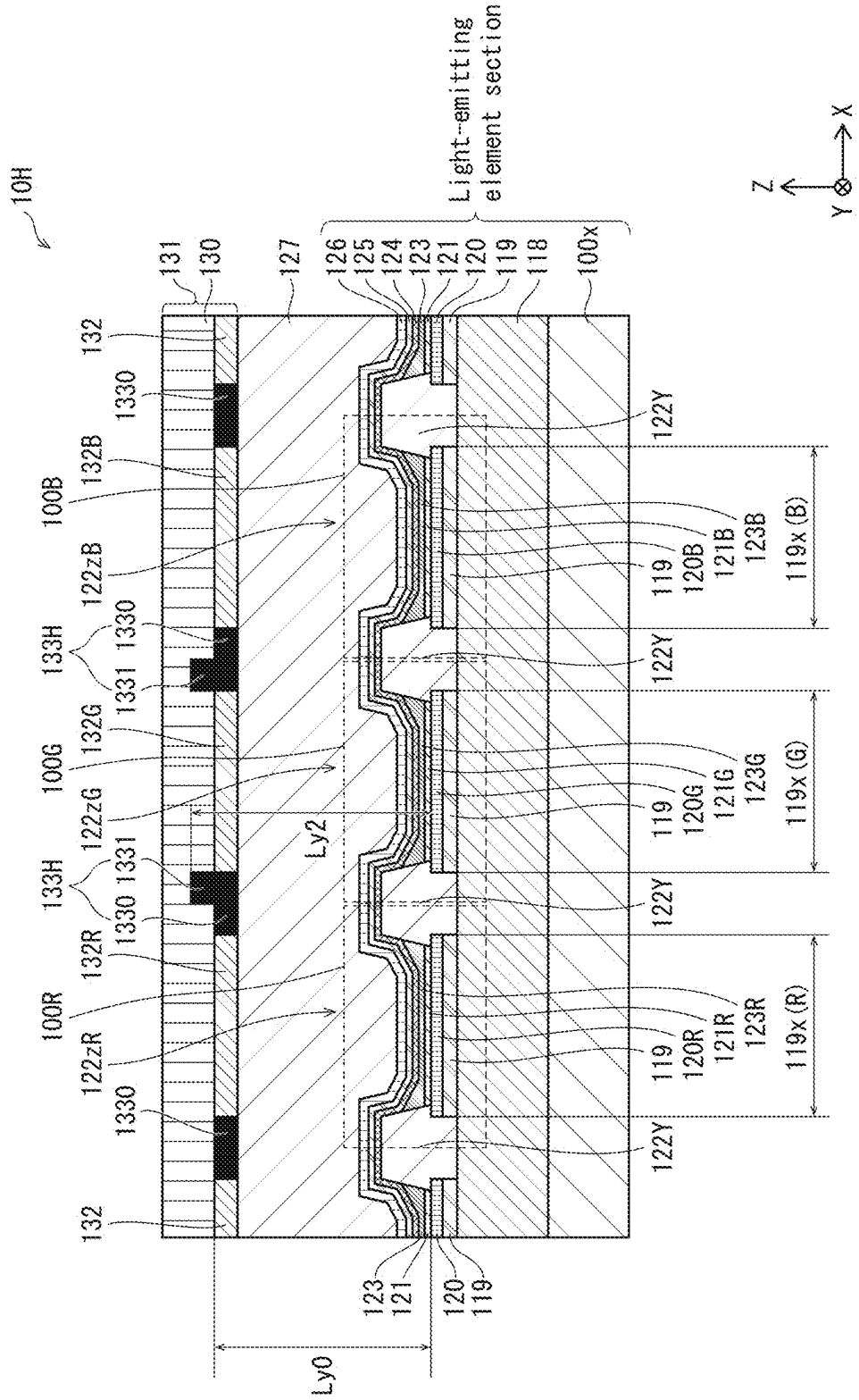
10H
Light-emitting element section
131
130
127
126
125
124
123
121
120
119
118
100x
132
1330
132B
100B
122zB
133H
1331
132G
100G
122zG
132R
100R
122zR
Ly2
Ly0
122Y
120B
121B
123B
119x (B)
120G
121G
123G
119x (G)
120R
121R
123R
119x (R)
Z
Y
X

FIG. 30

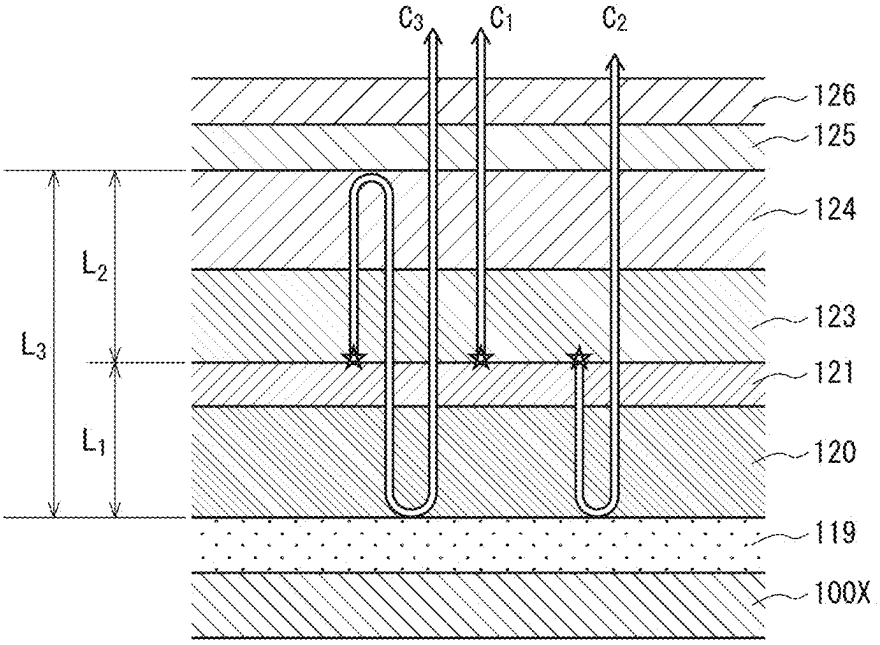

FIG. 31

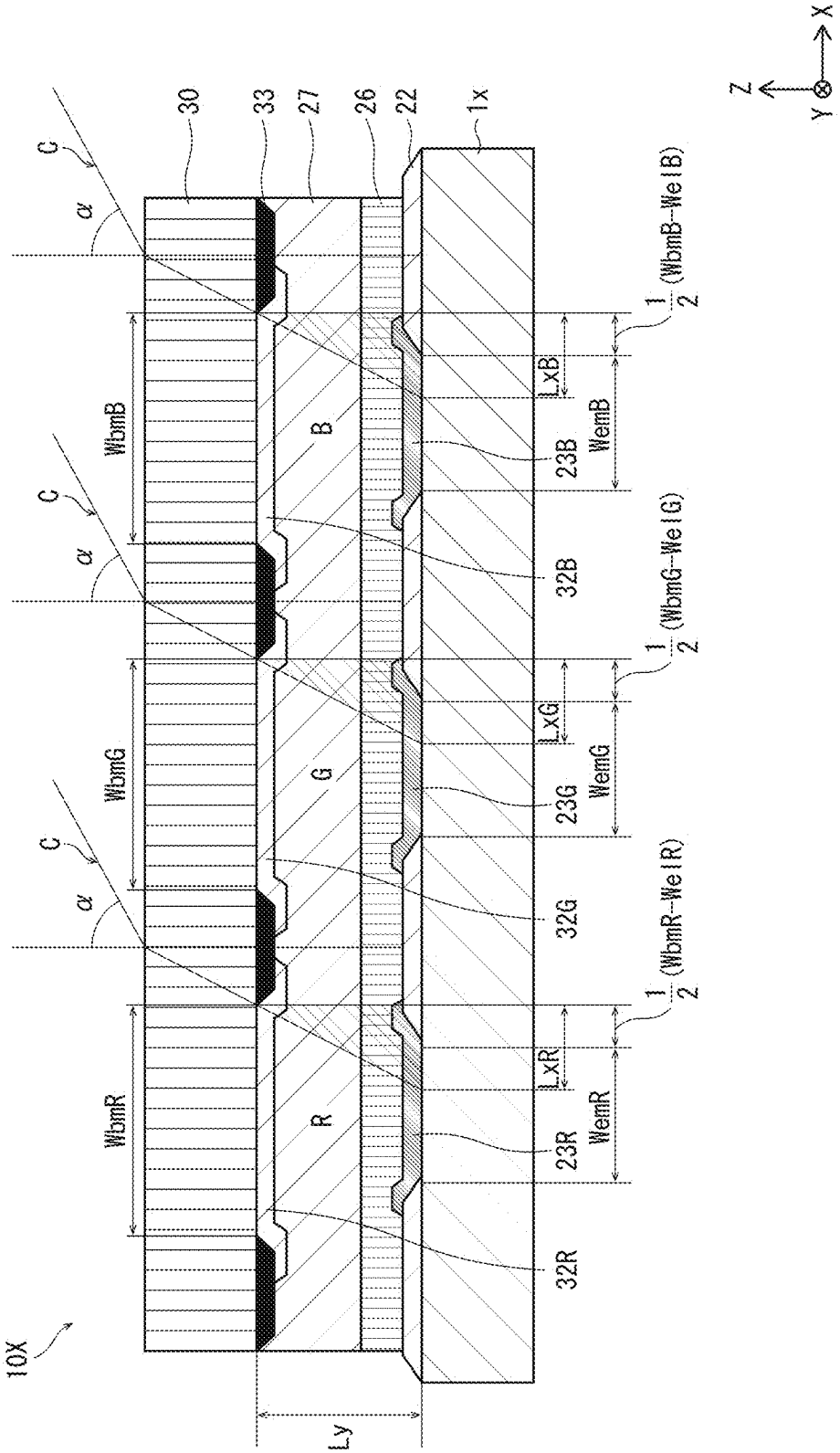
10X
C
α
30
33
27
26
22
1x
WbmR
WbmG
WbmB
R
G
B
32R
23R
32G
23G
32B
23B
LxR
LxG
LxB
WemR
WemG
WemB
1/2 (WbmR−WeIR)
1/2 (WbmG−WeIG)
1/2 (WbmB−WeIB)
Ly
Z
Y
X

SELF-LUMINOUS DISPLAY PANEL HAVING DIFFERENT OPTICAL DISTANCES BETWEEN LIGHT-SHIELDING FILM AND LIGHT EMISSION REFERENCE POINTS DEPENDING ON LIGHT EMISSION COLOR

CROSS-REFERENCE TO RELATED APPLICATIONS

[0001] The present application is a continuation of U.S. application Ser. No. 18/509,720, filed Nov. 15, 2023, which is a continuation of U.S. application Ser. No. 17/061,598 filed Oct. 2, 2020 (now U.S. Pat. No. 11,864,443), which claims priority to Japanese Patent Application No. 2019-184108, filed Oct. 4, 2019, and Japanese Patent Application No. 2020-145856, filed Aug. 31, 2020, the contents of each are hereby incorporated by reference in their entirety.

BACKGROUND OF THE DISCLOSURE

Technical Field

[0002] The present disclosure relates to display panels in which pixels including a light-emitting element such as an organic electroluminescence element (also referred to as an organic EL element) are arranged in two dimensions across a main surface of a substrate, and methods for manufacturing such display panels.

Description of the Related Art

[0003] In recent years, organic EL display panels in which organic EL elements are arranged in a matrix on a substrate have been implemented as display panels used in display devices such as digital televisions. An organic EL element has a basic structure in which a light-emitting layer including organic light-emitting material is sandwiched between a pair of electrodes. When driven, a voltage is applied between the pair of electrodes, causing recombination of holes and electrons injected into the light emitting layer and light emission.

[0004] A top-emission type of organic EL element has a structure in which a substrate, a pixel electrode made of a light-reflecting material (reflective electrode), an organic layer (including a light-emitting layer), and a counter electrode made of a light-transmissive material are arranged in this order. By adopting an optical resonator structure in which constructive interference between light from the light-emitting layer reflected by the reflective electrode and emitted from the counter electrode and light emitted directly from the light-emitting layer, high light extraction efficiency can be realized.

[0005] In an organic EL display panel for a color display, such an organic EL element forms a red (R), green (G), or blue (B) color sub-pixel, and adjacent RGB sub-pixels combine to form a pixel in the color display. Typically, in an organic EL display panel, as described in JP 2008-226747, for example, a grid-shaped light shielding film is provided at boundaries between adjacent sub-pixels, and a color filter layer corresponding to each of the RGB colors is provided above the sub-pixels that are surrounded in plan view by the light shielding film. This prevents a reduction in display contrast caused by reflection of external light on outer edges of reflective electrodes of sub-pixels and prevents mixing of colors between adjacent pixels.

[0006] However, when the organic EL display panel is viewed at an angle from the front, the grid-shaped light shielding film shields a portion of each light-emitting area of the sub-pixels, and therefore chromaticity of a display image changes. To address this problem, for example, JP 2011-40352 describes a technique for reducing chromaticity changes when viewed from an oblique angle, by making sizes of banks that partition RGB colors of sub-pixels and sizes of a grid-shaped light shielding film different for each color of sub-pixel.

SUMMARY

[0007] A self-luminous display panel according to at least one embodiment of the present disclosure is a self-luminous display panel in which pixels composed of sub-pixels are arranged, including light-emitting elements and a light-shielding film. The light-emitting elements correspond one-to-one with the sub-pixels, each sub-pixel in a pixel emitting a different color of light. The light-shielding film is provided with openings at positions corresponding to the light-emitting elements in plan view, downstream in a light emission direction of the light-emitting elements. Optical distances between the light-shielding film and light emission reference points of the light-emitting elements are different, depending on light emission color of the light-emitting elements.

BRIEF DESCRIPTION OF DRAWINGS

[0008] These and other objects, advantages, and features of the technology pertaining to the present disclosure will become apparent from the following description thereof taken in conjunction with the accompanying drawings, which illustrate at least one embodiment of the technology pertaining to the present disclosure.

[0009] FIG. **1** is a schematic plan view diagram enlargement of a portion of an organic EL display panel **10** according to at least one embodiment.

[0010] FIG. **2** is a diagram of a cross-section taken along a line A**1**-A**1** in FIG. **1**, according to at least one embodiment.

[0011] FIG. **3** is a diagram of a cross-section taken along a line A**2**-A**2** in FIG. **1**, according to at least one embodiment.

[0012] FIG. **4** is a flowchart of a method of manufacturing the organic EL display panel **10** according to at least one embodiment.

[0013] FIGS. **5**A, **5**B, **5**C, and **5**D are schematic diagrams of cross-sections taken from the same location as A**1**-A**1** in FIG. **1**, illustrating states in manufacturing of the organic EL display panel **10**, according to at least one embodiment.

[0014] FIGS. **6**A, **6**B, **6**C, and **6**D are schematic diagrams of cross-sections taken from the same location as A**1**-A**1** in FIG. **1**, illustrating states in manufacturing of the organic EL display panel **10**, according to at least one embodiment.

[0015] FIGS. **7**A, **7**B, **7**C, and **7**D are schematic diagrams of cross-sections taken from the same location as A**1**-A**1** in FIG. **1**, illustrating states in manufacturing of the organic EL display panel **10**, according to at least one embodiment.

[0016] FIGS. **8**A, **8**B, **8**C, **8**D, and **8**E are schematic diagrams of cross-sections taken from the same location as A**1**-A**1** in FIG. **1**, illustrating states in manufacturing of the organic EL display panel **10**, according to at least one embodiment.

[0017] FIGS. **9**A, **9**B, **9**C, and **9**D are schematic diagrams of cross-sections taken from the same location as A**1**-A**1** in FIG. **1**, illustrating states in manufacturing of the organic EL display panel **10**, according to at least one embodiment.

[0018] FIGS. **10**A and **10**B are schematic diagrams of cross-sections taken from the same location as A**1**-A**1** in FIG. **1**, illustrating states in manufacturing of the organic EL display panel **10**, according to at least one embodiment.

[0019] FIGS. **11**A, **11**B, and **11**C are diagrams of cross-sections of light-emitting elements **100** in the organic EL display panel **10**, in which optical distances between light emission reference points and the light shielding film **133** are different.

[0020] FIGS. **12**A and **12**B are enlarged schematic diagrams of cross-sections of light-emitting elements of reference examples in which widths of openings **133***a* of a light shielding film **133** are different.

[0021] FIG. **13** is a schematic block diagram illustrating circuit structure of an organic EL display device according to at least one embodiment.

[0022] FIG. **14** is a schematic circuit diagram illustrating circuit structure of a sub-pixel **100***se* of the organic EL display panel **10** used in an organic EL display device according to at least one embodiment.

[0023] FIG. **15** is a schematic diagram of a cross-section taken from the same location as line A**1**-A**1** in FIG. **1** from an organic EL display panel **10**A according to Modification 1.

[0024] FIGS. **16**A, **16**B, **16**C, **16**D, **16**E, **16**F, and **16**G are schematic diagrams of cross-sections taken from the same location as line A**1**-A**1** in FIG. **1**, illustrating states in manufacture of a front plate of the organic EL display panel **10**A according to Modification 1.

[0025] FIG. **17** is a schematic diagram of a cross-section taken from the same location as line A**1**-A**1** in FIG. **1** from an organic EL display panel **10**B according to Modification **2**.

[0026] FIGS. **18**A, **18**B, **18**C, **18**D, **18**E, and **18**F are schematic diagrams of cross-sections taken from the same location as line A**1**-A**1** in FIG. **1**, illustrating states in manufacture of a light shielding film of a front plate of the organic EL display panel **10**B according to Modification 2.

[0027] FIG. **19** is a schematic diagram of a cross-section taken from the same location as line A**1**-A**1** in FIG. **1** from an organic EL display panel **10**C according to Modification 3.

[0028] FIG. **20** is a schematic diagram of a cross-section taken from the same location as line A**1**-A**1** in FIG. **1** from an organic EL display panel **10**D according to Modification 4.

[0029] FIG. **21** is a schematic diagram of a cross-section taken from the same location as line A**1**-A**1** in FIG. **1** from an organic EL display panel **10**E according to Modification 5.

[0030] FIG. **22** is a schematic diagram of a cross-section taken from the same location as line A**1**-A**1** in FIG. **1** from an organic EL display panel **10**F according to Modification 6.

[0031] FIG. **23** is a schematic diagram of a cross-section taken from the same location as line A**1**-A**1** in FIG. **1** from an organic EL display panel **10**G according to Modification 7.

[0032] FIG. **24** is a schematic diagram of a cross-section taken from the same location as line A**1**-A**1** in FIG. **1** from an organic EL display panel **10**J according to Modification 8.

[0033] FIG. **25** is a graph illustrating a relationship between wavelength and a refractive index n for a material of a light-adjusting layer **127**J.

[0034] FIG. **26** is a schematic diagram of a cross-section taken from the same location as line A**1**-A**1** in FIG. **1** from an organic EL display panel **10**I according to Modification 9.

[0035] FIG. **27** is a graph of measurement results of film thickness of functional layers up to a light-emitting layer **123** in a cross-section taken along a row direction of the organic EL display panel **10**.

[0036] FIG. **28** is a graph of measurement results of chromaticity (y value) distribution measured at positions corresponding to the line A**1**-A**1** in FIG. **1** in sub-pixels of an organic EL display panel.

[0037] FIG. **29** is a schematic diagram of a cross-section taken from the same location as line A**1**-A**1** in FIG. **1** from an organic EL display panel **10**H according to Modification 10.

[0038] FIG. **30** is a diagram illustrating light interference in an optical resonator structure of the organic EL display panel **10** according to at least one embodiment.

[0039] FIG. **31** is a schematic diagram of a cross-section taken along a row direction of a pixel of an organic EL display panel.

DETAILED DESCRIPTION

Background to Disclosure

[0040] There are technical problems with the structure described in JP 2008-226747, in that when the organic EL display panel is viewed from an oblique direction, the shielding of part of a self-luminous area of each sub-pixel by the grid-shaped light-shielding film causes a change in chromaticity of a displayed image, and in a high definition organic EL display panel, it is difficult to sufficiently reduce such a change in chromaticity.

[0041] FIG. **31** is a schematic diagram of a cross-section taken in a row direction (X direction in FIG. **31**) of a pixel of an organic EL display panel **10**X. In the organic EL display panel **10**X, one pixel includes light-emitting elements **23**R, **23**G, **23**B arranged side by side in the row direction that emit RGB colors of light and are partitioned from each other by banks **22** that extend in a column direction (Y direction in FIG. **31**) on a surface of a substrate **1***x*. The light-emitting elements **23**R, **23**G, **23**B and the banks **22** are covered with a sealing layer **26** made of an inorganic material, and the substrate **1***x* is joined to an upper substrate **30** via a joining layer **27** made of a resin material. The substrate **1***x* is separated from the upper substrate **30** by a distance Ly. The upper substrate **30** is provided with a light-shielding film **33** containing a black pigment that has openings corresponding to the light-emitting elements **23**R, **23**G, **23**B. Likewise, color filter layers **32**R, **32**G, **32**B in the openings correspond to the light-emitting elements **23**R, **23**G, **23**B.

[0042] In the display panel **10**X, when a width of light-emitting elements is Wel (WelR, WelG, WelB), a width of openings of the light shielding film **133** is Wbm (WbmR, WbmG, WbmB), and a distance between a light emission

reference point and the light shielding film **133** is Ly, the widths WbmR, WbmG, WbmB of the openings of the light shielding film **133** are greater than the corresponding widths WelR, WelG, WelB of the light-emitting elements **23**R, **23**G, **23**B. Light is emitted upwards (Z direction in FIG. **31**) from the light-emitting elements **23**.

[0043] When the display panel **10**X is viewed from a direction of line of sight C with a viewing angle α, a light shielding width is Lx (LxR, LxG, LxB), and therefore a light shielding ratio with respect to the light-emitting element width Wel is Lx/Wel. Thus, a rate of reduction of luminance from the light-emitting element **23** visually recognized by a viewer increases as the light shielding ratio increases. When the rate of reduction of luminance is different among the light-emitting elements **23**R, **23**G, **23**B, luminance balance from light-emitting elements **100**R, **100**G, **100**B changes, and therefore chromaticity visually recognized by a viewer changes. When viewed from an oblique angle, this appears as a chromaticity shift in grays and midtones.

[0044] In response to this problem, JP 2011-40352, for example, proposes a technique of intentionally making light-shielding ratios of the light-emitting elements **23**R, **23**G, **23**B different, by making gaps between the banks **22** partitioning the light-emitting elements **100** different and making sizes of openings of the grid-shaped light-shielding film **33** different, in order to compensate for and reduce visually recognized chromaticity changes from an oblique viewing angle. However, in a study by the inventor, it was found that in a high definition organic EL display panel, there is a problem with the method described in JP 2011-40352 in that it is difficult to sufficiently reduce changes in chromaticity visually recognized when viewed from an oblique viewing angle, due to the increase in pixel density and decrease in area of each light-emitting element **23**.

[0045] For example, when an opening area of the grid-shaped light shielding film **33** is reduced relative to the banks **22**, it may be difficult to align the light shielding film **33** on the upper substrate **30** to the light-emitting elements **100** when joining the upper substrate **30** to the substrate **1***x*. Further, when an opening area of the grid-shaped light-shielding film **33** is increased relative to the banks **22**, an increase in opening width Wbm is limited by a minimum line width of the light-shielding film **33**, and it may not be possible to sufficiently reduce the light-shielding ratio.

[0046] Further, light-shielding ratios of the light-emitting elements **23**R, **23**G, **23**B at the viewing angle α are different due to structural differences, and this may cause changes in chromaticity visually recognized by a viewer.

[0047] The present disclosure is made in view of the problems described above, and an object of the present disclosure is to provide a self-luminous display panel capable of high definition and a reduction in change of chromaticity of emitted light when a display image is viewed from an oblique viewing angle.

[0048] In order to solve the technical problems, the inventor extensively studied structures of self-luminous display panels capable of high definition and reduced chromaticity changes of emitted light when a display image is viewed from a viewing angle 45° or more from the front, and arrived at the self-luminous display panel pertaining to at least one embodiment of the present disclosure.

[0049] The self-luminous display panel pertaining to at least one embodiment of the present disclosure is capable of high definition and reduced chromaticity changes of emitted light when a display image is viewed from an oblique viewing angle.

[0050] Such technical problems are not limited to organic EL display panels that use organic EL elements as light-emitting elements. Similar technical problems occur in any display panel that includes self-luminous light-emitting elements in which a wet process is used to form an organic functional layer to construct an optical resonator structure, such as inorganic EL display panels in which light-emitting layers are made of inorganic materials, quantum dot display panels in which light-emitting layers are made of quantum dot light-emitting elements (quantum dot light-emitting diodes (QLED)), and the like.

Overview of Embodiments of Present Disclosure

[0051] A self-luminous display panel according to at least one embodiment of the present disclosure is a self-luminous display panel in which pixels composed of sub-pixels are arranged, including light-emitting elements and a light-shielding film. The light-emitting elements correspond one-to-one with the sub-pixels, each sub-pixel in a pixel emitting a different color of light. The light-shielding film is provided with openings at positions corresponding to the light-emitting elements in plan view, downstream in a light emission direction of the light-emitting elements. Optical distances between the light-shielding film and light emission reference points of the light-emitting elements are different, depending on light emission color of the light-emitting elements.

[0052] According to this structure, in a high definition organic EL display panel, even when pixel density is increased and unit areas of the light-emitting elements are decreased, a self-luminous display panel structure can be realized that reduces changes in chromaticity of emitted light when a display image is viewed from an oblique angle of 45° or more from the front.

[0053] According to at least one embodiment, the optical distances are each a maximum distance in the light emission direction between an edge of one of the openings of the light-shielding film, and one of the light emission reference points of a corresponding one of the light-emitting elements.

[0054] According to this structure, light-shielding width and light-shielding ratio can be controlled independently of relative positions of the light-emitting elements and the openings of the light-shielding film. Thus, even when light-shielding widths and light-shielding ratios are different depending on the light emission color of the light-emitting elements, the margin for error for alignment of the light-shielding film on the front plate to the sub-pixels on the substrate when joining the front plate to the back panel does not change. Further, a problem of being unable to sufficiently reduce shielding ratio due a need to ensure a minimum line width of the light-shielding film does not occur. As a result, in a high definition organic EL display panel, even when pixel density is increased and unit areas of the light-emitting elements are decreased, a self-luminous display panel structure can be realized that reduces changes in chromaticity of emitted light when a display image is viewed from an oblique angle.

[0055] According to at least one embodiment, positions in the light emission direction of top edges of the openings of the light-shielding film corresponding to the light-emitting elements are different, depending on the light emission color of the light-emitting elements.

[0056] According to at least one embodiment, positions in the light emission direction of the light emission reference points of the light-emitting elements are different, depending on the light emission color of the light-emitting elements.

[0057] According to these structures, optical distances from the light emission reference points of the light-emitting elements to the light-shielding film can be configured to be different depending on the light emission color of the light-emitting elements.

[0058] According to at least one embodiment, the self-luminous display panel further includes a light-adjusting film between the light-emitting elements and the light-shielding film in the light emission direction. The light-adjusting film has areas corresponding to the light-emitting elements in plan view, and a refractive index of the light-adjusting film is different for different areas, depending on light emission color of the light-emitting elements.

[0059] According to this, a display panel structure can be implemented that reduces changes in chromaticity visually recognized from an oblique viewing angle, by arrangement of a light-adjusting film in the light-emitting element sections. Further, light extraction efficiency can be improved by adopting the optical resonator structure in which a boundary between the light-adjusting film and the sealing layer is a third reflective interface.

[0060] According to at least one embodiment, the self-luminous display panel further includes a light-adjusting film between the light-emitting elements and the light-shielding film in the light emission direction, the light-adjusting film being common to a plurality of the light-emitting elements that emit different colors of light. A refractive index of the light-adjusting film is different for different wavelengths of light emitted by the light-emitting elements.

[0061] This structure reduces changes in chromaticity visually recognized from an oblique viewing angle. Further, by making the refractive index of the light-adjusting film different for different light-emitting elements, the differences in light shielding ratios of the light-emitting elements can be more finely compensated for, and changes in visual recognition of chromaticity when viewed from an oblique angle can thereby be more accurately reduced.

[0062] According to at least one embodiment, the light-shielding film is composed of portions of color filter layers overlapping in plan view above boundaries between the light-emitting elements, where the color filter layers correspond one-to-one with the light-emitting elements.

[0063] According to this structure, by implementing changes in a direction that cancels out differences in light-shielding ratio of the light-emitting elements, changes in visual recognition of chromaticity when viewed from an oblique angle can be reduced.

[0064] According to at least one embodiment, the pixels are arranged in a matrix of rows and columns, the light-emitting elements have different lengths in a row or column direction depending on the light emission color of the light-emitting elements, and among the light-emitting elements of each pixel, a first light-emitting element that has a larger length in the row or column direction has a larger value among the optical distances than a second light-emitting element that has a smaller length in the row or column direction.

[0065] According to this structure, changes in chromaticity visually recognized from an oblique viewing angle can be reduced by arrangement of a light-adjusting film in the front plate.

[0066] According to at least one embodiment, the pixels are arranged in a matrix of rows and columns, the light-emitting elements have different light emission distributions in a row or column direction depending on the light emission color of the light-emitting elements, and among the light-emitting elements of each pixel, a first light-emitting element that has a light emission distribution shape that has a larger half maximum luminance range has a smaller value among the optical distances than a second light-emitting element that has a light emission distribution shape that has a smaller half maximum luminance range.

[0067] According to this structure, a change in visually recognized chromaticity when viewed from an oblique direction is reduced, where the change is due to differences in luminance of each color of light-emitting element causing differences in visually recognized luminance distribution among the light-emitting elements that have the same apparent light-shielding ratio when viewed from the oblique direction.

[0068] According to at least one embodiment, the pixels are arranged in a matrix of rows and columns, and in plan view, in a row direction, a column direction, or both the row and column directions, the openings of the light-shielding film each include the light-emitting element corresponding to the opening, and a distance between an edge of the opening and the light-emitting element is the same among the light-emitting elements, regardless of the light emission color of the light-emitting elements.

[0069] According to this structure, light-shielding width and light-shielding ratio can be controlled independently of relative positions of the light-emitting elements and the openings of the light-shielding film. Thus, even when light-shielding widths and light-shielding ratios are different depending on the light emission color of the light-emitting elements, the margin for error for alignment of the light-shielding film on the front plate to the sub-pixels on the substrate when joining the front plate to the back panel does not change.

[0070] According to at least one embodiment, the pixels are arranged in a matrix of rows and columns, the light-emitting elements of each pixel are arranged in a line in the row direction, banks extending in the column direction are disposed between the light-emitting elements in the row direction, each of the light-emitting elements includes a light-emitting layer including an applied film disposed in a gap between the banks, and each of the light-emitting layers includes a flat portion that has a substantially uniform film thickness disposed in a range that includes a center point in the row direction of the gap between the banks, and pinning portions disposed on either side of the flat portion in the row direction that have a larger film thickness than the flat portion.

[0071] According to this structure, light-shielding ratios when viewed from an oblique viewing angle are such that the light-shielding ratio in the row direction is greater than the light-shielding ratio in the column direction, and a chromaticity change visually recognized from the oblique viewing angle also changes more in the row direction than in the column direction. Thus, a structure of a display panel can be implemented that effectively reduces changes in

chromaticity visually recognized from an oblique direction by, for example, providing thickened portions around edges of openings of the light-shielding film.

[0072] According to at least one embodiment, a difference in chromaticity between chromaticity observed from a viewing angle of 45° from the front of the display panel in the row direction and chromaticity observed from a viewing angle of 45° from the front of the display panel in the column direction is from 0 to 0.02, where the difference in observed chromaticity is caused by a portion of light emitted from each light-emitting element being shielded by an edge of the opening of the light shielding film.

[0073] According to this structure, it is possible to reduce a change in chromaticity visually recognized from an oblique viewing angle when opening widths in the row direction and the column direction of each of the openings of the light-shielding film are decreased, causing light-shielding ratios to increase.

[0074] According to at least one embodiment, luminance observed from a viewing angle of 45° from the front of the display panel in the column direction is 103% or more of luminance observed from a viewing angle of 45° from the front of the display panel in the row direction, where a difference in observed luminance is caused by a portion of light emitted from each light-emitting element being shielded by the edge of the opening of the light-shielding film.

[0075] According to this structure, a structure of a display panel can be implemented that more accurately compensates for changes in chromaticity visually recognized when viewed from an oblique angle due to different light-shielding ratios among light-emitting elements when the light-emitting layers of the light-emitting elements are applied films elongated and continuous in the column direction in gaps between column banks.

Embodiment

<Overall Structure of Organic EL Display Panel **10**>

[0076] The following describes an organic EL display panel **10** (also referred to as "display panel **10**") pertaining to the present embodiment, with reference to the drawings. Note that the drawings are schematic diagrams and are not necessarily to scale. FIG. **1** is a plan view diagram of the display panel **10** according to at least one embodiment.

[0077] The display panel **10** has a top-emission structure in which light is emitted from a top surface thereof, and in which organic EL elements **100**, which constitute pixels, are arranged on a substrate **100***x* (TFT substrate) including thin film transistors (TFTs). Here, in the present description, the X direction, Y direction, and Z direction in the drawings represent a row direction, column direction, and thickness direction of the display panel **10**, respectively.

[0078] As illustrated in FIG. **1**, the display panel **10** includes light-emitting elements **100**R, **100**G, and **100**B arranged in a matrix on the substrate **100***x* (also referred to as "light-emitting elements **100**"), defined by column banks **122**Y and row banks **122**X (also referred to as "banks **122**") arranged in a partitioned area **10***e* (also referred to as "area **10***e*"). The light-emitting elements **100**R, **100**G, **100**B includes corresponding self-luminous areas **100**aR, **100**aG, **100**aB that emit a corresponding color of light (red, green, or blue) (also referred to as "self-luminous areas **100***a*"). Each of the light-emitting elements **100** correspond to a sub-pixel **100***se*, which is a light-emitting unit. A unit pixel **100***e* includes three of the sub-pixels **100***se* arranged in a row. In the area **10***e* of the display panel **10**, the unit pixels **100***e* are arranged in a matrix of rows and columns.

[0079] Further, as illustrated in FIG. **1**, in the display panel **10**, pixel electrodes **119** are arranged in a matrix of rows and columns on the substrate **100***x*, separated from each other by defined distances in the row and column directions. Each of the pixel electrodes **119** has a rectangular shape in plan view and is made of a light-reflective material. The pixel electrodes **119** are arranged so that three of the pixel electrodes **119** in a row along the row direction correspond to three of the self-luminous areas **100***a*: **100**aR, **100**aG, and **100**aB. Lengths **119***x* in the row direction of the pixel electrodes **119** are configured such that the length **119***x* of the pixel electrodes **119** corresponding to the light-emitting elements **100**B is longest, the length **119***x* of the pixel electrodes **119** corresponding to the light-emitting elements **100**R is shortest, and the length **119***x* of the pixel electrodes **119** corresponding to the light-emitting elements **100**G is between these two values. Areas of the self-luminous areas **100**aB, **100**aG, **100**aR have the same relationship of relative sizes.

[0080] In the display panel **10**, the banks **122** have a line-shaped bank structure. Between every two adjacent pixel electrodes **119** in the row direction is a column bank **122**Y that extends in the column direction (Y direction in FIG. **1**).

[0081] Similarly, between every two adjacent pixel electrodes **119** in the column direction is a row bank **122**X that extends in the row direction (X direction in FIG. **1**). Areas in which the row banks **122**X are present are areas in which organic electroluminescence does not occur in the light-emitting layers **123**, and are therefore referred to as non-self-luminous areas **100***b*.

[0082] Gaps between the column banks **122**Y corresponding to the self-luminous areas **100**aR are referred to as red gaps **122**zR, gaps corresponding to the self-luminous areas **100**aG are referred to as green gaps **122**zG, and gaps corresponding to the self-luminous areas **100**aB are referred to as blue gaps **122**zB (gaps between the column banks **122**Y may also be referred to as "gaps **122***z*").

[0083] Further, as illustrated in FIG. **1**, in the display panel **10**, the self-luminous areas **100***a* and the non-self-luminous areas **100***b* are arranged to alternate in the column direction alongside the gaps **122***z*. Contact recesses **119***c* (in contact holes **118***a*) are provided in the non-self-luminous areas **100***b* to connect the pixel electrodes **119** to TFT sources S_1.

<Components of display panel **10**>

[0084] The following describes structure of the organic EL elements **100** in the display panel **10**, with reference to FIG. **2** and FIG. **3**. FIG. **2** and FIG. **3** are schematic diagrams of cross-sections taken along lines A**1**-A**1** and A**2**-A**2** in FIG. **1**.

[0085] In the display panel **10** pertaining to the present embodiment, a substrate on which thin film transistors are formed (a TFT substrate) is formed as a substrate in the Z axis direction, and an organic EL element section is formed thereon.

(Light-Emitting Element Section)

[Substrate **100***x*]

[0086] The substrate **100***x* is a support member of the display panel **10** and includes a base (not illustrated) and a thin film transistor layer (not illustrated) on the base.

[0087] The base is a support member of the display panel **10**, and is a flat plate. As a material of the base, an electrically insulating material such as a glass material, a resin material, a semiconductor material, a metal material coated with an insulating layer, or the like can be used.

[0088] TFT circuitry electrically connects the pixel electrodes **119** to an external power source according to a drive signal from a circuit external to the light-emitting elements **100**. The TFT layer is a multi-layer structure including an electrode, a semiconductor layer, an insulating layer, and the like formed on a top surface of the base. According to the present embodiment, the TFT layer includes multiple TFTs and wiring formed on the top surface of the base. The wiring electrically connects the pixel electrodes **119** corresponding to the TFT sources S_1, an external power source, an external circuit, and the like.

[Planarizing Layer **118**]

[0089] The planarizing layer **118** is disposed on a top surface of the base and TFT layer. The planarizing layer **118** disposed on the top surface of the substrate **100***x* planarizes the top surface of the substrate **100***x* that is uneven due to the TFT layer, filling spaces between the wiring and the TFTs, and electrically insulating between the wiring and the TFTs.

[0090] In order to connect the pixel electrodes **119** to the wiring connected to the TFT sources S_1, the contact holes **118***a* corresponding to the pixel electrodes **119** are formed in the planarizing layer **118** above part of the wiring.

[Pixel Electrodes **119**]

[0091] As illustrated in FIG. **2** and FIG. **3**, the pixel electrodes **119** correspond one-to-one with the sub-pixels **100***se* and are disposed on the planarizing layer **118** in the area **10***e* of the substrate **100***x*.

[0092] The pixel electrodes **119** supply carriers to the light emitting layers **123**. For example, if functioning as anodes, the pixel electrodes **119** supply holes to the light-emitting layers **123**. The display panel **10** is a top-emission type of display panel, and the pixel electrodes **119** are light-reflective. The pixel electrodes **119** each have, for example, a substantially rectangular flat plate shape in plan view. According to the present embodiment, as described above, the lengths **119***x* (B), (G), (R) in the row direction of the pixel electrodes **119** of the light-emitting elements **100**B, **100**G, **100**R are configured from longest (B) to shortest (R). Thus, current density of the light-emitting layers **123** goes from least to most in the order of light-emitting elements **100**B, **100**G, **100**R, compensating for differences in element life of the light-emitting elements **100** of each color.

[0093] The connecting recesses **119***c* of the pixel electrodes **119** are formed by recessing portions of the pixel electrodes **119** in the direction of the substrate **100***x* in the contact holes of the planarizing layer **118**. Bottoms of the connecting recesses **119***c* connect to wiring connected to TFT sources S_1 corresponding to the pixel electrodes **119**.

[Hole Injection Layers **120**]

[0094] Hole injection layers **120** are laminated on the pixel electrodes **119** as illustrated in FIG. **2** and FIG. **3**. The hole injection layers **120** have a function of transporting holes injected from the pixel electrode layers **119** to hole transport layers **121**.

[0095] The hole injection layers **120** each include a lower layer made of a metal oxide formed on the pixel electrodes **119** and an upper layer made of an organic material laminated on the lower layer in the gaps **122**zR, **122**zG, **122**zB. The upper layers formed in the RGB sub-pixels have different film thicknesses depending on RGB sub-pixel color.

[0096] According to the present embodiment, as illustrated in FIG. **3**, the hole injection layers **120** extend linearly in the column direction in the gaps **122**zR, **122**zG, **122**zB.

[Banks **122**]

[0097] As illustrated in FIG. **2**, banks made of an insulating material cover edges of the pixel electrodes **119** and the hole injection layers **120**. The banks include the column banks **122**Y that extend in the column direction and are arranged side-by-side in the row direction and the row banks **122**X that extend in the row direction and are arranged side-by-side in the column direction.

[0098] The column banks **122**Y each have a line-like shape extending in the column direction, and in a cross-section taken parallel to the row direction the column banks **122**Y each have a tapered trapezoid shape that tapers upwards. The column banks **122**Y define outer edges in the row direction of the light-emitting layers **123** formed as ink containing organic compounds that are materials of the light-emitting layers **123** is blocked by the column banks **122**Y from flowing in the row direction. Further, base portions in the row direction of the column banks **122**Y define edges of the self-luminous areas **100***a* of the sub-pixels **100***se* in the row direction.

[0099] The row banks **122**X each have a line-like shape extending in the row direction, and in a cross-section taken parallel to the column direction the row banks **122**X each have a tapered trapezoid shape that tapers upwards. The row banks **122**X extend through the column banks **122**Y, and each has a top surface that is lower in height than a top surface **122**Yb of the column banks **122**Y. Thus, the row banks **122**X and the column banks **122**Y form openings that correspond to the self-luminous areas **100***a*.

[Hole Transport Layers **121**]

[0100] As illustrated in FIG. **2** and FIG. **3**, the hole transport layers **121** are laminated on the hole injection layers **120** in the gaps **122**zR, **122**zG, **122**zB. The hole transport layers **121** also cover the hole injection layers **120** over the row banks **122**X. The hole transport layers **121** are in direct contact with the hole injection layers **120**. The hole transport layers **121** have a function of transporting holes injected from the hole injection layers **120** to the light emitting layers **123**. According to at least one embodiment, the hole transport layers **121**R, **121**G, **121**B (also referred to as "hole transport layers **121**") of the RGB sub-pixels have different film thicknesses according to the color of sub-pixel.

[0101] According to the present embodiment, the hole transport layers **121** extend in the column direction along the gaps **122***z*.

[Light-Emitting Layers **123**]

[0102] The light-emitting layers **123** are laminated on the hole transport layers **121**, as illustrated in FIG. **2** and FIG. **3**. The light-emitting layers **123** are made of organic compounds, and have a function of emitting light due to internal recombination of holes and electrons. In the gaps **122**zR,

122zG, **122**zB defined by the column banks **122**Y, the light emitting layers **123**R, **123**G, **123**B each have a line-like shape extending in the column direction.

[0103] In the different colors of the sub-pixels **100***se* are different colors of the light-emitting layers **123** between the pixel electrodes **119** and the counter electrode **125**, forming optical resonator structures in which light from the light-emitting layers **123** resonates and is emitted from the counter electrode **125** side. The optical resonator structures are structures with optical distances between the top surfaces of the light-emitting layers **123** and the top surfaces of the pixel electrodes **119** set according to wavelengths of light emitted from the light-emitting layers **123**R, **123**G, **123**B, such that light components corresponding to these colors are strengthened by constructive interference.

[0104] Only portions of the light-emitting layers **123** to which carriers are supplied from the pixel electrodes **119** emit light, and therefore electroluminescence of organic compounds does not occur in the non-self-luminous areas **100***b* where the row banks **122**X are present, as the row banks **122**X are inter-layer insulators. Thus, areas of the light-emitting layers **123** where the row banks **122**X are not present are the self-luminous areas **100***a*, and areas above side and top surfaces **122**Xb of the row banks **122**X are the non-self-luminous areas **100***b*.

[0105] As previously described, in the different colors of the sub-pixels **100***se* are different colors of the light-emitting layers **123** between the pixel electrodes **119** and the counter electrode **125**, forming optical resonator structures in which light from the light-emitting layers **123** resonates and is emitted from the counter electrode **125** side. In other words, light emitted from each of the light-emitting layers **123**R, **123**G, **123**B, reflected by the pixel electrodes **119**, and emitted upwards through the counter electrode **125** constructively interferes with light emitted from each of the light-emitting layers **123**R, **123**G, **123**B directly upwards through the counter electrode **125** to be mutually strengthened. Thus, in order to set the optical distances between the top surfaces of the light-emitting layers **123** and the top surfaces of the pixel electrodes **119** according to wavelengths of light emitted from the light-emitting layers **123**R, **123**G, **123**B to achieve constructive interference of light components of corresponding colors, film thicknesses of the light-emitting layers **123**R, **123**G, **123**B and the hole transport layers **121**R, **121**G, **121**B are made to be different for each color of sub-pixel.

[0106] The light-emitting layers **123** extend continuously not just in the self-luminous areas **100***a*, but also in the non-self-luminous areas **100***b* that are adjacent. When the light-emitting layers **123** are formed, ink applied to the self-luminous areas **100***a* can flow in the column direction via ink applied to the non-self-luminous areas **100***b*, which can even out film thickness among pixels in the column direction. However, in the non-self-luminous areas **100***b*, the row banks **122**X suppress ink flow by an appropriate amount. Accordingly, a large amount of unevenness in film thickness is unlikely to occur, improving evenness of luminance for the pixels.

[Electron Transport Layer **124**]

[0107] As illustrated in FIG. **2** and FIG. **3**, the electron transport layer **124** covers the column banks **122**Y and the light-emitting layers **123** in the gaps **122***z* defined by the column banks **122**Y. The electron transport layer **124** is continuous across at least an entire display area of the display panel **10**. The electron transport layer **124** has a function of transporting electrons from the counter electrode **125** to the light emitting layers **123** and a function of restricting injection of electrons into the light emitting layers **123**.

[Counter Electrode **125**]

[0108] As illustrated in FIG. **2** and FIG. **3**, the counter electrode **123** is formed on the electron transport layer **124**. The counter electrode **125** is an electrode common to all of the light-emitting layers **123**. The counter electrode **125** is paired with the pixel electrodes **119** to form energization paths sandwiching the light emitting layers **123**. The counter electrode **125** supplies carriers to the light emitting layers **123**, for example, when functioning as a cathode, the counter electrode **125** supplies electrons to the light emitting layers **123**.

[Sealing Layer **126**]

[0109] The sealing layer **126** is laminated on the counter electrode **125** so as to cover the counter electrode **125**. The sealing layer **126** is for preventing the light emitting layers **123** from deteriorating due to contact with moisture, air, or the like. The sealing layer **126** is disposed to cover the top surface of the counter electrode **125**. The sealing layer must be highly light-transmissive in order to secure good light extraction as a display.

(Materials of Light-Emitting Element Section)

[0110] Examples of materials of each of the light-emitting element sections are provided below.

[Substrate **100***x* (TFT Substrate)]

[0111] As the base, for example, a glass substrate, a quartz substrate, a silicon substrate, a metal substrate such as molybdenum sulfide, copper, zinc, aluminum, stainless steel, magnesium, iron, nickel, gold, silver, or the like, a semiconductor substrate such as gallium arsenide, a plastic substrate, or the like can be used.

[0112] The TFT layer includes TFT circuits formed on the base, an inorganic insulating layer (not illustrated) formed on the TFT circuits, and the planarization layer **118**. Each TFT circuit has a multilayer structure including an electrode, a semiconductor layer, and an insulating layer formed on a top surface of the base.

[0113] Known materials can be used for gate electrodes, gate insulating layers, channel layers, channel protective layers, source electrodes, drain electrodes, and the like that are included in the TFT layer.

[0114] As a material of the planarizing layer **118**, an organic compound such as a polyimide resin, an acrylic resin, a siloxane resin, a novolac resin, or the like can be used.

[Pixel Electrodes **119**]

[0115] The pixel electrodes **119** are made of a metal material. In the case of a top-emission type of display panel, such as the display panel **10** pertaining to the present embodiment, chromaticity is adjusted and brightness is increased for emitted light due to adoption of the optical resonator structure in which film thicknesses are appropri-

ately set, and therefore surface portions of the pixel electrodes **119** have high reflectivity. According to the display panel **10** pertaining to the present embodiment, the pixel electrodes **119** each have a structure comprising multiple layers selected from metal layers, composite layers, and light-transmissive electrically conductive layers. According to at least one embodiment, a metal layer is made of a material having a small sheet resistance and high light reflectivity, for example, a metal material including aluminum (Al). An aluminum (Al) alloy has a high reflectance of 80% to 95% and a low electrical resistivity of 2.82×10^{-8} (10 nΩm), and is suitable as a material of the pixel electrode **119**. Further, in view of cost, a metal layer or alloy layer according to at least one embodiment includes aluminum as a main component.

[0116] Aside from aluminum, in view of high reflectance, a metal layer or alloy layer according to at least one embodiment is made of silver or an alloy including silver.

[Hole Injection Layers **120**]

[0117] The hole injection layers **120** include, for example, an oxide of silver (Ag), molybdenum (Mo), chromium (Cr), vanadium (V), tungsten (W), nickel (Ni), iridium (Ir), or the like. If the hole injection layers **120** are made of a transition metal oxide, multiple valences are taken, achieving a plurality of energy levels, and as a result, hole injection can be facilitated and drive voltage can be reduced.

[0118] According to at least one embodiment, the hole injection layers **120** are each a tungsten oxide layer having a film thickness from 2 nm to 30 nm. According to the present embodiment, the film thickness is 10 nm. According to at least one embodiment, the hole injection layers **120** are made of tungsten oxide, but also contain a trace amount of impurities.

[0119] According to at least one embodiment, the hole injection layers **120** are made from a coating applied as an organic polymer solution of a conductive polymer material such as poly(3,4-ethylenedioxythiophene) polystyrene sulfonate (PEDOT:PSS).

[Banks **122**]

[0120] According to at least one embodiment, the banks **122** are made using an organic material such as a resin and are electrical insulators. Examples of the organic material used in forming the banks **122** include acrylic resin, polyimide resin, novolac phenolic resin, or the like. According to at least one embodiment, the banks **122** have organic solvent resistance. According to at least one embodiment, acrylic resin is used. Acrylic resin has a low refractive index and is suitable as a reflector.

[0121] Alternatively, when an inorganic material is used for the banks **122**, according to at least one embodiment, silicon oxide (SiO) is used in view of the refractive index. According to at least one embodiment, silicon nitride (SiN), silicon oxynitride (SiON), or the like is used as an inorganic material.

[0122] Further, according to at least one embodiment, surfaces are treated with fluorine to impart water repellency. According to at least one embodiment, a material containing fluoride is used in forming the banks **122**. Further, in order to reduce water repellency on a surface of the banks **122**, according to at least one embodiment, the banks **122** are irradiated with ultraviolet light and baked at a low temperature.

[Hole Transport Layers **121**]

[0123] For the hole transport layers **121**, for example, a polyfluorene or a derivative thereof, a polymer compound such as a polyarylamine, which is an amine organic polymer, or a derivative thereof, poly(9,9-di-n-octylfluorene-alt-(1,4-phenylene-((4-sec-butylphenyl)imino)-1,4-phenylene) (TFB), or the like can be used.

[Light-Emitting Layers **123**]

[0124] Each of the light emitting layers **123** has a function of emitting light generated by an excited state caused by recombination of injected holes and electrons when a voltage is applied. As a material of the light-emitting layers **123**, a light-emitting organic material that can be formed into a film by a wet printing method is required.

[0125] In particular, for example as disclosed in JP H5-163488 and according to at least one embodiment, the light emitting layers **122** are formed by using a fluorescent substance such as an oxinoid compound, perylene compound, coumarin compound, azacoumarin compound, oxazole compound, oxadiazole compound, perinone compound, pyrrolo-pyrrole compound, naphthalene compound, anthracene compound, fluorene compound, fluoranthene compound, tetracene compound, pyrene compound, coronene compound, quinolone compound and azaquinolone compound, pyrazoline derivative and pyrazolone derivative, rhodamine compound, chrysene compound, phenanthrene compound, cyclopentadiene compound, stilbene compound, diphenylquinone compound, styryl compound, butadiene compound, dicyanomethylene pyran compound, dicyanomethylene thiopyran compound, fluorescein compound, pyrylium compound, thiapyrylium compound, selenapyrylium compound, telluropyrylium compound, aromatic aldadiene compound, oligophenylene compound, thioxanthene compound, cyanine compound, acridine compound, metal complex of an 8-hydroxyquinoline compound, metal complex of a 2-bipyridine compound, complex of a Schiff base and a group III metal, metal complex of oxine, rare earth metal complex, or the like.

[Electron Transport Layer **124**]

[0126] According to at least one embodiment, an organic material having a high electron transport property is used for the electron transport layer **124**. According to at least one embodiment, the electron transport layer **124** includes a layer made of sodium fluoride. An example of an organic material used for the electron transport layer **124** is a π electron low molecular weight organic material such as an oxadiazole derivative (OXD), a triazole derivative (TAZ), a phenanthroline derivative (BCP, Bphen), or the like.

[0127] Further, according to at least one embodiment, the electron transport layer **124** includes a layer of the organic material doped with a metal dopant selected from alkali metals or alkaline earth metals.

[Counter Electrode **125**]

[0128] The counter electrode **125** is formed by using silver (Ag), aluminum (Al), or the like as a thin film electrode.

[0129] A light-transmissive electrically-conductive material is used for the counter electrode **125**. For example, indium tin oxide (ITO) or indium zinc oxide (IZO) is used.

[Sealing Layer **126**]

[0130] In the case of a top-emission type of display, the sealing layer **126** is made of a light-transmissive material. According to at least one embodiment, silicon nitride (SiN), silicon oxynitride (SiON), or the like is used as the light-transmissive material. Further, according to at least one embodiment, a sealing resin layer made of a resin material such as acrylic resin, silicone resin, or the like is provided on the layer made using silicon nitride (SiN), silicon oxynitride (SiON), or the like.

(Components of Front Plate **131**)

[Upper Substrate **130**]

[0131] The front plate **131**, which includes the upper substrate **130** and the color filter layer **132**, is disposed on and joined to the joining layer **127**. In a top-emission type of display panel, for example, a light-transmissive material such as cover glass, light-transmissive resin film, or the like is used for the upper substrate **130**. Further, the upper substrate **130** can improve rigidity of the display panel **10**, and help prevent intrusion of moisture, air, and the like. As the upper substrate **130**, according to at least one embodiment, a light-transmissive material such as a glass substrate, a quartz substrate, a plastic substrate or the like is used.

[Color Filter Layer **132**]

[0132] The color filter layer **132** is formed on the upper substrate **130** at positions corresponding to each of the self-luminous areas **100***a* of sub-pixels. The color filter layer **132** is a light-transmissive layer that allows transmission of visible light of wavelengths corresponding to R, G, and B and has a function of transmitting light emitted from each color pixel to correct chromaticity of the transmitted light. According to the present embodiment, materials **132**R, **132**G, **132**B of the color filter layer for red, green, and blue are formed above the self-luminous area **100**aR in the red gaps **122**zR, above the self-luminous area **100**aG in the green gaps **122**zG, and above the self-luminous area **100**aB in the blue gaps **122**zB. As the color filter layer **132**, a known resin material (as a commercially available product example, color resists manufactured by JSR Corporation) or the like can be used. According to at least one embodiment, film thickness of the color filter layer **132** is from 1 μm to 4 μm. More specifically, for example, the color filter layer **132** is formed by applying inks each containing a color filter layer material and a solvent to a plurality of openings, on the upper substrate **130**, in order to form the color filter layer **132** as a matrix of sub-pixel units.

[Light-Shielding Film **133**]

[0133] As illustrated in FIG. **2** and FIG. **3**, the openings **133***a* are provided at positions corresponding to the self-luminous areas **100***a* of sub-pixels, and the light-shielding film **133** is formed on the upper substrate **130** to cover positions above the column banks **122**Y corresponding to boundaries in the row direction between the self-luminous areas **100***a* of sub-pixels, and to cover positions above the row banks **122**X corresponding to boundaries in the column direction between the self-luminous areas **100***a* of sub-pixels.

[0134] The light-shielding film **133** is a black resin layer provided to prevent transmission of visible light of wavelengths corresponding to R, G, and B. According to at least one embodiment, the light-shielding film **133** is made of a resin material including black pigment with excellent light absorption and light-shielding properties. According to at least one embodiment, the light-shielding film **133** is made of a resin material that is primarily an ultraviolet curable resin (for example, ultraviolet curable acrylic resin) material to which a light-shielding black pigment is added, such as carbon black pigment, titanium black pigment, metal oxide pigment, organic pigment, or the like.

[0135] In the display panel **10**, a position in an emission direction of an upper end of an edge of an opening of the light-shielding film **133** corresponding to a light-emitting element **100** is different, depending on an emission color of the light-emitting element **100**. Thus, in the display panel **10**, an optical distance between a light emission reference point of the light-emitting element **100** and an upper end of the light-shielding film **133** corresponding to the light-emitting element **100** is different depending on a light emission color of the light-emitting element **100**. According to at least one embodiment, the optical distance is a maximum distance in the emission direction between the light emission reference point of the light-emitting element **100** and an edge of the opening **133***a* of the light-shielding film **133** corresponding to the light-emitting element **100**.

[0136] According to at least one embodiment, the light emission reference point of the light-emitting element **100** is any reference point of a functional layer that allows the light-emitting elements **100**R, **100**G, **100**B to be compared based on the same reference point. According to the present embodiment, the light emission reference point is an edge between the hole injection layer **120** formed by a vapor phase growth method and the hole transport layer **121** formed by an application method. However, the light emission reference point may be, for example, any of a boundary between the hole injection layer **120** and the pixel electrode **119**, a boundary between the hole injection layer **120** and the hole transport layer **121**, and a boundary between the hole transport layer **121** and the light-emitting layer **123**. According to at least one embodiment, the light emission reference point is a center position in the thickness direction of the light-emitting layer **123**, or a position where luminance in the thickness direction of the light-emitting layer **123** is maximum (a light emission center).

[0137] More specifically, in the display panel **10**, the light-shielding film **133** is provided with thickened portions **1331** around the openings **133***a* of base portions **1330** corresponding to the light-emitting elements **100**B. As a result, in the display panel **10**, the optical distance between the light emission reference points of the light-emitting elements **100**B and the light-shielding film **133** corresponding to the light-emitting elements **100**B is larger than the optical distance between the light emission reference points of the light-emitting elements **100**R, **100**G and the light-shielding film **133** corresponding to the light-emitting elements **100**R, **100**G. More specifically, in the display panel **10**, in the emission direction, a maximum distance LB is larger than maximum distances LR, LG, where the maximum distance LB is between a boundary between the hole

injection layer **120** and the hole transport layer **121** of any one of the light-emitting elements **100**B and an edge of the opening **133***a* of the light-shielding film **133** (thickened portion **1331**) corresponding to the light-emitting element **100**B, and each of the maximum distances LR, LG is between a boundary between the hole injection layer **120** and the hole transport layer **121** of any one of the light-emitting elements **100**R, **100**G, respectively, and an edge of the opening **133***a* of the light-shielding film **133** (base portion **1330**) corresponding to the light-emitting element **100**R, **100**G.

[0138] According to at least one embodiment, film thickness of the light shielding film **133** and film thickness of the thickened portion **1331** are each from 1 μm to 2 μm.

[Joining layer **127**]

[0139] Above the sealing layer **126** in the Z axis direction is the front plate **131** including the upper substrate **130** and the color filter layer **132** disposed below the upper substrate **130**. The front plate **131** is joined to the sealing layer **126** by the joining layer **127**. The joining layer **127** has a function of joining the front plate **131** to the layers from the substrate **100***x* to the sealing layer **126**, and has a function of preventing each layer from being exposed to moisture and air. According to at least one embodiment, the joining layer **127** is made of a resin adhesive. According to at least one embodiment, the joining layer **127** is made of a light-transmissive resin material such as acrylic resin, silicone resin, epoxy resin, or the like.

<Method of Manufacturing Display Panel **10**>

[0140] The following describes a method of manufacturing the display panel **10**, with reference to FIG. **4** to FIG. **10**B. FIG. **4** is a flowchart of a method of manufacturing the organic EL display panel **10** according to at least one embodiment. Each of the drawings in FIG. **5**A to FIG. **10**B is a schematic diagram of a cross section taken at a position corresponding to A**1**-A**1** in FIG. **1**, illustrating a state in the method of manufacturing the display panel **10**.

[Preparing Substrate **100***x*]

[0141] The substrate **100***x* is prepared, on which TFTs and wiring are formed. The substrate **100***x* can be manufactured by a known method of manufacturing TFTs (step S**1** in FIG. **4**; FIG. **5**A).

[Forming Planarizing Layer **118**]

[0142] The planarizing layer **118** is formed by coating the substrate **100***x* with a component material (photosensitive resin material) of the planarizing layer **118** as a photoresist, and by planarizing the coated surface (step S**2** in FIG. **4**; FIG. **5**B). More specifically, a resin material having a certain fluidity is applied by, for example, a die coating method along a top surface of the substrate **100***x* so as to fill unevenness of the substrate **100***x* caused by the TFT layer. Thus, the top surface of the planarizing layer **118** is planarized.

[0143] Contact holes (not illustrated) are formed by dry etching of the planarizing layer **118** at locations corresponding to TFT elements, for example above source electrodes. The contact holes are formed by using patterning or the like, so that the bottoms of the contact holes expose top surfaces of the source electrodes.

[0144] Subsequently, connecting electrode layers are formed along inner walls of the contact holes. A portion of each of the connecting electrodes is disposed on the planarizing layer **118**.

[Forming Pixel Electrodes **119**, Hole Injection Layers **120**]

[0145] The following describes forming of the pixel electrodes **119** and the hole injection layers **120** (FIG. **4**, step S**3**).

[0146] After forming the planarizing layer **118**, a surface of the planarizing layer **118** is dry-etched to perform pre-film forming cleaning.

[0147] Next, after pre-film forming cleaning of the planarizing layer **118**, a pixel electrode metal film **119***x* for forming the pixel electrodes **119** is formed on the top surface of the planarizing layer **118** by a vapor phase growth method such as a sputtering method or vacuum deposition method (FIG. **5**C). According to the present embodiment, the metal film **119***x* is made of aluminum or an alloy that is primarily aluminum by using a sputtering method.

[0148] Further, after pre-film forming cleaning of a surface of the metal film **119***x*, a hole injection layer metal film **120'** for forming the hole injection layers **120** is formed on the surface of the metal film **119***x* by a vapor deposition method in a vacuum environment (FIG. **5**D). According to the present embodiment, the metal film **120'** is formed by sputtering tungsten.

[0149] Subsequently, after applying a photoresist layer FR made of a photosensitive resin or the like, a photomask PM provided with defined openings is disposed thereon and irradiated with ultraviolet light to expose the photoresist and transfer the pattern of the photomask to the photoresist (FIG. **6**A). Next, the photoresist layer FR is patterned by developing.

[0150] Next, through the patterned photoresist layer FR, the metal film **120'** is subjected to dry etching processing to perform patterning, forming the hole injection layers **120**.

[0151] Next, through the patterned photoresist layer FR, the metal film **119***x* is subjected to wet etching processing to perform patterning, forming the pixel electrodes **119**.

[0152] According to at least one embodiment, the hole injection layers **120** and the pixel electrodes **119** are processed at the same time by dry etching.

[0153] Finally, the photoresist layer FR is peeled off to leave behind laminated layers of the pixel electrodes **119** and the hole injection layers **120** (FIG. **6**B).

[Forming the Banks **122**]

[0154] After forming the hole injection layers **120**, the banks **122** are formed covering the hole injection layers **120**. In forming the banks **122**, the row banks **122**X are formed first, and subsequently the column banks **122**Y are formed so as to define the gaps **122***z* (FIG. **4**, step S**4**; FIG. **6**C).

[0155] In forming the row banks **122**X, a film made of a material of the row banks **122**X (for example, a photosensitive resin material) is laminated on the hole injection layers **120** and the planarizing layer **118** by using a spin coating method or the like. The film is then patterned to form the row banks **122**X.

[0156] The patterning of the row banks **122**X is achieved by exposure using a photomask above the film, then performing developing and baking steps (at approximately 230° C. for approximately 60 minutes).

[0157] In forming the column banks **122**Y, a film made of a material of the column banks **122**Y (for example, a photosensitive resin material) is laminated on the hole injection layers **120**, the row banks **122**X, and the planarizing layer **118** by using a spin coating method or the like. Then the column banks **122**Y are formed by exposure using a photomask above the film, then developing to form the column banks **122**Yz.

[0158] More specifically, according to at least one embodiment, the method of forming the column banks **122**Y is first to form a photosensitive resin film made of an organic photosensitive resin material such as acrylic resin, polyimide resin, novolac phenolic resin, or the like, then drying the resin film, and after a solvent of the resin film is evaporated to a defined extent, a photomask provided with defined openings is overlaid, and the photomask and photoresist made of the photosensitive resin are irradiated with ultraviolet light, transferring the pattern of the photomask to the photoresist.

[0159] Next, the photosensitive resin is developed and a resulting patterned insulating layer is baked (at approximately 230° C. for approximately 60 minutes) to form the column banks **122**Y.

[0160] As described above, the hole injection layers **120** are formed by forming a film made of metal (for example, tungsten) by using a vapor phase growth method such as sputtering or vacuum deposition then using photolithography and etching to pattern each pixel unit, but in the baking process for the row banks **122**X and the column banks **122**Y, the metal of the hole injection layers **120** is oxidized and the hole injection layers **120** are actually completed.

[Forming Organic Functional Layers]

[0161] The hole transport layers **121** and the light emitting layers **123** are laminated in this order on the hole injection layers **120** formed in the gaps **122***z* defined by the column banks **122**Y, including on the row banks **122**X (FIG. **4**, steps S**6**, S**7**; FIG. **6**D and FIG. **7**A).

[0162] Using an inkjet method, inks containing an electrically conductive polymer material such as poly(3,4-ethylenedioxythiophene) polystyrene sulfonate (PEDOT:PSS) are applied to upper surfaces of the hole injection layers **120** in the gaps **122***z* defined by the column banks **122**Y, then a solvent is volatized or baked. Subsequently, according to at least one embodiment, photolithography and etching is used to pattern pixel units to form upper layers of the hole transport layers **121**.

[0163] The hole transport layers **121** are formed by using a wet process such an inkjet method or gravure printing method to apply ink including a material of the hole transport layers **121** into the gaps **122***z* defined by the column banks **122**Y, then removing a solvent of the ink by volatilization or by baking.

[0164] The light emitting layers **123** are formed by using an inkjet method to apply inks including materials of the light emitting layers **123** into the gaps **122***z* defined by the column banks **122**Y, then baking (FIG. **4**, step S**6**; FIG. **7**A). More specifically, the substrate **100***x* is placed on an operation table of a droplet discharge device such that the column banks **122**Y are aligned along the Y direction, and an inkjet head **301** in which nozzle holes are lined up along the Y direction (Y axis in FIG. **7**A) is moved relative to the substrate **100***x* in the X direction while ink droplets **18** are discharged from the nozzle holes aimed at landing targets set within the gaps **122***z* between the column banks **122**Y.

[0165] In this process, inks **123**RI, **123**GI, **123**BI each containing a corresponding organic light-emitting layer material for red, green, or blue is discharged into corresponding ones of the gaps **122***z*, the inks are baked under low pressure, and the light-emitting layers **123**R, **123**G, **123**B are formed by the baking. In applying the inks of the light-emitting layers **123**, first, an ink for forming the light-emitting layers **123** is applied using the droplet discharge device.

[0166] Upon completion of application of ink for forming any one of the red light emitting layers, the green light emitting layers, and the blue light emitting layers with respect to the substrate **100***x*, another color of ink is applied with respect to the substrate **100***x*, then the third color of ink is applied. By repeating this process, three colors of ink are applied in order. As a result, red light-emitting layers, green light-emitting layers, and blue light-emitting layers are formed on the substrate **100***x* by repetition in the X axis direction.

[0167] Note that the method for forming the hole transport layers **121** and the light emitting layers **123** is not limited to a method described above, and known methods such as a dispenser method, a nozzle coating method, a spin coating method, intaglio printing, relief printing, and the like may be used to drop and/or apply ink.

[Forming Electron Transport Layer **124**]

[0168] After forming the light-emitting layers **123**, the electron transport layer **124** is formed across an entire light-emission area (display area) of the display panel **10** by a vacuum deposition method or the like (FIG. **4**, step S**8**; FIG. **7**B). Reasons for using vacuum deposition are to avoid damage to the light emitting layers **123**, which are organic, and because, in a vacuum deposition method performed under high vacuum, molecules to form a film proceed directly in a direction normal to the substrate. The electron transport layer **124** is formed by depositing a metal oxide or fluoride on the light emitting layers **123** by a vacuum deposition method or the like, and further depositing an organic material and a metal material by a co-evaporation deposition method. Note that film thickness of the electron transport layer **124** is set to be a film thickness most appropriate for optical light extraction.

[Forming Counter Electrode **125**]

[0169] After forming the electron transport layer **124**, the counter electrode **125** is formed so as to cover the electron transport layer **124** (FIG. **4**, step S**9**; FIG. **7**C).

[0170] The counter electrode **125** is formed by a chemical vapor deposition (CVD) method, a sputtering method, or a vacuum deposition method to cover the electron transport layer **124**. According to the present embodiment, the counter electrode **125** is formed by deposition of silver by a vacuum deposition method.

[0171] Next, a light-transmissive electrically conductive layer of ITO, IZO, or the like is formed by using a sputtering method.

[Forming Sealing Layer **126**]

[0172] The sealing layer **126** is formed so as to cover the counter electrode **125** (FIG. **4**, step S**10**; FIG. **7**D). Accord-

ing to at least one embodiment, the sealing layer **126** is formed by using a CVD method, a sputtering method, or the like.

[Forming Front Plate **131**]

[0173] The following describes the method of manufacturing the front plate **131** referred to as step S**10** in FIG. **4**. FIG. **8**A, **8**B, **8**C, **8**D, **8**D, **9**A, **9**B, **9**C, **9**D are schematic diagrams of cross-sections taken from the same location as A**1**-A**1** in FIG. **1**, illustrating states in manufacturing of the organic EL display panel **10**, according to at least one embodiment.

[0174] First, a light-transmissive upper substrate **130** is prepared (FIG. **8**A), then a top surface of the upper substrate **130** is irradiated by a laser LS at positions where the thickened portions **1331** of the light-shielding film **133** are to be formed, forming recesses **133***a* in the top surface of the upper substrate **130** (FIG. **8**B).

[0175] Next, a light-shielding film material (**133'**) including an ultraviolet light curable resin (for example an ultraviolet light curable acrylic resin) as a main component and a black pigment is applied to a surface of the upper substrate **130** (FIG. **8**C).

[0176] A pattern mask PM having defined openings is overlaid on an upper surface of the light shielding film material **133'** and is irradiated from above with ultraviolet light (FIG. **8**D).

[0177] Then, by removing the pattern mask PM and uncured portions of the light shielding layer material film **133'**, developing, and curing, the light shielding layer **133** is completed (FIG. **8**E). The light shielding film **133** is patterned to correspond to boundaries in the row and column directions between the self-luminous areas **100***a* of sub-pixels above the banks **122** formed on the substrate **100***x*, when the light shielding film **133** faces the substrate **100***x*. The light-shielding film **133** includes the base portions **1330** formed on the top surface of the upper substrate **130** and the thickened portions **1331** formed in the recesses. The thickened portions **1331** are disposed to correspond to peripheries of the openings **133***a* corresponding to the light-emitting elements **100**B.

[0178] Next, for example, the material **132**G of the color filter layer **132** with ultraviolet light curable resin as a main component is applied on a surface of the upper substrate **130** on which the light shielding layer **133** is formed (FIG. **9**A), then a defined pattern mask PM is placed and ultraviolet light irradiation is performed (FIG. **9**B).

[0179] Subsequently, curing is performed, and the pattern mask PM and uncured portions of the material **132**G are removed by developing to form the color filter layer **132**(G) (FIG. **9**C).

[0180] By repeating this process for each color of color filter material, the color filter layer **132**(R) (B) is formed (FIG. **9**D). Each portion of the color filter layer **132**B is disposed inside of the thickened portions **1331** of the light-shielding film **133**. In this way, the front plate **131** is completed.

[Joining Front Plate **131** and Back Panel]

[0181] Next, a material of the joining layer **127** that includes an ultraviolet light curable resin as a main component, such as acrylic resin, silicone resin, epoxy resin, or the like, is applied to a back panel that includes every layer from the substrate **100***x* to the sealing layer **126** (FIG. **10**A).

[0182] Next, the applied material is irradiated with ultraviolet light, and the back panel and the front panel **131** are joined while matching positions relative to each other. Care is taken that gas does not enter between the back panel and the front panel **131**. Subsequently, when both panels are baked and a sealing process is completed, the display panel **10** is completed (FIG. **10**B).

[0183] The light shielding film **133** on the front plate **131** is aligned to correspond to boundaries in the row and column directions between the self-luminous areas **100***a* of sub-pixels above the banks **122** formed on the substrate **100***x*.

Effects

[0184] The following describes effects of the display panel **10**.

[0185] FIGS. **11**A, **11**B, and **11**C are diagrams of cross-sections of light-emitting elements **100** in the organic EL display panel **10**, in which optical distances between light emission reference points and the light shielding film **133** are different. FIGS. **12**A and **12**B are enlarged schematic diagrams of cross-sections of light-emitting elements of reference examples in which widths of the openings **133***a* of the light-shielding film **133** are different. As described above, the reference points are edge portions of the hole transport layers **120** and the hole transport layer **121**.

[0186] First, as illustrated in FIG. **11**A, in the display panel **10**, when a light-emitting element width is Wel, a width of the opening **133***a* of the light-shielding film **133** is Wbm**0**, and an optical distance between the light emission reference point and the light-shielding film **133** is Ly**0**, a light-shielding width when viewed from a direction of a line of sight C at a viewing angle α is Lx**0**, and a light-shielding ratio with respect to the light-emitting element width Wel is Lx**0**/Wel.

[0187] The display panel **10** illustrated in FIG. **11**A can be compared with a reference example in which the width Wbm**0** of the opening **133***a* of the light-shielding film **133** is changed in order to change the light-shielding width Lx**0** and the light-shielding ratio Lx**0**/Wel.

[0188] For example, as illustrated in FIG. **12**A, when the width Wbm**0** of the opening **133***a* of the light shielding film **133** is increased to the width Wbm**1**, the shielding width Lx**0** when viewed from the viewing angle α becomes Lx**1**, which is smaller, and the light shielding ratio becomes Lx**1**/Wel, which is smaller than Lx**0**/Wel. When the width Wbm**1** of the opening **133***a* of the light-shielding film **133** is increased with respect to the light-emitting element width Wel, there is a risk that the column bank **122**Y is exposed via the opening **133***a* and external light reflection increases. Alternatively, an increase in the opening width Wbm**1** may be limited to secure a minimum line width of the light-shielding film **133**, such that the light-shielding width and the light-shielding ratio are not sufficiently increased.

[0189] As illustrated in FIG. **12**B, when the width Wbm**0** of the opening **133***a* of the light shielding film **133** is decreased to the width Wbm**2**, the shielding width Lx**0** when viewed from the viewing angle α becomes Lx**2**, which is larger, and the light shielding ratio becomes Lx**2**/Wel, which is larger than Lx**0**/Wel. When the width Wbm**2** of the opening **133***a* of the light-shielding film **133** is decreased with respect to the light-emitting element width Wel, the opening ratio of the light-emitting element **100** decreases,

and there is a risk that when joining the front plate **131** to the back panel, the margin for error in alignment of light-shielding film **133** on the front plate **131** to the sub-pixels **100***se* of the back panel becomes small, which makes manufacture difficult.

[0190] In contrast, in the display panel **10** as illustrated in FIG. **11**B, the light-shielding film **133** is provided below the color filter layer **132**, moving the position of the light-shielding film **133** downwards such that the optical distance between the light emission reference point and the light-shielding film **133** is Ly**1**, which is shorter than Ly**0**, and therefore the light-shielding width when viewed from the viewing angle α becomes Lx**1**, which is smaller than Lx**0**, and the light-shielding ratio becomes Lx**1**/Wel, which is smaller than Lx**0**/Wel. In this case, the light-emitting element width Wel, the width Wbm**0** of the opening **133***a* of the light-shielding film **133**, and the relative positions of the light-emitting element **100** and the opening **133***a* of the light-shielding film **133** do not change.

[0191] Further, as illustrated in FIG. **11**C, in the display panel **10**, a portion of the light-shielding film (thickened portion **1331**) is provided in the upper substrate **130** to move a position of the light-shielding film **133** upwards, such that the optical distance between the light emission reference point and the light-shielding film **133** is Ly**2**, which is longer than Ly**0**, and therefore the light-shielding width when viewed from the viewing angle α becomes Lx**2**, which is larger than Lx**0**, and the light-shielding ratio becomes Lx**2**/Wel, which is larger than Lx**0**/Wel. In this case also, the light-emitting element width Wel, the width Wbm**0** of the opening **133***a* of the light-shielding film **133**, and the relative positions of the light-emitting element **100** and the opening **133***a* of the light-shielding film **133** do not change.

[0192] According to the present embodiment, as described above, the lengths **119***x* (B), (G), (R) in the row direction of the pixel electrodes **119** of the light-emitting elements **100**B, **100**G, **100**R are configured from longest (B) to shortest (R).

[0193] When viewing the display panel **10**X from the direction of the line of sight C at the viewing angle α, the light-shielding widths Lx and the light shielding ratios Lx/Wel with respect to the widths Wel go from largest to smallest in the order of **100**B, **100**G, **100**R. Thus, a reduction rate in luminance visually recognized by a viewer from the light-emitting elements **100** goes from most to least in the order **100**R, **100**G, **100**B, and therefore luminance balance from the light-emitting elements **100**R, **100**G, **100**B changes and visually recognized chromaticity changes, and this is visually recognized as a chromaticity shift in grays and midtones when viewing from an oblique angle.

[0194] In contrast, according to the display panel **10**, as described above, the base portions **1330** of the light-shielding film **133** are provided with the thickened portions **1331** around the openings **133***a* corresponding to the light-emitting elements **100**B, and as a result, the optical distance between the light emission reference points of the light-emitting elements **100**B and the light-shielding film **133** corresponding to the light-emitting elements **100**B is larger than the optical distances between the light emission reference points of the light-emitting elements **100**R, **100**G and the light-shielding film **133** corresponding to the light-emitting elements **100**R, **100**G. Thus, by implementing changes in a direction that cancels out differences in light shielding ratio of the light-emitting elements **100**B, **100**G, **100**R, the differences in light shielding ratio can be compensated for, and changes in visual recognition of chromaticity when viewed from an oblique angle can thereby be reduced.

[0195] According to the display panel **10**, even when the light-shielding width Lx and the light-shielding ratio Lx/Wel are different depending on light emission color of the light-emitting elements **100**, the light-emitting element width Wel, the width Wbm**0** of the openings **133***a* of the light-shielding film **133**, and the relative positions of the light-emitting elements **100** and the openings **133***a* of the light-shielding film **133** do not change. That is, the light-shielding width Lx and the light-shielding ratio Lx/Wel can be controlled independently of the relative positions of the light-emitting elements **100** and the openings **133***a* of the light-shielding film **133**. Accordingly, even when the light-shielding widths Lx and the light-shielding ratios Lx/Wel are different depending on light emission color of the light-emitting elements **100**, when joining the front plate **131** to the back panel, the margin for error in alignment between the light-shielding film **133** on the front plate **131** and the sub-pixels **100***se* on the substrate **100***x* does not change.

[0196] As a result, in a high definition organic EL display panel, even when pixel density is increased and unit areas of the light-emitting elements **100** are decreased, a self-luminous display panel structure can be realized that reduces changes in chromaticity of emitted light when a display image is viewed from an oblique angle of 45° or more from the front.

<Review>

[0197] As described above, the display panel **10** according to at least one embodiment, is a self-luminous display panel in which the pixels **100***e* composed of the sub-pixels **100***se* are arranged, including the light-emitting elements **100** and the light-shielding film **133**. The light-shielding film **133** is provided with the opening **133***a* at positions corresponding to the light-emitting elements **100** in plan view, downstream in a light emission direction of the light-emitting elements **100**. The optical distances between the light-shielding film **133** and light emission reference points of the light-emitting elements **100** are different, depending on light emission color (R, G, B) of the light-emitting elements **100**. Further, according to at least one embodiment, the optical distances are each a maximum distance in the light emission direction between an edge of one of the openings **133***a* of the light-shielding film **133**, and one of the light emission reference points of a corresponding one of the light-emitting elements **100**. Further, according to at least one embodiment, positions in the light emission direction of top edges of the openings **133***a* of the light-shielding film **133** corresponding to the light-emitting elements **100** are different, depending on the light emission color of the light-emitting elements **100**.

[0198] According to this structure, in a high definition organic EL display panel, even when pixel density is increased and unit areas of the light-emitting elements **100** are decreased, a self-luminous display panel structure can be realized that reduces changes in chromaticity of emitted light when a display image is viewed from an oblique angle.

<<Circuit Structure of Organic EL Display Device **1**>>

[0199] The following describes circuit structure of an organic EL display device **1** (also referred to as "display

device **1**") that uses the display panel **10** pertaining to at least one embodiment, with reference to FIG. **13**.

[0200] As illustrated in FIG. **13**, the display device **1** includes the display panel **10** and drive control circuitry **20** connected to the display panel **10**.

[0201] The display panel **10** includes a plurality of organic EL elements arranged in a matrix, for example. The drive control circuitry **20** includes four drive circuits **21**, **22**, **23**, **24** and a control circuit **25**.

[0202] In the display panel **10**, the pixels **100***e* are arranged in a matrix, forming a display area. Each of the unit pixels **100***e* is composed of three organic EL elements, or in other words three sub-pixels **100***se* that emit light in three different colors, red (R), green (G), and blue (B). Circuit structure of each of the sub-pixels **100***se* is described below, with reference to FIG. **14**.

[0203] FIG. **14** is a schematic circuit diagram illustrating circuit structure in each of the light-emitting elements **100** corresponding to the sub-pixels **100***se* of the display panel **10** in the display device **1**.

[0204] As illustrated in FIG. **14**, according to the display panel **10** pertaining to the present embodiment, each of the sub-pixels **100***se* includes two transistors Tr_1, Tr_2, a capacitor C, and an organic EL element EL as a light-emitting element. The transistor Tr_1 is a drive transistor and the transistor Tr_2 is a switching transistor.

[0205] A gate G_2 of the switching transistor Tr_2 is connected to a scan line Vscn, and a source S_2 is connected to a data line Vdat. A drain D_2 of the switching transistor Tr_2 is connected to a gate G_1 of the drive transistor Tr_1.

[0206] A drain D_1 of the drive transistor Tr_1 is connected to a power source line Va, and a source S_1 is connected to a pixel electrode (anode) of the organic EL element EL. A counter electrode (cathode) of the organic EL element EL is connected to a ground line Vcat.

[0207] A first end of the capacitor C is connected to the drain D_2 of the switching transistor Tr_2 and the gate G_1 of the drive transistor Tr_1, and a second end of the capacitor C is connected to the power source line Va.

[0208] In the display panel **10**, a plurality of adjacent sub-pixels **100***se* (for example, three sub-pixels **100***se* with light emission colors red (R), green (G), and blue (B)) are combined to form one unit pixel **100***e*, and the unit pixels **100***e* are distributed to form a pixel area. For each of the sub-pixels **100***se*, a gate line leads out from the gate G_2 and is connected to scan line Vsen connected from outside the display panel **10**. Similarly, for each of the sub-pixels **100***se*, a source line leads out from the source S_2 and is connected to the data line Vdat connected from outside the display panel **10**.

[0209] Further, power source lines Va and ground lines Vcat of the sub-pixels **100***se* are aggregated and connected to a power source line and a ground line of the display device **1**.

<<Modifications>>

[0210] The display panel **10** pertaining to at least one embodiment has been described, but the present disclosure is not limited to the embodiments described above. For example, various modifications achievable by a person having ordinary skill in the art, and any combination of elements and functions of embodiments and modifications that do not depart from the spirit of the present invention are also included in the present disclosure. The following describes modifications of the organic EL display panel as examples of such embodiments.

<Modification 1>

[0211] According to the display panel **10** pertaining to at least one embodiment, by providing the thickened portions **1331** inside the upper substrate **130**, the optical distances to the light-shielding film **133** are different depending on the light emission color of the light-emitting elements **100**. According to an organic EL display panel **10**A pertaining to Modification 1, a light-shielding film **133**A that has different thicknesses corresponding to different light-emitting elements **100** is provided inside the upper substrate **130**, and therefore the optical distances to the light-shielding film **133**A are different depending on the light emission color of the light-emitting elements **100**.

[0212] FIG. **15** is a schematic cross section diagram taken along a same position as A**1**-A**1** in FIG. **1**, illustrating the display panel **10**A pertaining to Modification 1. As illustrated in FIG. **15**, the display panel **10**A includes a front plate **131**A in which a light-shielding film **133**A is provided inside the upper substrate **130**. Thickness of the light-shielding film **133**A is such that edge portions adjacent to openings corresponding to the light-emitting elements **100**B (tall portions of light-shielding film portions **133**A**2**) are thicker than edge portions adjacent to openings corresponding to the light-emitting elements **100**G, **100**R (light-shielding film portions **133**A**1** and low portions of the light-shielding film portions **133**A**2**).

[0213] Thus, according to the display panel **10**A, a structure is adopted in which a maximum distance Ly**2** in the emission direction is larger than a maximum distance Ly**0** in the emission direction, where the maximum distance Ly**2** is between the boundary between the hole injection layer **120** and the hole transport layer **121** in any one of the light-emitting elements **100**B and the light-shielding film portions **133**A**2** corresponding to the light-emitting element **100**B, and the maximum distance Ly**0** is between the boundary between the hole injection layer **120** and the hole transport layer **121** in any one of the light-emitting elements **100**R, **100**G and the light-shielding film portions **133**A**1** corresponding to the light-emitting elements **100**R, **100**G.

[0214] The following describes manufacture of the front plate **131**A of the display panel **10**A

[0215] FIGS. **16**A, **16**B, **16**C, **16**D, **16**E, **16**F, and **16**G are schematic diagrams of cross-sections taken from the same location as line A**1**-A**1** in FIG. **1**, illustrating states in manufacture of the front plate **131**A of the organic EL display panel **10**A according to Modification 1.

[0216] First, the upper substrate **130** is prepared, which is light-transmissive (FIG. **16**A), then a top surface of the upper substrate **130** is irradiated by a laser LS at positions where the light-shielding film **133**A is to be formed, forming recesses **133***a* in the top surface of the upper substrate **130** (FIG. **16**B). The recesses **133***a* are such that edge portions adjacent to openings corresponding to the light-emitting elements **100**B (corresponding to tall portions of the light-shielding film portions **133**A**2**) are thicker than edge portions adjacent to openings corresponding to the light-emitting elements **100**G, **100**R (corresponding to light-shielding film portions **133**A**1** and low portions of the light-shielding film portions **133**A**2**).

[0217] Next, a light-shielding film material (**133'**) including an ultraviolet light curable resin (for example an ultra-

violet light curable acrylic resin) as a main component and a black pigment is applied to a surface of the upper substrate **1330** (FIG. **16**C). Thus, the light-shielding film **133**A is formed in the recesses **133***a* provided in the upper substrate **130** such that portions adjacent to openings corresponding to the light-emitting elements **100**B (tall portions of the light-shielding film portions **133**A**2**) are thicker than portions adjacent to openings corresponding to the light-emitting elements **100**G, **100**R (the light-shielding film portions **133**A**1**, low portions of the light-shielding film portions **133**A**2**).

[0218] Next, for example, the material **132**G of the color filter layer **132** with ultraviolet light curable resin as a main component is applied on a surface of the upper substrate **130** on which the light-shielding film **133**A is formed (FIG. **16**D), then a defined pattern mask PM is placed and ultraviolet light irradiation is performed (FIG. **16**E).

[0219] Subsequently, curing is performed, and the pattern mask PM and uncured portions of the material **132**G are removed by developing to form the color filter layer **132**(G) (FIG. **16**F).

[0220] By repeating this process for each color of color filter material, the color filter layer **132**(R) (B) is formed (FIG. **16**G). In this way, the front plate **131**A is completed.

[0221] As described above, according to the display panel **10**A, optical distance between the light emission reference points of the light-emitting elements **100**B and the portions of the light-shielding film **133**A adjacent to the openings corresponding to the light-emitting elements **100**B is larger than optical distance between the light emission reference points of the light-emitting elements **100**R, **100**G and the portions of the light-shielding film **133**A adjacent to the openings corresponding to the light-emitting elements **100**R, **100**G.

[0222] Thus, according to the display panel **10**A, similarly to the display panel **10**, by implementing changes in a direction that cancels out differences in light shielding ratios of the light-emitting elements **100**B, **100**G, **100**R, the differences in light shielding ratio can be compensated for, and changes in visual recognition of chromaticity when viewed from an oblique angle can thereby be reduced.

<Modification 2>

[0223] According to the display panel **10** pertaining to at least one embodiment, by providing the thickened portions **1331** inside grooves in the upper substrate **130**, the optical distance to the light-shielding film **133** is different depending on the light emission color of the light-emitting elements **100**. According to the organic EL display panel **10**B pertaining to Modification 2, after providing thickened portions **133**B**1** on the upper substrate **130**, a resin film **130**B**1** that covers portions of the upper substrate **130** other than those covered by the thickened portions **133**B**1** is provided, and further, base portions **133**B**0** of a light-shielding film **133**B are provided on upper surfaces of the resin film **130**B**1**, thereby providing the light-shielding film **133**B having different thicknesses corresponding to different ones of the light-emitting elements **100**, such that optical distances to the light-shielding film **133**B are different depending on light emission colors of the light-emitting elements **100**.

[0224] FIG. **17** is a schematic diagram of a cross-section taken from the same location as line A**1**-A**1** in FIG. **1** from the display panel **10**B according to Modification 2. As illustrated in FIG. **17**, according to the display panel **10**B, the front plate **131**B is provided with the thickened portions **133**B**1** adjacent to openings of the light-shielding film **133**B corresponding to a specific color of the light-emitting elements **100** (for example, **100**B) on the upper substrate **130**, portions of the upper substrate not covered by the thickened portions **133**B**1** are covered with a light-transmissive resin film **130**B**1**, the color filter layer **132**(R) (G) (B) is disposed corresponding to the light-emitting elements **100** on the resin film **130**B**1**, and the base portions **133**B**0** of the light-shielding film **133**B are provided on portions of the resin film **130**B**1** other than that corresponding to the light-emitting elements **100**. Thus, according to the display panel **10**, a structure is adopted in which a maximum distance Ly**2** in the emission direction is larger than a maximum distance Ly**0** in the emission direction, where the maximum distance Ly**2** is between the boundary between the hole injection layer **120** and the hole transport layer **121** in any one of the light-emitting elements **100**B and the thickened portions **133**B**1** corresponding to the light-emitting element **100**B, and the maximum distance Ly**0** is between the boundary between the hole injection layer **120** and the hole transport layer **121** in any one of the light-emitting elements **100**R, **100**G and edges of the light-shielding film **133**B corresponding to the light-emitting elements **100**R, **100**G.

[0225] The following describes manufacture of the front plate **131**B of the display panel **10**B

[0226] FIGS. **18**A, **18**B, **18**C, **18**D, **18**E, and **18**F are schematic diagrams of cross-sections taken from the same location as line A**1**-A**1** in FIG. **1**, illustrating states in manufacture of a light shielding film of the front plate **131**B of the display panel **10**B according to Modification 2.

[0227] First, the upper substrate **130** is prepared, which is light-transmissive (FIG. **18**A), then an ultraviolet light curable resin paste including material for forming the thickened portions **133**B**1** is selectively applied to a top surface of the upper substrate **130** by using an application method such as an inkjet method at positions where the light-shielding film **133**B is to be formed (FIG. **18**B).

[0228] Next, the resin film **130**B**1** made of a light-transmissive ultraviolet light curable resin is applied to areas other than those covered by the thickened portions **133**B**1** (FIG. **18**C), and irradiated with ultraviolet light to be cured.

[0229] Next, a light-shielding film material **133**B' including an ultraviolet light curable resin (for example an ultraviolet light curable acrylic resin) as a main component and a black pigment is applied (FIG. **18**D), then irradiated with ultraviolet light via a pattern mask PM (FIG. **18**E), then curing is performed, and the pattern mask PM and uncured paste is removed by developing, thereby forming the light-shielding film **133**B (FIG. **18**F). Thus, the light-shielding film **133**B is formed on the upper substrate **130** such that the thickened portions **133**B**1** adjacent to the openings corresponding to the light-emitting elements **100**B are thicker than the base portions **133**B**0** adjacent to the openings corresponding to the light-emitting elements **100**G, **100**R.

[0230] Next, as in the example illustrated in FIG. **9**A, **9**B, **9**C, **9**D, the material **132**G of the color filter layer **132** having ultraviolet light curable resin as a main component is applied on a surface of the upper substrate **130** on which the light-shielding film **133**B is formed, then a defined pattern mask PM is placed and ultraviolet light irradiation is performed. Subsequently, curing is performed, and the pattern mask PM and uncured portions of the material **132**G are

removed by developing to form the color filter layer **132**(G). By repeating this process for each color of color filter material, the color filter layer **132**(R) (B) is formed, and the front plate **131**B is completed.

[0231] As described above, according to the display panel **10**B, a structure is adopted such that the optical distance between the light emission reference point of the light-emitting element **100**B and an edge of an opening of the light-shielding film **133**B corresponding to the light-emitting element **100**B is larger than the optical distances between the light emission reference points of the light-emitting elements **100**R, **100**G and edges of openings of the light-shielding film **133**B corresponding to the light-emitting elements **100**R, **100**G, and therefore the light-shielding ratio of the light-emitting elements **100**B is larger than the light-shielding ratio of the light-emitting elements **100**R, **100**G.

[0232] Thus, according to the display panel **10**B, similarly to the display panel **10**, by implementing changes in a direction that cancels out differences in light shielding ratios of the light-emitting elements **100**B, **100**G, **100**R, the differences in light shielding ratio can be compensated for, and changes in visual recognition of chromaticity when viewed from an oblique angle can thereby be reduced.

<Modification 3>

[0233] According to the display panel **10** pertaining to at least one embodiment, the optical distance between the light emission reference point of the light-emitting elements **100**B and the light-shielding film **133** is different from that of the light-emitting elements **100**R, **100**G, due to the provision of the thickened portions **1331** adjacent to the openings corresponding to the light-emitting elements **100**B.

[0234] FIG. **19** is a schematic diagram of a cross-section taken from the same location as line A**1**-A**1** in FIG. **1** from a display panel **10**C according to Modification 3. As illustrated in FIG. **19**, according to the display panel **10**C pertaining to Modification 3, a structure is adopted in which, in addition to the structure of the display panel **10** pertaining to at least one embodiment, a light-shielding film **133**C**1** is provided below the color filter layer **132**, below a light-shielding film **133**C, for example at positions corresponding to openings corresponding to the light-emitting elements **100**R. Openings are provided in the light-shielding film **133**C at positions corresponding to the light-emitting elements **100**R, and optical distance between the light emission reference point of the light-emitting elements **100**R and the light-shielding film **133**C for the light-emitting elements **100**R is Ly**1**, which is shorter than the optical distance Ly**0** for the light-emitting elements **100**G.

[0235] According to this structure, in the display panel **10**C, the optical distances Ly**1**, Ly**0**, Ly**2** between the light emission reference points of the light-emitting elements **100**R, **100**G, **100**B and the light-shielding film **133**C are set to different lengths for the light-emitting elements **100**R, **100**G, **100**B (in this example, Ly**1**<Ly**0**<Ly**2**), and light-shielding ratios for the light-emitting elements **100**R, **100**G, **100**B are made different in three steps, for example such that **100**R<**100**G<**100**B. As a result, light-shielding ratios can be more accurately compensated for among the light-emitting elements **100**R, **100**G, **100**B.

[0236] According to the display panel **10**C, a structure is implemented in which differences in light-shielding ratios of the light-emitting elements **100**B, **100**G, **100**R can be more finely changed, and therefore visually recognized chromaticity changes when viewed from an oblique angle can be more accurately compensated for.

<Modification 4>

[0237] FIG. **20** is a schematic diagram of a cross-section taken from the same location as line A**1**-A**1** in FIG. **1** from a display panel **10**D according to Modification 4. According to the display panel **10**D pertaining to Modification 4, a structure is adopted in which positions in the emission direction of the light emission reference points of the light-emitting elements **100** are different, depending on light emission colors of the light-emitting elements **100**. More specifically, as illustrated in FIG. **20**, according to the display panel **10**D, a structure is adopted in which recesses **118**D**1** are provided in a planarizing layer **118**D below the light-emitting elements **100**B, such that a position in the light emission direction of the light emission reference points of the light-emitting elements **100**B is lower than that of the light-emitting elements **100**R, **100**G. Thus, the optical distance between the light emission reference points of the light-emitting elements **100**B and edges of corresponding openings is Ly**2**, which is longer than the optical distance Ly**0** of the light-emitting elements **100**R, **100**G.

[0238] According to this structure of the display panel **10**D, as with the structure of other embodiments, the light-shielding ratio of the light-emitting elements **100**B can be made larger than the light-shielding ratio of the light-emitting elements **100**R, **100**G.

[0239] Thus, according to the display panel **10**D, a structure can be implemented that reduces changes in chromaticity visually recognized from an oblique viewing angle, similarly to the display panel **10** according to at least one embodiment, by changing positions of the light emission reference points.

<Modification 5>

[0240] FIG. **21** is a schematic diagram of a cross-section taken from the same location as line A**1**-A**1** in FIG. **1** from a display panel **10**E according to Modification 5. According to the display panel **10**E pertaining to Modification 5, a structure is adopted combining the display panel pertaining to at least one embodiment with the display panel **10**D pertaining to Modification 4. That is, according to the display panel **10**E, as illustrated in FIG. **21**, a structure is adopted in which, in addition to the thickened portions **1331** being provided adjacent to openings corresponding to the light-emitting elements **100**G, **100**B, the recesses **118**D**1** are provided in the planarizing layer **118**D below the light-emitting elements **100**B, and therefore positions in the light emission direction of the light emission reference points of the light-emitting elements **100**B are lower than those of the light-emitting elements **100**R, **100**G.

[0241] According to this structure of the display panel **10**E, as with the structure of Modification 4, the optical distances Ly**1**, Ly**0**, Ly**2** between the light emission reference points of the light-emitting elements **100**R, **100**G, **100**B and the light-shielding film **133** are set to different lengths for the light-emitting elements **100**R, **100**G, **100**B (in this example, Ly**1**<Ly**0**<Ly**2**), and light-shielding ratios for the light-emitting elements **100**R, **100**G, **100**B are made different in three steps, for example such that

100R<**100**G<**100**B. As a result, light-shielding ratios can be more accurately compensated for among the light-emitting elements **100**R, **100**G, **100**B.

[0242] According to the display panel **10**E, a structure is implemented in which differences in light-shielding ratios of the light-emitting elements **100**B, **100**G, **100**R can be more finely changed, and therefore visually recognized chromaticity changes when viewed from an oblique angle can be more accurately compensated for.

<Modifications 6, 7>

[0243] According to the display panel **10** pertaining to at least one embodiment, the optical distances LB in the light emission direction between the light emission reference points of the light-emitting elements **100** and the edges of the openings **133***a* of the light-shielding film **133** are different for the light-emitting elements **100**B, **100**R, **100**G, according to provision of the thickened portions **1331** adjacent to the openings corresponding to the light-emitting elements **100**B. However, according to embodiments of the present disclosure, it suffices that the optical distances between the light emission reference points of the light-emitting elements **100** and the light-shielding film **133** are different depending on light emission colors of the light-emitting elements **100**, and therefore according to at least one embodiment, members having different refractive indexes depending on light emission colors of the light-emitting elements **100** are interposed between the light emission reference points of the light-emitting elements **100** and the light-shielding film **133**.

[0244] According to the display panel **10**F, **10**G pertaining to the Modifications 6, 7, respectively, a light-adjusting film is disposed between the light-emitting elements **100** and the light-shielding film **133** in the light emission direction of the light-emitting elements **100**, and, in plan view, different areas of the light-adjusting film have different refractive indexes depending on the light emission color of the light-emitting elements **100**.

[0245] FIG. **22**, **23** are schematic diagrams of cross-sections taken from the same location as line A**1**-A**1** in FIG. **1**, from a display panel **10**F according to Modification 6, and a display panel **10**G according to Modification 7, respectively.

[0246] As illustrated in FIG. **22**, according to the display panel **10**F, a light-adjusting film **128**R is disposed between the counter electrode **125** and the sealing layer **126** of the light-emitting elements **100**R, and a light-adjusting film **128**G is disposed between the counter electrode **125** and the sealing layer **126** of the light-emitting elements **100**G.

[0247] As illustrated in FIG. **23**, according to the display panel **10**G, a light-adjusting film **134**R is disposed between the joining layer **127** and the color filter layer **132**(R) above the light-emitting elements **100**R, and a light-adjusting film **134**G is disposed between the joining layer **127** and the color filter layer **132**(G) above the light-emitting elements **100**G.

[0248] The light-adjusting films **128**R, **128**G, **134**R, **134**G include, for example, a high refractive index light-transmissive resin having a refractive index of 1.6 or more, and a low refractive index light-transmissive resin having a refractive index of 1.4 or less.

[0249] The gaps **122**zR, **122**zB, **122**zG corresponding to the light-emitting elements **100**, or the color filer layer **132**(R) (G) (B), are selectively filled with the resin material, which is then cured, forming the light-adjusting films **128**, **134**. Further, material efficiency can be improved by using an application method such as an inkjet method when manufacturing the light-adjusting film **128**. Alternatively, the light-adjusting films **134**R, **134**G may be formed by applying a photosensitive resin material onto the color filter layer **132**(R)(G), then patterning by using a photolithography method.

[0250] As described above, according to the display panels **10**F, **10**G, a structure can be adopted in which the optical distance between the light emission reference points of the light-emitting elements **100**B and the edges of the openings of the light-shielding film corresponding to the light-emitting elements **100**B is longer than the optical distance between the light emission reference points of the light-emitting elements **100**R, **100**G and the edge of the openings of the light-shielding film corresponding to the light-emitting elements **100**R, **100**G, and the light-shielding ratio of the light-emitting elements **100**B is larger than the light-shielding ratios of the light-emitting elements **100**R, **100**G.

[0251] Further, by providing the light-adjusting film **128** having different refractive indexes for different light-emitting elements **100**, the optical distances Ly**1**, Ly**0**, Ly**2** between the light emission reference points of the light-emitting elements **100**R, **100**G, **100**B and the light-shielding film **133** can have different lengths, and the light-shielding ratios of the light-emitting elements **100**R, **100**G, **100**B can be made different in three steps. As a result, light-shielding ratios can be more accurately compensated for among the light-emitting elements **100**R, **100**G, **100**B.

[0252] Thus, according to the display panels **10**F, **10**G, a structure can be implemented that reduces changes in chromaticity visually recognized from an oblique viewing angle, similarly to the display panel **10** according to at least one embodiment, by arrangement of a light-adjusting film in the light-emitting element sections or front plate.

[0253] Further, by making the refractive index of the light-adjusting film different for different light-emitting elements, the differences in light shielding ratios of the light-emitting elements **100**B, **100**G, **100**R can be more finely compensated for, and changes in visual recognition of chromaticity when viewed from an oblique angle can thereby be more accurately reduced.

<Modification 8>

[0254] According to the display panel **10**G pertaining to Modification 7, the light-adjusting film **134**R made of a high refractive index light-transmissive resin having a refractive index of 1.6 or more is provided between the joining layer **127** and the color filter layer **132**(R) above the light-emitting elements **100**R, and the light-adjusting film **134**G made of a low refractive index light-transmissive resin having a refractive index of 1.4 or less is provided between the joining layer **127** and the color filter layer **132**(G) above the light-emitting elements **100**G, and therefore the light-shielding ratio of the light-emitting elements **100**B is larger than the light-shielding ratios of the light-emitting elements **100**R, **100**G.

[0255] However, it suffices that optical distance between the light emission reference points of the light-emitting elements **100** be different depending on wavelengths of light emitted from the light-emitting elements **100**, and according to a display panel **10**J pertaining to Modification 8 a structure is adopted in which a light-adjusting layer made of materials having different refractive indexes depending on wavelengths of light emitted from the light-emitting ele-

ments **100** is provided between the light emission points of the light-emitting elements **100** and the light-shielding film **133**.

(Structure)

[0256] FIG. **24** is a schematic diagram of a cross-section taken from the same location as line **A1**-**A1** in FIG. **1** from the display panel **10**J according to Modification 8. In FIG. **24**, structure that is the same as that of a display panel according to any of the embodiments described above has the same reference sign and description thereof is not repeated here.

[0257] As illustrated in FIG. **24**, the display panel **10**J includes a light-adjusting film **127**J disposed between the light-emitting elements **100** and the light-shielding film **133**, common to the light-emitting elements **100**R, **100**G, **100**B that emit different colors of light. The light-adjusting film **127**J is light-transmissive, has a refractive index that depends on frequency (wavelength dependency), such that the larger the wavelength of transmitted light, the smaller the refractive index.

[0258] The light-adjusting film **127**J has a function of joining the front plate **131** to the layers from the substrate **100***x* to the sealing layer **126**, and has a function of preventing each layer from being exposed to moisture and air.

[0259] Further, the light-adjusting film **127**J is made of a material that has a refractive index that depends on frequency, such that the larger the wavelength of transmitted light, the smaller the refractive index. FIG. **25** is a graph illustrating a relationship between wavelength and refractive index n for a material of the light-adjusting layer **127**J. As illustrated in FIG. **25**, the refractive index n is $n_B \approx 1.75$ in a wavelength range B corresponding to light emitted from the light-emitting elements **100**B, $n_G \approx 1.71$ in a wavelength range G corresponding to light emitted from the light-emitting elements **100**G, and $n_R \approx 1.69$ in a wavelength range R corresponding to light emitted from the light-emitting elements **100**R. Thus, according to the display panel **10**J, a structure is adopted in which the refractive index of the light-adjusting film **127**J with respect to light emitted from the light-emitting elements **100**R, **100**G, **100**B is different such that **100**R<**100**G<**100**B. Thus, according to wavelength dispersion, the optical distances Ly**1**, Ly**0**, Ly**2** (also referred to as the optical distances Ly) between the light emission reference points of the light-emitting elements **100**R, **100**G, **100**B and the light-shielding film **133** are different lengths for the light-emitting elements **100**R, **100**G, **100**B, and the light-shielding ratios of the light-emitting elements **100**R, **100**G, **100**B are mainly in three different steps. As a result, light-shielding ratios can be more accurately compensated for among the light-emitting elements **100**R, **100**G, **100**B.

[0260] More specifically, the following conditions can be set. For example, assuming the optical distance Ly in a vertical direction (the light emission direction) from the light emission reference point to the shielding film **133** is 15 μm, and the viewing angle α is 30°, minimum distances d_R, d_B, d_G in a horizontal direction from the light-emitting layers **120** to the light-shielding layer **133** for the light-emitting elements **100**R, **100**B, **100**G, respectively, are such that the value for the light-emitting elements **100**R is approximately 0.5 μm longer than the value for the light-emitting elements **100**B. In this case, the optical distance and the difference in optical distance between the light-emitting elements **100**R and the light-emitting elements **100**B are approximately 0.5 μm. Due to the refractive index n_B (≈1.75) of a wavelength band of the light-emitting elements **100**B and the refractive index n_R (≈1.69) of a wavelength band of the light-emitting elements **100**R, the difference in optical distance between the light-emitting elements **100**R, **100**B caused by wavelength dispersion is 0.9 μm with respect to the optical distance Ly of approximately 15 μm from the light emission reference point to the light-shielding film **133**, and differences in optical distance can be compensated for based on frequency dependence of the refractive index of the light-adjustment layer **127**J. That is, among the light-emitting elements **100**R, **100**G, **100**B, refractive indexes corresponding to wavelengths of two colors of light-emitting element (in the example above, the light-emitting elements **100**R, **100**B), the refractive index np that has a larger value is 0.05 or more larger than the refractive index n_R that has a smaller value.

[0261] According to at least one embodiment, the joining layer **127**J is made of a resin adhesive. According to at least one embodiment, the joining layer **127**J is made of a light-transmissive resin material that has a different refractive index depending on wavelength, such as epoxy resin or vinyl resin. According to at least one embodiment, a high refractive index light-transmissive resin having a refractive index of 1.6 or more and a low refractive index light-transmissive resin having a refraction index of 1.4 or less are used.

[0262] Thus, according to the display panel **10**J, the refractive index of the light-adjusting film **127**J with respect to light emitted from the light-emitting elements **100**R, **100**G, **100**B is such that **100**R<**100**G<**100**B, but the refractive index of the light-adjusting film **127**J with respect to wavelengths of light emitted from the light-emitting elements **100** may be different in a different order. For example, according to at least one embodiment, for a light-emitting element having a large width Wel or a light-emitting element having a small spread of light emission distribution, the refractive index of the light-adjusting film **127**J is relatively small for wavelengths corresponding to these light-emitting elements, in order to achieve a relatively large light-shielding ratio.

(Manufacturing Method)

[0263] The light-adjusting film **127**J is formed by applying material of the light-adjusting film **127**J, a main component of which is a light-transmissive resin material that has a different refractive index depending on wavelength, to the back panel composed of layers from the substrate **100***x* to the sealing layer **126**, then, in a state where the back panel and the front plate **131** are positioned relative to each other, the material is irradiated by ultraviolet light, and the back panel and the front plate **131** are joined.

(Brief Review)

[0264] As described above, according to the display panel **10**J, the light-adjusting film **127**J, which is light-transmissive, is disposed between the light-emitting elements **100** and the light-shielding film **133** in the light emission direction of the light-emitting elements **100**, and is common to different colors of the light-emitting elements **100**. The longer the wavelength of transmitted light, the smaller the refractive index of the light-adjusting film **127**J, and there-

fore, similarly to the display panel **10** according to at least one embodiment, a display panel can be manufactured that reduces changes in visual recognition of chromaticity when viewed from an oblique viewing angle.

[0265] Further, by making the refractive index of the light-adjusting film different for different light-emitting elements, the differences in light shielding ratios of the light-emitting elements can be more finely compensated for, and changes in visual recognition of chromaticity when viewed from an oblique angle can thereby be more accurately reduced. Further, as definition gets higher and pixel width becomes smaller, compensation based on wavelength dispersion works more effectively.

<Modification 9>

[0266] According to the display panel **10** pertaining to at least one embodiment, by providing the thickened portions **1331** of the light-shielding film **133** in the upper substrate **130**, optical distances between the light emission reference points and the light-shielding film **133** are made different depending on light emission colors of the light-emitting elements **100**. According to an organic EL display panel **10**I pertaining to Modification 9, edge portions of color filter layers that are adjacent to each other in the row direction are stacked above boundaries between light-emitting elements that are adjacent in the row direction. Stacked edge portions of color filter layers constitute a light-shielding film with respect to adjacent light-emitting elements, and further, based on a stacking order of color filter layers at the edge portions, optical distances between the light-shielding film and light emission reference points can be made different between light emission color of light-emitting elements.

(Structure)

[0267] FIG. **26** is a schematic diagram of a cross-section taken from the same location as line A**1**-A**1** in FIG. **1** from the display panel **10**I according to Modification 9. In FIG. **26**, structure that is the same as that of a display panel according to any of the embodiments described above has the same reference sign and description thereof is not repeated here. According to the display panel **10**I, lengths **119***x* (B), (G), (R) in the row direction of the pixel electrodes **119** of the light-emitting elements **100**B, **100**G, **100**R are ordered from longest (B) to shortest (R).

[0268] As illustrated in FIG. **26**, the display panel **10**I includes a front plate **131**I, in which color filter layers **132**IR, **132**IG, **132**IB corresponding to the light-emitting elements **100**R, **100**G, **100**B are arranged facing the light-emitting elements **100**R, **100**G, **100**B (and are also referred to as color filter layers **1321**). Edge portions **132**Ib of the color filter layers **132**I are stacked above boundaries between the light-emitting elements **100** in the row direction. Light emitted by a given color of the light-emitting elements **100** (for example, R), has a small transmittance through the color filter layer **132**I corresponding to an adjacent one of the light-emitting elements **100** (for example, G or B), and therefore, for example, the color filter layers **132**IG or **132**IB function as a light-shielding layer with respect to the light-emitting elements **100**R. Thus, in the display panel **10**I, each of the edge portions **132**Ib of the color filters **132**I constitute a light-shielding film **133**I with respect to the light-emitting elements **100** adjacent in the row direction to the light-emitting elements **100** corresponding to the color filters **132**I.

[Light-Emitting Element **100**R]

[0269] In the example illustrated in FIG. **26**, the edge portion **1321***b* of the right of the color filter layer **132**IB and the edge portion **132**Ib of the left of the color filter layer **132**IG constitute the light-shielding film **133**I for the light-emitting element **100**R. Here, the viewing angle α in the row direction of the light-emitting elements **100**R is set to be equal.

[0270] Optical distance between the light emission reference points and the edges of the openings of the light-shielding film **133**I according to the present example is a distance Ly**1** in the light emission direction between a boundary between the hole injection layers **120** and the hole transport layers **121** of the light-emitting elements **100**R and a top edge **1321**Ba of an opening of the edge portion **1321***b* of the right of the color filter **132**IB, or a top edge **1321**Ga**2** of an opening of the edge portion **132**Ib of the left of the color filter **132**IG.

[Light-Emitting Element **100**B]

[0271] In the example illustrated in FIG. **26**, the edge portion **1321***b* of the right of the color filter layer **132**IG and the edge portion **1321***b* of the left of the color filter layer **132**IR constitute the light-shielding film **133**I for the light-emitting element **100**B. Here also, the viewing angle α in the row direction of the light-emitting elements **100**B is set to be equal.

[0272] Optical distance between the light emission reference points and the edges of the openings of the light-shielding film **133**I according to the present example is a distance Ly**0** in the light emission direction that is longer than the optical distance Ly**1** for the light-emitting elements **100**R, between a boundary between the hole injection layers **120** and the hole transport layers **121** of the light-emitting elements **100**B and a top edge **1321**Ga**1** of an opening of the edge portion **1321***b* of the right of the color filter **132**IG, or a top edge **1321**Ra of an opening of the edge portion **1321***b* of the left of the color filter **132**IR.

[Light-Emitting Element **100**G]

[0273] In the example illustrated in FIG. **26**, the edge portion **1321***b* of the right of the color filter layer **132**IR and the edge portion **132**Ib of the left of the color filter layer **132**IB constitute the light-shielding film **133**I for the light-emitting element **100**G. Here also, viewing angles α_1, α_2 in the row direction of the light-emitting elements **100**G are set to be equal.

[0274] The optical distances between the light emission reference points and edges of openings of the light-shielding film **133**I are different depending on a stacking order of the edge portions **132**Ib of the color filter layers **132**IR, **132**IB.

[0275] That is, according to the present example, the optical distance at a right side of the light-emitting element **100**G is the optical distance Ly**1** from a boundary between the hole injection layer **120** and the hole transport layer **121** of the light-emitting element **100**G to the top edge **1321**Ba of the opening of the edge portion **1321***b* of the left of the color filter **132**IB, and is equal to the optical distance Ly**1** for the light-emitting element **100**R.

[0276] On the other hand, the optical distance at a left side of the light-emitting element **100**G is the optical distance Ly**0** from a boundary between the hole injection layer **120** and the hole transport layer **121** of the light-emitting element **100**G to the top edge **132**IRa of the opening of the edge portion **132**Ib of the right of the color filter **132**IR, and is longer than the optical distance Ly**1**.

[0277] As described above, the viewing angles α_1, α_2 in the row direction of the light-emitting element **100**G are equal, and therefore the top edge **132**IRa of the opening of the color filter **132**IR of the optical distance Ly**0**, which is longer, is positioned farther from a center of the light-emitting element **100**G in the row direction than the top edge **1321**Ba of the opening of the color filter **132**IB of the optical distance Ly**1**, which is shorter. According to at least one embodiment, using the edge portion **1321***b* of the left of the color filter layer **132**IB corresponding to the optical distance Ly**1** as a reference, the edge portion **132**Ib of the right of the color filter **132**IR is moved left, and the viewing angles α_1, α_2 are equal.

(Manufacturing Method)

[0278] According to the display panel **10**I, in manufacture of the front plate **131**IB, as illustrated in FIG. **9**A, **9**B, **9**C, **9**D, the material **132**R of the color filter layer **132**IR, a main component of which is an ultraviolet light curable resin component, is applied to an upper surface of the upper substrate **130**, a defined pattern mask PM is placed, ultraviolet light irradiation is performed, curing is performed, and the pattern mask PM and uncured paste **132**R is removed by developing to form the color filter layer **132**IR. This process is repeated for each color of color filter material by using a pattern mask PM in which openings are formed such that the edge portions **133**Ib overlap, thereby forming the color filter layers **132**IG, **132**IB and the front plate **131**IB.

(Brief Review)

[0279] As described above, the display panel **10**I includes a plurality of the color filters **132**I corresponding to the plurality of different colors of the light-emitting elements **100**. The light-shielding layer **133**I is constituted by the edge portions **133**Ib of the color filter layers **132**I being stacked above the boundaries between the light-emitting elements **100** in the row direction. According to the example illustrated above, the optical distance Ly**0** is configured to be longer than the optical distance Ly**1**, such that, in comparison with a conventional light-shielding film **33** (see FIG. **31**), the light-shielding ratio for the light-emitting elements **100**R is smaller.

[0280] As a result, according to the display panel **10**I, similarly to the display panel **10** according to at least one embodiment, the light-shielding ratios for the light-emitting elements **100**B, **100**R are changed, for example to compensate for differences in light-shielding ratio due to differences in light-emitting element width Wel or light emission distribution among the light-emitting elements **100**, and therefore a display panel can be manufactured that reduces changes in chromaticity visually recognized when viewed from an oblique angle.

[0281] Further, the optical distance Ly**0** of the light-emitting elements **100**B is longer than the optical distance Ly**1** of the light-emitting elements **100**G, and the viewing angles α_1, α_2 in the row direction of the light-emitting elements **100**G are set to be equal to a reference of the edge portions **132**IB of the left of the color filter layers **132**IB corresponding to the optical distance Ly**1** of the light-emitting elements **100**B. Thus, compared with a case in which a conventional light-shielding film **33** (see FIG. **31**) is provided at the same position on the upper substrate **130**, the light-shielding ratio for the light-emitting elements **100**G is smaller. Thus, the light-shielding ratios for the light-emitting elements **100**B, **100**G are changed, and therefore changes in chromaticity visually recognized when viewed from an oblique angle can be reduced.

[0282] As described above, according to the display panel **10**I, a difference in light-shielding ratio due to a difference in light-emitting element width Wel or light emission distribution among the light-emitting elements **100** can be compensated for by adjusting the optical distance Ly**1** for each color.

[0283] According to the display panel **10**I described, among the light-emitting elements **100**R, **100**G, **100**B, the light-emitting elements **100**G have different optical distances to the left and right along the row direction. However, the light-emitting elements **100**R or the light-emitting elements **100**B may have different optical distance to the left and right along the row direction. In such a case, the viewing angles α_1, α_2 to the left and right of the light-emitting elements **100**R, **100**B are equal.

<Modification 10>

[0284] According to the display panel **10** pertaining to at least one embodiment, a maximum distance LB in a light emission direction between a light emission reference point of the light-emitting elements **100**B and an edge of the openings **133***a* of the light-shielding film **133** is longer than a maximum distance for the light-emitting elements **100**R, **100**G. According to at least one embodiment, as described above, the lengths **119***x* (B), (G), (R) in the row direction of the pixel electrodes **119** of the light-emitting elements **100**B, **100**G, **100**R are configured from longest (B) to shortest (R), such that the light-shielding ratio of the light-emitting elements **100**B is smallest. By adopting the structure described above of the display panel **10**, the light-shielding ratios are increased for the light-emitting elements that have the longest length of the pixel electrodes **119** in the row direction, effectively compensating for changes in light-shielding ratios due to light emission color.

[0285] However, there are factors other than the lengths **119***x* in the row direction of the pixel electrodes **119** that can cause light-shielding ratios of the light-emitting elements **100** to be different from each other.

[0286] FIG. **27** illustrates results of measuring film thicknesses of functional layers up to the light-emitting layer **123** in a cross-section taken along the row direction of the light-emitting element **100**B of the display panel **10**. As illustrated in FIG. **27**, film thickness of the functional layers formed by an application method is in a range from 0.26 to 0.33 within a range of ±7.5 μm from a center (x=0) in the row direction of the gap **122***z* between banks, or in other words a flat portion **123***fl* exists in which variation in film thickness is 0.07 or less. On both side of the flat portion **123***fl* in the x direction, film thickness gradually increases from 0.33 to 0.73 as the distance from the flat portion **123***fl* increases, or in other words pinning portions **123***pn* exist

with film thicknesses greater than the flat portion **123***fl* in ranges of 5 μm either side of the flat portion **123***fl*.

[0287] That is, each of the light-emitting layers **123** has a relatively uniform flat portion **123***fl* in a width range including a center of the gap **122***z* between the banks in the row direction having a film thickness in a defined range. Further, the light-emitting layers **123** include pinning portions **123***pn* on both sides of the flat portions **123***fl* in the row direction that have larger film thicknesses than the flat portions **123***fl*. In the pinning portions **123***pn*, film thickness gradually increases towards a maximum film thickness with increasing distance from the flat portion **123***fl*.

[0288] FIG. **28** is a schematic diagram illustrating results of measurement of luminance (relative luminance) distribution of monochromatic light measured at positions corresponding to A**1**-A**1** in FIG. **1** for each color of sub-pixel of the display panel **10**.

[0289] As illustrated in FIG. **28**, in each color of light-emitting element **100**R, **100**G, **100**B of the display panel **10**, a distribution of relative brightness of 0.1 or more was observed in a range corresponding to the flat portion **123***fl* of the light-emitting layer **123**. Light emission luminance distribution shape is different depending on the colors of the light-emitting elements **100**R, **100**G, **100**B, with the light-emitting elements **100**G showing a steeper distribution shape than the light-emitting elements **100**R, **100**B.

[0290] Further, the inventor confirmed that when the light-emitting elements **100**R, **100**G, **100**B are viewed from the viewing angle α, the light-emitting elements **100**R, **100**B have a larger rate of reduction in visually recognized luminance than the light-emitting elements **100**G.

[0291] In the light-emitting layer **123**, the flat portion **123***fl* having a smaller film thickness that the pinning portions **123***pn* has a smaller electrical resistance than the pinning portions **123***pn*, and therefore current density is high and light emission in the flat portion **123***fl* becomes dominant. Thus, in a range corresponding to the flat portion **123***fl* of the light-emitting layer **123**, a relative luminance distribution of 0.1 or more was observed.

[0292] Further, in manufacturing the light-emitting layers **123**, as described above, the inks **123**RI, **123**GI, **123**BI that contain materials of R, G, B organic light-emitting layers are applied to the gaps **122***z* that are sub-pixel formation areas, the inks are dried under low pressure, and baked to form the light-emitting layers **123**R, **123**G, **123**B. In the application of the inks of the light-emitting layers **123**, solutions for forming the light-emitting layers **123** are applied using a droplet discharge device, but the inks **123**RI, **123**GI, **123**BI each include different organic light-emitting layer material, have different solute density, ink viscosity, number of applied droplets, and the like, and therefore the film shapes of the light-emitting layers **123** tend to be different from each other. According to at least one embodiment, the width in the x direction of the flat portions **123***fl* in the light-emitting layers **123**G of the light-emitting elements **100**G is smaller than the width in the x direction of the flat portions **123***fl* in the light-emitting layers **123**R, **123**B of the light-emitting elements **100**R, **100**B, and therefore the light-emitting elements **100**G have a steeper distribution shape than the light-emitting elements **100**R, **100**B.

[0293] Due to the differences in luminance distribution shapes between the light-emitting elements **100**R, **100**G, **100**B, when the light-emitting elements **100**R, **100**G, **100**B are viewed from the direction of the viewing angle α, even if the light-shielding width and the light-shielding ratios are the same, the light-emitting elements **100**R, **100**B have a larger visible reduction rate of luminance than the light-emitting elements **100**G, luminance balance of the light-emitting elements **100**R, **100**G, **100**B when viewed from the viewing angle α changes, and therefore the chromaticity visually recognized changes.

[0294] According to the display panel **10**H pertaining to Modification 10, thickness of portions of the light-shielding film **133** corresponding to the light-emitting elements **100**G is increased inside the upper substrate **130**, and the optical distances from the light emission reference points to the light-shielding film **133** are longer for the light-emitting elements **100**G than for the light-emitting elements **100**R, **100**B.

[0295] FIG. **29** is a schematic diagram of a cross-section taken from the same location as line A**1**-A**1** in FIG. **1** from the organic EL display panel **10**H according to Modification 10. As illustrated in FIG. **29**, according to the display panel **10**H, the lengths **119***x* (B), **119***x* (G), **119***x* (R) in the row direction of the pixel electrodes **119** of the light-emitting elements **100**B, **100**G, **100**R are equal. Further, the thickened portions **1331** are formed around the openings **133***a* corresponding to the light-emitting elements **100**G, the base portions **1330** are formed around the openings corresponding to the light-emitting elements **100**R, **100**B, and therefore thickness of the light-shielding film **133**H is greater adjacent to the openings corresponding to the light-emitting elements **100**G than adjacent to the openings corresponding to the light-emitting elements **100**R, **100**B.

[0296] Thus, according to the display panel **10**H, a structure is adopted in which the optical distance Ly**2** in the light emission direction from the boundary between the hole injection layers **120** and the hole transport layers **121** of the light-emitting elements **100**G to the edges of the openings of the light-shielding film corresponding to the light-emitting elements **100***g* is longer than the optical distance in the light emission direction from the boundary between the hole injection layers **120** and the hole transport layers **121** of the light-emitting elements **100**R, **100**B to the edges of the openings of the light-shielding film corresponding to the light-emitting elements **100**R, **100**B.

[0297] Thus, according to the display panel **10**H, a structure is adopted in which the optical distance from the light emission reference points of the light-emitting elements **100**G to the edges of the openings of the light-shielding film corresponding to the light-emitting elements **100**G is longer than the optical distance from the light emission reference points of the light-emitting elements **100**R, **100**B to the edges of the openings of the light-shielding film corresponding to the light-emitting elements **100**R, **100**B, and the light-shielding ratio of the light-emitting elements **100**G is larger than the light-shielding ratios of the light-emitting elements **100**R, **100**B.

[0298] Thus, according to the display panel **10**H, a change in visually recognized chromaticity when viewed from an oblique direction is reduced, where the change is due to differences in steepness of luminance distribution shapes of the light-emitting elements **100**R, **100**G, **100**B causing differences in visually recognized luminance among the light-emitting elements **100** that have the same apparent light-shielding ratio when viewed from the oblique direction. That is, by changing light-shielding ratios to compensate for differences in luminance reduction rates of the light-emitting

elements **100**B, **100**G, **100**R, changes in chromaticity when viewed from an oblique direction can be reduced.

<Effect on Optical Resonator Structure>

[0299] According to the display panel **10**, an optical resonator structure is adopted to adjust light extraction efficiency. FIG. **30** is a diagram illustrating light interference in an optical resonator structure of the display panel **10** according to at least one embodiment. The drawing illustrates an element section corresponding to one sub-pixel **100***se*.

[0300] In the optical resonator structure of the sub-pixel **100***se* of the light-emitting element **100**, light is emitted from the light-emitting layer **123** from the vicinity of an interface with the hole transport layer **121**, and is transmitted through layers. Part of the light is reflected at interfaces between layers, and therefore interference occurs.

[0301] Part of the light emitted from the light-emitting layer **123** and traveling towards the counter electrode **125** passes through the counter electrode **125** and is emitted outside the light-emitting element along a first optical path C_1, and a part of the light emitted from the light-emitting layer **123** and traveling towards the pixel electrode **119** is reflected at the pixel electrode **119**, transmitted through the light-emitting layer **123** and the counter electrode **125**, and emitted outside the light-emitting element along a second optical path C_2. Thus, there is interference between this directly emitted and reflected light.

[0302] An optical film thickness L_1 illustrated in FIG. **30** corresponds to a difference in optical distance between the first optical path C_1 and the second optical path C_2. The optical film thickness L_1 is a total optical distance of the hole injection layer **120** and the hole transport layer **121** sandwiched between the light-emitting layer **123** and the pixel electrode **119**.

[0303] Part of the light traveling from the light-emitting layer **123** towards the counter electrode **125** is reflected at the counter electrode **125**, further reflected at the pixel electrode **119**, then emitted outside the light-emitting element along a third optical path C_3. Thus, interference occurs between light traveling the third optical path C_3 and light traveling the first optical path C_1. A difference in optical distance between the second optical path C_2 and the third optical path C_3 corresponds to an optical film thickness L_2 illustrated in FIG. **30**. The optical film thickness L_2 is a total optical distance of the light-emitting layer **123** and the electron transport layer **124**.

[0304] Thus, interference occurs between light traveling the third optical path C_3 and light traveling the first optical path C_1. A difference in optical distance between the first optical path C_1 and the third optical path C_3 corresponds to an optical film thickness L_3 illustrated in FIG. **30**. The optical film thickness L_3 is the sum of the optical film thickness L_1 and the optical film thickness L_2 ($L_3=L_1+L_2$). The optical film distance L_3 is a total optical distance of the hole injection layer **120**, the hole transport layer **121**, the light-emitting layer **123**, and the electron transport layer **124** sandwiched between the pixel electrode **119** and the counter electrode **125**.

[0305] In the design of optical distance in a light emitting element using an optical resonator structure, film thickness of the light-emitting layer **123** for adjusting both the optical film thickness L_2 and the optical film thickness L_3 is determined in consideration of film thicknesses of the hole injection layer **120** and the hole transport layer **121**, which are determined for adjustment of the optical film thickness L_1. In the adjustment of the optical film thicknesses L_2, L_3 that are affected by the film thickness of the light-emitting layer **123**, an optimal optical distance between electrodes is longest for red pixels and shortest for blue pixels, due to differences in light emission wavelengths for each color.

[0306] According to investigation by the inventor, an effective optical path length when viewed from an oblique direction gradually decreases as an angle of the viewing direction from the front increases. Therefore, wavelengths of emitted light that cause constructive interference shift towards shorter wavelengths, and when the angle from the front of the viewing direction increases, the wavelengths of emitted light shift towards shorter wavelengths.

[0307] In response to this, according to the display panel **10**H, the light-emitting elements **100** have different light emission distribution shapes along the row direction according to light emission color, and in the emission distribution shapes, for example, a light-emitting element **100** that has a larger range for a ½ luminance area has a larger distance between an opening edge and an edge of the light-emitting element **100** in the row direction than a light-emitting element **100** that has a smaller range for a ½ luminance area. More specifically, according to Modification 10, regarding the light-emitting elements **100**G, which have the steepest light emission distribution, the thickened portions **1331** are provided around the openings **133***a* of the light-shielding film **133** corresponding to the light-emitting elements **100**G, the base portions **1330** are provided around the openings **133***a* of the light-shielding film **133** corresponding to the light-emitting elements **100**R, **100**B, and therefore the thickness of the light-shielding film **133** is larger around the openings corresponding to the light-emitting elements **100**G than around the openings corresponding to the light-emitting elements **100**R, **100**B. Thus, light-shielding ratios of each color of the light-emitting elements **100** can be changed to compensate for shifts towards shorter wavelengths of emitted light caused by different pinning portions **123***pn* when different light-emitting elements **100** are viewed from an oblique direction.

[0308] Thus, according to the display panel **10**H, emission of light emitted from the flat portion **123***fl* and the pinning portions **123***pn* when viewed from an oblique angle can be adjusted by adjusting light-shielding ratios according to light emission colors of light-emitting elements, such that changes in chromaticity of light emitted from each sub-pixel when viewed from the oblique angle can be suppressed.

<Differences in Chromaticity Shifts in Row and Column Directions>

[0309] According to the display panel pertaining to at least one embodiment, the light-emitting layers **123** are formed by using an inkjet method, where inks containing constituent materials are applied in the gaps **122***z* defined by the column banks **122**Y, then baked. The light-emitting layers **123** are applied films each having an elongated shape that extends continuously not just in the self-luminous areas **100***a*, but also in the non-self-luminous areas **100***b* that are adjacent. Thus, in each of the light-emitting elements **100**, the film shape of the light-emitting layer **123** in the row direction includes the pinning portions **123***pn* on either side of the flat portion **123***fl* where film thickness gradually increases with distance from the flat portion **123***fl*. Length of the flat portion

123*fl* in the column direction is larger than length of the flat portion **123***fl* in the row direction. Further, in the display panel **10**, the unit pixels **100***e* each composed of three light-emitting elements **100** arranged in the row direction are arranged in a matrix, and therefore row and column direction lengths of each of the sub-pixels **100***se* corresponding to the light-emitting elements **100** are such that the column direction length is larger than the row direction length. Thus, light-shielding ratios when viewed from an oblique viewing angle are such that the light-shielding ratio in the row direction is greater than the light-shielding ratio in the column direction, and a chromaticity change visually recognized from the oblique viewing angle also changes more in the row direction than in the column direction. Accordingly, regarding edges in the row direction of the openings **133***a* of the light-shielding film **133**, according to at least one embodiment, a display panel structure is implemented that can effectively reduce chromaticity changes visually recognized from an oblique viewing angle by providing the thickened portions **1331**.

[0310] That is, according to at least one embodiment, the widths Wbma in the row direction and the column direction of the openings **133***a* of the light-shielding film **133** corresponding to the light-emitting elements **100**R, **100**G, **100**B lead to differences in the row direction and the column direction of visually recognized luminance when viewed from a viewing angle α (α may equal 45°) caused by portions of light emitted from the light-emitting elements **100** being blocked by the light-shielding film **133**.

[0311] According to at least one embodiment, the widths Wbma in the row direction and the column direction of the openings **133***a* corresponding to the light-emitting elements **100**R, **100**G, **100**B are structured such that a chromaticity difference (Δu'v') between observed chromaticity (u'v') viewed from the viewing angle α (where α is 45°) in the row direction and the column direction is 0.020 or less.

[0312] More specifically, a structure is adopted such that a difference between chromaticity observed from a viewing angle of 45° in the row direction and chromaticity observed from a viewing angle of 45° in the column direction, caused by portions of light from the light-emitting elements **100** being shielded by edges of the openings **133***a* of the light-shielding film **133**, is from 0 to 0.020.

[0313] With such a structure, it is possible to reduce a change in chromaticity visually recognized from an oblique viewing angle when opening widths Wbma in the row direction and the column direction of each of the openings **133***a* of the light-shielding film **133** are decreased, causing light-shielding ratios to increase.

[0314] According to at least one embodiment, the change in chromaticity (Δu'v') is 0.004 or less. Thus, the change in chromaticity (Δu'v') is equal to or below a human recognition limit.

[0315] According to at least one embodiment, when luminance observed from the viewing angle of 45° in the column direction is 103% or more of luminance observed from a viewing angle of 45° in the row direction, where a difference in observed luminance is caused by a portion of light emitted from each of the light-emitting elements **100** being shielded by the edge of the openings **133***a* of the light-shielding film **133**, then according to the present disclosure, for example, it effective to provide the thickened portions **1331**. That is, by making the optical distances between the light emission reference point of the light-emitting elements **100** and the light-shielding film **133** corresponding to the light-emitting elements **100** different according to light-shielding ratios for each of the light-emitting elements **100**, luminance balance from the light-emitting elements **100** can be controlled such that optimum points of chromaticity (u'v') observed from the viewing angle α (where α is 45°) in the row direction and the column direction can be made to match. Thus, where the light-emitting layers **123** of the light-emitting elements **100** are applied films each having an elongated shape that is continuous in one of the gaps **122***z* between the column banks **122**Y, it is possible to implement a display panel structure that even more accurately compensates for changes in chromaticity visually recognized from an oblique viewing angle due to changes in light-shielding ratios of the light-emitting elements **100**B, **100**G, **100**R.

<Differences in Chromaticity Shifts in Row and Column Directions>

[0316] According to at least one embodiment, as an optical resonator structure of the display panel **10**, as illustrated in FIG. **30**, an optical resonator structure is from a first reflective surface to a second reflective surface, where the first reflective surface is a boundary between the pixel electrodes **119** and the hole injection layers **120** and the second reflective surface is a boundary between the electron transport layer **124** and the counter electrode **125**. However, according to a method described in JP 2018-88365, for example, according to at least one embodiment, film thickness and refractive index of each layer including the light-adjusting film **128** are appropriately set, such that a third reflective surface is a boundary between the light-adjusting film **128** and the sealing layer **126**. According to this structure, the light-adjusting film **128** can more accurately compensate for changes in chromaticity visually recognized from an oblique viewing angle, and improve light extraction efficiency from the light-emitting elements **100**.

<Other Modifications>

[0317] According to the display panels **10**, **10**A, **10**B, **10**C, **10**D, **10**E, **10**F, **10**G pertaining to various embodiments, the pixel electrodes **119** are arranged in a matrix corresponding to sets of three self-luminous areas **100**aR, **100**aG, **100**aB arranged in order along the row direction. Lengths **119***x* in the row direction of the pixel electrodes **119** are configured such that the lengths **119***x* of the pixel electrodes **119** corresponding to the light-emitting elements **100** go from largest to smallest in the order of the light-emitting elements **100**B, **100**G, **100**R. In plan view, areas of the self-luminous areas **100**aB, **100**aG, **100**aR have a similar relationship of relative sizes. However, according to at least one embodiment, the lengths **119***x* in the row direction of the pixel electrodes **119**, and lengths in the row direction and areas of the light-emitting elements **100**B, **100**G, **100**R (self-luminous areas **100**aB, **100**aG, **100**aR) are not limited to the examples described above. For example, according to Modification B, the lengths **119***x* in the row direction of the pixel electrodes **119** are the same for the light-emitting elements **100**B, **100**G, **100**R. According to at least one embodiment, the lengths **119***x* in the row direction of the pixel electrodes **119** go from largest to smallest in the order of the light-emitting elements **100**R, **100**G, **100**B. According to at least one embodiment, any alternative size relationship of the lengths **119***x* may be used.

[0318] According to the light-emitting elements **100** pertaining to at least one embodiment, the hole injection layers **120**, the hole transport layers **121**, the light-emitting layer **123**, and the electron transport layer **124** are present between the pixel electrodes **119** and the electron transport layer **124**, but the present disclosure is not limited to this structure. According to at least one embodiment, a structure may omit one or more of the hole injection layers **120**, the hole transport layers **121**, and the electron transport layer **124**, such that, for example, between the pixel electrodes **119** and the counter electrode **125**, the hole transport layers **121** and the light-emitting layers **123** are present, or the light-emitting layers **123** and the electron transport layer **124** are present, or the hole transport layers **121**, the light-emitting layers **123**, and the electron transport layer **124** are present. Further, for example, aside from the light-emitting layers **123**, a structure may include a layer or a plurality of layers selected from the group consisting of hole injection layers, hole transport layers, electron transport layer, and electron injection layer. Further, all these layers need not be made of organic compounds, and one or more layers may be made of an inorganic compound.

[0319] According to the display panel **10** pertaining to at least one embodiment, the banks **122** have a line-shaped bank structure. Between each two adjacent pixel electrodes **119** in the row direction is one of the column banks **122**Y that extends in the column direction (Y direction in FIG. **1**). Between each two adjacent pixel electrodes **119** in the column direction is one of the row banks **122**X that extends in the row direction (X direction in FIG. **1**). The light-emitting layers **123** are continuous across areas where the row banks **122**X are present, but organic luminescence does not occur in these areas, which are therefore non-self-luminous areas **100***b*. However, according to at least one embodiment, the light-emitting layers **123** are not formed in areas where the row banks **122**X are present, the light-emitting layers **123** have island shapes within a lattice formed by the row banks **122**X and the column banks **122**Y, and therefore each sub-pixel is separated. Even in a structure where the light-emitting layers **123** are partitioned by pixel banks, chromaticity changes occur in the pinning portions **123***pn* of the light-emitting layers **123**. In such a structure, according to the display panel **10**, emission of light emitted from the flat portion **123***fl* and the pinning portions **123***pn* when viewed from an oblique angle can be adjusted by adjusting light-shielding ratios according to light emission colors of light-emitting elements, such that changes in chromaticity of light emitted from each sub-pixel when viewed from the oblique angle can be suppressed.

[0320] According to at least one embodiment, colors of light emitted by the light-emitting layers **123** of the sub-pixels **100***se* adjacent in the row direction in the gaps **122***z* between the column banks **122**Y are different from each other, while light emitted by the light-emitting layers **123** of the sub-pixels **100***se* adjacent in the column direction in gaps between the row banks **122**X is the same color. However, the light emitted by the light emitting layers **123** of the sub-pixels **100***se* that are adjacent in the row direction may be the same color, and the colors of light emitted by the light emitting layers **123** of the sub-pixels **100***se* that are adjacent in the column direction may be different from each other.

[0321] According to the display panel **10** pertaining to at least one embodiment, each of the pixels **100***e* includes a red sub-pixel, a green sub-pixel, and a blue sub-pixel, but the present disclosure is not limited to this. As another example, the light emitting layers may all be of a single type, or there may be four types emitting colors of light such as red, green, blue, and white.

[0322] Further, according to at least one embodiment, the pixels **100***e* are arranged in a matrix, but the present disclosure is not limited to this. For example, when an interval between pixel areas is one pitch, adjacent pixel regions in the row direction may be shifted by a half pitch in the column direction. In a high-definition display panel, a slight shift in the column direction is difficult to visually recognize, and even if film thickness irregularity occurs along a straight line (or staggered pattern) of a certain width, it will be visually recognized as a band. Thus, even in such a case, display quality of a display panel can be improved by suppressing uneven luminance when arranged in a staggered pattern.

[0323] According to at least one embodiment, the pixel electrodes **119**, which are anodes, are disposed below the EL element sections and connected to the wiring **110** connected to source electrodes of TFTs, but a structure may be adopted in which a counter electrode is disposed below the EL element sections and an anode is disposed above. In such a case, drains of the TFTs connect the cathode below the EL element sections.

[0324] Further, according to at least one embodiment, a structure is adopted in which two transistors Tr_1, Tr_2 are provided for each of the sub-pixels **100***se*, but the present disclosure is not limited to this. For example, a structure may be adopted in which a single transistor or three or more transistors correspond to one sub-pixel.

[0325] Further, according to at least one embodiment, a top-emission type of EL display panel is given as an example, but the present disclosure is not limited to this. For example, a bottom-emission type of display panel or the like can be used. In such a case, each structure can be changed appropriately.

[0326] At least one embodiment describes the method for manufacturing the organic EL display panel that uses organic electroluminescence for a light-emitting layer, but the present disclosure is also applicable to an inorganic EL display panel that uses inorganic electroluminescence for a light-emitting layer, a quantum dot display panel that uses quantum dot light-emitting diodes (LEDs) as a light-emitting layer (for example, see JP 2010-199067), or the like, where only structure and type of light-emitting layer are different, but structure such as the light-emitting layers and other functional layers being between pixel electrodes and a counter electrode is the same as that of an organic EL display panel, and where the light-emitting layers or another functional layer are formed by an application method.

<<Supplement>>

[0327] The embodiments described above each indicate one beneficial specific example of the present invention. Numerical values, shapes, materials, constituent elements, arrangement positions and connections of constituent elements, steps, order of steps, and the like indicated as embodiments are merely examples and are not intended to limit the present invention. Further, among constituent elements in the embodiments, any elements not described in independent claims representing top level concepts of the present invention are described as constituent elements constituting a more beneficial embodiment.

[0328] Further, the order described above in which steps are executed is for illustrative purposes, and the steps may be in an order other than described above. Further, a portion of the steps described above may be executed simultaneously (in parallel) with another step.

[0329] Further, in order to facilitate understanding of the invention, constituent elements in each drawing referenced by description of an embodiment are not necessarily drawn to scale. Further, the present invention is not limited to the description of the embodiments, and can be appropriately changed without departing from the scope of the present invention.

[0330] Further, at least a portion of functions of each embodiment and each modification may be combined.

[0331] Further, the present disclosure includes various modifications of the embodiments that are within the scope of ideas conceivable by a person skilled in the art.

1. A self-luminous display panel in which pixels composed of sub-pixels are arranged, comprising:

light-emitting elements corresponding one-to-one with the sub-pixels, containing first sub-pixels emitting a first color and second sub-pixels emitting a second color other than the first color; and

each sub-pixel including a pixel electrode, a hole injection layer provided above the pixel electrode, a light-emitting layer provided above the hole injection layer, and an upper electrode provided above the light-emitting layer,

a light-shielding layer at edge positions corresponding to the light-emitting elements in plan view, downstream in a light emission direction of the light-emitting elements, wherein

distances between the light-shielding layer and the light-shielding layer and the hole injection layer boundary with the pixel electrode is greater for sub-pixels of the second color than for sub-pixels of the first color, and

the pixels are arranged in a matrix of rows and columns,

the light-emitting elements have different lengths in a row or column direction depending on the light emission color of the light-emitting elements, and

among the light-emitting elements of each pixel, a first light-emitting element that has a larger length in the row or column direction has a larger value among the optical distances than a second light-emitting element that has a smaller length in the row or column direction.

2. The self-luminous display panel of claim **1**, wherein

the distances are each a maximum distance in the light emission direction between the light-shielding layer and the light-shielding layer and the hole injection layer boundary with the pixel electrode for sub-pixels of the first color and for sub-pixels of the second color.

3. The self-luminous display panel of claim **1**, wherein

around the openings of the light-shielding film in the first sub-pixel is formed by the base portion, around the openings of the second sub-pixel, thickened portions are laminated to the base portion.

4. The self-luminous display panel of claim **3**, further comprising:

a color filter layer,

the edges of the color filter layer face the base portion and un-face the thickened portions.

5. The self-luminous display panel of claim **1**, further comprising:

third sub-pixels emitting a third color,

distances between the light-shielding layer and the light-shielding layer and the hole injection layer boundary with the pixel electrode is greater for sub-pixels of the first color than for sub-pixels of the third color.

6. The self-luminous display panel of claim **5**, wherein

around the openings of the light-shielding film in the third sub-pixel, the light-shielding film is below the base portion.

7. The self-luminous display panel of claim **5**, further comprising:

a color filter layer,

around the openings of the light-shielding film in the third sub-pixel, the light-shielding film is below the color filter layer.

8. The self-luminous display panel of claim **1**, further comprising:

a light-adjusting layer between the light-emitting elements and the light-shielding layer in the light emission direction, wherein

the light-adjusting layer has areas corresponding to the light-emitting elements in plan view, and a refractive index of the light-adjusting layer is different for different areas, depending on light emission color of the light-emitting elements.

9. The self-luminous display panel of claim **1**, further comprising:

a light-adjusting layer between the light-emitting elements and the light-shielding layer in the light emission direction, the light-adjusting layer being common to a plurality of the light-emitting elements that emit different colors of light, wherein

a refractive index of the light-adjusting layer is different for different wavelengths of light emitted by the light-emitting elements.

10. The self-luminous display panel of claim **1**, wherein

the light-shielding layer is composed of portions of color filter layers overlapping in plan view above boundaries between the light-emitting elements, where the color filter layers correspond one-to-one with the light-emitting elements.

11. The self-luminous display panel of claim **1**, wherein

the pixels are arranged in a matrix of rows and columns, and

in plan view, in a row direction, a column direction, or both the row and column directions, the edge positions of the light-shielding layer each include the light-emitting element corresponding to the edge position, and a distance between an edge of the edge position and the light-emitting element is the same among the light-emitting elements, regardless of the light emission color of the light-emitting elements.

12. The self-luminous display panel of claim **1**, wherein

a difference in chromaticity between chromaticity observed from a viewing angle of 45 degrees from the front of the display panel in the row direction and chromaticity observed from a viewing angle of 45 degrees from the front of the display panel in the column direction is from 0 to 0.02, where the difference in observed chromaticity is caused by a portion of light

emitted from each light-emitting element being shielded by an edge of the edge position of the light shielding layer.

13. The self-luminous display panel of claim **1**, wherein luminance observed from a viewing angle of 45 degrees from the front of the display panel in the column direction is 103% or more of luminance observed from a viewing angle of 45 degrees from the front of the display panel in the row direction, where a difference in observed luminance is caused by a portion of light emitted from each light-emitting element being shielded by the edge of the edge position of the light shielding layer.

14. A self-luminous display panel in which pixels composed of sub-pixels are arranged, comprising:

light-emitting elements corresponding one-to-one with the sub-pixels, each sub-pixel in a pixel emitting a different color of light;

a light-shielding layer at edge positions corresponding to the light-emitting elements in plan view, downstream in a light emission direction of the light-emitting elements, and

a light-adjusting layer between the light-emitting elements and the light-shielding layer in the light emission direction, the light-adjusting layer being common to a plurality of the light-emitting elements that emit different colors of light, wherein

distances between the light-shielding layer and the light-shielding layer and the hole injection layer boundary with the pixel electrode is greater for sub-pixels of the second color than for sub-pixels of the first color, and

a refractive index of the light-adjusting layer is different for different wavelengths of light emitted by the light-emitting elements.

15. The self-luminous display panel of claim **1**, wherein

thickness of the light-shielding film is such that edge portions adjacent to openings corresponding to the sub-pixels of the first color are thicker than edge portions adjacent to openings corresponding to the sub-pixels of the second color.

* * * * *