US 20250270699A1

(19) United States
(12) Patent Application Publication
HIROKI
(10) Pub. No.: US 2025/0270699 A1
(43) Pub. Date: Aug. 28, 2025

(54) **VALVE DEVICE, SUBSTRATE PROCESSING APPARATUS, AND SUBSTRATE PROCESSING METHOD**

(71) Applicant: **Tokyo Electron Limited**, Tokyo (JP)

(72) Inventor: **Tsutomu HIROKI**, Nirasaki City (JP)

(21) Appl. No.: **19/055,721**

(22) Filed: **Feb. 18, 2025**

(30) **Foreign Application Priority Data**

Feb. 26, 2024 (JP) 2024-026151

Publication Classification

(51) **Int. Cl.**

C23C 16/455	(2006.01)
C23C 16/44	(2006.01)
C23C 16/52	(2006.01)

(52) **U.S. Cl.**

CPC ***C23C 16/45561*** (2013.01); ***C23C 16/4412*** (2013.01); ***C23C 16/45544*** (2013.01); ***C23C 16/52*** (2013.01)

(57) **ABSTRACT**

A valve device provided in a processing apparatus including a processing container for processing a workpiece, the valve device includes: a valve body including a valve main body configured to open or close an exhaust path connected to an exhaust port that opens into the processing container and a mover provided in the valve main body to move between a first position at the exhaust path and a second position upstream of the first position and outside the exhaust port; and a detector including a detection part provided in the mover to detect an internal state of the processing container while the mover is at the second position.

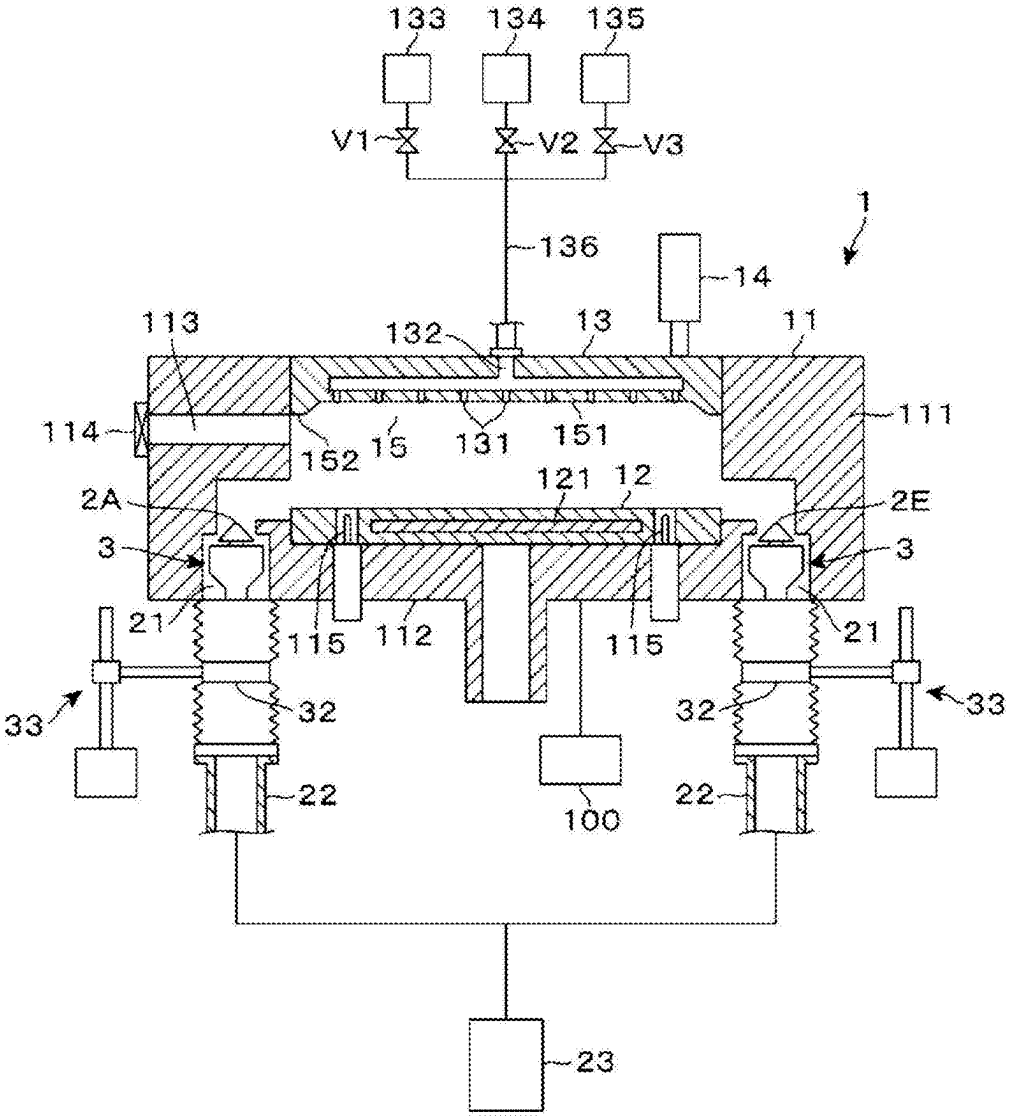

FIG. 1

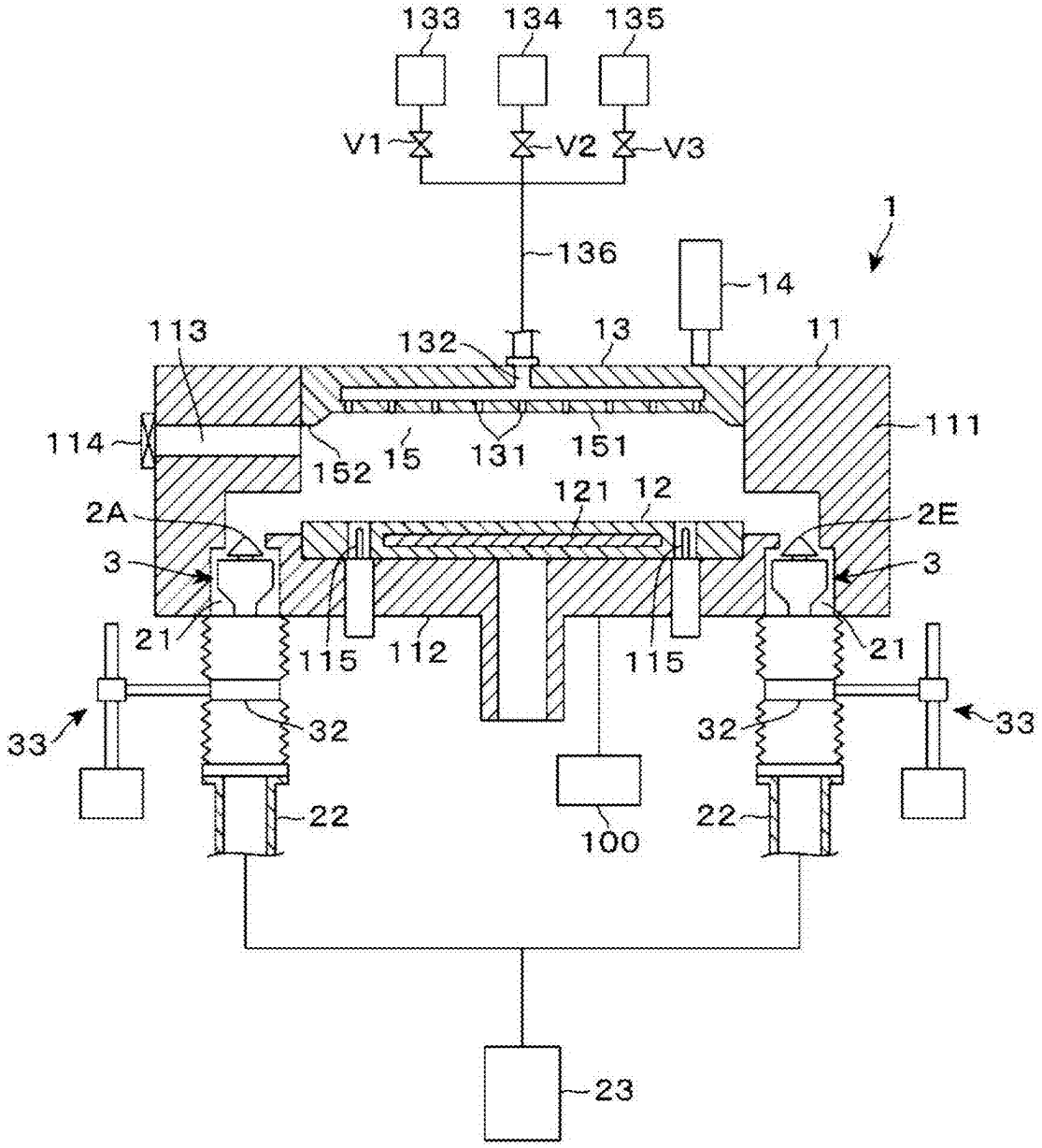
133
134
135
V1
V2
V3
136
1
14
113
132
13
11
114
152
15
131
151
111
121
12
2A
2E
3
3
21
115
112
115
21
33
32
32
33
22
100
22
23

FIG. 2

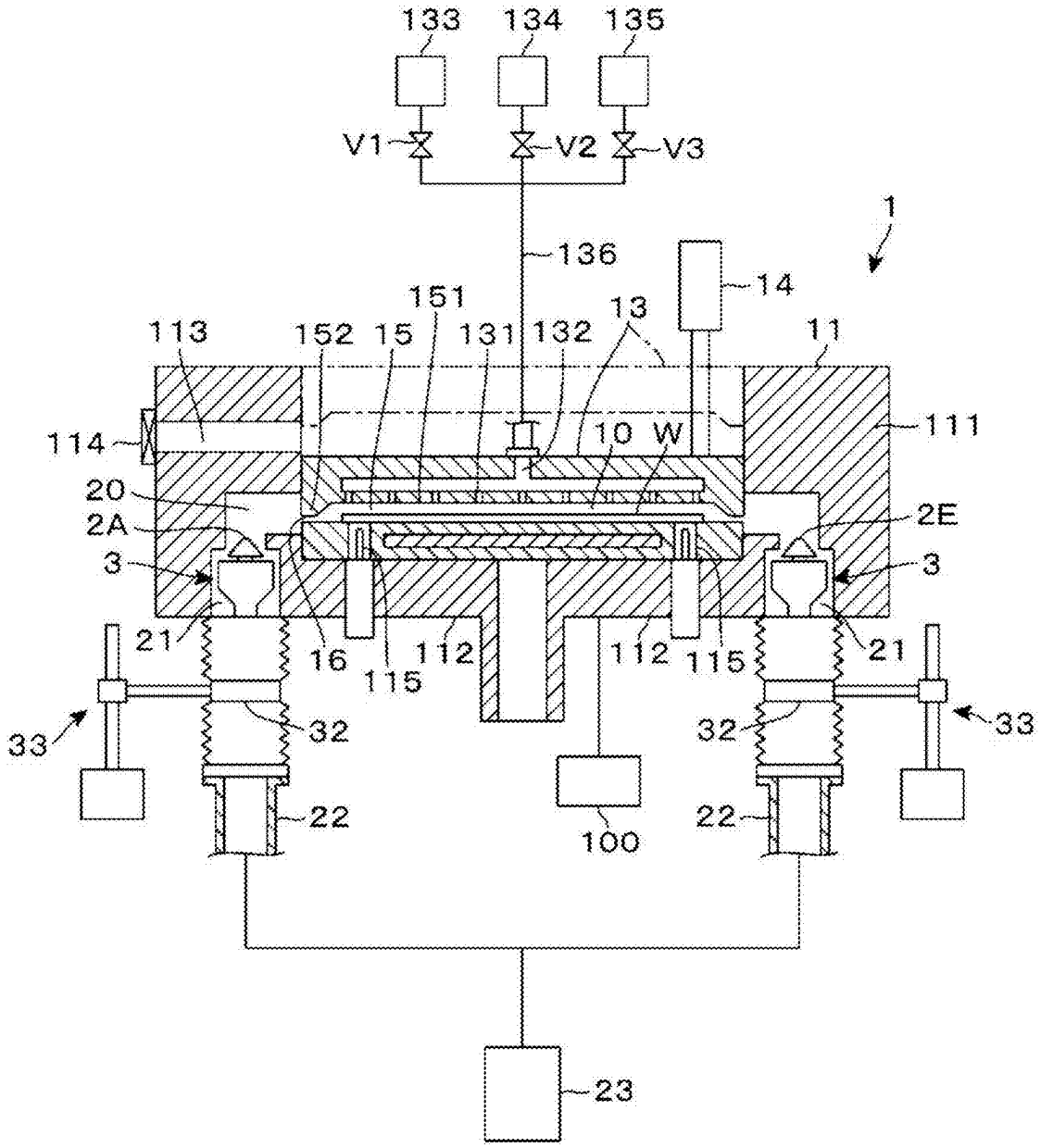
133
134
135
V1
V2
V3
136
1
14
151
13
113
152
15
131
132
11
114
10
W
111
20
2A
2E
3
3
21
16
112
115
112
115
21
33
32
32
33
22
100
22
23

FIG. 3

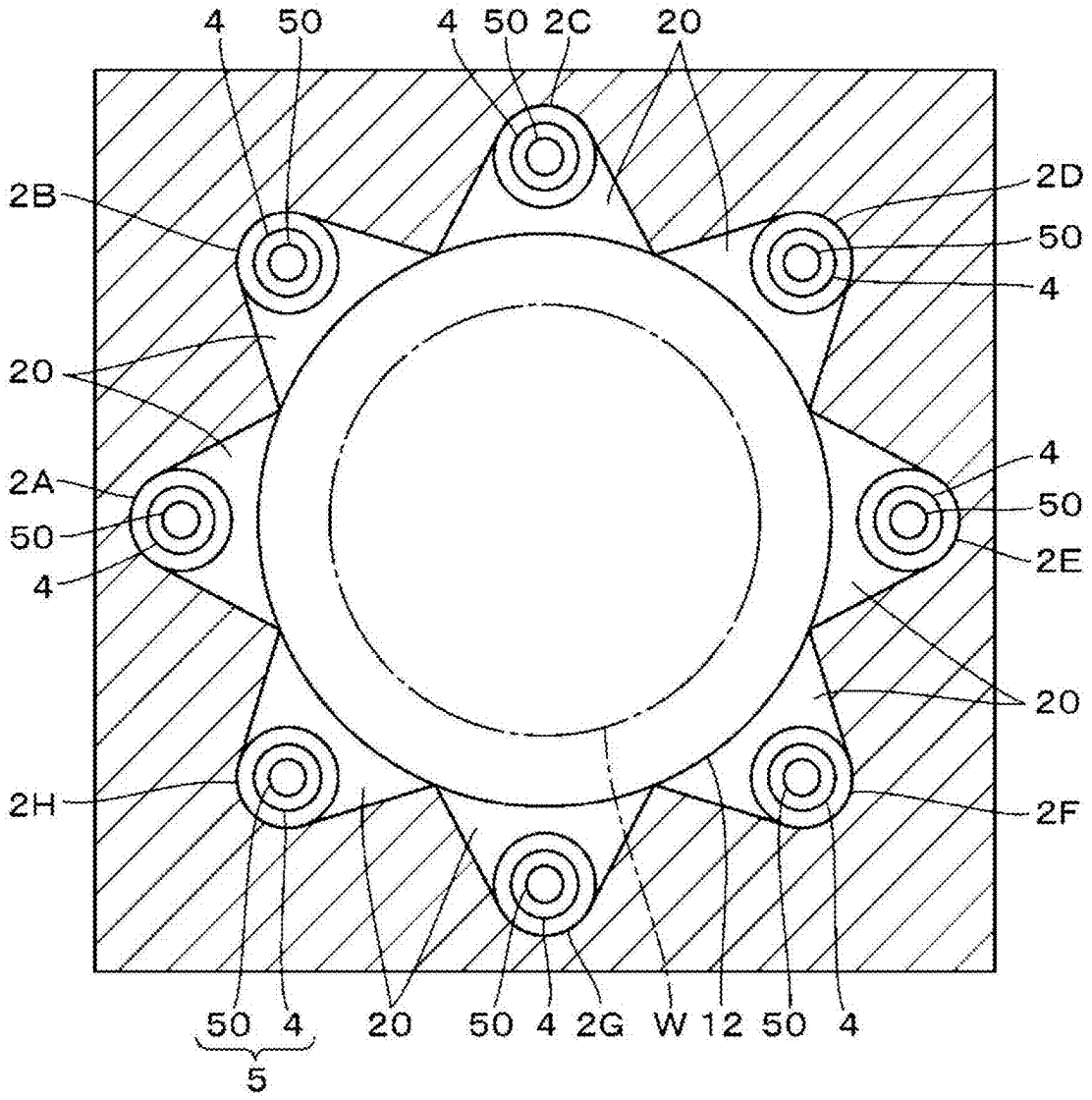
4
50
4
50
2C
20
2B
2D
50
4
20
2A
50
4
4
50
2E
20
2H
2F
50
4
20
50
4
2G
W
12
50
4
5

FIG. 4

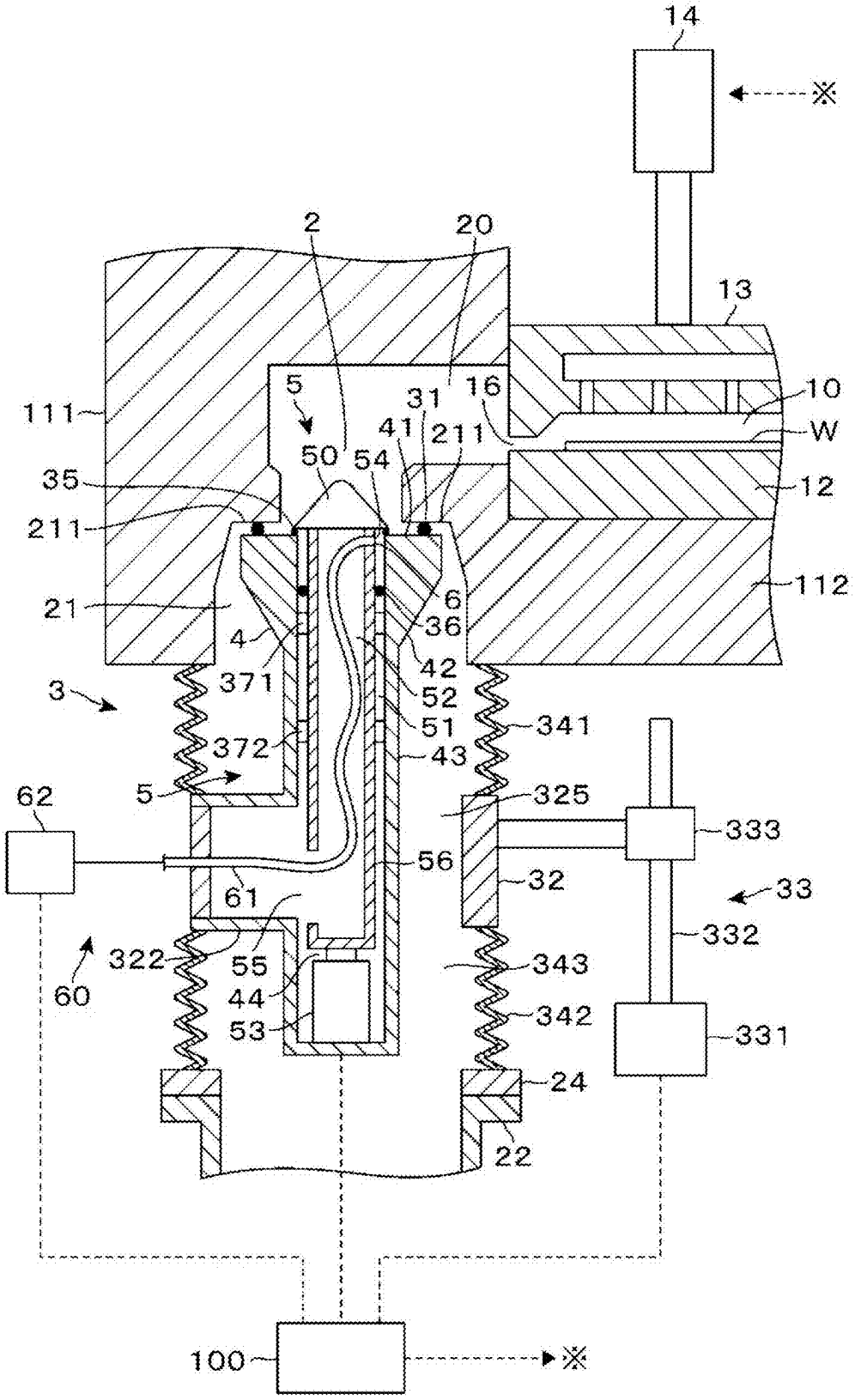
14
※
2
20
13
5
31
16
10
111
41
211
W
50
54
35
12
211
112
21
6
36
4
42
371
52
3
51
341
372
43
5
325
62
333
56
32
61
33
332
322
55
343
60
44
342
53
331
24
22
100
※

FIG. 5

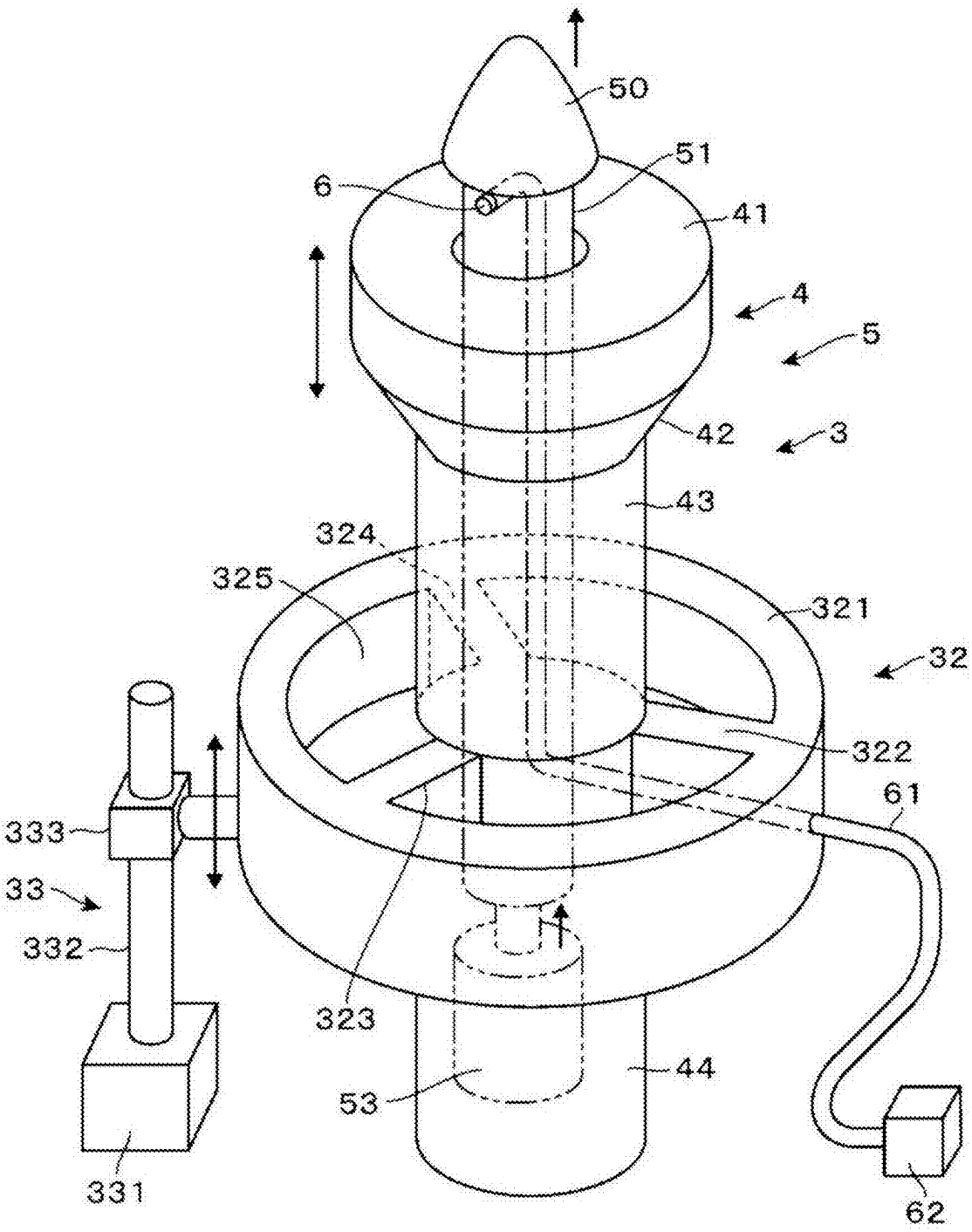
50
51
6
41
4
5
42
3
43
324
325
321
32
322
61
333
33
332
323
44
53
331
62

FIG. 6

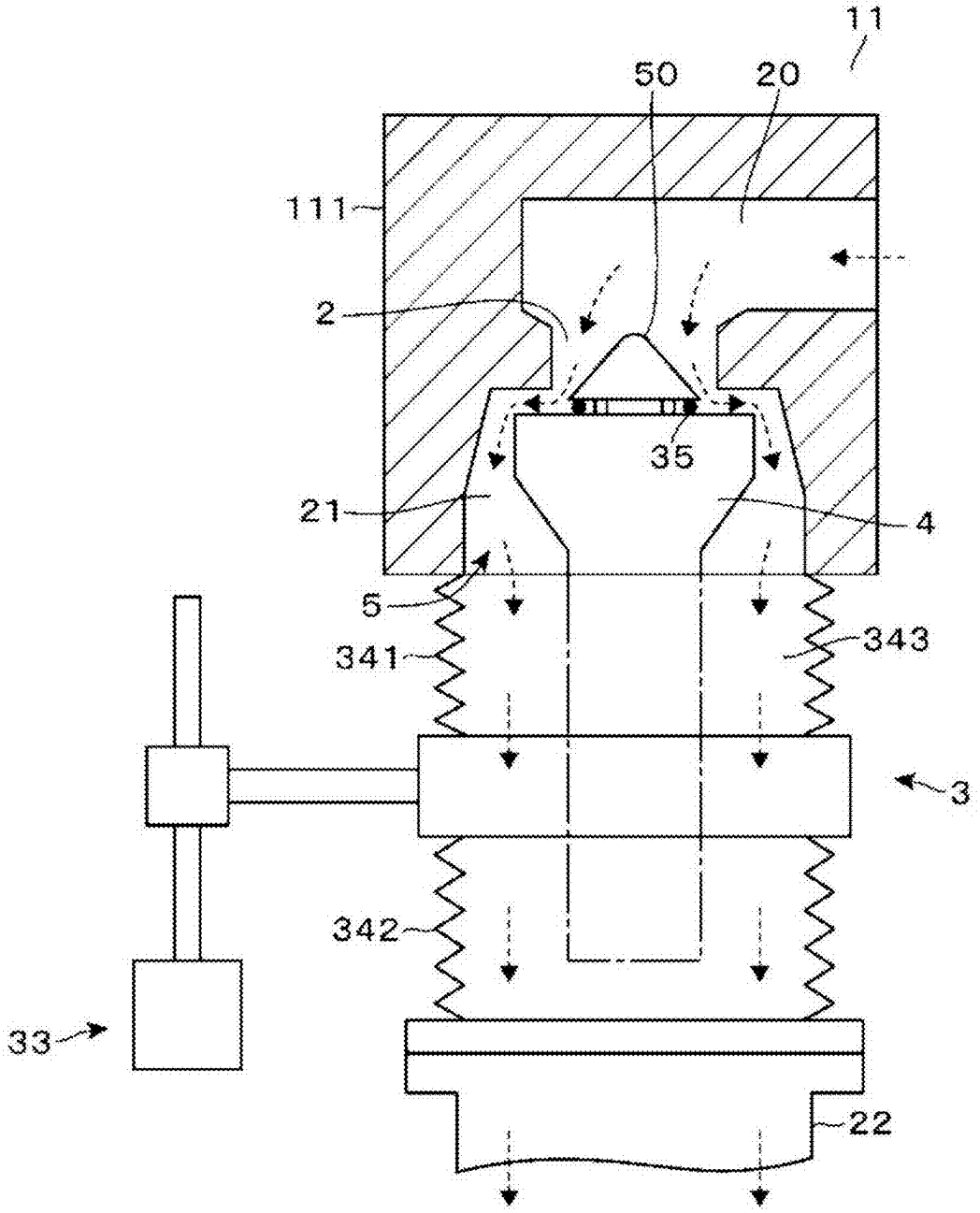

FIG. 7

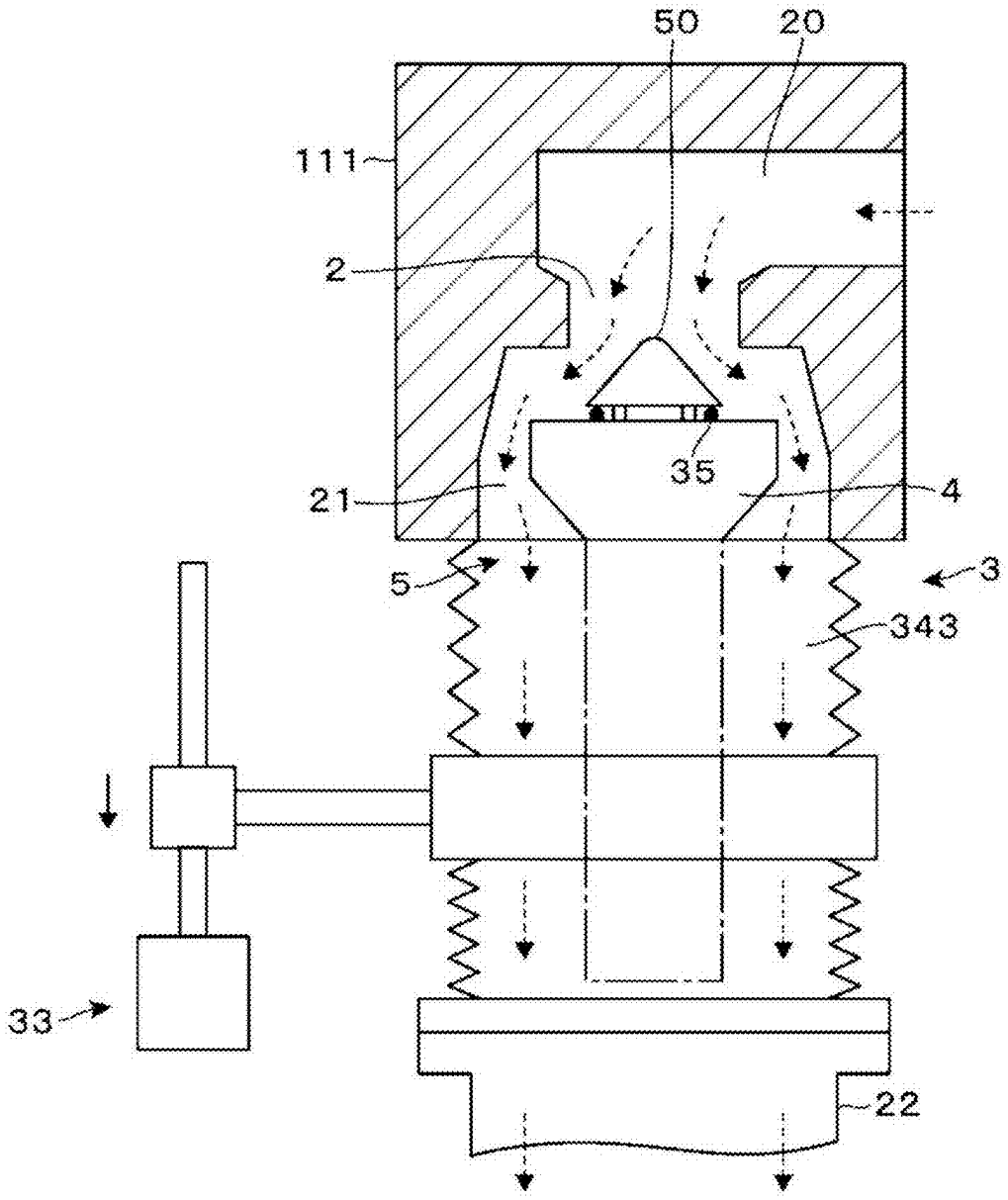

FIG. 8

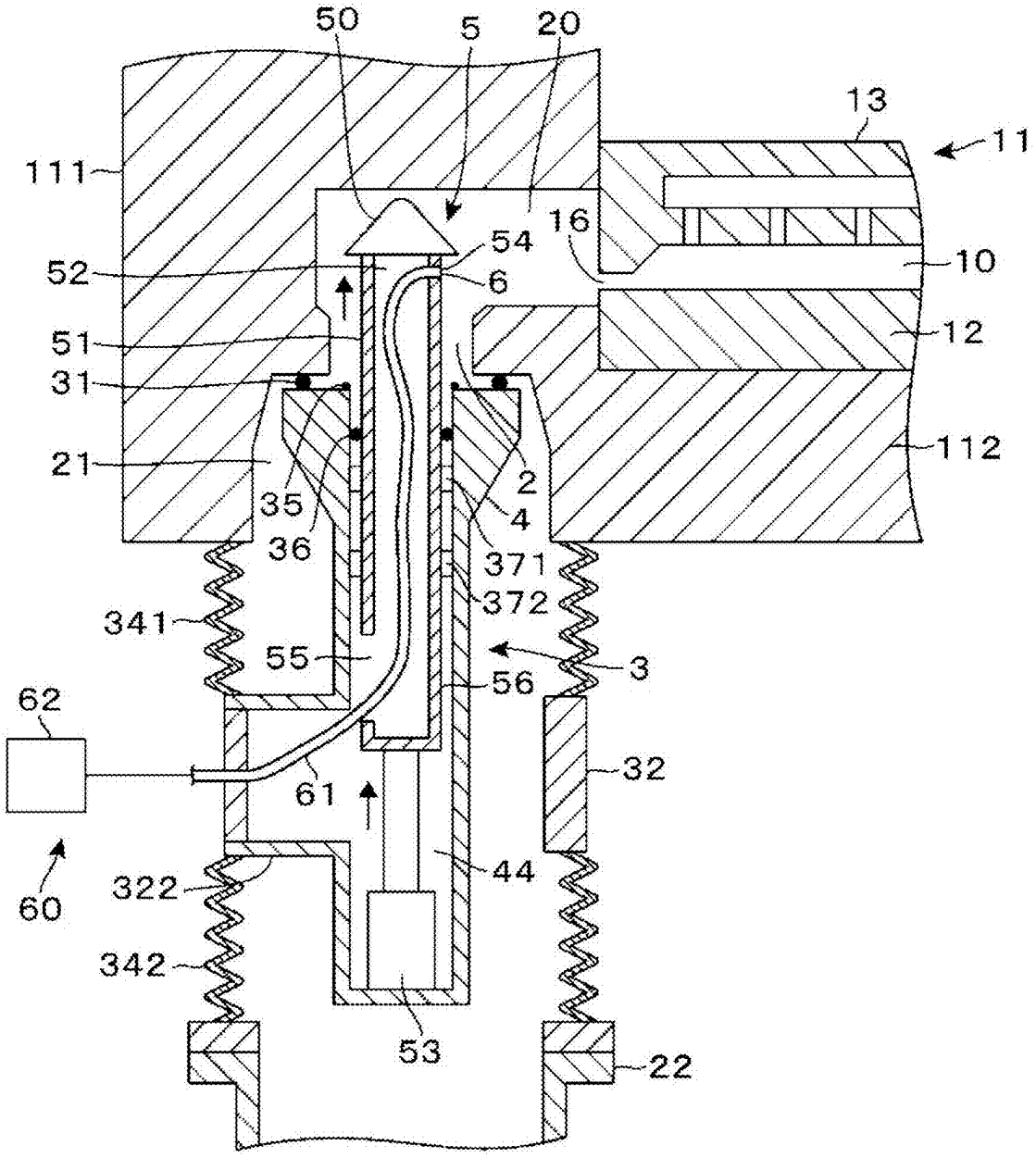
50
5
20
13
11
111
16
54
10
52
6
51
12
31
21
112
2
35
4
36
371
372
341
55
3
56
62
32
61
44
60
322
342
53
22

FIG. 9

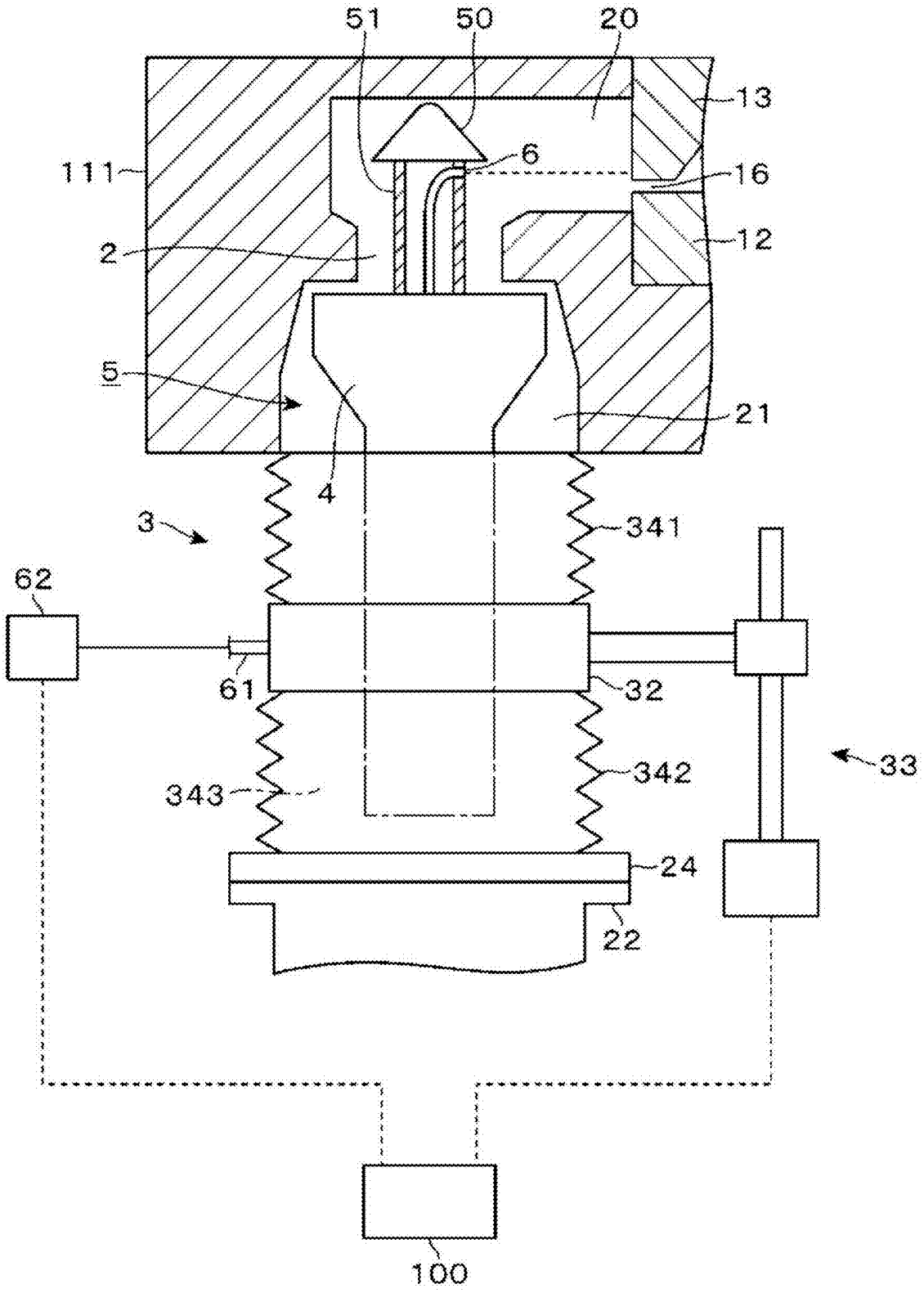

FIG. 10

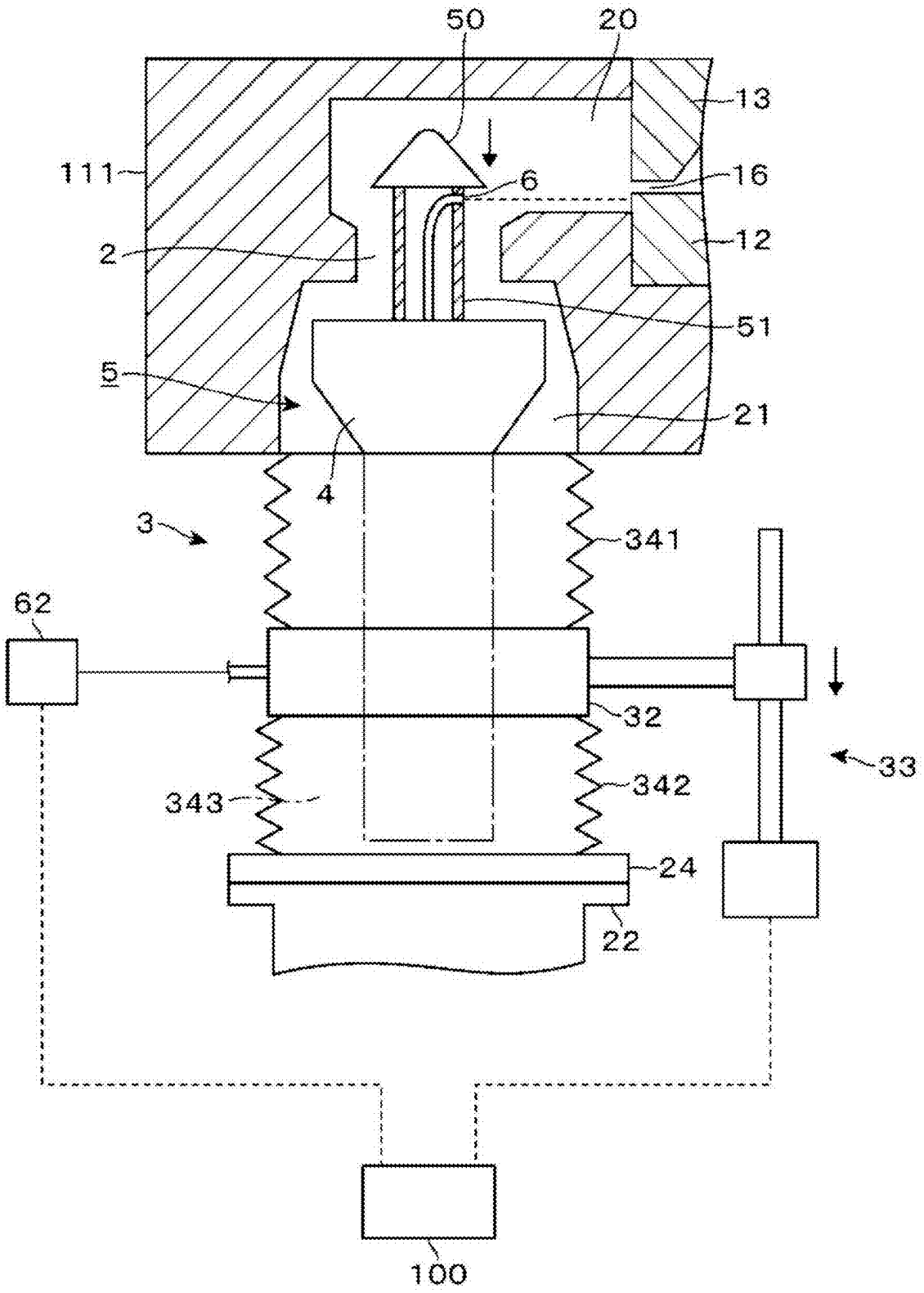

FIG. 11

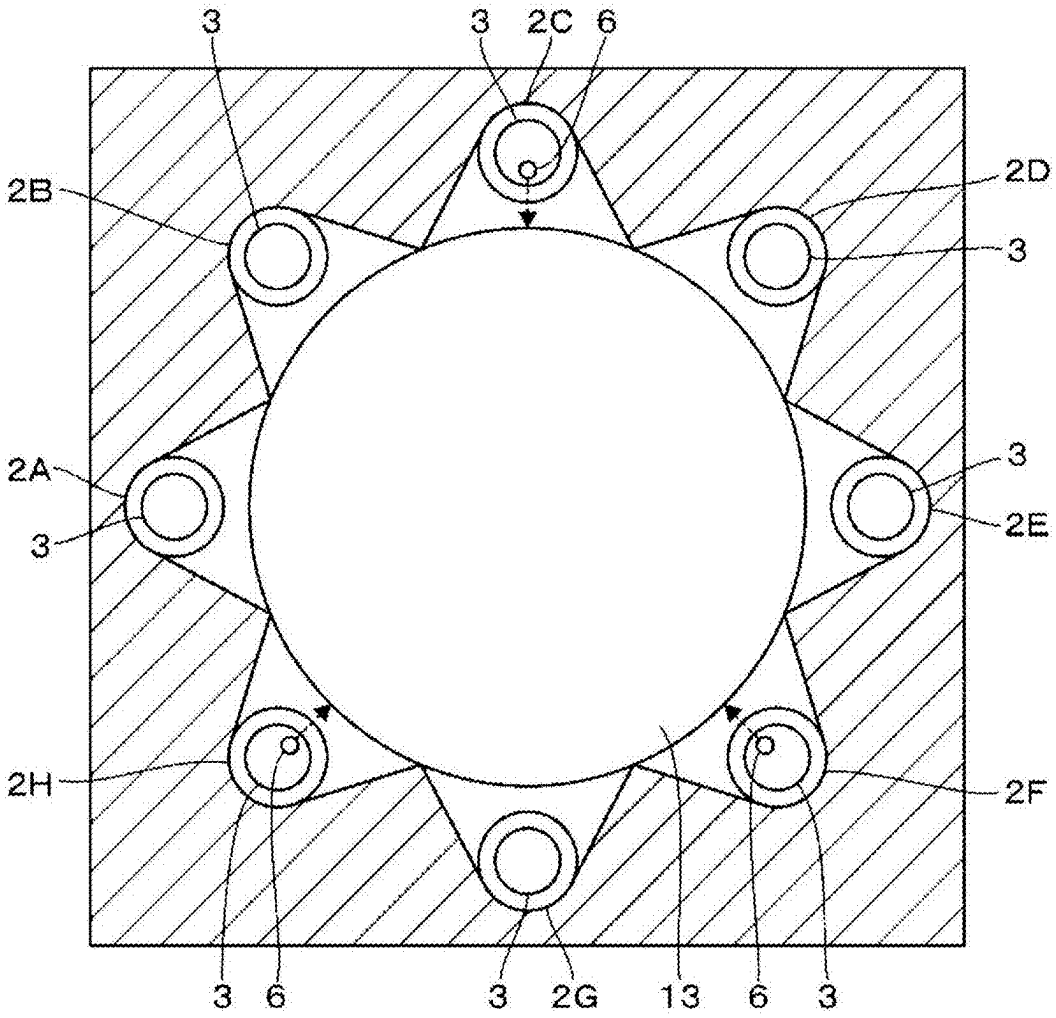

FIG. 12

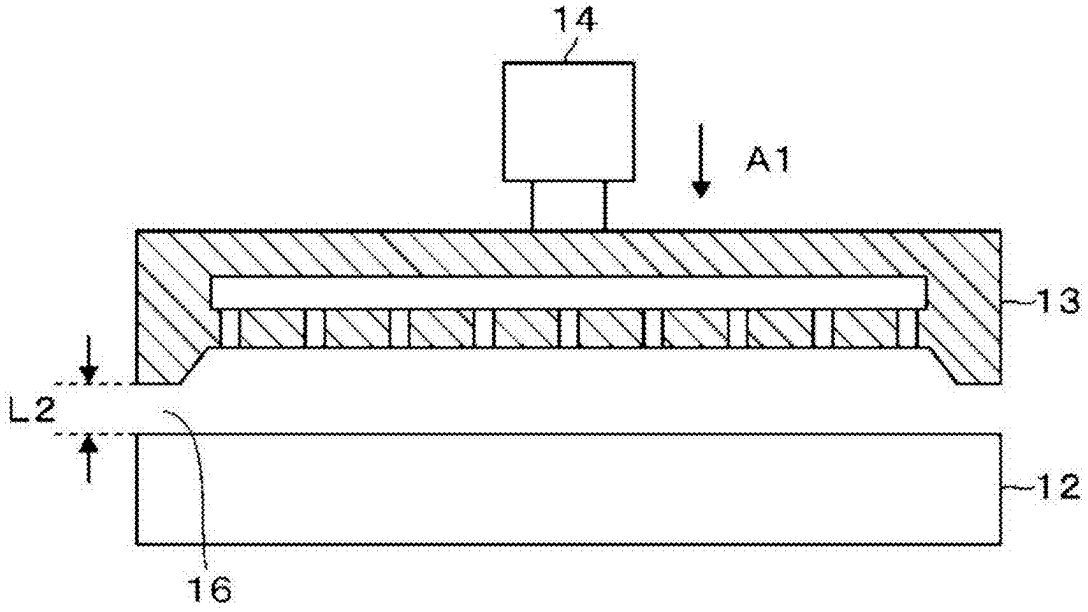

FIG. 13

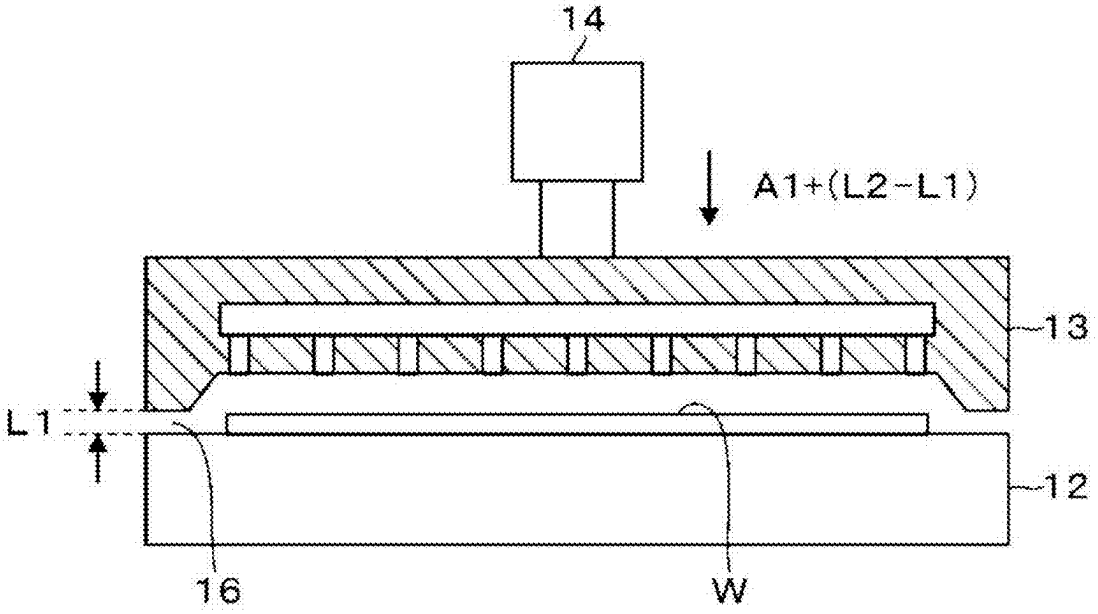

FIG. 14

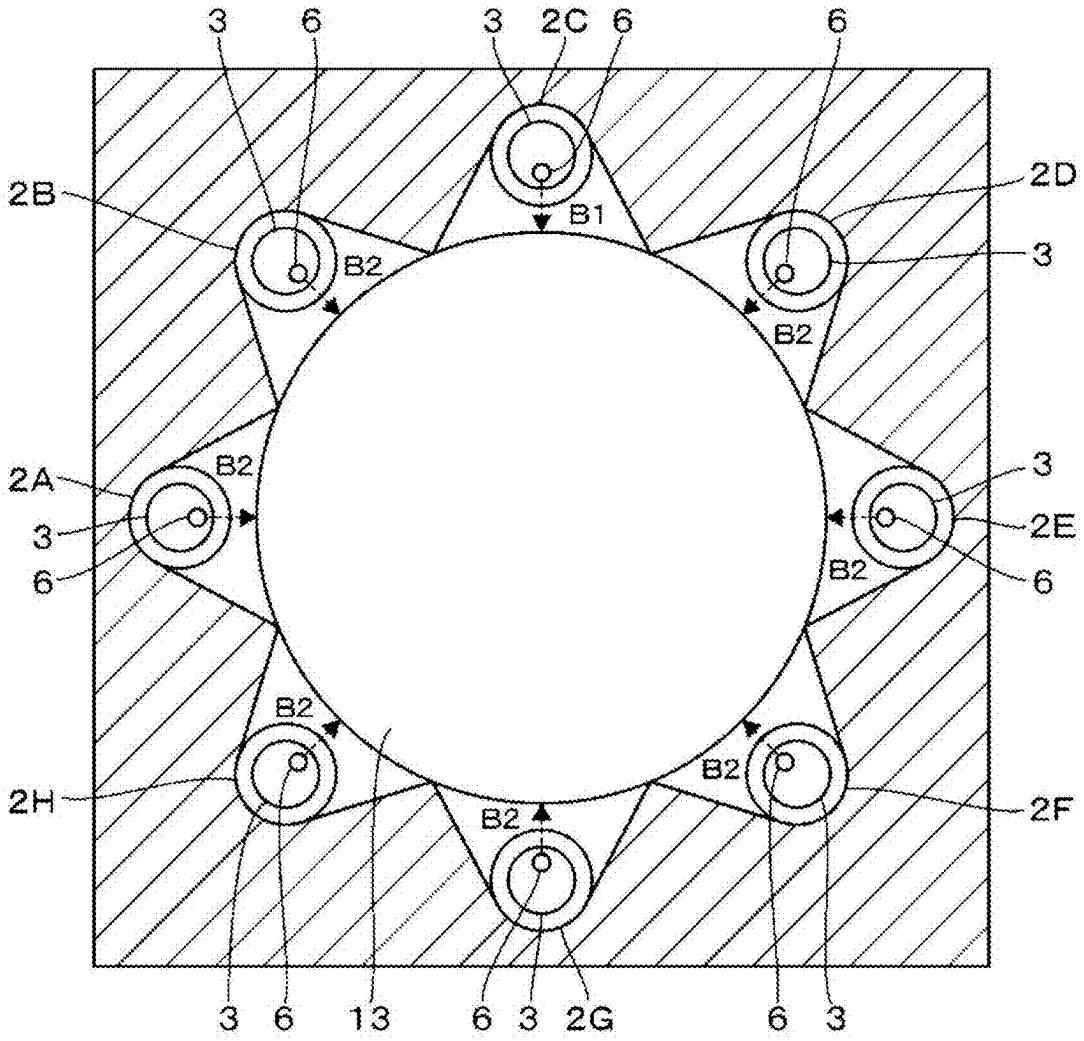
3
6
3
2C
6
6
2B
2D
B1
B2
3
B2
2A
B2
3
3
6
2E
B2
6
B2
B2
2H
B2
2F
B2
3
6
13
6
3
2G
6
3

FIG. 15

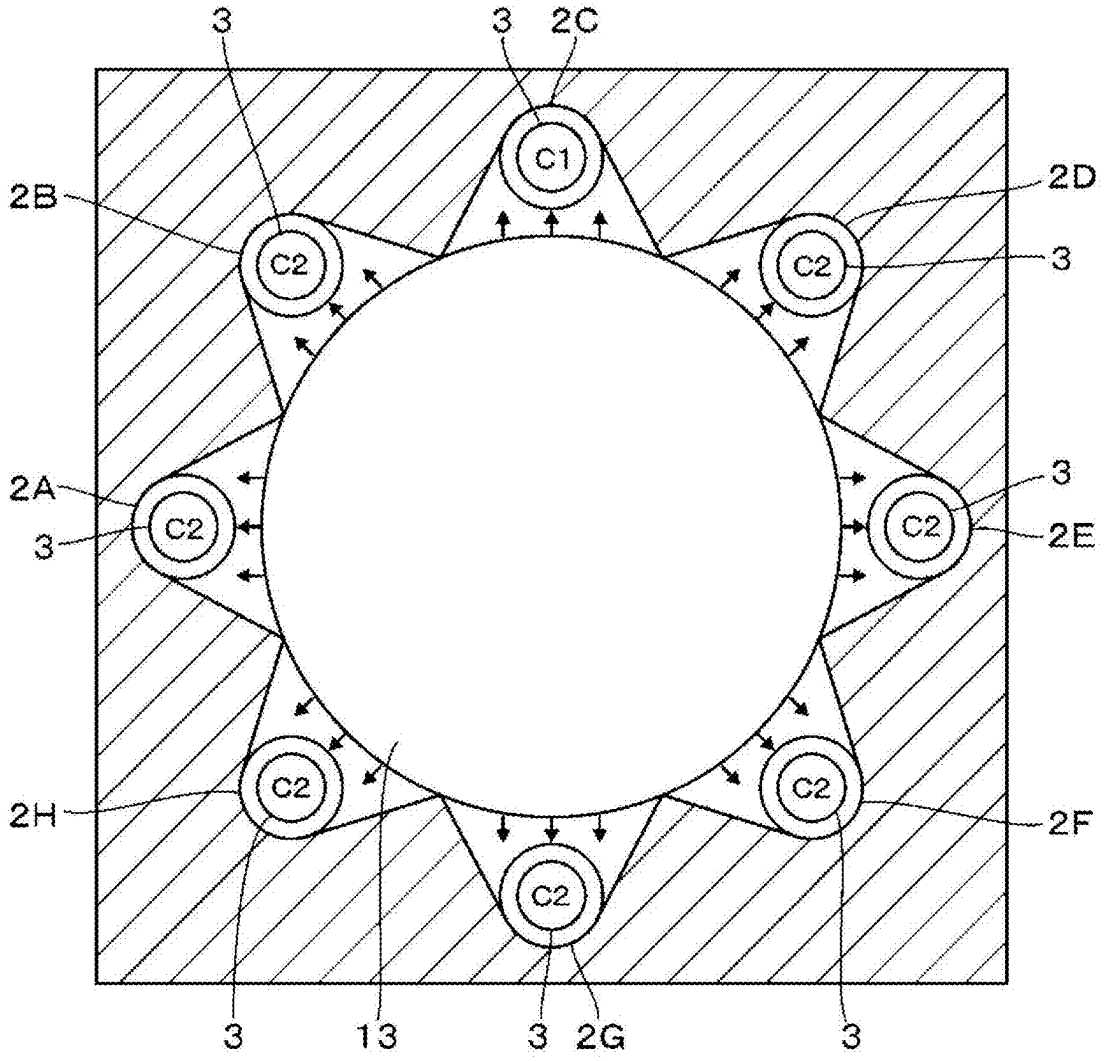

FIG. 16

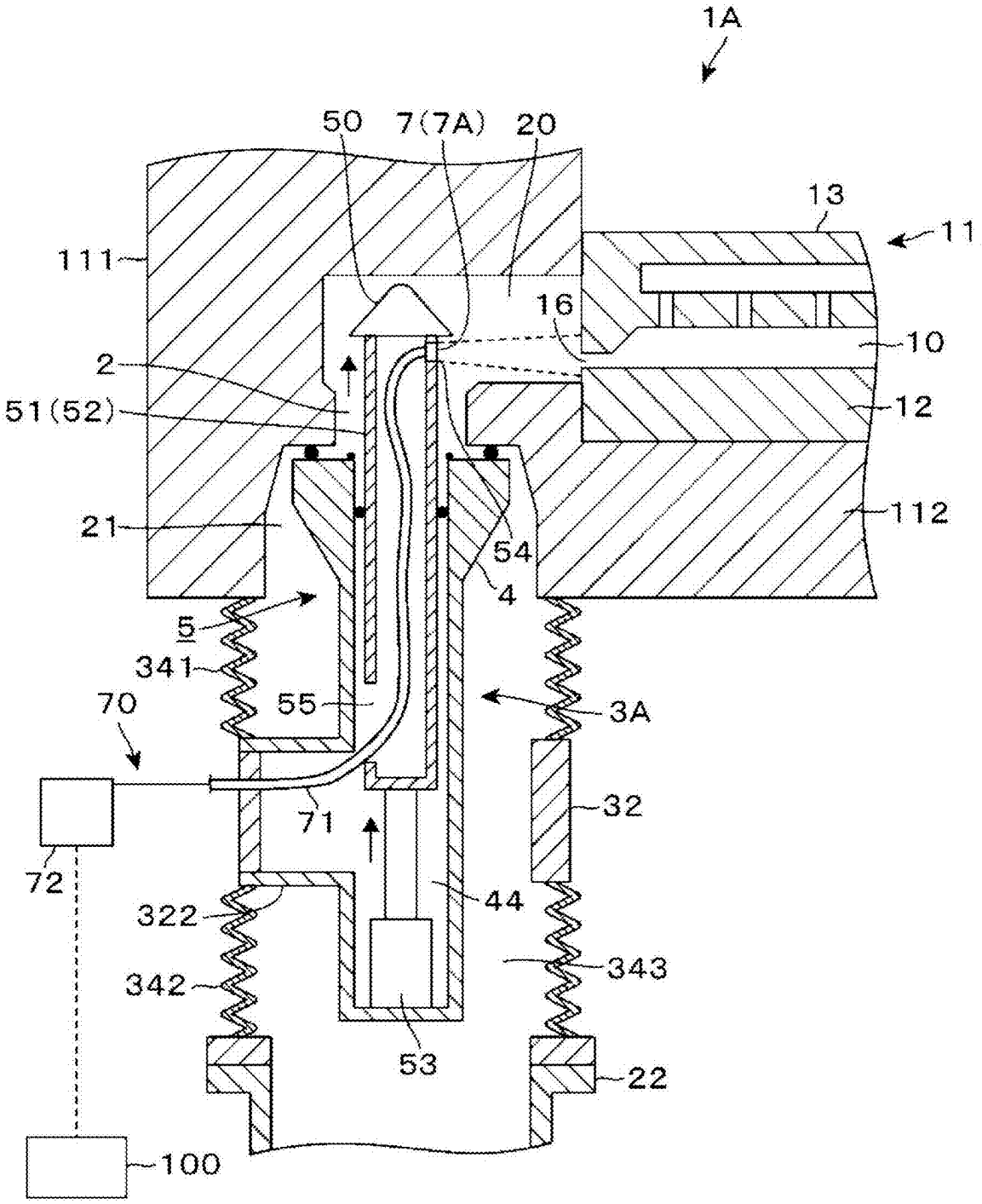
1A
50
7(7A)
20
13
11
111
16
10
2
12
51(52)
21
112
54
4
5
341
70
55
3A
71
32
72
322
44
342
343
53
22
100

FIG. 17

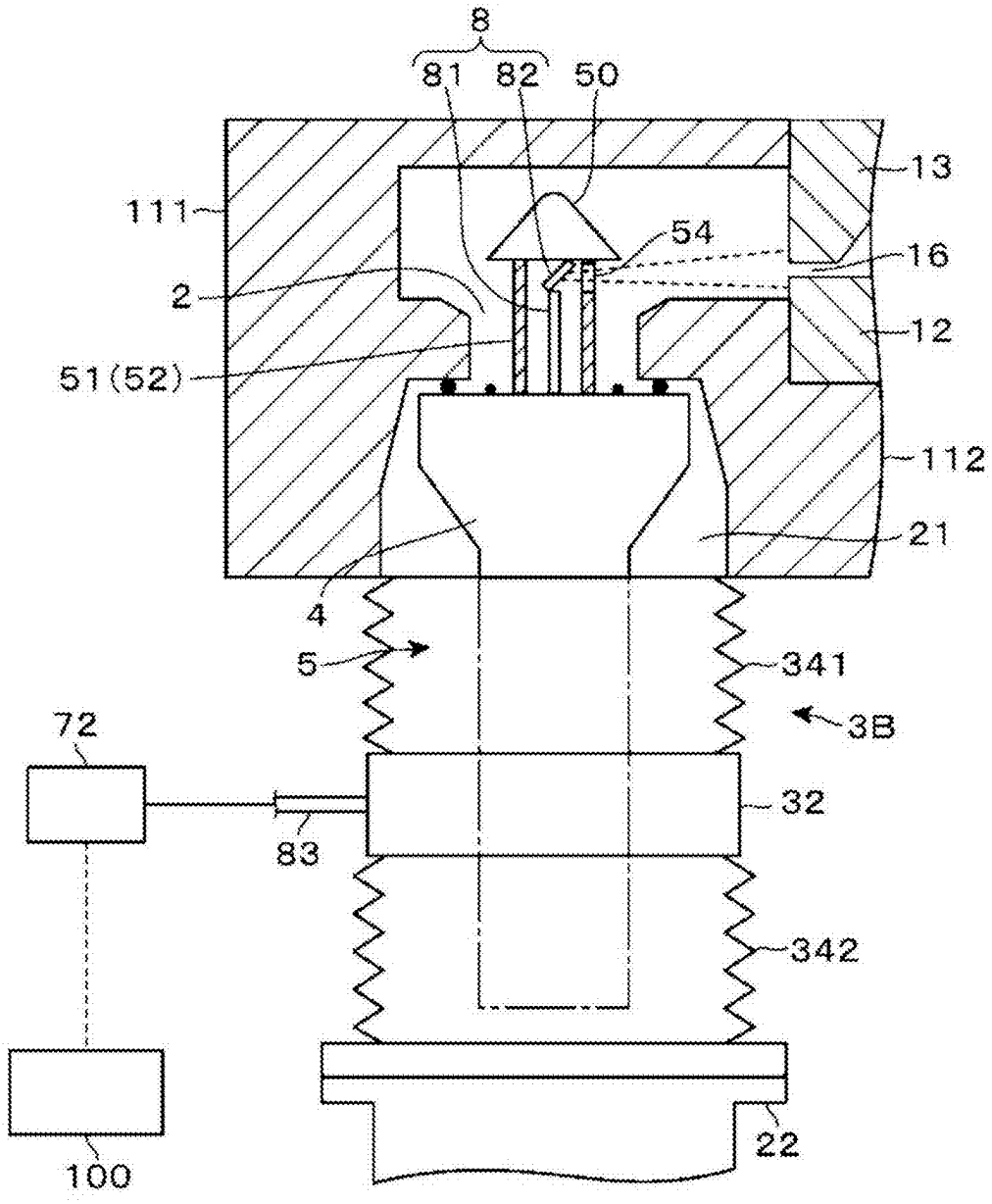

FIG. 18

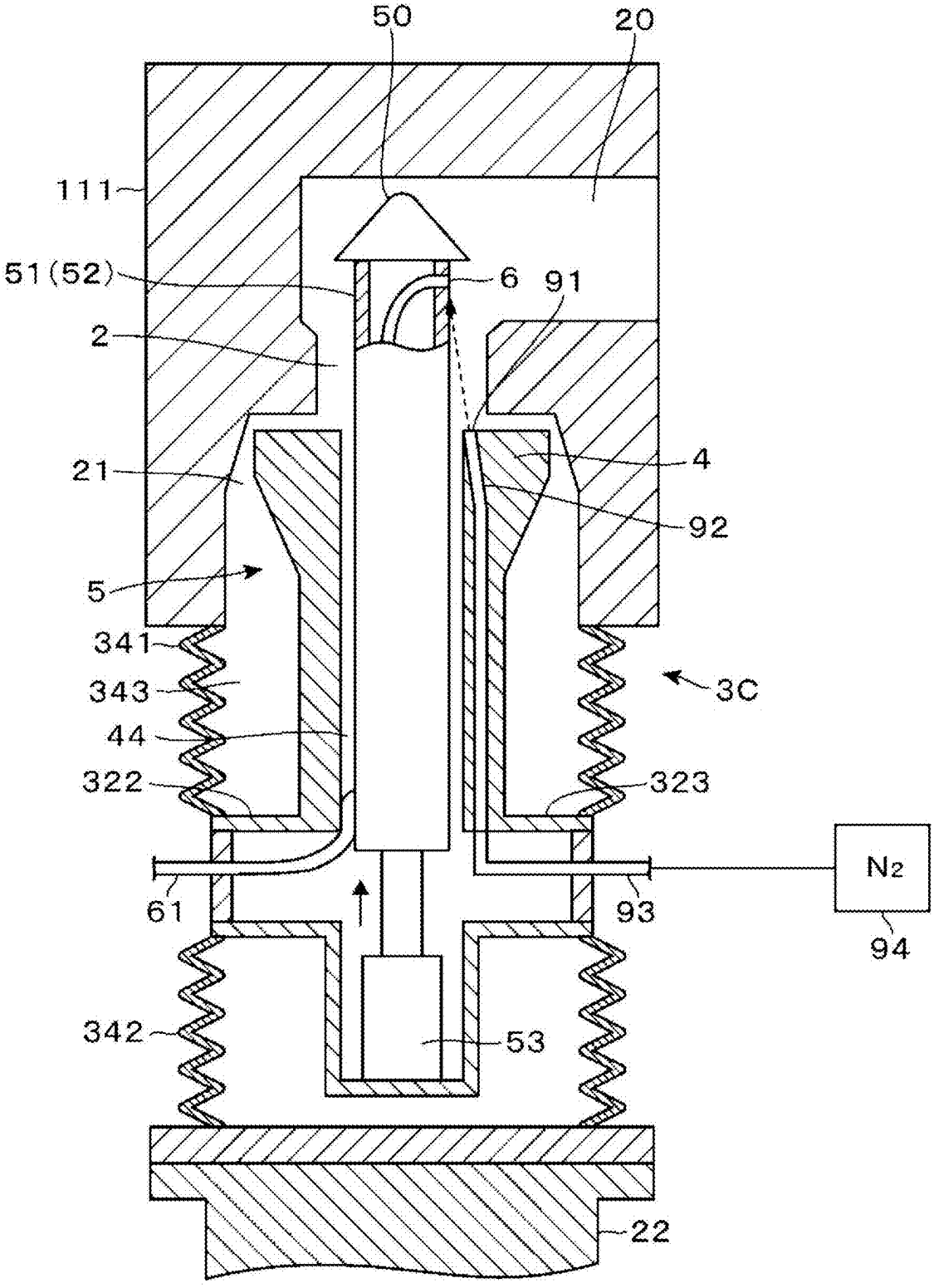
50
20
111
51(52)
6
91
2
21
4
92
5
341
343
44
322
3C
323
N2
61
93
94
342
53
22

FIG. 19

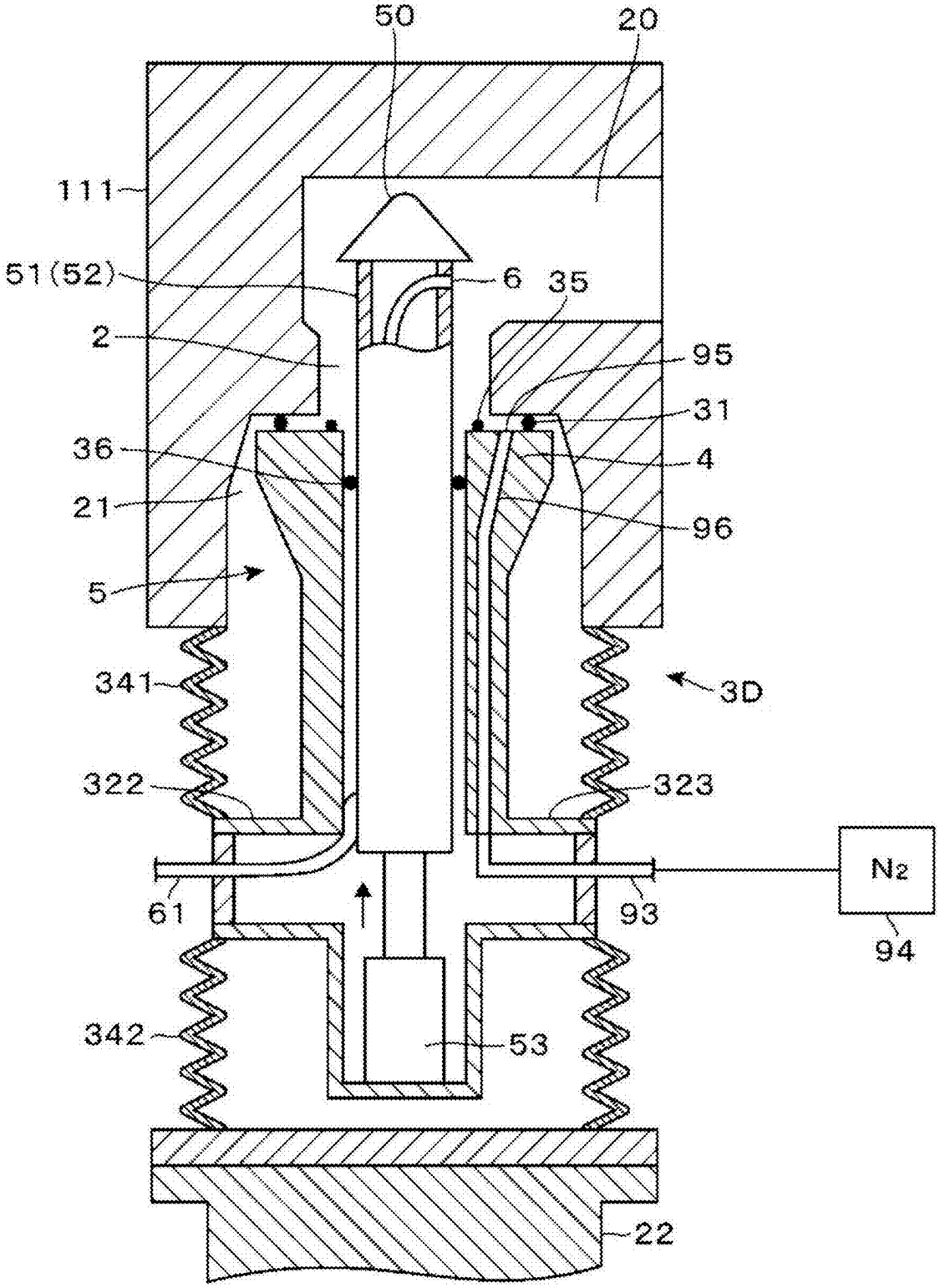
50
20
111
51(52)
6
35
2
95
31
36
4
21
96
5
341
3D
322
323
N2
61
93
94
342
53
22

FIG. 20

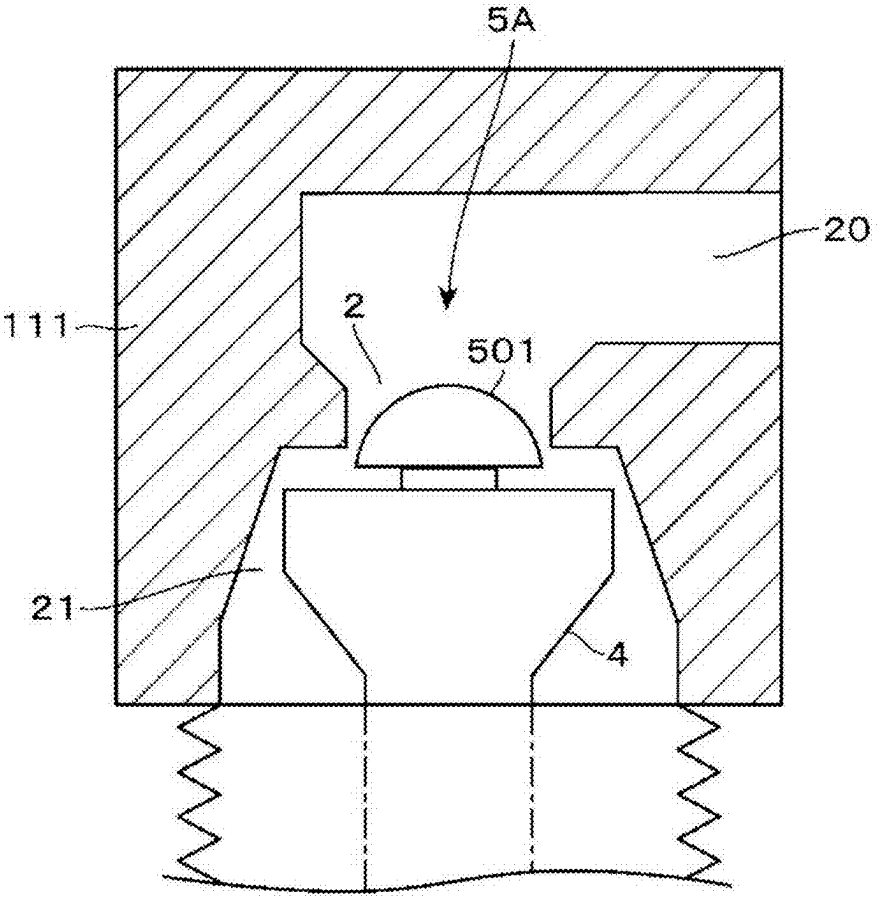

FIG. 21

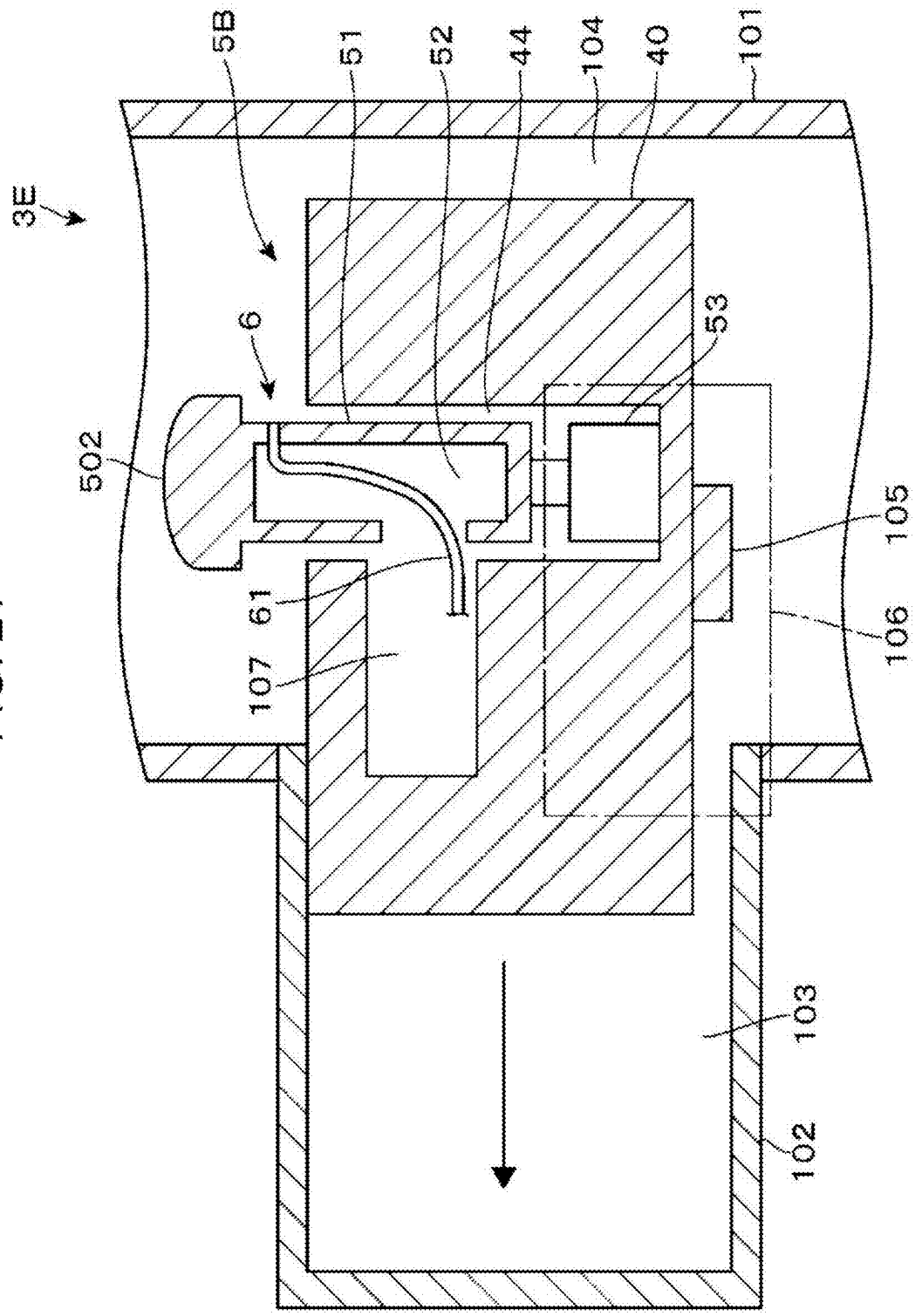

FIG. 22

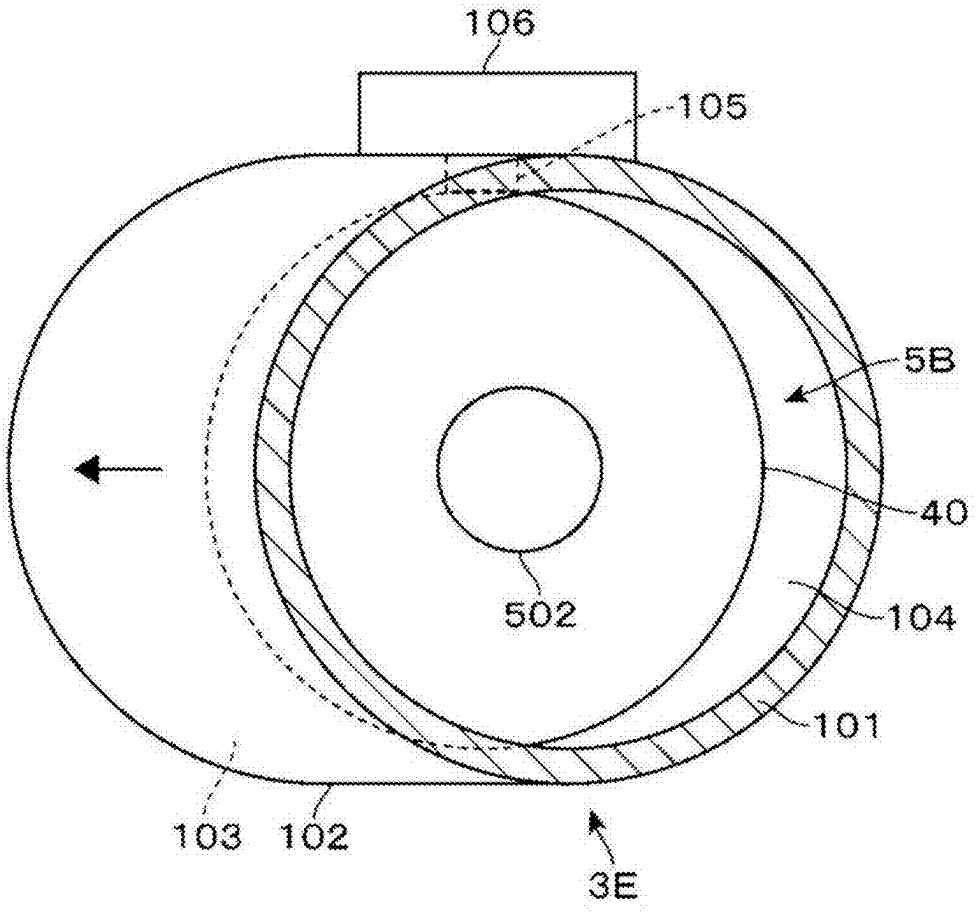

VALVE DEVICE, SUBSTRATE PROCESSING APPARATUS, AND SUBSTRATE PROCESSING METHOD

CROSS-REFERENCE TO RELATED APPLICATION

[0001] This application is based upon and claims the benefit of priority from Japanese Patent Application No. 2024-026151, filed on Feb. 26, 2024, the entire contents of which are incorporated herein by reference.

TECHNICAL FIELD

[0002] The present disclosure relates to a valve device, a substrate processing apparatus, and a substrate processing method.

BACKGROUND

[0003] In a semiconductor manufacturing apparatus that performs processing on a substrate as a workpiece, there is a step of performing film formation on the substrate inside a processing container by supplying a gas from a gas supplier, which is positioned to face a stage, to the substrate placed on the stage, and reducing an internal pressure of the processing container. The gas inside the processing container is exhausted through an exhaust path that is opened or closed by a valve. In relation to this type of film formation performed on the substrate, Patent Document 1 proposes a technique where an endoscope is inserted into a vacuum chamber to observe film formation in progress while a film is being formed on the substrate inside the vacuum chamber. It is described that the endoscope is connected to a bellows, enabling horizontal movement thereof by extension and contraction of the bellows.

PRIOR ART DOCUMENTS

Patent Documents

[0004] Patent Document 1: Japanese Laid-Open Publication No. H 08-193964

SUMMARY

[0005] According to one embodiment of the present disclosure, a valve device, provided in a processing apparatus including a processing container for processing a workpiece, includes: a valve body including a valve main body configured to open or close an exhaust path connected to an exhaust port that opens into the processing container and a mover provided in the valve main body to move between a first position at the exhaust path and a second position upstream of the first position and outside the exhaust port; and a detector including a detection part provided in the mover to detect an internal state of the processing container while the mover is at the second position.

BRIEF DESCRIPTION OF DRAWINGS

[0006] The accompanying drawings, which are incorporated in and constitute a part of the specification, illustrate embodiments of the present disclosure, and together with the general description given above and the detailed description of the embodiments given below, serve to explain the principles of the present disclosure.

[0007] FIG. **1** is a vertical cross-sectional view illustrating a configuration example of a substrate processing apparatus including a valve device.

[0008] FIG. **2** is a vertical cross-sectional view illustrating a configuration example of the substrate processing apparatus during substrate processing.

[0009] FIG. **3** is a plan view illustrating a configuration example of the substrate processing apparatus.

[0010] FIG. **4** is a vertical cross-sectional view illustrating a first embodiment of the valve device.

[0011] FIG. **5** is a perspective view illustrating the first embodiment of the valve device.

[0012] FIG. **6** is a vertical cross-sectional view illustrating an operation in an open state of the valve device.

[0013] FIG. **7** is a vertical cross-sectional view illustrating an operation at another position in the open state of the valve device.

[0014] FIG. **8** is a vertical cross-sectional view illustrating the first embodiment of the valve device.

[0015] FIG. **9** is a vertical cross-sectional view illustrating an example of detecting a lower end of a gas supplier by a detection part.

[0016] FIG. **10** is a vertical cross-sectional view illustrating an example of detecting a height of a stage by the detection part.

[0017] FIG. **11** is a plan view illustrating an example of detection by the detection part.

[0018] FIG. **12** is a vertical cross-sectional view illustrating a detection operation by the detection part.

[0019] FIG. **13** is a vertical cross-sectional view illustrating a detection operation by the detection part.

[0020] FIG. **14** is a plan view illustrating another example of detection by the detection part.

[0021] FIG. **15** is a plan view illustrating another example of detection by the detection part.

[0022] FIG. **16** is a vertical cross-sectional view illustrating a second embodiment of the valve device.

[0023] FIG. **17** is a vertical cross-sectional view illustrating another example of the second embodiment of the valve device.

[0024] FIG. **18** is a vertical cross-sectional view illustrating a first modification of the valve device.

[0025] FIG. **19** is a vertical cross-sectional view illustrating a second modification of the valve device.

[0026] FIG. **20** is a vertical cross-sectional view illustrating another example of a valve body.

[0027] FIG. **21** is a vertical cross-sectional view illustrating another configuration example of the valve device.

[0028] FIG. **22** is a plan view illustrating another configuration example of the valve device.

DETAILED DESCRIPTION

[0029] Reference will now be made in detail to various embodiments, examples of which are illustrated in the accompanying drawings. In the following detailed description, numerous specific details are set forth in order to provide a thorough understanding of the present disclosure. However, it will be apparent to one of ordinary skill in the art that the present disclosure may be practiced without these specific details. In other instances, well-known methods, procedures, systems, and components have not been described in detail so as not to unnecessarily obscure aspects of the various embodiments.

<Substrate Processing Apparatus>

[0030] The present disclosure relates to a processing apparatus including a processing container for processing a workpiece, in which an exhaust path extending into the processing container is opened or closed by a valve device, and the valve device is provided with a detection part to detect an internal state of the processing container.

[0031] First, a configuration example of the processing apparatus according to the present disclosure is described with reference to FIG. **1** by using an example where it is applied to a substrate processing apparatus that performs film formation by atomic layer deposition (ALD) on a semiconductor wafer (hereinafter referred to as "wafer") W, which is a substrate serving as the workpiece.

[0032] As illustrated in FIG. **1**, the substrate processing apparatus **1** includes a processing container **11** that accommodates and processes the wafer W. The processing container **11** is formed into a rectangular shape in a plan view, for example, and a stage **12** on which the wafer W is placed is provided in an interior of the processing container **11**. The stage **12** is circular in a plan view and includes an embedded heater **121**. A gas supplier **13** is disposed in a region facing the stage **12** inside the processing container **11**.

[0033] The gas supplier **13** is configured to supply a process gas toward the wafer W placed on the stage **12** in order to process the wafer W. The gas supplier **13** in this example is configured to discharge the process gas in a form of shower toward the stage **12** from multiple outlets **131** formed at a lower surface thereof. However, a configuration of the gas supplier **13** is not limited to this example. For example, the gas supplier **13** may be configured to include a single outlet at a center of the lower surface thereof, instead of providing the multiple outlets **131**.

[0034] The gas supplier **13** constitutes an upper structure and is oriented to face the stage **12** from above. Then, the gas supplier **13** is configured to be capable of moving up and down by a lift **14** between a transfer position (see FIG. **1**) for transferring the wafer W into or out of the processing container **11** and a processing position (see FIG. **2**) below the transfer position for processing the wafer W. The lift **14** also serves as a distance changer that changes a distance between the stage **12** and the upper structure (gas supplier **13**), which is described later.

[0035] The gas supplier **13** is formed into a circular shape in a plan view, for example, and a periphery thereof is surrounded by a sidewall **111** of the processing container **11**. An upper surface of the gas supplier **13** is formed as a flat surface. When the gas supplier **13** is at the transfer position, as illustrated in FIG. **1**, height positions of an upper surface of the sidewall **111** of the processing container **11** and the upper surface of the gas supplier **13** are aligned. In this way, the processing container **11** is defined by the gas supplier **13** serving as the upper structure, the sidewall **111**, and a bottom wall **112**.

[0036] A circular recess **15** is formed on the lower surface of the gas supplier **13**. The recess **15** includes, for example, a flat facing area **151**, which faces the wafer W on the stage **12**, and an outer perimeter area **152** around the facing area **151**, which is formed as an annular flat surface at a lower height position than the facing area **151**. The above-described outlets **131** are opened at the facing area **151**.

[0037] In this way, when the gas supplier **13** is at the processing position, as illustrated in FIG. **2**, a processing space **10** for the wafer W is created between the recess **15** of the gas supplier **13** and the stage **12**. At this time, a gap **16** is created between the annular flat surface of the perimeter area **152** and an upper surface of the stage **12**. When viewed from the wafer W on the stage **12**, the gap **16** is formed to laterally surround the wafer W.

[0038] A size of the gap **16** when the gas supplier **13** is at the processing position, i.e., a distance between a lower end of the perimeter area **152** and the upper surface of the stage **12**, is 1 mm, for example.

[0039] The substrate processing apparatus **1** in this example is configured to alternately supply, for example, two types of gases as the process gas to the processing container **11** to perform film formation on the wafer W by ALD. To this end, a raw material gas source **133**, a reactant gas source **134**, and a replacement gas source **135** are connected to a gas supply port **132** of the gas supplier **13** through a supply path **136**. An upstream of the supply path **136** branches into supply paths, which are equipped respectively with valves V1, V2 and V3, and is connected to the respective sources **133**, **134** and **135**. The process gas in this example includes a raw material gas, a reactant gas, and a replacement gas.

[0040] Further, a transfer port **113**, through which the wafer W is loaded or unloaded into or from the processing container **11** when the gas supplier **13** is at the transfer position, is formed at the sidewall **111** of the processing container **11**. The transfer port **113** is configured to be capable of being opened or closed by a shutter **114**. Furthermore, the processing container **11** is provided with a delivery pin **115**, which is movable up and down to deliver the wafer W between an external transfer mechanism (not illustrated) and the stage **12**.

[0041] The processing container **11** includes a plurality of exhaust ports **2** (**2**A to **2**H) that open into the processing container **11**. In this example, as illustrated in FIGS. **1** and **2**, the exhaust ports **2** are formed at a lateral side of the stage **12** to open upward at a height position lower than the upper surface of the stage **12**.

[0042] The exhaust ports **2** (**2**A to **2**H) are circular in a plan view, and for example, as illustrated in FIG. **3**, are formed in a plural number, for example, eights along a circumferential direction of the stage **12**. These exhaust ports **2** are disposed at equally spaced positions around the stage **12**. The sidewall **111** is provided with an exhaust path **21**, which is connected to each of the exhaust ports **2** and is specifically formed to extend downward from the exhaust ports **2**. A downstream of each exhaust path **21** is connected to a common exhauster **23** through an exhaust pipe **22**. The exhaust path **21** is opened or closed by a valve device **3** provided inside thereof.

[0043] As illustrated in FIG. **2**, an exhaust space **20** is formed at the sidewall **111** of the processing container **11** to communicate with the processing space **10**, which is created by the gas supplier **13** at the processing position and the stage **12**, through the gap **16**. As illustrated in FIG. **3**, the exhaust space **20** is formed to extend toward an outer rim of the processing container **11** while narrowing in width in a plan view toward the outer rim, thus having an approximately triangular shape. The above-described exhaust port **2** opens at a top of this triangle spaced apart from both the stage **12** and the gas supplier **13**.

[0044] Although the gap **16** is formed around an entire circumference of the stage **12** as described above, each portion of the gap **16** faces one of eight exhaust spaces **20**.

In other words, the exhaust spaces **20** are provided to allow for exhaust around an entire circumference of the gap **16**. As illustrated in FIG. **2**, an upper end of each exhaust space **20** is positioned above a lower surface of the perimeter area **152** of the gas supplier **13** at the processing position, and a lower end of the exhaust space **20** is positioned below the upper surface of the stage **12**. This formation of the exhaust space **20** prevents interference with detection of a lower surface height of the perimeter area **152** of the gas supplier **13** and an upper surface height of the stage **12**, which is described in detail later, and further, detection of the size of the gap **16** obtained from these heights.

<Valve Device>

[0045] Next, the valve device **3** is described with reference to FIGS. **4** to **8**. The valve device **3** in this example is an automatic pressure control (APC) valve, and is configured to receive a control signal from a controller **100**, which is described later, to change an opening degree thereof, thereby adjusting an internal pressure of the processing container **11** according to the opening degree. The valve device **3** is provided for each exhaust path **21**, and includes a valve body **5**, which includes a valve main body **4** and a mover **51** that moves up and down relative to the valve main body **4**, as well as a detector **60** for detecting the height of each component mentioned above.

[0046] The valve main body **4** of the valve device **3** is configured to open or close the exhaust path **21**. As illustrated in FIG. **4**, the exhaust path **21** has a larger diameter than the exhaust port **2**, and a connection portion between the exhaust port **2** and the exhaust path **21** expands in diameter to form an annular stepped portion **211**. Furthermore, an upper side of the exhaust path **21** expands in diameter from the stepped portion **211** downward, and a lower end of the exhaust path **21** opens at the bottom wall **112** of the processing container **11**.

[0047] An upper surface of the valve main body **4** is formed as an annular planar portion **41**, and at a position where the exhaust path **21** is blocked as illustrated in FIG. **4**, the planar portion **41** is connected to the stepped portion **211**, formed by the exhaust port **2** and the exhaust path **21**, via a first seal member **31**. The first seal member **31** includes, for example, an O-ring. Although illustrated in a simplified manner in the drawing, a groove is formed in one of the processing container **11** and the valve main body **4**, and the O-ring is positioned in this groove. Then, when blocking the exhaust path **21**, restoring force of the O-ring is used to ensure an airtight seal between the processing container **11** and the valve main body **4**.

[0048] The valve main body **4** includes an inclined portion **42** that tapers downward below the planar portion **41**, and a cylindrical portion **43** that extends vertically below the inclined portion **42**. As illustrated in FIGS. **4** and **5**, the cylindrical portion **43** is supported laterally at an intermediate position in its extending direction by a support member **32** below the processing container **11**, and is connected to a first driver **33** via the support member **32**. The support member **32** includes an annular member **321** formed concentrically with the valve main body **4** and a plurality of, for example, three, connecting members **322**, **323** and **324** connecting the valve main body **4** to the annular member **321**. These connecting members **322** to **324** are positioned, for example, to equally divide the annular member **321** in a circumferential direction, and an interior of one connecting member **322** is formed as a storage space for a detection part **6** to be described later.

[0049] As illustrated in FIG. **4**, a first bellows **341** is provided between an upper surface of the support member **32** and the bottom wall **112** of the processing container **11**, and a second bellows **342** is provided between a lower surface of the support member **32** and the exhaust pipe **22**, with a connecting member **24** interposed between the exhaust pipe **22** and the second bellows **342**. In this way, the exhaust path **21** is connected to the exhaust pipe **22** through an exhaust area **343**, which is surrounded by both the first bellows **341** and the second bellows **342**. As illustrated in FIG. **5**, an opening **325** is formed between the annular member **321** and each of the connecting members **322** to **324** in the support member **32**, allowing the gas to flow downward in the exhaust area **343** through the opening **325**.

[0050] The first driver **33** is formed as, for example, a ball screw mechanism, and is configured such that a lifting member **333** connected to the support member **32** moves up and down when a motor **331** rotates a ball screw **332**. For example, the motor **331** includes an encoder, and position data of the encoder is output to the controller **100**.

[0051] In this way, the valve main body **4** is configured to be stoppable by the first driver **33** between a position where it closes the exhaust path **21** (position illustrated in FIG. **4**) and a plurality of positions where it opens the exhaust path **21** (for example, positions illustrated in FIGS. **6** and **7**). In further detail, the valve main body **4** does not stop only at two positions, i.e., the positions for opening and closing the exhaust path **21** (i.e., simply opening and closing the exhaust path **21**) but may stop at any height position where it opens the exhaust path **21**.

[0052] In addition, when the exhaust path **21** is open, the lower the valve main body **4** is positioned, the wider the annular space between an upper end of the valve main body **4** and an inner circumferential surface of the exhaust path **21** (the opening degree of the exhaust path **21** increases), which increases an exhaust flow rate by the exhauster **23**, reducing the internal pressure of the processing container **11**. As described above, the valve main body **4** may stop at any height position (open position) where it opens the exhaust path **21** to regulate the pressure in the interior (the exhaust space **20** and the processing space **10**) of the processing container **11** according to the height position thereof. The internal pressure of the processing container **11** is changed by changing the height position of the valve main body **4**.

[0053] In the valve device **3**, the correlation between the open position of the valve main body **4** and the internal pressure of the processing container **11** is pre-established, and the open position of the valve main body **4** is set based on a set internal pressure of the processing container **11**.

[0054] For a gas flow by exhaust as indicated by the dashed arrows in FIGS. **6** and **7**, the gas flows from the exhaust space **20** toward the exhaust path **21** through the exhaust port **2**, and then from the exhaust area **343** inside the first bellows **341** and second bellows **342** toward the exhaust pipe **22**. In addition, when stopping exhaust inside the processing container **11**, the exhaust path **21** is closed by the valve main body **4**, as illustrated in FIG. **4**. This causes the first seal member **31** to come into close contact with the stepped portion **211**, thereby sealing the exhaust path **21** and blocking the gas flow.

[0055] A first storage space **44** is formed to extend vertically in an interior of the valve main body **4**. For example, the first storage space **44** is formed as an elongated circular recess in a plan view, and the mover **51** is provided in an interior of the first storage space **44**. In this example, the mover **51** forms a second storage space **52** partitioned from the first storage space **44** and includes, for example, a main body **56** formed as a bottomed elongated cylinder.

[0056] A cap **50** is provided on the main body **56** to cover the second storage space **52** from above. When viewed in a plan view, the cap **50** is formed to be smaller than the exhaust port **2** but larger than the main body **56** and the first storage space **44** of the valve main body **4**. As illustrated in FIGS. **4** and **5**, the cap **50** is formed, for example, in an approximately conical shape with a rounded top, and has a flat lower surface. This shape helps to reduce resistance of the cap **50** to the gas flowing from an upper side of the cap **50**, and to guide the gas flow by an inclined surface, which is formed to expand in diameter from the top downward, thus minimizing gas retention and allowing the gas to flow quickly into the exhaust path **21**.

[0057] A second driver **53** is provided in the first storage space **44** to move the mover **51**, and for example, an air cylinder is used as the second driver **53**. The second driver **53** is positioned below the main body **56** and is configured to push up a bottom of the main body **56** and move the mover **51** vertically between a lowered position and a raised position above the valve main body **4**. As such, the first storage space **44** forms a movement path for the mover **51**, and the valve body **5** extends or contracts by movement of the mover **51** between the lowered position and the raised position relative to the valve main body **4**. Then, the above-described first driver **33** raises or lowers not only the valve main body **4** but also the second driver **53** and the mover **51**, both of which are supported by the valve main body **4**. In addition, the second driver **53** is connected to an external power supply via the hollow connecting member **322**.

[0058] When processing the wafer W, the mover **51** is at the lowered position and the valve body **5** is in the contracted state. As illustrated in FIG. **4**, when the mover **51** is at the lowered position, the main body **56** is inside the first storage space **44** in the exhaust path **21**, and the top (cap **50**) of the mover **51** is positioned below an upper end of the exhaust port **2**. When the mover **51** is at such lowered position, the cap **50** does not protrude upward from the exhaust port **2**, thus allowing the gas to flow quickly into the exhaust path **21** without impeding the gas flow. In addition, although the valve main body **4** is set to the open position where it opens the exhaust path **21** until a specified vacuum pressure is achieved before processing, the valve main body **4** may be positioned to close the exhaust path **21** to increase the pressure if a reaction pressure is high when processing the wafer W. In addition, when the exhaust path **21** is closed by the valve main body **4**, it is desirable to set the pressure corresponding to a vacuum region even if there is some amount of gas present.

[0059] When the detection part **6** detects the internal state of the processing container **11** as described later, the mover **51** is at the raised position and the valve body **5** is in the extended state. As illustrated in FIG. **8**, when the mover **51** is at the raised position, the cap **50** protrudes from the exhaust port **2** and is located in the exhaust space **20**. Accordingly, if an interior of the exhaust path **21** is assumed as a first position and an interior of the exhaust space **20** is assumed as a second position, the mover **51** is located at the second position during detection, which is at an exhaust upstream compared to the first position where it is located when processing the wafer W.

[0060] Next, the detector **60** is described. The detector **60** is an optical fiber sensor and includes a fiber bundle **61** in which a light emitting optical fiber and a light receiving optical fiber are combined together, and a detection unit **62**. The fiber bundle **61** is flexible and is connected at its base to the detection unit **62**. In addition, the light emitting optical fiber and the light receiving optical fiber are not distinguished in the drawing.

[0061] Light from a light source included in the detection unit **62** is emitted through the light emitting fiber onto a detection target from a tip of the light emitting fiber. Then, when light reflected from the detection target reaches a tip of the light receiving fiber, the reflected light enters a light receiving element included in the detection unit **62** through the light receiving fiber. The light receiving element sends a detection signal to the controller **100** to be described later upon receiving the light, enabling the detection of the detection target. The detector **60** as described above is configured as a reflective photoelectric sensor. In addition, the detection target includes the stage **12** and the gas supplier **13**, and as to be described in detail later, a height of the gap **16** formed between the stage **12** and the gas supplier **13** is measured by detecting the height position of these respective members.

[0062] An opening **54** is formed at a sidewall upper portion of the main body **56** of the mover **51** to provide communication between the second storage space **52** inside the mover **51** and an outside of the mover **51**. A tip of the fiber bundle **61** constituting the detection part **6** is positioned at the opening **54** and is disposed to enable horizontal light emission toward a center of the processing container **11** in a plan view.

[0063] A vertically elongated opening **55** is formed at a lower portion of the main body **56** to overlap in position with the hollow connecting member **322** of the support member **32** as viewed in an extending direction of the connecting member **322**. To describe in more detail, when the mover **51** is at the lowered position, an entire height of the opening **55** overlaps with the space formed by the connecting member **322**, and when the mover **51** is at the raised position, only a lower side of the opening **55** overlaps with the space formed by the connecting member **322**.

[0064] The fiber bundle **61** is disposed to extend downward from the opening **54** through the second storage space **52**, with the base thereof drawn outside the support member **32** through the connecting member **322** from the opening **55** and connected to the detection unit **62**. In addition, the aforementioned detection part **6** corresponds to a tip portion of the fiber bundle **61** that performs light emission and light reception. The tip portion of the fiber bundle **61** includes the tip of the fiber bundle **61** positioned at the opening **54** as well as a portion of the fiber bundle **61** located inside the second storage space **52**.

[0065] As described above, the fiber bundle **61** is provided in the mover **51**, so that the detection part **6**, which forms the tip portion of the fiber bundle **61**, moves up and down along with the mover **51**. The second storage space **52**, which is formed by the mover **51** and stores the detection part **6**, may serve as a space to isolate and protect the detection part **6**

from each gas flowing outside the valve body **5**. When the mover **51** is at the lowered position, the opening **54** where the tip of the fiber bundle **61** constituting the detection part **6** is positioned is located inside the first storage space **44**. In this lowered position state, a second seal member **35**, which is described later, seals a gap between an outer circumferential surface of the mover **51** and an inner circumferential surface of the valve main body **4**, preventing the process gas used for processing the wafer W from adhering to the tip of the fiber bundle **61** through the opening **54**.

[0066] Then, when the mover **51** is at the raised position, the opening **54** is positioned above the first storage space **44**. More specifically, by positioning the opening **54** at the exhaust space **20**, optical detection as described above may be performed during the vertical movement of the valve body **5** by the first driver **33**. Hereinafter, when referring to a height position of the detection part **6** while the mover **51** is at the raised or lowered position, it may also be stated as the detection part **6** being at the raised or lowered position.

[0067] Further, the second seal member **35** is provided on a top of the valve main body **4** to surround an opening of the first storage space **44** and comes into close contact with a lower surface perimeter of the cap **50** of the mover **51**, which is at the lowered position. Therefore, when the mover **51** is at the lowered position, the gap formed between the mover **51** and the valve main body **4** is sealed as described above. Furthermore, a third seal member **36** is provided between the second storage space **52** and the first storage space **44** of the valve main body **4**, and, for example, sliding bearing members **371** and **372** are provided at two upper and lower positions. These second seal member **35** and third seal members **36** are configured in the same way as the first seal member **31**.

[0068] In this way, the mover **51** is configured to move quickly between the lowered position and the raised position inside the first storage space **44** by the second driver **53** while ensuring airtightness. The third seal member **36** is positioned below the opening **54** of the mover **51**, which is at the raised position, and is provided to separate the atmospheric atmosphere from the vacuum atmosphere. In addition, for the convenience of illustration, the first to third seal members **31**, **35** and **36** and the sliding bearing members **371** and **372** may be omitted from the drawings.

[0069] The substrate processing apparatus **1** having the above-described configuration includes the controller **100** as illustrated in FIG. **1**. The controller **100** is configured with a computer including a storage storing a program, a memory, and a CPU. The program is configured to output controls necessary for performing the processing of the wafer W or control signals to control the processing of the wafer W as necessary based on detection results from the detector **60**, which is described later, from the controller **100** to each component of the substrate processing apparatus **1**.

[0070] Such a program is stored in the storage of the computer, such as a computer readable flexible disk, compact disk, hard disk, magneto-optical (MO) disk, or non-volatile memory, and is installed in the controller **100** after being read from the storage.

[0071] A brief description of the processing of the wafer W performed by the substrate processing apparatus **1** is provided. First, with the gas supplier **13** located at the transfer position, the wafer W is loaded into the processing container **11** through the transfer port **113** and is placed on the stage **12**. Subsequently, the gas supplier **13** is lowered to the processing position, the interior of the processing container **11** is set to a preset pressure, and the wafer W on the stage **12** is heated to a set processing temperature between 400 degrees C. and 800 degrees C. by the heater **121**. Then, the raw material gas and the reactant gas are alternately supplied in the order of raw material gas→replacement gas→reactant gas→replacement gas from the gas supplier **13** into the processing space **10**, forming a thin film on the wafer W by ALD.

[0072] At this time, the interior of the processing container **11** is exhausted by the exhauster **23** via the valve device **3**, and is adjusted to a preset pressure range by controlling the opening degree of the valve device **3**. In other words, the valve body **5** of the valve device **3** is positioned at a height depending on a set internal pressure of the processing container **11**. The process gas and replacement gas supplied into the processing space **10** flows from the gap **16**, which is formed at the lateral side of the stage **12** to surround the stage **12**, toward the exhaust port **2**. Then, these gases are guided by the cap **50** forming the top of the valve body **5** to flow toward an outside of the valve main body **4**, thus being exhausted through the exhaust path **21**.

[0073] By the way, in the substrate processing apparatus **1**, the exhaust path **21** is disposed at equally spaced positions in the circumferential direction at the lateral side of the processing space **10** to equalize an exhaust volume inside the processing space **10** along the circumferential direction, thereby improving in-plane uniformity of processing for the wafer W. At this time, since the exhaust volume from the processing space **10** to the exhaust space **20** varies depending on the size (height) of the gap **16** between the gas supplier **13** and the stage **12**, it is important to maintain a consistent size of the gap **16** along the circumferential direction. Further, retention of the gas inside the processing space **10** varies depending on the size of the gap **16**, making it necessary to manage the size of the gap **16** in order to achieve a desired amount of processing (in this case, film formation amount) for the wafer W. However, the gap **16** may deviate from a preset size due to thermal expansion of the stage **12** or the gas supplier **13** resulting from a relatively high processing temperature of the wafer W as well as changes over time.

[0074] For this reason, detecting the size of the gap **16** is required, but this detection is challenging when an internal temperature of the processing container **11** is high. For example, a method using a pressure detection sheet fitted into the gap **16** to measure the size of the gap **16** confronts issues with heat resistance of the sheet. Further, although a method using a sensor to check the gap **16** from the atmosphere by providing a window on the processing container **11** may also be considered, this method has issues of verification being impossible due to deposits attached to the window and deterioration in temperature uniformity inside the processing container **11** due to material differences of the processing container **11**, which may adversely affect the processing.

[0075] Therefore, in the present disclosure, the detector **60** is provided in the valve device **3** of the processing container **11** and is configured to enable detection of the internal state of the processing container **11**.

[0076] Next, detection of the state of the processing container **11** by the valve device **3** is described. Although the detection of state of the processing container **11** is performed, for example, during startup or regular maintenance

of the apparatus, a case where detection is performed while the stage **12** is heated after performing film formation on a predetermined number of wafers W in the substrate processing apparatus **1** is described herein by way of example.

[0077] In this example, the internal state of the processing container **11** detected by the detector **60** is the distance between the gas supplier **13** (upper structure) and the stage **12**, i.e., the size of the gap **16**. As already described, the size of the gap **16** is defined as the distance between the lower surface of the perimeter area **152** of the gas supplier **13**, which is at the processing position, and the upper surface of the stage **12**, but may also be described as the distance between the gas supplier **13** and the stage **12**.

[0078] Then, when performing detection by the detector **60**, the gas supplier **13** remains at the processing position, and as illustrated in FIG. **9**, the valve body **5** is located at a height position (detection start position) where it temporarily closes the exhaust path **21**, and the mover **51** is raised to the second position by the second driver **53**. Thus, the tip of the fiber bundle **61** constituting the detection part **6** is positioned at a height above the lower end (the lower surface of the perimeter area **152**) of the gas supplier **13**, which is at the processing position. In addition, the detection by the detection part **6** may be performed while continuing the exhaust by the exhauster **23**, or may be performed while the exhaust is stopped, based on timing of performing the detection, but herein, the exhaust is described to continue.

[0079] Next, detection by the detection part **6** starts. This detection is performed by lowering the valve body **5** by the first driver **33** while light from the light source is emitted laterally from the detection part **6**, with reflected light from the gas supplier **13** or the stage **12** being received by the detection part **6**. The motor **331** lowers the valve body **5** (i.e., increases the opening degree of the valve), and the detection is performed by scanning. In this way, once the valve body **5** is lowered to a detection stop position at a predetermined height as illustrated in FIG. **10**, the lowering is stopped and the light emission is stopped. As illustrated in FIG. **10**, the detection stop position is a position where the tip of the fiber bundle **61** constituting the detection part **6** is positioned at a height below the upper surface of the stage **12**.

[0080] In this way, by scanning the valve body **5** from the detection start position to the detection stop position, the light emitted laterally from the detection part **6** is reflected by a sidewall of the gas supplier **13** or a sidewall of the stage **12** at a height position above or below the gap **16**, and is therefore received by the light receiving element of the detection unit **62**. On the other hand, the light emitted from the detection part **6** may not be received by the light receiving element at a height position where the gap **16** is formed.

[0081] As a result, the detection unit **62** acquires light reception/non-reception data, which is output to the controller **100**. Further, the height position of the valve body **5** is acquired as height position data by the encoder provided in the motor **331** of the first driver **33** and is output to the controller **100**.

[0082] The controller **100** includes a program that associates the light reception/non-reception data with the height position data and calculates the height position where the gap **16** is formed, i.e., the distance between the gas supplier **13** (upper structure) and the stage **12**. In this way, the controller **100** acquires the distance between the gas supplier **13** and the stage **12** (the size of the gap **16**) as an example of the internal state of the processing container **11** based on the detection results from the detector **60**.

[0083] Through the operation of each valve device **3**, as described above, the size of each circumferential portion of the gap **16**, which is connected to the processing space **10** and is formed into an annular shape, may be acquired. If there is a variation in the size of each portion of the gap **16**, the flow rate of the gas flowing through each circumferential portion in the plane of the wafer W during the processing of the wafer W may differ, potentially leading to variation in processing states across each portion. Therefore, if the size of the gap **16** detected in any valve device **3** deviates from an allowable range or if there is a significant variation in the size of each portion of the gap **16**, the user needs to temporarily stop the operation of the apparatus to perform maintenance on each component of the apparatus so that the size of the gap **16** falls within a normal range.

[0084] By the way, the substrate processing apparatus **1** is provided with three or more valve devices **3**, which advantageously enables acquisition of an inclination of each of the gas supplier **13** and the stage **12** with respect to a horizontal plane, in addition to the size of the gap **16**.

[0085] To specifically describe the inclination acquisition procedure, the same detection operation as described above for the size of the gap **16** is performed using three or more valve devices **3**. In FIG. **11**, an example is illustrated in which the detection operation is performed by the valve devices **3** provided in exhaust ports **2**C, **2**F and **2**H while assuming there are eight exhaust ports **2** designated as exhaust ports **2**A to **2**H. Then, the controller **100** may acquire a lower surface height of the perimeter area **152** of the gas supplier **13** and an upper surface height of the stage **12** from the light reception/non-reception data acquired by the operation of the valve devices **3** and the height position data from the encoder of the motor **331**.

[0086] The controller **100** assumes that three locations, where the height of the gas supplier **13** is acquired, are positioned on the same plane, and calculates an inclination of this plane as the inclination of the gas supplier **13**. Similarly, the controller **100** assumes that three locations, where the height of the stage **12** is acquired, are positioned on the same plane, and calculates the inclination of this plane as the inclination of the gas supplier **13**.

[0087] By determining whether these inclinations are within a preset allowable range, maintenance on the apparatus may be performed if any is out of the allowable range. In addition, although an example is illustrated in which only three valve devices **3** are used to detect the respective inclinations, detection may be performed using more valve devices **3**. In that case, different combinations of three valve devices **3** may be used for inclination calculation, and calculations, such as taking an average of multiple types of inclinations, may be performed to improve accuracy of the calculated inclination.

[0088] Further, in a case where both the gap **16** and the respective inclinations are detected, it is conceivable that the inclinations are within an allowable range, but the gap **16** exceeds an allowable range. In such a case, control is applied as follows. For example, as illustrated in FIG. **12**, it is assumed that the allowable range for the gap **16** is L1 mm, and the detected value (average value) of the gap **16** is L2 mm, with L2>L1.

[0089] At this time, for example, it is assumed that the gas supplier **13** is set to descend by A1 mm from the transfer

position (see FIG. **1**) to the processing position. At this time, the controller **100** changes the descent distance to (A1+(L2−L1)) mm, and outputs a command to the lift **14**, which serves as a distance changer, to move according to the changed setting value.

[0090] In this way, for the wafer W processed after the detection of the gap **16** and the respective inclinations, as illustrated in FIG. **13**, the gas supplier **13** is lowered by the changed distance to adjust the distance between the gas supplier **13** and the stage **12** when supplying the process gas into the processing container **11**, and thereafter, the wafer W is processed as usual. FIG. **13** illustrates a state where the descent distance of the gas supplier **13** has been changed to (A1+(L2−L1)) mm, resulting in the average size of the gap **16** of L1 mm.

[0091] Another handling example after the detection of the gap **16** is described with reference to FIGS. **14** and **15**. In this example, the distance between the gas supplier **13** and the stage **12** is detected as the internal state of the processing container **11**, and based on the detection results, the controller **100** outputs a control signal to the first driver **33** of the valve body **5** to change settings for the opening degree of the valve device **3**, in order to control the processing of the wafer W.

[0092] Specifically, as illustrated in FIG. **14**, for example, the size of the gap **16** is acquired by the detection part **6** provided in all of the exhaust ports **2**A to **2**H, as already described. Herein, it is assumed that a preset size of the gap **16** is B2 mm, and a preset height of each valve body **5** required to maintain a predetermined internal pressure of the processing container **11** is C2.

[0093] Then, FIG. **14** illustrates an example in which the detection results of the gap **16** by the detection part **6** provided in the eight exhaust ports **2**A to **2**H is B1 mm at the exhaust port **2**C and B2 mm at the other exhaust ports **2**A, **2**B and **2**D to **2**H, where B1<B2.

[0094] Herein, the larger the gap **16** between the gas supplier **13** and the stage **12**, the greater the exhaust volume. Accordingly, for example, if exhaust is uniformly performed from each exhaust port **2**, an exhaust volume from a region of the gap **16** connected to the exhaust port **2**C, where the size of the gap **16** is B1 mm, becomes smaller than that from the other regions connected to the other exhaust ports **2** where the gap size is B2 mm. Therefore, in the valve device **3** of the exhaust port **2**C, the height of the valve body **5** is set to a lower height C1 than the height C2 of the valve body **5** of the other valve device **3** to process the wafer W. In other words, for the valve device **3** of the exhaust port **2**C, the opening degree thereof needs to be increased more than that of the valve bodies **5** of the other valve devices **3** so that the small exhaust volume due to the small gap **16** connected to the exhaust port **2**C is compensated (see FIG. **15**). This increases uniformity of the exhaust volume across the entire circumferential direction of the gap **16**, thereby enhancing uniformity of the processing within the plane of the wafer W.

[0095] In addition, the correlation between the deviation from the set value B2 mm for the gap and the amount by which the valve body **5** is set to deviate from the height C2 is stored in advance in the controller **100**, and the height C1 of the valve body **5** described above is obtained by offsetting the amount derived from the correlation from the height C2. Although the description addresses a case where the detected size of the gap **16** is smaller than the set value, if the detected size is larger than the set value, the opening degree of the valve device **3** that detected such a larger value may be reduced according to the correlation stored in the controller **100**. In this way, by setting and changing the opening degree of the valve device **3** according to the size of the gap **16** at each detected position, exhaust volume uniformity in the circumferential direction of the processing space **10** may be controlled.

[0096] By the way, in the above-described example, detection is performed by raising the mover **51** to the second position via the second driver **53** while allowing the detection part **6** to scan by the motor **331**.

[0097] However, if light from the detection part **6** is emitted over a wide range and the gap **16** is included in the light emission range, there is no need for the detection part **6** to scan. As already described, reflected light is not received at the height position where the gap **16** exists, and therefore, an amount of reflected light varies according to the size of the gap **16**. Therefore, for example, the size of the gap **16** may be detected by the amount of reflected light by determining the correlation between the amount of reflected light and the size of the gap **16** in advance.

[0098] As described above, according to the present disclosure, in the processing apparatus including the processing container **11** for processing the wafer W, it is possible to detect the internal state of the processing container **11** by the detection part **6** provided in the valve device **3** that opens or closes the exhaust path **21** connected into the processing container **11**. Accordingly, there is no need to separately install the detection part **6** apart from the valve device **3** to detect the internal state of the processing container **11**, thereby preventing the processing apparatus **1** from becoming larger or more complex. Further, scanning of the detection part **6** is performed using the first driver **33**, which serves to change the opening degree of the valve device **3**, so that there is no need to provide a new lifting mechanism, allowing for a simpler configuration when equipping the detection part **6**.

[0099] Furthermore, since the mover **51** that accommodates the detection part **6** only moves to the exhaust space **20** outside the exhaust port **2** when detecting the internal state of the processing container **11** as already described, this prevents interference with the gas flow from the processing space **10** to the exhaust space **20** during the processing of the wafer W. Accordingly, there is no risk of interference with the processing of the wafer W when performing the optical detection of the internal state of the processing container **11** as described above.

[0100] Further, with the above-described shape of the top (cap **50**) of the valve body **5**, the retention of the process gas around the valve body **5** is prevented during the processing of the wafer W, and components constituting the process gas are prevented from adhering to the valve body **5**. Even if adhesion of such gas components occurs and adhered matters (foreign matters) detaches from the valve body **5** due to the upward movement of the mover **51** when performing the detection, the detached matters flow downward through the exhaust path **21** and are removed since the valve body **5** is provided at the exhaust path **21**. In other words, this configuration of the valve device **3** allows for the detection of the internal state of the processing container **11** while letting the foreign matters (particles) derived from the process gas be removed to outside the exhaust port **2** and preventing them from affecting the processing of the wafer W.

[0101] By the way, for the convenience of description, the perimeter area **152** of the gas supplier **13** defining the gap **16** is described as partitioning the space in which the wafer W is stored, designating the space inside the perimeter area **152** as the processing space **10** where the wafer W is processed and the space outside the gap **16** as the exhaust space **20**. However, since the processing space **10** and the exhaust space **20** communicate with each other through the gap **16**, the processing space **10**, the exhaust space **20**, and the gap **16** may be considered as a single processing space for processing the wafer W. Accordingly, the mover **51** may be said to be located in the exhaust path during detection by the detection part **6**, as well as in the processing space for the wafer W.

[0102] Moreover, the fiber bundle **61** that constitutes the detection part **6** may use a material with relatively high heat resistance, such as quartz glass, to make it less susceptible to radiant heat from the heated high temperature stage **12**. Further, since the base of the fiber bundle **61** is connected to the detection unit **62** outside the valve device **3** and the light source or the light receiving element is spaced apart from the processing container **11**, they are less affected by the heat inside the processing container **11**. Therefore, the configuration of the valve device **3** prevents adverse effects of heat on the light source or the light receiving element, also enabling high-accuracy detection. By equipping the substrate processing apparatus **1** with the valve device **3** in such way, the height detection of each component described above is carried out even when the stage **12** is heated. Therefore, for example, if a processing defect occurs with the wafer W, a relationship between the defect and the size of the gap **16** followed by the thermal expansion of the stage **12** and the gas supplier **13** may be identified, facilitating investigation into the cause and countermeasures.

[0103] In addition, the substrate processing apparatus **1** of the present disclosure is configured such that optical height detection for each of the gas supplier **13** and the stage **12** is performed laterally by the detection part **6**. For example, compared to a configuration in which a reflective distance sensor installed at an arbitrary position of the processing container **11** emits light vertically toward each of the gas supplier **13** and the stage **12** and detects the height of each by receiving reflected light, the above configuration allows for more precise height detection of these components. Therefore, the size of the gap **16** may also be accurately acquired.

Second Embodiment

[0104] Next, a second embodiment of the present disclosure is described with reference to FIG. **16**. A valve device **3**A of this embodiment includes a detector **70** instead of the detector **60**. The detector **70** includes a main body **7**A including a CCD camera (hereinafter referred to as "camera") and a lighting and a detection unit **72**, and the main body **7**A and the detection unit **72** are connected by a flexible cable **71**. The main body **7**A is located at the opening **54** of the mover **51**, and the cable **71** is routed through the mover **51** and the valve main body **4**, similarly to the fiber bundle **61**, so that the base thereof is connected to the detection unit **72**, which is located in the atmospheric atmosphere. Through the wiring in the cable **71**, power is transmitted from the detection unit **72** to the lighting of the main body **7**A, and image data is transmitted from the camera of the main body **7**A to the detection unit **72**.

[0105] The detection unit **72** includes, for example, a display for displaying the image data captured by the camera, and is configured to output the image data to the controller **100**. In the drawing, a portion including the main body **7**A and corresponding to the detection part **6** of the detector **60**, is illustrated as a detection part **7**.

[0106] The lighting emits light toward the center of the processing container **11**. Then, a field of view of the camera is also oriented toward the center of the processing container **11** so as to capture images of an area toward which the light is emitted. In the drawing, an imaging area of the camera is outlined with a dotted line. Aside from these differences, the second embodiment is configured similarly to the first embodiment described above, and the same reference numerals are given to the same components, and further descriptions are omitted.

[0107] In this example, the raised position of the mover **51** is set to a height position where the camera is able to capture images of an area including the gap **16**. Then, when the mover **51** is raised to the second position, the internal state of the processing container **11** is detected by imaging using the detection part **7** without the need for the detection part **7** to scan. In other words, in this example, the internal state of the processing container **11** is detected when the detection part **7** is at the second position, with the exhaust path **21** closed.

[0108] The detected image data is output to the controller **100** via the detection unit **72**, and image processing based on this image data enables determination of the size of the gap **16**, i.e., the height position of the lower end of the gas supplier **13** and the height position of the upper end of the stage **12**. Further, the operator may also inspect the size of the gap **16** based on the image data displayed on the display of the detection unit **72** and input detection results thereof into the controller **100**.

[0109] Then, control on the processing of the wafer W as described in FIGS. **12** to **15** may also be performed by the controller **100** based on the detection results of the detection part **7** in the same manner as in the first embodiment.

[0110] In addition, if the imaging area of the camera is narrow, the internal state of the processing container **11** is detected by the mover **51** performing scanning from the second position (a height position where the camera captures images of an upper side of the gap **16**) to a height position where the camera captures images of a lower side of the gap **16**. In this example as well, it is possible to detect the internal state of the processing container **11** by the detection part **7** provided in the valve device **3**A, achieving the same effects as in the first embodiment.

[0111] The detector **70** may be configured as a so-called fiberscope. Specifically, the cable **71** includes multiple optical fibers, in addition to the wiring, and the portion referred to as the main body **7**A includes a lens and the above-described lighting. Light that passes through the lens and enters the optical fibers may be transmitted to the detection unit **72** through these optical fibers, enabling the detection unit **72** to capture images of the gap **16**.

[0112] Although the examples using flexible linear members, like the fiber bundle **61** and the cable **71**, disposed inside the mover **51** have been provided, the present disclosure is not limited to these configurations. A valve device **3**B illustrated in FIG. **17** demonstrates an example where a rigid metallic tube **81** extending in a vertical direction is disposed inside the mover **51**. A light guide member such as a lens is

provided inside the tube **81**. Then, a mirror **82** is provided at a tip of the tube **81** to change an optical path by 90 degrees. A detection part **8** in this example is configured to include the tube **81** and the mirror **82**.

[0113] The detection unit **72** in this example includes a light source, and light from the light source passes through the light guide member inside the tube **81** and the mirror **82** and is emitted as illumination light toward the center of the processing container **11** through the opening **54** of the mover **51**. Then, the mirror **82** reflects the gap **16** and the surrounding area thereof and the detection unit **72** is configured to acquire images of the gap **16** and the surrounding area thereof via the light guide member inside the tube **81**.

[0114] According to this configuration, the rigid tube **81** surrounds the light guide member, and thus the light guide member does not move inside the second storage space **52** formed by the mover **51**. This enables reducing a size of the second storage space **52** and further prevents the valve device **3** from becoming larger. In addition, in order not to interfere with the vertical movement of the mover **51**, a base of the tube **81** is connected to a flexible light guide member **83** such as an optical fiber, allowing light guidance between the tube **81** and the detection unit **72** via the light guide member **83**.

<First Modification of Valve Device>

[0115] A first modification of the valve device is described with reference to FIG. **18**. A valve device **3**C in this example includes a supply port **91** for an anti-adhesion gas to prevent foreign matters from adhering to the valve body **5**. For example, a gas flow path **92** is formed in the interior of the valve main body **4**, and a tip of the gas flow path **92** opens to the planar portion **41** to form the supply port **91**, which is configured to discharge the anti-adhesion gas toward the detection part **6** at the second position. A base of the gas flow path **92** is connected to a gas supply pipe **93**, and via the gas supply pipe **93**, is connected to a gas source **94** for the anti-adhesion gas, for example, an inert gas such as a nitrogen (N_2) gas. In this example, as illustrated in FIG. **18**, the connecting member **323** of the support member **32** is also configured to include an internal space, enabling the gas supply pipe **93** to be connected to the gas source **94** provided outside the valve device **3**C through the connecting member **323**.

[0116] In this example, supplying the anti-adhesion gas to the detection part **6** when detecting the internal state of the processing container **11** by the detection part **6** prevents the process gas remaining in the processing container **11** from coming into contact with the detection part **6**. As a result, deposition of the foreign matters on the detection part **6** is inhibited, allowing for stable detection and preventing particle generation.

<Second Modification of Valve Device>

[0117] A second modification of the valve device is described with reference to FIG. **19**. A valve device **3**D in this example includes a supply port **95** formed at the upper surface of the valve main body **4**, from which a N_2 gas is discharged as an anti-adhesion gas. Although it is already difficult for any matters derived from the process gas to adhere to the valve body **5** as described above, the discharge of N_2 gas in this manner further enhances the prevention of adhesion. In this example, the supply port **95** is formed at the planar portion **41** of the valve main body **4** between the first seal member **31** and the second seal member **35** to face the exhaust port **2**, but the position thereof is not limited to this example. In addition, a flow path in the valve main body **4** that connects the supply port **95** to the gas source **94** is indicated as a gas flow path **96**.

[0118] In the examples illustrated in FIGS. **18** and **19**, the N_2 gas is discharged from the supply port **95** at least during the processing of the wafer W, and the discharged gas flows around the valve body **5** and is removed by exhaust from the exhaust path **21**. Therefore, as already described, the N_2 gas is supplied to the detection part **6** and the valve body **5**. At this time, the N_2 gas also flows to areas where the first to third seal members **31**, **35** and **36** are provided, preventing deposition of the foreign matters in these areas.

[0119] In addition, the first and second modifications illustrated in FIGS. **18** and **19** are configured similarly to the first and second embodiments, except for the addition of the supply ports **91** and **95** for the anti-adhesion gas. Further, they are applicable to the valve devices **3**, **3**A and **3**B of the first and second embodiments, regardless of whether the detection parts **6**, **7** and **8** perform detection with or without scanning.

[0120] In the above, a valve body **5**A, as illustrated in FIG. **20**, is not limited to a configuration where a cap **501** at the top thereof is shaped as an approximately conical shape with a rounded top as illustrated in FIGS. **4** and **5**, and may alternatively be hemispherical with a flat lower surface. This shape may also reduce resistance of the valve body **5**A to the gas flowing from above the valve body **5**A and guide the gas to quickly flow it into the exhaust path **21**.

[0121] Further, in the configuration where the plurality of exhaust paths **21** are connected to the exhaust port **2** that opens into the processing container **11**, it is not necessary to provide all of the exhaust paths **21** with the valve device of the present disclosure. For example, in the substrate processing apparatus **1** illustrated in FIG. **1**, it may be sufficient to provide three or more exhaust paths **21** selected from eight exhaust paths **21** with the valve device **3** with the detection part **6**. In this case, there is also the exhaust path **21** that is opened or closed by the valve device without the detection part **6**, but this valve device is configured similarly to the above-described valve device **3**, except that the valve main body **4** does not include the detection part **6**, first storage space **44**, mover **51**, and hollow connecting member **322**.

[0122] Furthermore, in the present disclosure, an ultrasonic sensor may be used as the detection part, instead of the optical fiber sensor. In this case, for example, as in the first embodiment, the mover **51** is positioned at the second position, and ultrasonic waves are emitted from the ultrasonic sensor toward the processing container **11** while lowering the valve main body **4** to perform scanning. Then, by acquiring the reflected ultrasonic waves, a height position at which reflection of the ultrasonic waves occurs may be detected, allowing detection of the size of the gap **16**. However, it is desirable to perform optical detection as previously described for higher accuracy detection due to high diffusivity of ultrasonic waves with distance from a radiation source.

[0123] Further, the upper structure of the present disclosure does not necessarily need to be configured as a gas supplier as long as it is configured to create the processing space **10** for the wafer W with the stage **12**. For example, the

upper structure may be configured as an upper electrode that generates a plasma in cooperation with the stage **12**, which serves as a lower electrode. Then, the process gas may be supplied to the processing space **10** created between the upper structure and the stage **12** by using a gas nozzle or the like.

[0124] Furthermore, if the internal state of the processing container **11** is the distance between the upper structure and the stage **12** and if control over substrate processing involves a change in this distance, a lift serving as a distance changer may be provided on the side of the stage **12** to adjust this distance by moving the stage **12** to come into contact with or be separated from the upper structure.

[0125] In the above-described embodiments, the substrate processing apparatus is used for film formation by ALD, but may also be an apparatus performing plasma ALD. Further, as long as an apparatus is capable of supplying a gas to the processing space created between the upper structure and the stage and exhausting the gas through the gap **16** formed to surround the processing space **10** to process the wafer W, the apparatus is not limited to the apparatus performing the film formation by ALD.

[0126] The shape of the processing space in the processing container **11** of the substrate processing apparatus **1** and the number or layout of exhaust ports **2** as described above are examples and are not limited to the above-described configurations.

[0127] Further, the second driver **53** may be a motor, and the first storage space **44** may be configured as a sealed space, where air is supplied to the first storage space **44** to raise the second storage space **52** to the second position and is discharged from the first storage space **44** to lower it to the first position. Furthermore, a heater may be stored in the second storage space **52**. Further, the shape of the valve body **5** is also not limited as long as it is able to accommodate the mover **51** and the detection part **6**.

[0128] Herein, a valve device **3**E, which is a configuration example of another valve device, is described, focusing on differences from the valve device **3** of the first embodiment, with reference to a vertical cross-sectional view in FIG. **21** and a plan view in FIG. **22**. In the drawings, **101** denotes an upright exhaust pipe with an upper end connected to the exhaust port **2**, and exhaust by the exhauster **23** is performed from a lower end of the exhaust pipe **101**. A space forming member **102** is provided on an outer sidewall of the exhaust pipe **101**, and a storage space **103** formed in an interior of the space forming member **102** communicates with a flow path **104** inside the exhaust pipe **101**. A valve body **5**B including a valve main body **40** and the mover **51** is provided at the flow path **104**. Unlike the previous examples, a cap **502** of the mover **51** has a convex lens shape at the top thereof in a side view.

[0129] The valve main body **40** is connected to a driver **106**, which is provided outside the exhaust pipe **101**, through a connector **105**. The driver **106** allows the valve main body **40** to move horizontally to open or close the flow path **104**, and may appropriately adjust a penetration depth of the valve main body **40** into the storage space **103**. An opening area of the flow path **104** varies according to this penetration depth, thereby adjusting the internal pressure of the processing space **10** in the processing container **11** as in the first embodiment. Accordingly, a movement direction of the valve body for the opening and closing of the flow path and the adjustment of the opening degree in the valve device **3**E differs from that in the valve device **3** described previously. Accordingly, the present technology is not limited to applications in valve devices in which the valve body moves in the vertical direction as previously described.

[0130] In addition, the valve main body **40**, which is circular in a plan view, has the same first storage space **44** as the valve main body **4** of the above-described embodiments, and the gap **16** may be detected, similarly to the first embodiment, as the mover **51** is raised from the first position illustrated in FIG. **21** to the second position by the second driver **53** provided in the first storage space **44**. The base of the fiber bundle **61** constituting the detection part **6** is drawn out from the mover **51** and is directed toward a space **107**, which extends horizontally from the first storage space **44**, and then passes through flow paths (not illustrated) inside the connector **105** and the driver **106**, thereby being drawn out from the exhaust pipe **101** and connected to the detection unit **62** (not illustrated in FIGS. **21** and **22**).

[0131] In the above, the substrate has been exemplified as a wafer, but other workpieces processed in the processing container **11** may include a substrate for manufacturing a flat panel display, a substrate for manufacturing an exposure mask used in photolithography, and a dummy substrate processed for the purpose of testing or setting processing parameters in a substrate processing apparatus.

[0132] The embodiments disclosed herein should be considered as illustrative and not restrictive in all respects. The above embodiments may be omitted, replaced or modified in various ways without departing from the scope or spirit of the appended claims.

[0133] According to the present disclosure, in a processing apparatus equipped with a processing container for performing a workpiece, a detection part provided in a valve device may detect an internal state of the processing container.

[0134] While certain embodiments have been described, these embodiments have been presented by way of example only, and are not intended to limit the scope of the disclosures. Indeed, the embodiments described herein may be embodied in a variety of other forms. Furthermore, various omissions, substitutions and changes in the form of the embodiments described herein may be made without departing from the spirit of the disclosures. The accompanying claims and their equivalents are intended to cover such forms or modifications as would fall within the scope and spirit of the disclosures.

What is claimed is:

1. A valve device provided in a processing apparatus including a processing container for processing a workpiece, the valve device comprising:

a valve body including a valve main body configured to open or close an exhaust path connected to an exhaust port that opens into the processing container and a mover provided in the valve main body to move between a first position at the exhaust path and a second position upstream of the first position and outside the exhaust port; and

a detector including a detection part provided in the mover to detect an internal state of the processing container while the mover is at the second position.

2. The valve device of claim **1**, wherein the valve main body is stoppable at each of a plurality of open positions that open the exhaust path, and

wherein an internal pressure of the processing container is changed by movement of the valve main body between the plurality of open positions.

3. The valve device of claim **1**, wherein the detection part serves to perform optical detection.

4. The valve device of claim **1**, wherein the valve main body includes a first storage space that stores the mover and forms a movement path for the mover, and a driver that moves the mover is provided in the first storage space.

5. The valve device of claim **1**, wherein the valve main body includes a first storage space that stores the mover and forms a movement path for the mover, and

wherein the mover forms a second storage space that is partitioned from the first storage space and stores and protects the detection part.

6. The valve device of claim **1**, wherein the valve body becomes a contracted state by the mover positioning at the first position while the exhaust path is open, and

wherein the valve body becomes an extended state by the mover positioning at the second position while the exhaust path is closed.

7. The valve device of claim **1**, wherein the valve main body includes a supply port for an anti-adhesion gas of foreign matter to the valve body and a first storage space that stores the mover and forms a movement path for the mover, and

wherein, when the mover is at the second position, the detection part is located outside the first storage space and the supply port supplies the anti-adhesion gas toward the detection part.

8. A substrate processing apparatus comprising:

a processing container;

a stage provided in an interior of the processing container to place a substrate on the stage;

a gas supplier configured to supply a process gas for processing of the substrate on the stage;

an exhaust port that opens into the processing container to exhaust the process gas;

a valve device provided at an exhaust path connected to the exhaust port;

a valve body included in the valve device and including a valve main body configured to open or close the exhaust path and a mover provided in the valve main body to move between a first position at the exhaust path and a second position upstream of the first position and outside the exhaust port;

a detector included in the valve device and including a detection part provided in the mover to detect an internal state of the processing container while the mover is at the second position; and

a controller configured to output a control signal to perform control over the processing of the substrate based on a detection result from the detection part.

9. The substrate processing apparatus of claim **8**, wherein the processing container is provided with an upper structure facing the stage from above.

10. The substrate processing apparatus of claim **9**, wherein the upper structure is the gas supplier and is provided with an outlet that discharges the process gas toward the stage.

11. The substrate processing apparatus of claim **9**, wherein the internal state of the processing container is a distance between the upper structure and the stage, and a distance changer is provided to change the distance, and

wherein the control over the processing of the substrate is adjustment of the distance when the process gas is supplied to the substrate.

12. The substrate processing apparatus of claim **9**, wherein the exhaust port opens upward, and

wherein the second position is located laterally relative to the upper structure and the stage and above the first position.

13. The substrate processing apparatus of claim **8**, wherein the valve main body is stoppable at each of a plurality of open positions that open the exhaust path,

wherein an internal pressure of the processing container is changed by movement of the valve main body between the plurality of open positions, and

wherein the control over the processing of the substrate is a change in setting of the plurality of open positions according to a set internal pressure of the processing container.

14. A substrate processing method comprising:

placing a substrate on a stage provided in an interior of a processing container;

performing a process by supplying a process gas from a gas supplier to the substrate on the stage;

exhausting the process gas from an exhaust port that opens into the processing container;

opening or closing an exhaust path connected to the exhaust port by using a valve main body included in a valve body;

moving a mover, provided in the valve main body to constitute the valve body together with the valve main body, between a first position at the exhaust path and a second position upstream of the first position and outside the exhaust port;

detecting an internal state of the processing container while the mover is at the second position by using a detector including a detection part provided in the mover; and

controlling the process of the substrate based on a detection result from the detection part.

15. The substrate processing method of claim **14**, wherein the internal state of the processing container is a distance between the stage and an upper structure provided in the processing container to face the stage from above.

* * * * *