US 20250271741A1

(19) United States
(12) Patent Application Publication
YOKOO
(10) Pub. No.: US 2025/0271741 A1
(43) Pub. Date: Aug. 28, 2025

(54) **LIGHT SOURCE DEVICE AND PROJECTOR**

(71) Applicant: **SEIKO EPSON CORPORATION**, Tokyo (JP)

(72) Inventor: **Tomohiro YOKOO**, Matsumoto-shi (JP)

(21) Appl. No.: **19/062,534**

(22) Filed: **Feb. 25, 2025**

(30) **Foreign Application Priority Data**

Feb. 26, 2024 (JP) 2024-026213

Publication Classification

(51) **Int. Cl.**
G03B 21/20 (2006.01)
G03B 21/00 (2006.01)

(52) **U.S. Cl.**
CPC ***G03B 21/204*** (2013.01); ***G03B 21/008*** (2013.01); ***G03B 21/2066*** (2013.01); *G03B 21/208* (2013.01)

(57) **ABSTRACT**

A light source device of the present disclosure includes a first light source emitting a first light, a first wavelength conversion element converting the first light into a second light, a first optical layer transmitting the first light and reflecting the second light, a first light guide portion guiding the second light, a second light source e emitting a third light, a second wavelength conversion element converting the third light into a fourth light, a second optical layer transmitting the third light and reflecting the fourth light, a second light guide portion guiding the fourth light, and a first reflection member. The second wavelength conversion element is disposed at a side opposite to the first light source with respect to the first wavelength conversion element. The second light travels through the first light guide portion and is emitted from a region of the first light guide portion at a third surface side, and the fourth light travels through the second light guide portion and is emitted from a region of the second light guide portion at a sixth surface side.

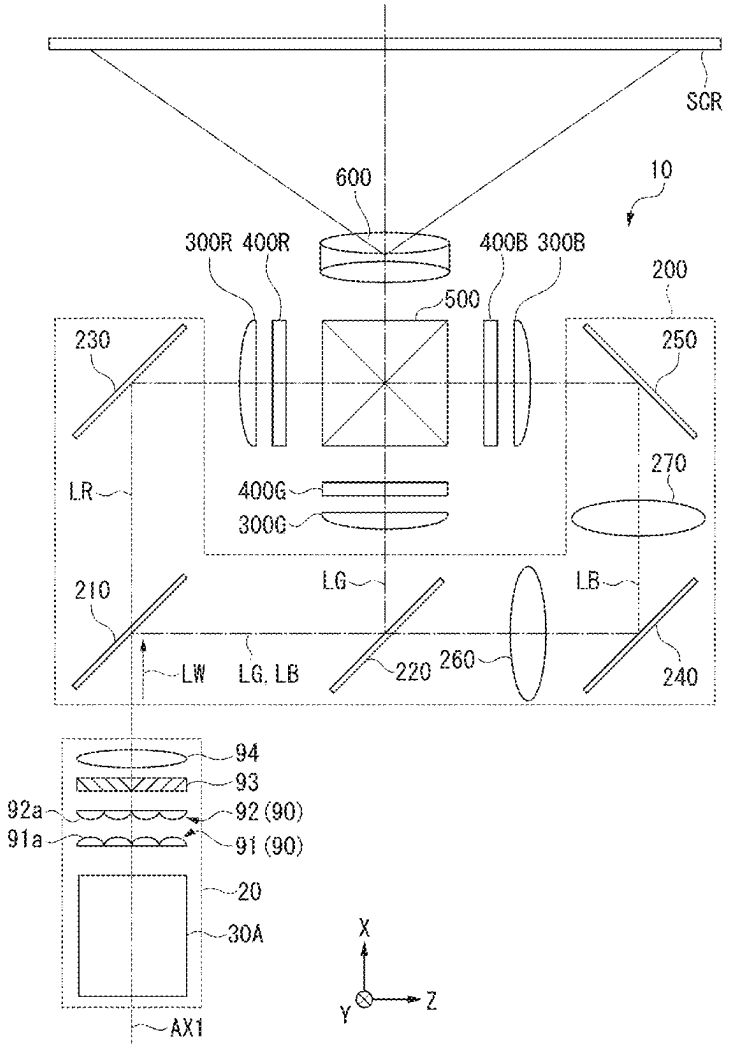

FIG. 1

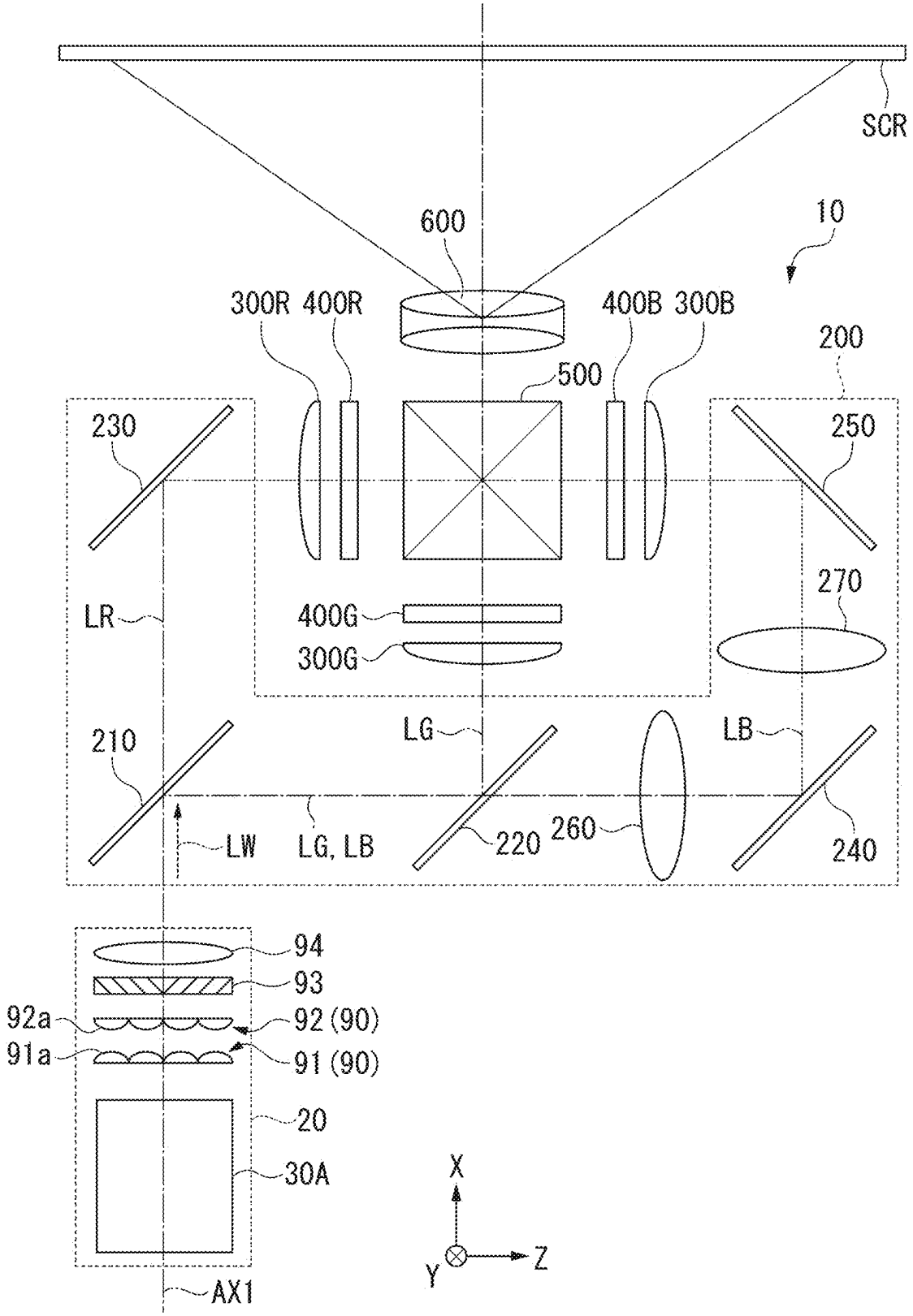
SCR
600
10
300R
400R
400B
300B
200
500
230
250
270
LR
400G
300G
LG
LB
210
LW
LG, LB
220
260
240
94
93
92a
92 (90)
91a
91 (90)
20
30A
AX1
X
Y
Z

FIG. 2

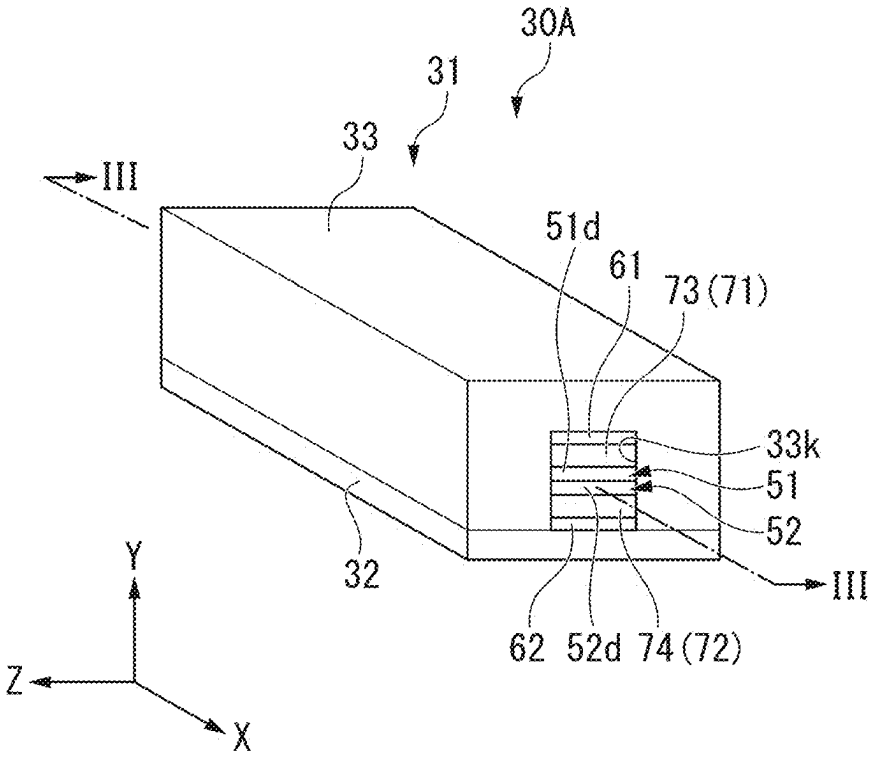

FIG. 3

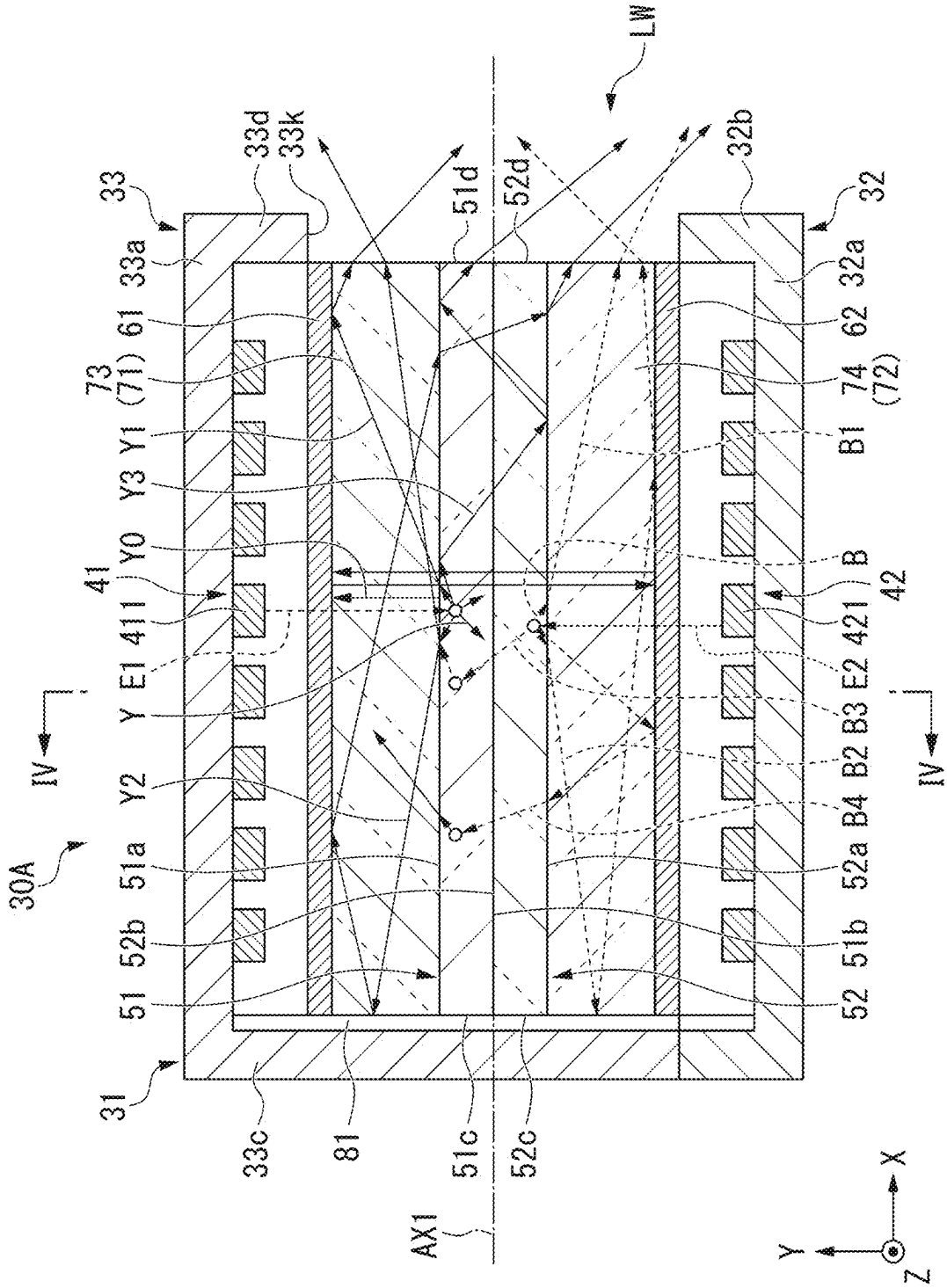
LW
33
33a
33d
33k
51d
52d
32b
32
32a
61
62
73
(71)
74
(72)
Y1
B1
Y3
Y0
B
41
411
42
421
Y
E1
E2
B3
Y2
B2
B4
IV
IV
30A
51a
52a
52b
51b
51
52
31
33c
81
51c
52c
AX1
X
Y
Z

FIG. 4

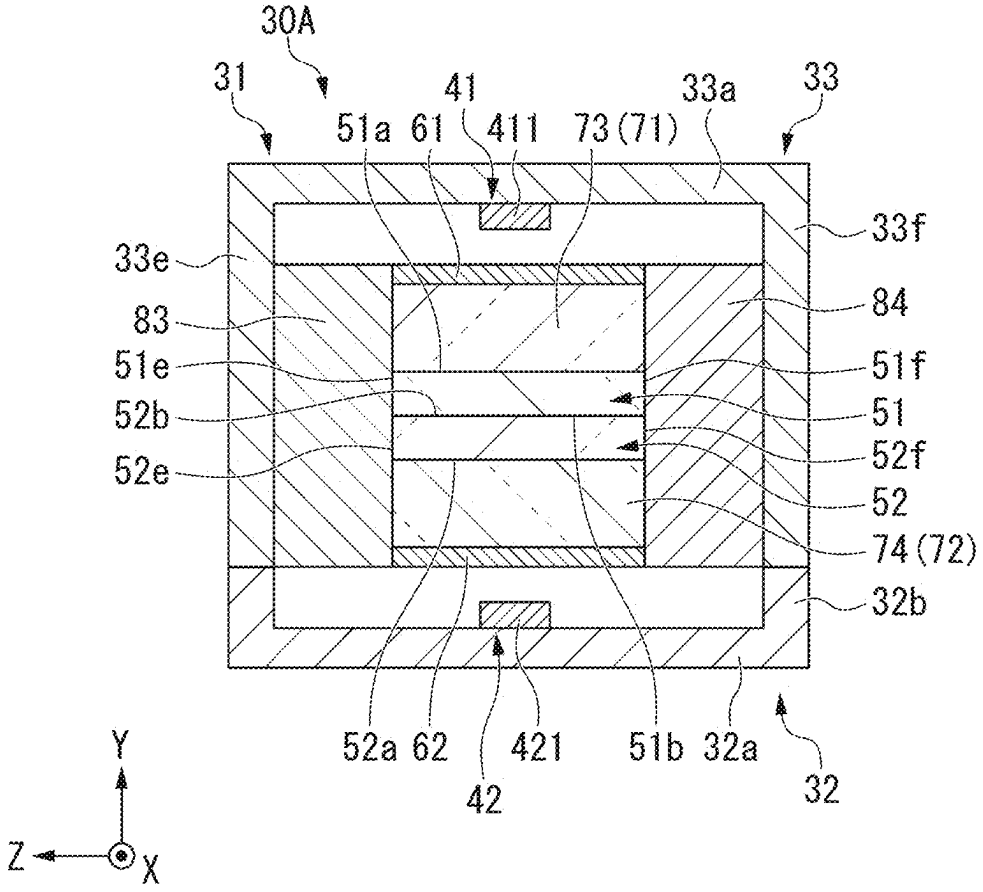
30A
31
41
33a
33
51a
61
411
73(71)
33f
33e
84
83
51e
51f
52b
51
52f
52e
52
74(72)
32b
52a
62
421
51b
32a
32
42
Y
Z
X

FIG. 5

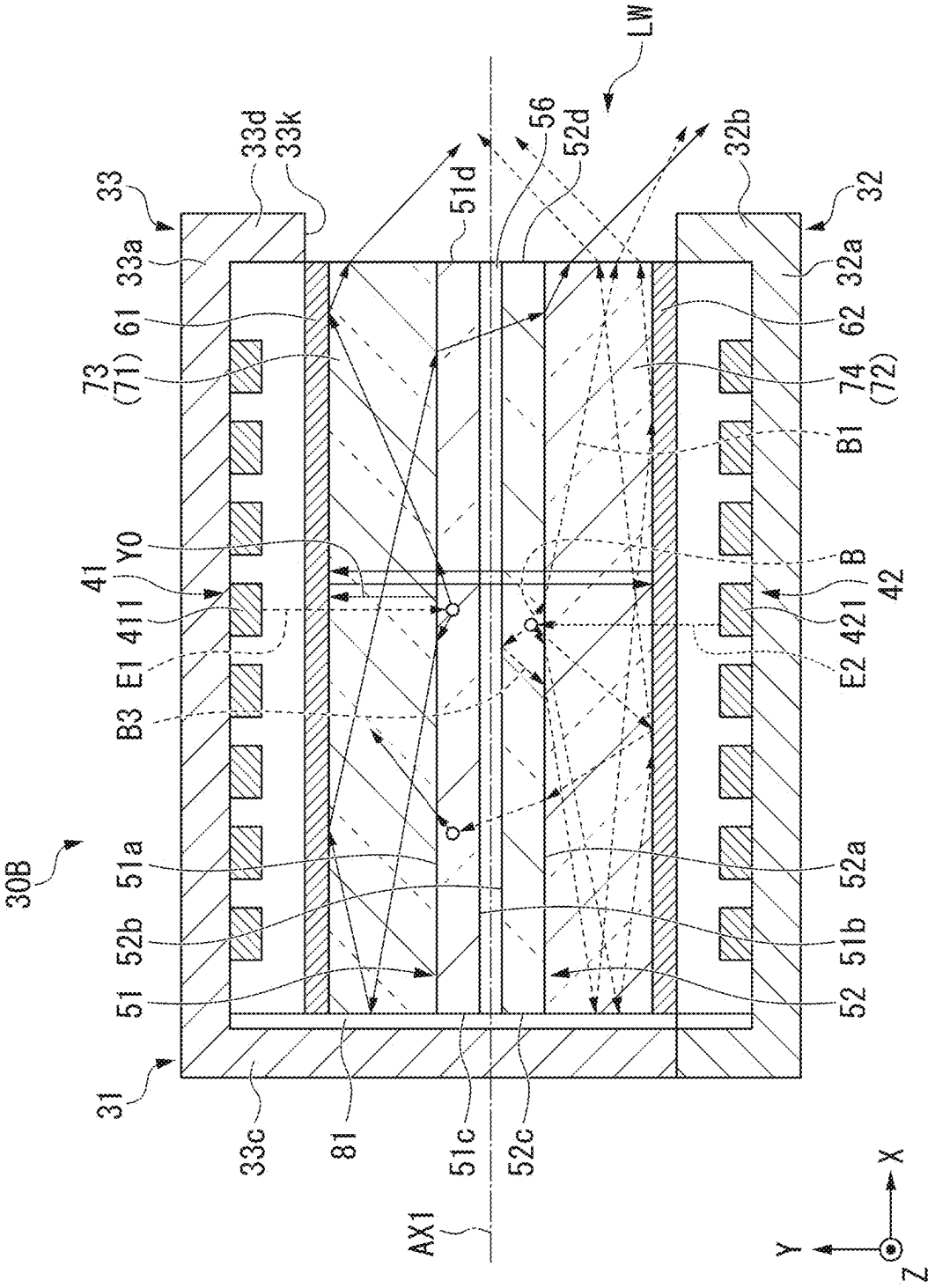
LW
33
33a
33d
33k
51d
56
52d
32b
32
32a
61
62
73
(71)
74
(72)
B1
41
Y0
B
42
411
421
E1
E2
B3
30B
51a
52a
52b
51b
51
52
31
33c
81
51c
52c
AX1
X
Y
Z

FIG. 6

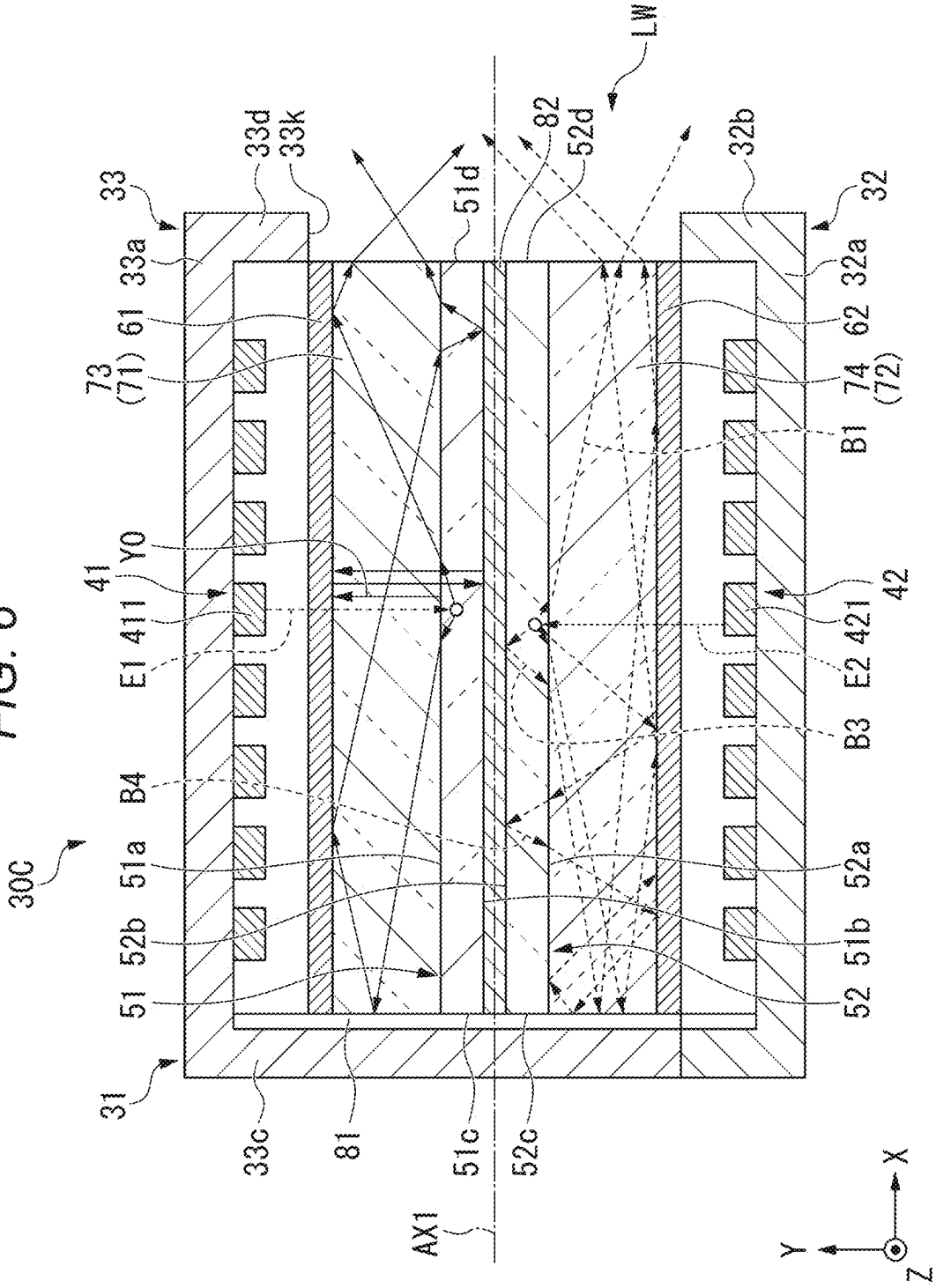
30C
33
33a
61
73
(71)
41
411
E1
Y0
B4
51a
52b
51
31
33c
81
51c
52c
AX1
33d
33k
51d
82
52d
LW
32b
32
32a
62
74
(72)
B1
42
421
E2
B3
52a
51b
52
X
Y
Z

FIG. 7

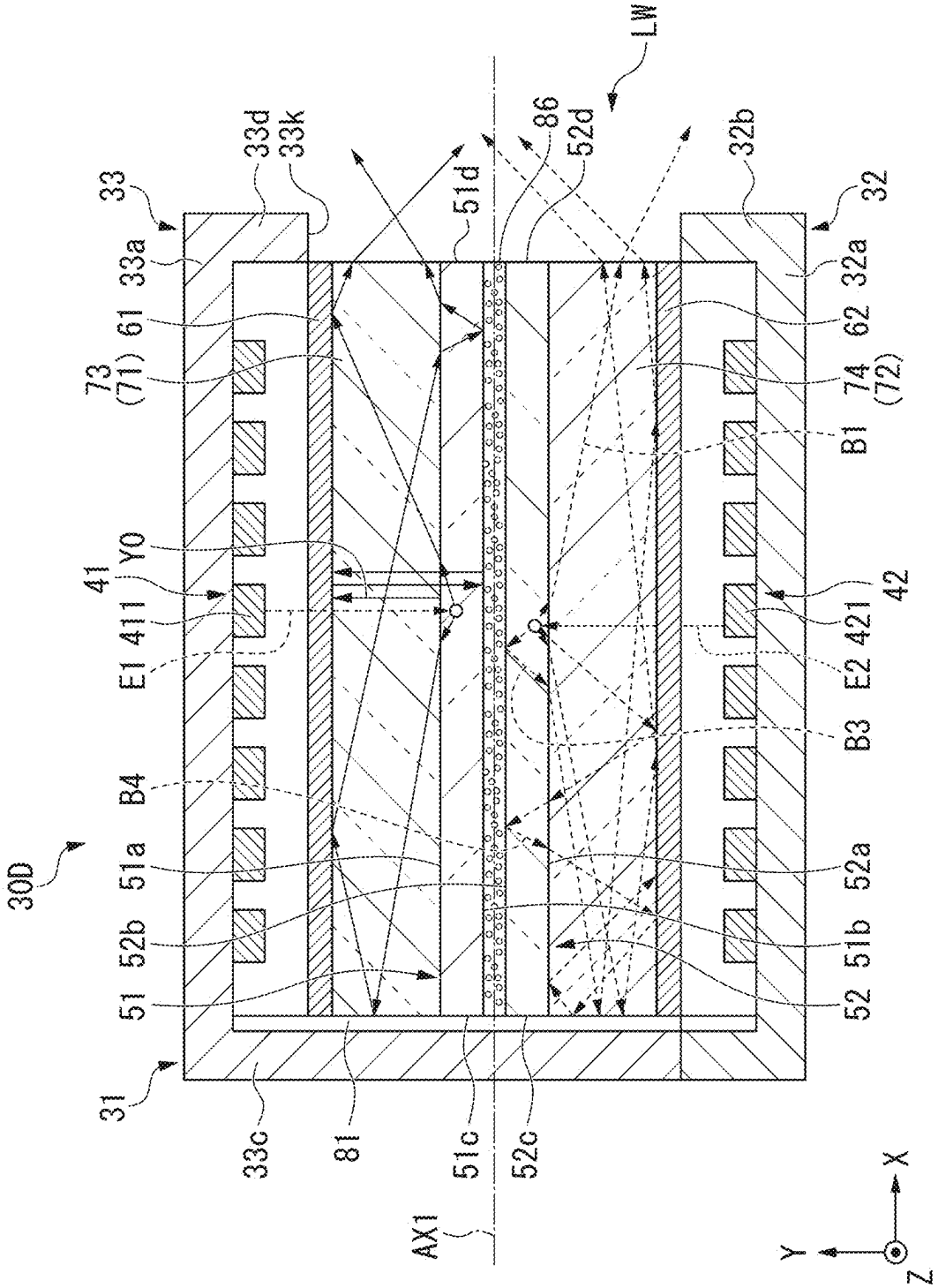
LW
33
33a
33d
33k
51d
86
52d
32b
32
32a
61
62
73
(71)
74
(72)
B1
41
Y0
411
E1
421
E2
42
B3
B4
51a
52a
30D
52b
51b
51
52
31
33c
81
51c
52c
AX1
X
Y
Z

FIG. 8

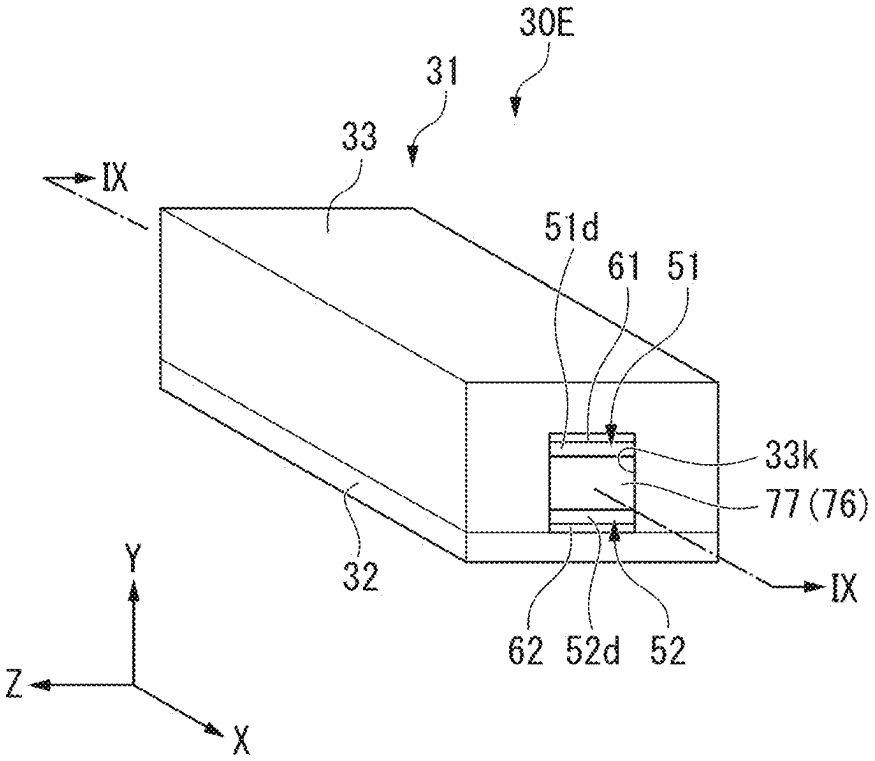

FIG. 9

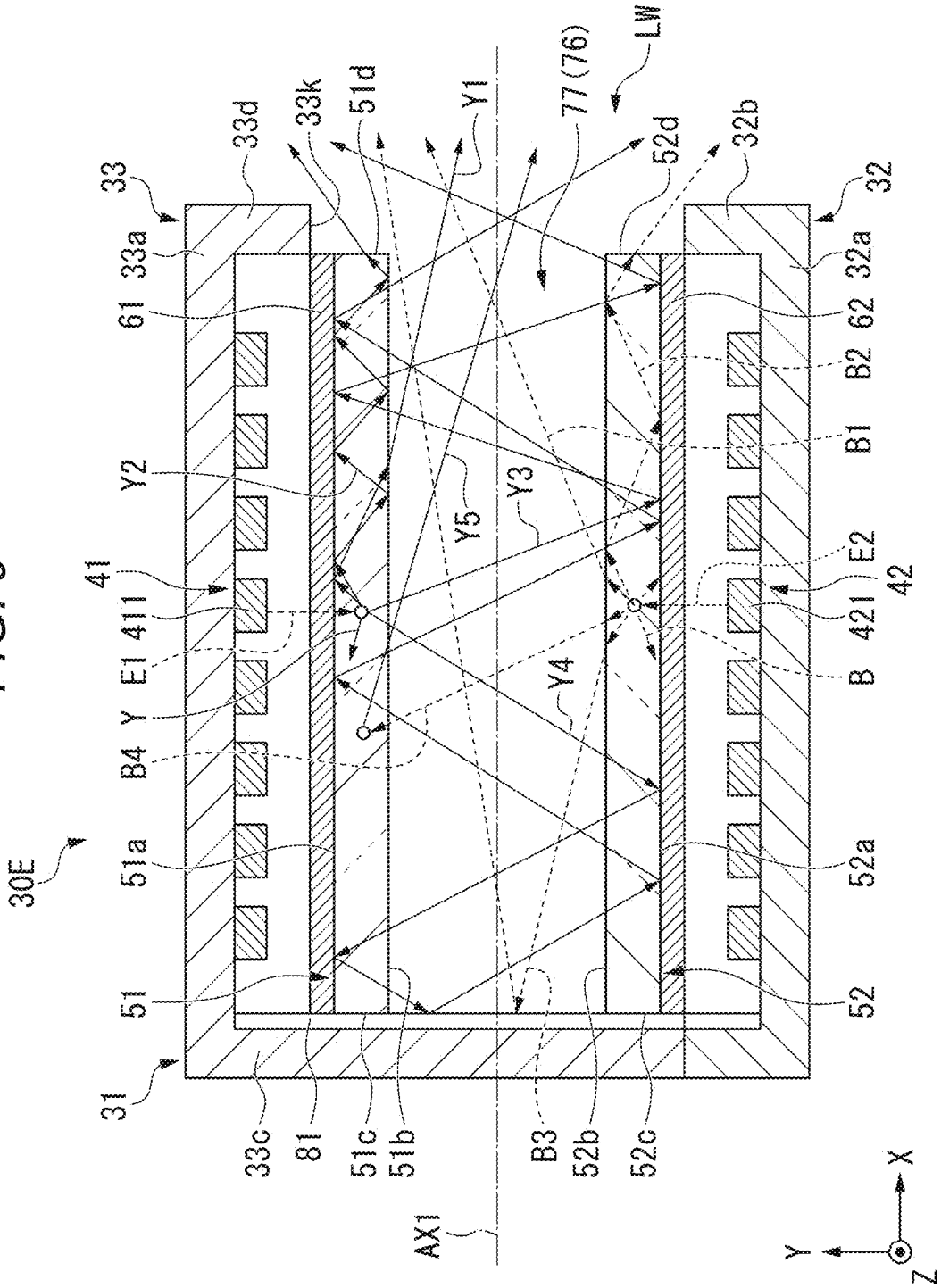
30E
31
33
33a
33c
33d
33k
51
51a
51b
51c
51d
61
81
41
411
E1
Y
B4
Y2
Y1
Y3
Y4
Y5
77 (76)
LW
52
52a
52b
52c
52d
62
32
32a
32b
B1
B2
B3
B
E2
42
421
AX1
X
Y
Z

FIG. 10

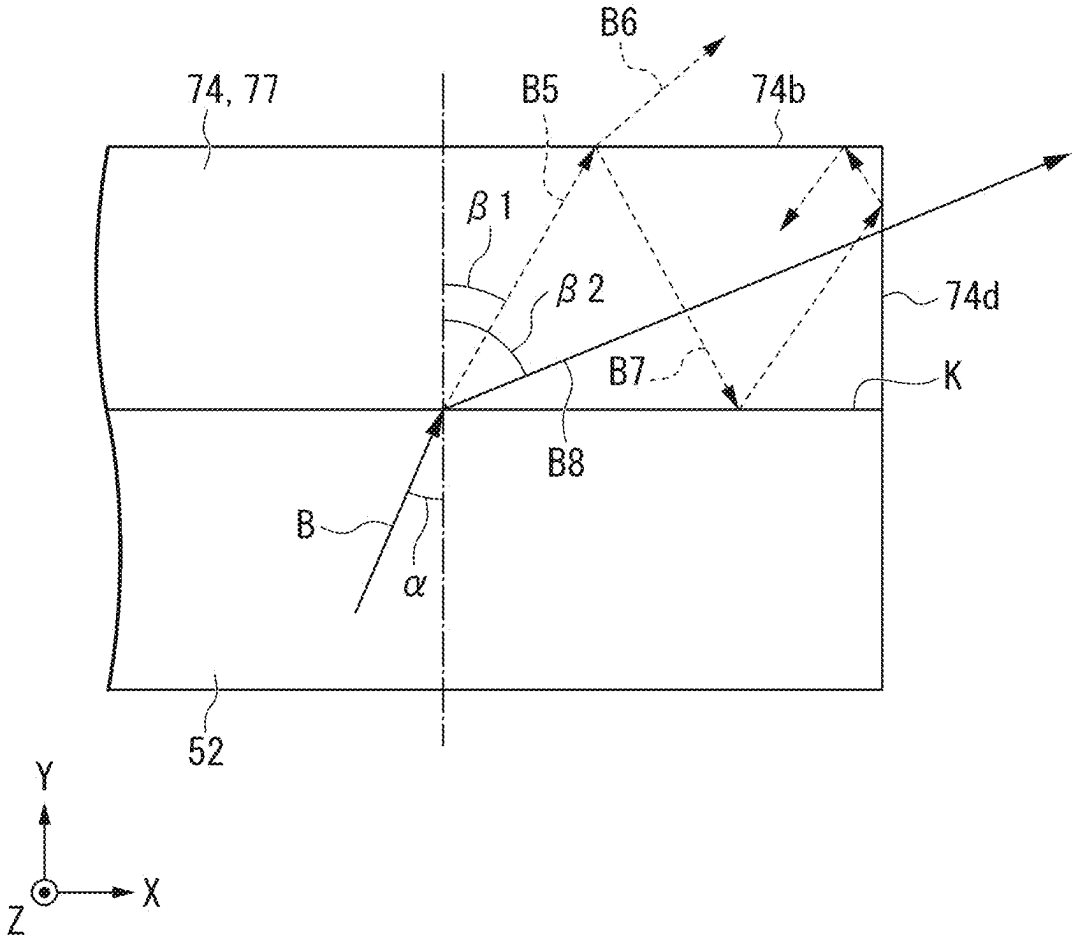

FIG. 11

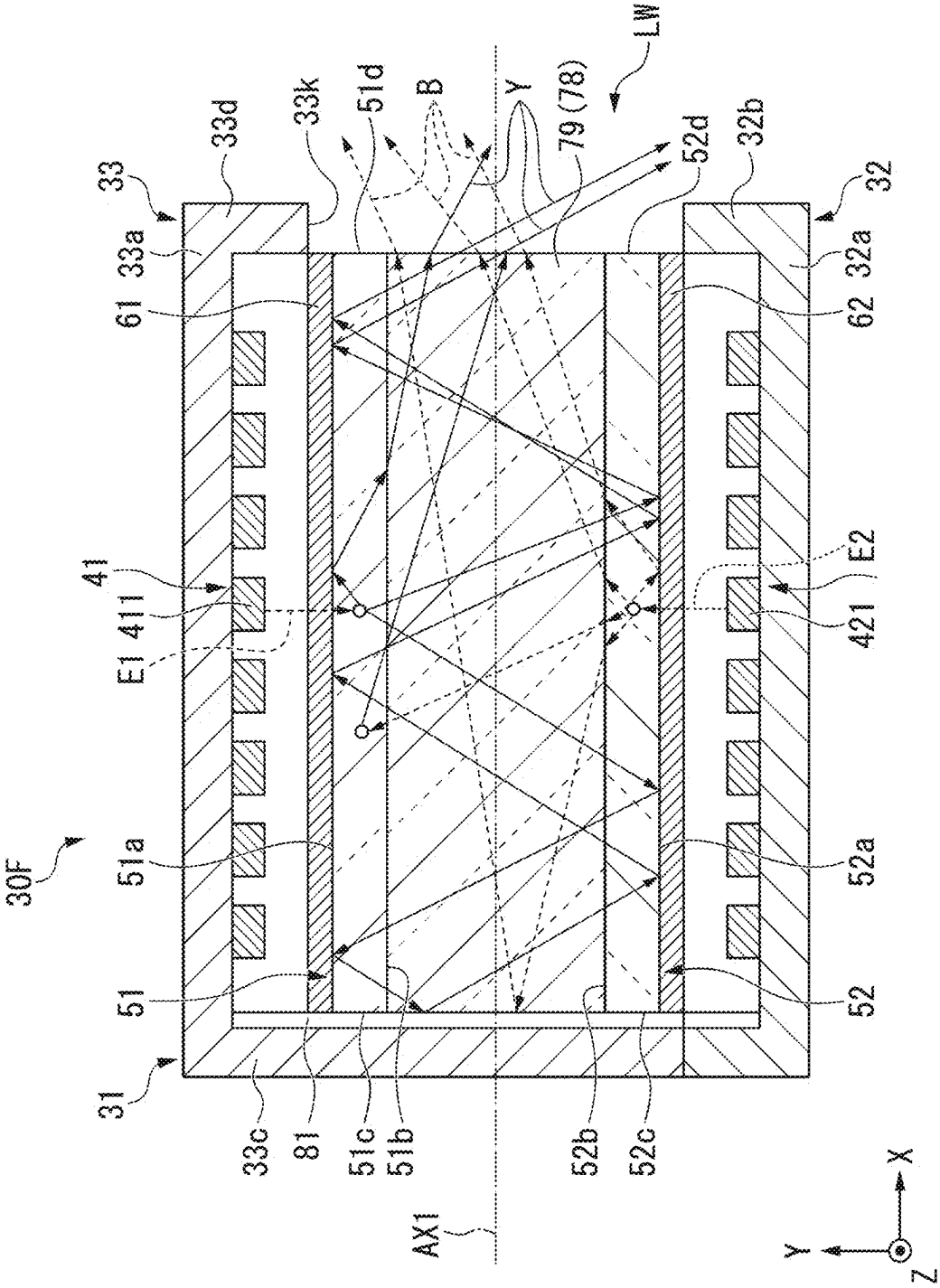
LW
33d
33k
51d
B
Y
79 (78)
52d
32b
33
32
33a
32a
61
62
41
E1
411
E2
421
30F
51a
52a
51
52
31
33c
81
51c
51b
52b
52c
AX1
X
Y
Z

FIG. 12

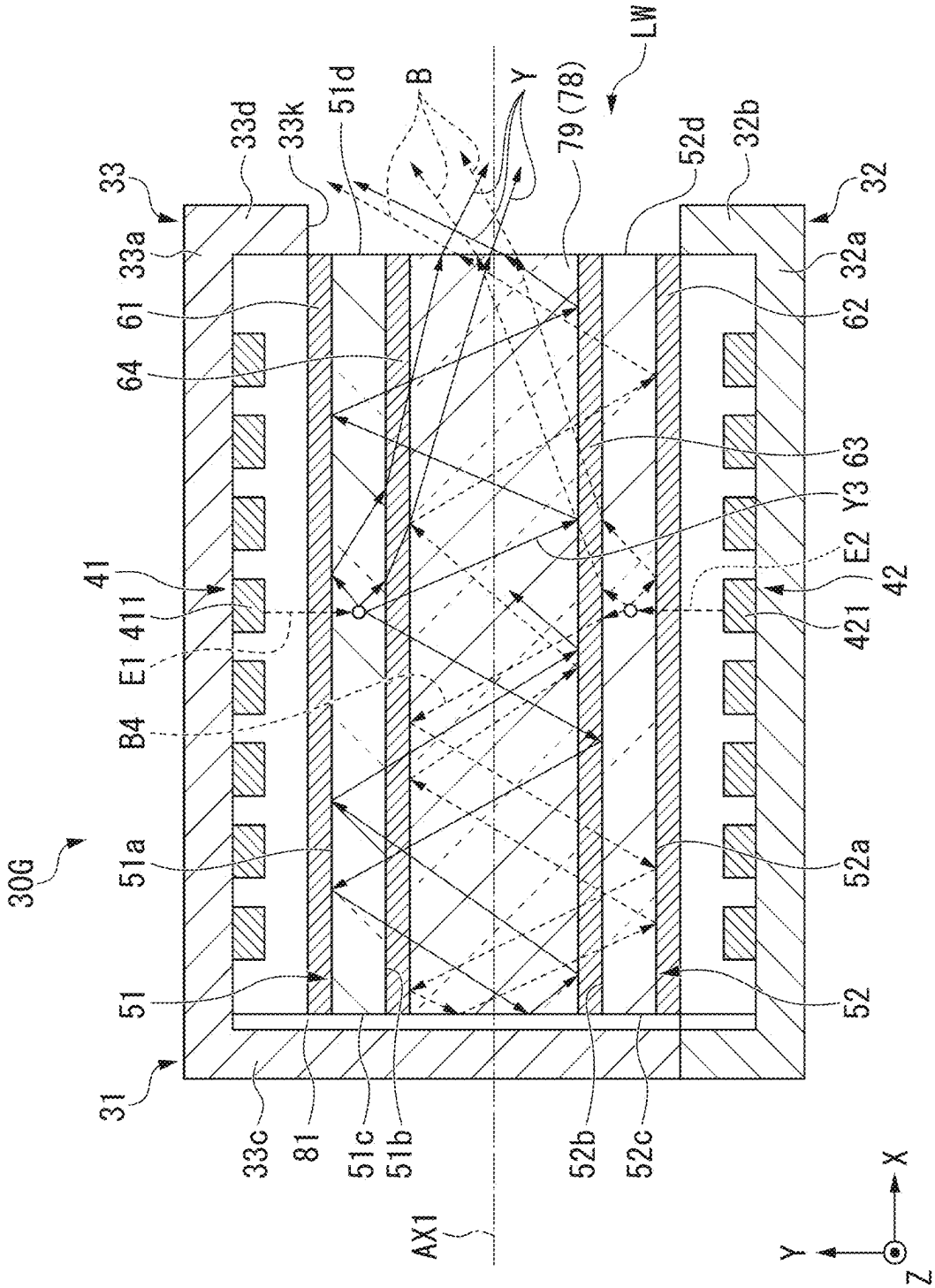
LW
33
33a
33d
33k
51d
B
Y
79 (78)
52d
32b
32
32a
61
62
64
63
Y3
E2
42
41
411
421
E1
B4
30G
51a
52a
51
52
31
33c
81
51c
51b
52b
52c
AX1
X
Y
Z

FIG. 13

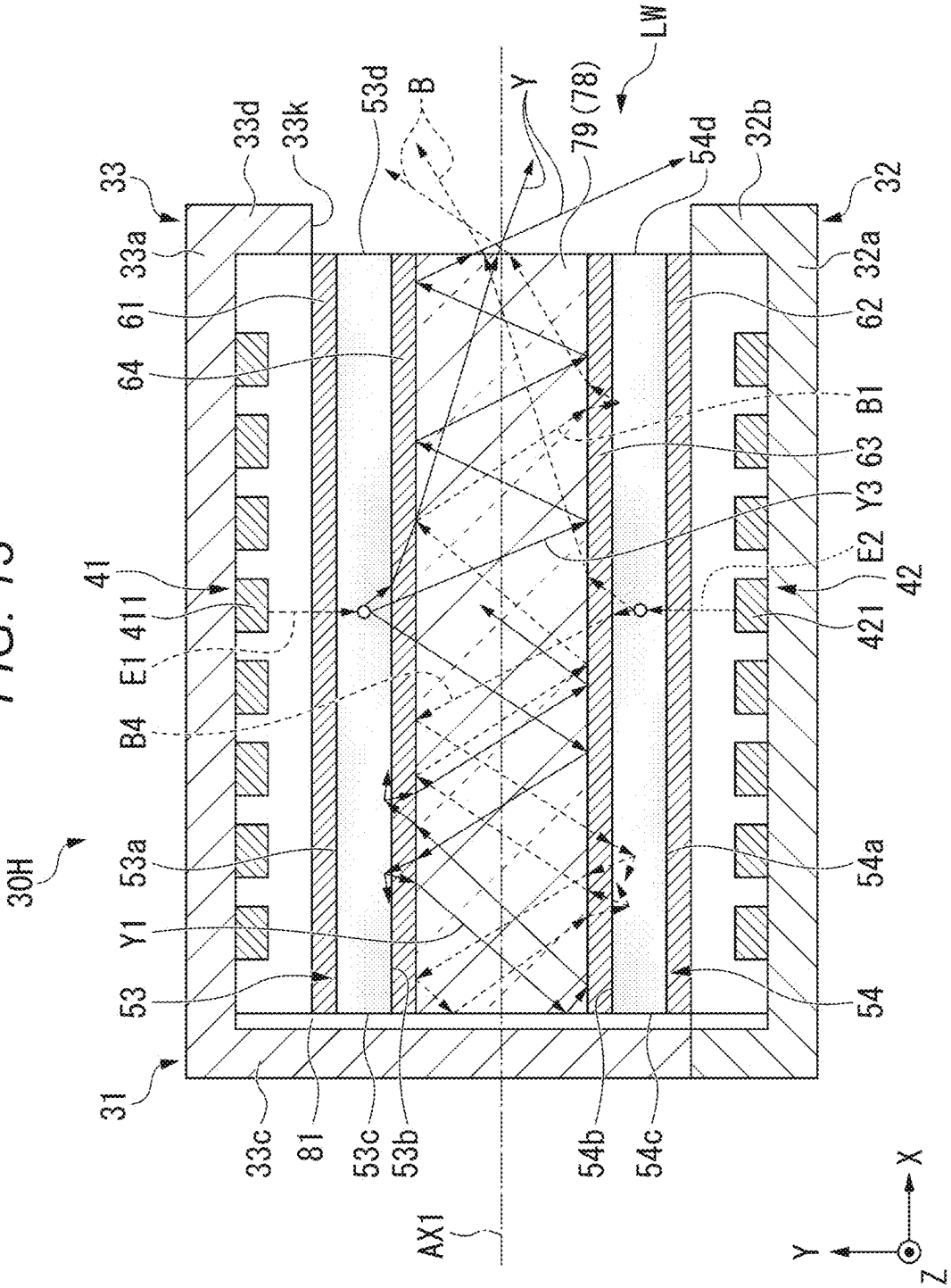
LW
33
33a
33d
33k
53d
B
Y
79 (78)
54d
32b
32
32a
61
62
64
B1
63
Y3
E2
42
41
411
E1
421
B4
30H
53a
54a
Y1
53
54
31
33c
81
53c
53b
54b
54c
AX1
X
Y
Z

LIGHT SOURCE DEVICE AND PROJECTOR

[0001] The present application is based on, and claims priority from JP Application Serial Number 2024-026213, filed Feb. 26, 2024, the disclosure of which is hereby incorporated by reference herein in its entirety.

BACKGROUND

1. Technical Field

[0002] The present disclosure relates to a light source device and a projector.

2. Related Art

[0003] As a light source device used in a projector, there has been proposed a light source device using fluorescence emitted from a phosphor when the phosphor is irradiated with excitation light emitted from a light emitting element. WO 2006/054203 discloses a light source device including a wavelength conversion member that has a flat plate shape and contains a phosphor, and a light emitting diode that emits excitation light. In this light source device, of a plurality of surfaces of the wavelength conversion member, the excitation light is entered from an incident surface having a larger area and fluorescence is emitted from an emission surface having a smaller area.

[0004] WO 2006/054203 is an example of the related art.

[0005] In the light source device of WO 2006/054203, the fluorescence generated inside the wavelength conversion member is totally reflected at an interface between the surface of the wavelength conversion member and an air layer to thereby propagate inside the wavelength conversion member, and is then emitted from the emission surface. However, a component of the fluorescence that enters the interface between the wavelength conversion member and the air layer at an angle smaller than the critical angle is not totally reflected at the interface, and thus leaks to the outside from the interface before reaching the emission surface. Accordingly, there is a problem that the use efficiency of the fluorescence becomes lower.

SUMMARY

[0006] A light source device according to an aspect of the present disclosure includes a first light source emitting a first light in a first wavelength range, a first wavelength conversion element converting the first light into a second light in a second wavelength range different from the first wavelength range, a first optical layer disposed between the first light source and the first wavelength conversion element and transmitting the first light and reflecting the second light, a first light guide portion disposed between the first optical layer and the first wavelength conversion element and guiding the second light converted by the first wavelength conversion element, a second light source emitting a third light in a third wavelength range, a second wavelength conversion element converting the third light into a fourth light in a fourth wavelength range different from the third wavelength range or the second wavelength range, a second optical layer disposed between the second light source and the second wavelength conversion element and transmitting the third light and reflecting the fourth light, a second light guide portion disposed between the second optical layer and the second wavelength conversion element and guiding the fourth light converted by the second wavelength conversion element, and a first reflection member reflecting the first light, the second light, the third light, and the fourth light. The first wavelength conversion element includes a first surface entered by the first light via the first optical layer and the first light guide portion, and a second surface and a third surface crossing the first surface and facing opposite sides to each other. The second wavelength conversion element includes a fourth surface entered by the third light via the second optical layer and the second light guide portion, and a fifth surface and a sixth surface crossing the fourth surface and facing opposite sides to each other. The first reflection member is disposed in a region at the second surface side of the first light guide portion and a region at the fifth surface side of the second light guide portion. The second wavelength conversion element is disposed at a side opposite to the first light source with respect to the first wavelength conversion element. The second light converted by the first wavelength conversion element travels through the first light guide portion and is emitted from a region of the first light guide portion at the third surface side, and the fourth light converted by the second wavelength conversion element travels through the second light guide portion and is emitted from a region of the second light guide portion at the sixth surface side.

[0007] A light source device according another aspect of the present disclosure includes a first light source emitting a first light in a first wavelength range, a first wavelength conversion element converting the first light into a second light in a second wavelength range different from the first wavelength range, a first optical layer disposed between the first light source and the first wavelength conversion element and transmitting the first light and reflecting the second light, a second light source emitting a third light in a third wavelength range, a second wavelength conversion element converting the third light into a fourth light in a fourth wavelength range different from the third wavelength range or the second wavelength range, a second optical layer disposed between the second light source and the second wavelength conversion element and transmitting the third light and reflecting the fourth light, a light guide portion disposed between the first wavelength conversion element and the second wavelength conversion element, and guiding the second light converted by the first wavelength conversion element and guiding the fourth light converted by the second wavelength conversion element, and a first reflection member reflecting the first light, the second light, the third light, and the fourth light. The first wavelength conversion element includes a first surface entered by the first light via the first optical layer and the first light guide portion, and a second surface and a third surface crossing the first surface and facing opposite sides to each other. The second wavelength conversion element includes a fourth surface entered by the third light via the second optical layer and the second light guide portion, and a fifth surface and a sixth surface crossing the fourth surface and facing opposite sides to each other. The second wavelength conversion element is disposed at a side opposite to the first light source with respect to the first wavelength conversion element. The first reflection member is disposed in a region at the second surface side of the light guide portion. The second light converted by the first wavelength conversion element and the fourth light converted by the second wavelength conversion element travel through the light guide portion and are emitted from a region of the light guide portion at the third surface side.

[0008] A projector according to an aspect of the present disclosure includes the light source device according to the aspect of the present disclosure, a light modulation device modulating a light emitted from the light source device, and a projection optical device projecting the light modulated by the light modulation device.

BRIEF DESCRIPTION OF THE DRAWINGS

[0009] FIG. **1** is a schematic configuration diagram of a projector according to a first embodiment.

[0010] FIG. **2** is a perspective view of a light source device according to the first embodiment.

[0011] FIG. **3** is a cross-sectional view of the light source device cut along line III-III in FIG. **2**.

[0012] FIG. **4** is a cross-sectional view of the light source device cut along line IV-IV in FIG. **3**.

[0013] FIG. **5** is a cross-sectional view of a light source device according to a second embodiment.

[0014] FIG. **6** is a cross-sectional view of a light source device according to a third embodiment.

[0015] FIG. **7** is a cross-sectional view of a light source device according to a fourth embodiment.

[0016] FIG. **8** is a perspective view of a light source device according to a fifth embodiment.

[0017] FIG. **9** is a cross-sectional view of the light source device cut along line IX-IX in FIG. **8**.

[0018] FIG. **10** is a schematic diagram showing functions of the light source device of the fifth embodiment.

[0019] FIG. **11** is a cross-sectional view of a light source device according to a sixth embodiment.

[0020] FIG. **12** is a cross-sectional view of a light source device according to a seventh embodiment.

[0021] FIG. **13** is a cross-sectional view of a light source device according to an eighth embodiment.

DESCRIPTION OF EMBODIMENTS

First Embodiment

[0022] As below, a first embodiment of the present disclosure will be described using the drawings.

[0023] A projector according to the embodiment is an example of a projector using liquid crystal panels as light modulation devices.

[0024] In the following drawings, some component elements may be shown at different dimensional scales for clarity of the respective component elements.

[0025] FIG. **1** is a schematic configuration diagram of a projector **10** of the embodiment.

[0026] As shown in FIG. **1**, the projector **10** of the embodiment is a projection-type image display apparatus that displays a color image on a screen SCR as a projection surface. The projector **10** includes three light modulation devices respectively corresponding to color lights of a red light LR, a green light LG, and a blue light LB.

[0027] The projector **10** includes an illumination device **20**, a color separation/light guide system **200**, a red light modulation device **400**R, a green light modulation device **400**G, a blue light modulation device **400**B, a light combining element **500**, and a projection optical device **600**.

[0028] The illumination device **20** includes a light source device **30**A, an optical integration system **90**, a polarization conversion element **93**, and a superimposing system **94**. The illumination device **20** emits a white light LW containing the red light LR, the green light LG, and the blue light LB. A specific configuration of the illumination device **20** will be described later.

[0029] The description with reference to the drawings will hereinafter be made using an X-Y-Z orthogonal coordinate system as necessary. An X-axis is an axis parallel to an optical axis AX**1** of the illumination device **20** and along the front-back direction of the projector **10**. A Y-axis is an axis orthogonal to the X-axis and along the vertical direction of the projector **10**. A Z-axis is an axis orthogonal to the X-axis and the Y-axis, and along the left-right direction of the projector **10**. The coordinate system is for description of the arrangement relationship among the component members of the projector **10**, and does not limit an attitude and a direction of installation of the projector **10**. The optical axis AX**1** of the illumination device **20** is the center axis of the white light LW emitted from the illumination device **20**.

[0030] In the following description, one of the two directions along the X-axis is referred to as "+X direction", and the opposite direction is referred to as "−X direction". One of the two directions along the Y-axis is referred to as "+Y direction", and the opposite direction is referred to as "−Y direction". One of the two directions along the Z-axis is referred to as "+Z direction", and the opposite direction is referred to as "−Z direction". The two directions along the X-axis may be collectively referred to as "X-axis direction" without distinction. The two directions along the Y-axis may be collectively referred to as "Y-axis direction" without distinction. The two directions along the Z-axis may be collectively referred to as "Z-axis direction" without distinction.

[0031] The color separation/light guide system **200** includes a first dichroic mirror **210**, a second dichroic mirror **220**, a first reflection mirror **230**, a second reflection mirror **240**, a third reflection mirror **250**, a first relay lens **260**, and a second relay lens **270**. The color separation/light guide system **200** separates the white light LW emitted from the illumination device **20** into the red light LR, the green light LG, and the blue light LB, guides the red light LR to the red light modulation device **400**R, guides the green light LG to the green light modulation device **400**G, and guides the blue light LB to the blue light modulation device **400**B.

[0032] A field lens **300**R is disposed between the color separation/light guide system **200** and the red light modulation device **400**R. A field lens **300**G is disposed between the color separation/light guide system **200** and the green light modulation device **400**G. A field lens **300**B is disposed between the color separation/light guide system **200** and the blue light modulation device **400**B. The field lens **300**R parallelizes the principal ray of the red light LR to enter the light modulation device **400**R. The field lens **300**G parallelizes the principal ray of the green light LG to enter the light modulation device **400**G. The field lens **300**B parallelizes the principal ray of the blue light LB to enter the light modulation device **400**B.

[0033] The first dichroic mirror **210** transmits the red light LR and reflects the green light LG and the blue light LB. The second dichroic mirror **220** reflects the green light LG and transmits the blue light LB. The first reflection mirror **230** reflects the red light LR. Each of the second reflection mirror **240** and the third reflection mirror **250** reflects the blue light LB.

[0034] Each of the red light modulation device **400**R, the green light modulation device **400**G, and the blue light

modulation device **400**B modulates the color light entered into each light modulation device according to image information to generate an image light. Each of the red light modulation device **400**R, the green light modulation device **400**G, and the blue light modulation device **400**B includes a liquid crystal panel.

[0035] Though not illustrated, light incident-side polarizers are respectively disposed between the field lens **300**R and the red light modulation device **400**R, between the field lens **300**G and the green light modulation device **400**G, and between the field lens **300**B and the blue light modulation device **400**B. Further, light exiting-side polarizers are respectively disposed between the red light modulation device **400**R and the light combining element **500**, between the green light modulation device **400**G and the light combining element **500**, and between the blue light modulation device **400**B and the light combining element **500**. The light incident-side polarizer and the light exiting-side polarizer allow only a linearly-polarized light in a particular direction to pass through.

[0036] The light combining element **500** is incident by the image lights emitted from the light modulation device **400**R, the light modulation device **400**G, and the light modulation device **400**B, combines the image lights corresponding to the red light LR, the green light LG, and the blue light LB, and outputs the combined image light toward the projection optical device **600**. As the light combining element **500**, for example, a cross dichroic prism is used.

[0037] The projection optical device **600** includes a plurality of projection lenses. The projection optical device **600** enlarges and projects the image light combined by the light combining element **500** toward the screen SCR. Thereby, an image is displayed on the screen SCR.

[0038] As below, configurations of the light source device **30**A and the illumination device **20** will be described.

[0039] FIG. **2** is a perspective view of the light source device **30**A of the embodiment. FIG. **3** is a cross-sectional view of the light source device **30**A cut along line III-III in FIG. **2**. FIG. **4** is a cross-sectional view of the light source device **30**A cut along line IV-IV in FIG. **3**.

[0040] As shown in FIGS. **2** to **4**, the light source device **30**A of the embodiment includes a housing **31**, a first light source **41**, a first wavelength conversion element **51**, a first optical layer **61**, a first light guide portion **71**, a second light source **42**, a second wavelength conversion element **52**, a second optical layer **62**, a second light guide portion **72**, a first reflection member **81**, a third reflection member **83**, and a fourth reflection member **84**.

[0041] The housing **31** forms an exterior of the light source device **30**A. The housing **31** houses the first light source **41**, the first optical layer **61**, the first light guide portion **71**, the first wavelength conversion element **51**, the second light source **42**, the second optical layer **62**, the second light guide portion **72**, the second wavelength conversion element **52**, the first reflection member **81**, the third reflection member **83**, and the fourth reflection member **84**. The housing **31** includes a bottom plate **32** and a lid **33**. The bottom plate **32** has substantially a plate shape. The lid **33** has a box shape with one face opened, and includes a top wall portion **33***a*, a first side wall portion **33***c*, a second side wall portion **33***d*, a third side wall portion **33***e*, a fourth side wall portion **33***f*, and an extraction opening **33***k*.

[0042] The bottom plate **32** is disposed along the XZ-plane and supports the second light source **42**. The bottom plate **32** includes a base portion **32***a* and a frame portion **32***b*. The base portion **32***a* is a plate-like member forming the main body of the bottom plate **32** and extends to be longer in the X-axis direction. The frame portion **32***b* is formed integrally with the base portion **32***a*, and is provided on a surface located at the +Y side of the base portion **32***a*. The bottom plate **32** has a recessed portion for holding the second light source **42**.

[0043] The bottom plate **32** is coupled to transfer heat to the second light source **42**. Accordingly, the bottom plate **32** is desirably formed using a material having a predetermined strength and higher thermal conductivity. As the material of the bottom plate **32**, it is desirable to use, for example, a metal such as aluminum or stainless steel, and particularly, 6061 aluminum alloy.

[0044] In the lid **33**, the top wall portion **33***a* is disposed along the XZ-plane. The first side wall portion **33***c* and the second side wall portion **33***d* cross the X-axis along the longitudinal direction of the light source device **30**A and are located at opposite sides to each other in the X-axis direction. The first side wall portion **33***c* is located at the −X side as one side in the X-axis direction. The second side wall portion **33***d* is located at the +X side as the other side in the X-axis direction. The third side wall portion **33***e* and the fourth side wall portion **33***f* are located at opposite sides to each other in the Z-axis direction crossing the longitudinal direction of the light source device **30**A. In the embodiment, the third side wall portion **33***e* is located at the +Z side as one side in the Z-axis direction. The fourth side wall portion **33***f* is located at the −Z side as the other side in the Z-axis direction.

[0045] The lid **33** holds the first light source **41**, the first optical layer **61**, the first light guide portion **71**, the first wavelength conversion element **51**, the second optical layer **62**, the second light guide portion **72**, the second wavelength conversion element **52**, the first reflection member **81**, the third reflection member **83**, and the fourth reflection member **84**. The top wall portion **33***a* is coupled to transfer heat to the first light source **41**. The third side wall portion **33***e* and the fourth side wall portion **33***f* are coupled to transfer heat to the first wavelength conversion element **51** and the second wavelength conversion element **52** via the third reflection member **83** and the fourth reflection member **84**. Accordingly, like the bottom plate **32**, the lid **33** is desirably formed using a material having a predetermined strength and higher thermal conductivity. As the material of the lid **33**, like the bottom plate, it is desirable to use, for example, a metal such as aluminum or stainless steel, and particularly, 6061 aluminum alloy.

[0046] According to the configuration, since the heat of the first wavelength conversion element **51** and the second wavelength conversion element **52** is released to the outside through the lid **33**, the temperature rise of the first wavelength conversion element **51** and the second wavelength conversion element **52** can be suppressed. As a result, a decrease in wavelength conversion efficiency due to the temperature rise of the first wavelength conversion element **51** and the second wavelength conversion element **52** can be suppressed.

[0047] As shown in FIG. **3**, the first reflection member **81** is disposed on the first side wall portion **33***c* of the lid **33**. As shown in FIG. **4**, the third reflection member **83** is disposed on the third side wall portion **33***e* of the lid **33**. The fourth reflection member **84** is disposed on the fourth side wall

portion **33***f* of the lid **33**. The extraction opening **33***k* is provided in the second side wall portion **33***d* of the lid **33**. The extraction opening **33***k* is an opening for extracting yellow fluorescence Y emitted from the first light guide portion **71** and the first wavelength conversion element **51** and blue fluorescence B emitted from the second light guide portion **72** and the second wavelength conversion element **52** to the outside.

[0048] The lid **33** is placed in contact with the base portion **32***a* of the bottom plate **32**. The lid **33** and the bottom plate **32** are fixed to each other via a fixing member such as an adhesive or a screw (not shown). As described above, in the light source device **30**A, the respective component elements of the first light source **41**, the first optical layer **61**, the first light guide portion **71**, the first wavelength conversion element **51**, the second light source **42**, the second optical layer **62**, the second light guide portion **72**, the second wavelength conversion element **52**, the first reflection member **81**, the third reflection member **83**, and the fourth reflection member **84** are held in a space surrounded by the housing **31**. Thereby, adhesion of foreign matter such as dust to the above described component elements can be suppressed.

[0049] The first light source **41** includes a plurality of first light emitting elements **411**. The plurality of first light emitting elements **411** are respectively mounted on the top wall portion **33***a* of the housing **31**. The number of the first light emitting elements **411** provided in the first light source is not particularly limited. The first light emitting element **411** emits a first excitation beam in a first wavelength range. The first light emitting element **411** includes, for example, a light emitting diode (LED). The first light emitting element **411** is disposed to face the first wavelength conversion element **51**, and emits the first excitation beam toward the first wavelength conversion element **51**. The first wavelength range is, for example, a violet-to-blue wavelength range from 400 nm to 480 nm and has a center wavelength of, for example, 455 nm. The plurality of first light emitting elements **411** are arranged along the X-axis direction as the longitudinal direction of the first wavelength conversion element **51**. As described above, the first light source **41** emits a first excitation light E**1** in the first wavelength range including a plurality of blue first excitation beams toward the first wavelength conversion element **51**. The first excitation light E**1** in the embodiment corresponds to a first light in Claims.

[0050] The first wavelength conversion element **51** has a columnar shape extending along the X-axis and has six surfaces. The sides of the first wavelength conversion element **51** extending along the X-axis are longer than the sides extending along the Y-axis and the sides extending along the Z-axis. The X-axis direction corresponds to the longitudinal direction of the first wavelength conversion element **51**. The Y-axis direction is a direction parallel to the shortest side of the sides of the first wavelength conversion element **51**. The lengths of the sides along the Y-axis are shorter than the lengths of the sides along the Z-axis. That is, the cross-sectional shape of the first wavelength conversion element **51** cut along a plane along the YZ-plane is a rectangular shape as shown in FIG. **4**.

[0051] The first wavelength conversion element **51** includes a front surface **51***a* and a back surface **51***b*, a first end surface **51***c* and a second end surface **51***d*, and a first side surface **51***e* and a second side surface **51***f*. The front surface **51***a* and the back surface **51***b* cross the Y-axis and face opposite sides to each other in the Y-axis. In the embodiment, the front surface **51***a* is a surface located at the +Y side as one side in the Y-axis direction. The back surface **51***b* is a surface located at the −Y side as the other side in the Y-axis direction. The first excitation light E**1** enters the front surface **51***a* from the first light source **41** disposed on the top wall portion **33***a* via the first optical layer **61** and the first light guide portion **71**. The front surface **51***a* of the embodiment corresponds to a first surface in Claims.

[0052] As shown in FIG. **3**, the first end surface **51***c* and the second end surface **51***d* cross the front surface **51***a* and the back surface **51***b*, and face opposite sides to each other in the X-axis direction along the longitudinal direction of the first wavelength conversion element **51**. In the embodiment, the first end surface **51***c* is located at the −X side as one side in the X-axis direction. The second end surface **51***d* is located at the +X side as the other side in the X-axis direction. The first end surface **51***c* of the embodiment corresponds to a second surface in Claims. The second end surface **51***d* of the embodiment corresponds to a third surface in Claims.

[0053] As shown in FIG. **4**, the first side surface **51***e* and the second side surface **51***f* cross the front surface **51***a* and the back surface **51***b* and the first end surface **51***c* and the second end surface **51***d*, and face opposite sides to each other in the Z-axis direction. In the embodiment, the first side surface **51***e* is located at the +Z side as one side in the Z-axis direction, and the second side surface **51***f* is located at the −Z side as the other side in the Z-axis direction. The first side surface **51***e* of the embodiment corresponds to a seventh surface in Claims. The second side surface **51***f* of the embodiment corresponds to an eighth surface in Claims.

[0054] The first wavelength conversion element **51** contains at least yellow phosphor, and converts the first excitation light E**1** in the first wavelength range emitted from the first light source **41** into yellow fluorescence Y in a second wavelength range different from the first wavelength range. As will be described in detail later, part of the yellow fluorescence Y generated inside the first wavelength conversion element **51** is emitted from the front surface **51***a* to the first light guide portion **71**.

[0055] The first wavelength conversion element **51** contains ceramic phosphor including polycrystalline phosphor for wavelength-conversion of the first excitation light E**1** into yellow fluorescence Y. The first wavelength conversion element **51** of the embodiment is formed using phosphor without a light scattering property, the so-called transparent phosphor. The second wavelength range of the yellow fluorescence Y is a yellow wavelength range, for example, from 490 to 750 nm. The center wavelength of the second wavelength range is, for example, 550 nm. That is, the fluorescence Y is yellow fluorescence containing a red light component and a green light component. The yellow fluorescence Y of the embodiment corresponds to a second light in Claims.

[0056] The first wavelength conversion element **51** may include single crystal phosphor instead of the polycrystalline phosphor. Or, the first wavelength conversion element **51** may include fluorescent glass. Or, the first wavelength conversion element **51** may be formed using a material obtained by dispersion of a large number of phosphor particles in a binder of glass or resin. The first wavelength

conversion element **51** formed using the material converts the first excitation light E**1** into yellow fluorescence Y.

[0057] Specifically, the material of the first wavelength conversion element **51** includes, for example, yttrium aluminum garnet (YAG)-based phosphor. YAG:Ce containing cerium (Ce) as an activator is taken as an example. As the material of the first wavelength conversion element **51**, a material obtained by mixing and solid-phase reaction of raw powder containing constituent elements such as Y_2O_3, Al_2O_3, CeO_3, Y—Al—O amorphous particles obtained by a wet process such as a coprecipitation process or a sol-gel process, YAG particles obtained by a gas-phase process such as a spray-drying process, a flame pyrolysis process, or a thermal plasma process, or the like is used.

[0058] The first optical layer **61** is disposed between the first light source **41** and the first wavelength conversion element **51**. The first optical layer **61** has an optical property of transmitting the first excitation light E**1** and reflecting yellow fluorescence Y. The first optical layer **61** includes, for example, a dielectric multilayer film. The first optical layer **61** is disposed on a surface of the first light-transmissive member **73**, which will be described later, facing the first light source **41**.

[0059] The first light guide portion **71** is disposed between the first optical layer **61** and the first wavelength conversion element **51**. The first light guide portion **71** guides the yellow fluorescence Y converted by the first wavelength conversion element **51**. In the embodiment, the first light-transmissive member **73** that transmits the first excitation light E**1** and the yellow fluorescence Y is disposed in the first light guide portion **71**. The first light-transmissive member **73** is bonded to the front surface **51***a* of the first wavelength conversion element **51** by an optical adhesive.

[0060] The first light-transmissive member **73** is formed using a light-transmissive material including, for example, borosilicate glass such as BK7, quartz, synthetic quartz, quartz crystal, SiC, GaN, MgO, YAG, sapphire, and diamond. As described above, it is necessary to form the first light-transmissive member **73** using a material that can transmit the first excitation light E**1** and the yellow fluorescence Y. The first light-transmissive member **73** has a plate shape extending along the X-axis. As shown in FIG. **4**, the cross-sectional shape of the first light-transmissive member **73** cut along a plane along the YZ-plane is a rectangular shape extending to be longer in the X-axis direction.

[0061] It is desirable that the thermal conductivity of the first light-transmissive member **73** is higher than the thermal conductivity of the first wavelength conversion element **51**. The material of the first light-transmissive member **73** that satisfies the relationship includes, for example, SiC, GaN, YAG, MgO, sapphire, and diamond. According to the configuration, since the heat of the first wavelength conversion element **51** is efficiently transferred to the first light-transmissive member **73**, the temperature rise of the first wavelength conversion element **51** can be suppressed. Thereby, a decrease in conversion efficiency due to the temperature rise of the first wavelength conversion element **51** can be suppressed.

[0062] As shown in FIG. **3**, the second light source **42** includes a plurality of second light emitting elements **421**. The plurality of second light emitting elements **421** are respectively mounted on the bottom plate **32** of the housing **31**. Note that the number of the second light emitting elements **421** is not particularly limited. The second light emitting element **421** emits a second excitation beam in a third wavelength range. The second light emitting element **421** includes, for example, an LED. The second light emitting element **421** is disposed to face the second wavelength conversion element **52**, and emits the second excitation beam toward the second wavelength conversion element **52**. The third wavelength range is, for example, an ultraviolet wavelength range, and the center wavelength is, for example, 380 nm. The plurality of second light emitting elements **421** are arranged along the X-axis direction as the longitudinal direction of the second wavelength conversion element **52**. As described above, the second light source **42** emits a second excitation light E**2** in the third wavelength range including a plurality of ultraviolet second excitation beams toward the second wavelength conversion element **52**. The second excitation light E**2** of the embodiment corresponds to a third light in Claims.

[0063] The second wavelength conversion element **52** is disposed at the −Y side of the first wavelength conversion element **51**. That is, the second wavelength conversion element **52** is disposed at the side opposite to the first light source **41** with respect to the first wavelength conversion element **51**. In the embodiment, the back surface **51***b* of the first wavelength conversion element **51** and the back surface **52***b* of the second wavelength conversion element **52** are bonded to each other via a bonding material (not shown) such as an optical adhesive. According to the configuration, the first wavelength conversion element **51** and the second wavelength conversion element **52** can be handled as an integrated member, and thereby, the manufacturing process of the light source device can be made easier. Further, since the first wavelength conversion element **51** and the second wavelength conversion element **52** are arranged side by side in the direction (Y-axis direction) orthogonal to the longitudinal direction (X-axis direction) of the respective wavelength conversion elements **51** and **52**, the length in the X-axis direction is not so long, and the small light source device **30**A can be realized.

[0064] The second wavelength conversion element **52** has a columnar shape extending along the X-axis and has six surfaces. The sides of the second wavelength conversion element **52** extending along the X-axis are longer than the sides extending along the Y-axis and the sides extending along the Z-axis. The X-axis direction corresponds to the longitudinal direction of the second wavelength conversion element **52**. The Y-axis direction is a direction parallel to the shortest side of the sides of the second wavelength conversion element **52**. The lengths of the sides along the Y-axis are shorter than the lengths of the sides along the Z-axis. That is, the cross-sectional shape of the second wavelength conversion element **52** cut along a plane along the YZ-plane is a rectangular shape as shown in FIG. **4**.

[0065] The second wavelength conversion element **52** has a front surface **52***a* and a back surface **52***b*, a first end surface **52***c* and a second end surface **52***d*, and a first side surface **52***e* and a second side surface **52***f*. The front surface **52***a* and the back surface **52***b* cross the Y-axis and face opposite sides to each other in the Y-axis. In the embodiment, the front surface **52***a* is a surface located at the −Y side as one side in the Y-axis direction. The back surface **52***b* is a surface located at the +Y side as the other side in the Y-axis direction. The second excitation light E**2** enters the front surface **52***a* from the second light source **42** disposed on the bottom plate **32** via the second optical layer **62** and the

second light guide portion **72**. The front surface **52***a* of the embodiment corresponds to a fourth surface in Claims.

[0066] As shown in FIG. **3**, the first end surface **52***c* and the second end surface **52***d* cross the front surface **52***a* and the back surface **52***b*, and face opposite sides to each other in the X-axis direction along the longitudinal direction of the second wavelength conversion element **52**. In the embodiment, the first end surface **52***c* is located at the −X side as one side in the X-axis direction. The second end surface **52***d* is located at the +X side as the other side in the X-axis direction. The first end surface **52***c* of the embodiment corresponds to a fifth surface in Claims. The second end surface **52***d* of the embodiment corresponds to a sixth surface in Claims.

[0067] As shown in FIG. **4**, the first side surface **52***e* and the second side surface **52***f* cross the front surface **52***a* and the back surface **52***b* and the first end surface **52***c* and the second end surface **52***d*, and face opposite sides to each other in the Z-axis direction. In the embodiment, the first side surface **52***e* is located at the +Z side as one side in the Z-axis direction, and the second side surface **52***f* is located at the −Z side as the other side in the Z-axis direction. The first side surface **52***e* of the embodiment corresponds to a ninth surface in Claims. The second side surface **52***f* of the embodiment corresponds to a tenth surface in Claims.

[0068] The second wavelength conversion element **52** contains at least blue phosphor, and converts the second excitation light E**2** in the third wavelength range emitted from the plurality of second light emitting elements **421** of the second light source **42** into blue fluorescence B in a fourth wavelength range different from the third wavelength range or the second wavelength range. As will be described in detail later, part of the blue fluorescence B generated inside the second wavelength conversion element **52** is emitted from the front surface **52***a* to the second light guide portion **72**.

[0069] The second wavelength conversion element **52** includes phosphor for wavelength-conversion of the second excitation light E**2** into blue fluorescence B. The phosphor includes $(Sr, Ba)_{10}(PO_4)_6Cl_2:Eu^{2+}$ (SBCA) as an example. The second wavelength conversion element **52** of the embodiment is formed using phosphor without a light scattering property, the so-called transparent phosphor. The fourth wavelength range of the blue fluorescence B is, for example, a blue wavelength range from 430 to 490 nm. The center wavelength of the fourth wavelength range is, for example, 460 nm. As the material of the second wavelength conversion element **52**, $BaMgAl_{10}O_{17}$:Eu(II) or the like may be used. The blue fluorescence B of the embodiment corresponds to a fourth light in Claims.

[0070] The second optical layer **62** is disposed between the second light source **42** and the second wavelength conversion element **52**. The second optical layer **62** has an optical property of transmitting the second excitation light E**2** and reflecting the blue fluorescence B. The second optical layer **62** includes, for example, a dielectric multilayer film. The second optical layer **62** is disposed on a surface of a second light-transmissive member **74**, which will be described later, facing the second light source **42**. The second optical layer **62** reflects lights having wavelengths equal to or longer than those in the fourth wavelength range, and not only reflects the blue fluorescence B but also the yellow fluorescence Y generated in the first wavelength conversion element **51**.

[0071] The second light guide portion **72** is disposed between the second optical layer **62** and the second wavelength conversion element **52**. The second light guide portion **72** guides the blue fluorescence B converted by the second wavelength conversion element **52**. In the embodiment, the second light-transmissive member **74** that transmits the second excitation light E**2** and the blue fluorescence B is disposed in the second light guide portion **72**. The second light-transmissive member **74** is bonded to the front surface **52***a* of the second wavelength conversion element **52** by an optical adhesive.

[0072] The second light-transmissive member **74** is formed using a light-transmissive material including, for example, borosilicate glass such as BK7, quartz, synthetic quartz, quartz crystal, SiC, GaN, MgO, YAG, sapphire, and diamond. As described above, it is necessary to form the second light-transmissive member **74** using a material that can transmit the second excitation light E**2** and the blue fluorescence B. The second light-transmissive member **74** has a plate shape extending along the X-axis. As shown in FIG. **4**, the cross-sectional shape of the second light-transmissive member **74** cut along a plane along the YZ-plane is a rectangular shape extending to be longer in the X-axis direction. The constituent material of the second light-transmissive member **74** may be the same as or different from the constituent material of the first light-transmissive member **73**.

[0073] It is desirable that the thermal conductivity of the second light-transmissive member **74** is higher than the thermal conductivity of the second wavelength conversion element **52**. The material of the second light-transmissive member **74** that satisfies the relationship includes SiC, GaN, MgO, YAG, sapphire, and diamond. According to the configuration, since the heat of the second wavelength element **52** is efficiently transferred to the second light-transmissive member **74**, the temperature rise of the second wavelength conversion element **52** can be suppressed. Thereby, a decrease in conversion efficiency due to the temperature rise of the second wavelength conversion element **52** can be suppressed.

[0074] As shown in FIG. **3**, the first reflection member **81** is disposed at the −X side of the first light source **41**, the first optical layer **61**, the first light guide portion **71**, the first wavelength conversion element **51**, the second wavelength conversion element **52**, the second light guide portion **72**, the second optical layer **62**, and the second light source **42**. The first reflection member **81** is disposed on the first side wall portion **33***c* of the housing **31**. The first reflection member **81** is not necessarily provided all over the above described regions, but may be provided at least in the region at the first end surface **51***c* side of the first light guide portion **71** and the region at the first end surface **52***c* side of the second light guide portion **72**.

[0075] The first reflection member **81** reflects the yellow fluorescence Y propagating inside the first light guide portion **71** and the first wavelength conversion element **51** and reaching the first reflection member **81** and the blue fluorescence B propagating inside the second light guide portion **72** and the second wavelength conversion element **52** and reaching the first reflection member **81**. Further, the first reflection member **81** reflects the first excitation light E**1** propagating through the first wavelength conversion element **51** or the first light guide portion **71** and reaching the first reflection member **81** and the second excitation light E**2**

propagating through the second wavelength conversion element **52** or the second light guide portion **72** and reaching the first reflection member **81**. That is, the first reflection member **81** reflects the yellow fluorescence Y, the blue fluorescence B, the first excitation light E**1**, and the second excitation light E**2**. The first reflection member **81** includes, for example, a metal film, a dielectric multilayer film, and a scattering member containing barium sulfate.

[0076] As shown in FIG. **4**, the third reflection member **83** is disposed on the third side wall portion **33***e* of the housing **31** to face the first side surface **51***e* of the first wavelength conversion element **51**, the region of the first light guide portion **71** at the first side surface **5***l* side, the first side surface **52***e* of the second wavelength conversion element **52**, and the region of the second light guide portion **72** at the first side surface **52***e* side. The fourth reflection member **84** is disposed on the fourth side wall portion **33***f* of the housing **31** to face the second side surface **51***f* of the first wavelength conversion element **51**, the region of the first light guide portion **71** at the second side surface **51***f* side, the second side surface **52***f* of the second wavelength conversion element **52**, and the region of the second light guide portion **72** at the second side surface **52***f* side.

[0077] The third reflection member **83** reflects the yellow fluorescence Y, the blue fluorescence B, the first excitation light E**1**, and the second excitation light E**2**. Accordingly, the third reflection member **83** reflects the first excitation light E**1** reflected by the front surface **51***a* of the first wavelength conversion element **51**, entering the first light guide portion **71**, and reaching the third reflection member **83** and enters the light into the first wavelength conversion element **51**. Thereby, the conversion efficiency from the first excitation light E**1** to the yellow fluorescence Y can be increased. Further, the third reflection member **83** reflects the second excitation light E**2** reflected by the front surface **52***a* of the second wavelength conversion element **52**, entering the second light guide portion **72**, and reaching the third reflection member **83** and enters the light into the second wavelength conversion element **52**. Thereby, the conversion efficiency from the second excitation light E**2** to the blue fluorescence B can be increased.

[0078] Furthermore, the third reflection member **83** reflects the yellow fluorescence Y emitted from the first wavelength conversion element **51**, entering the first light guide portion **71**, and reaching the third reflection member **83** and the yellow fluorescence Y guided inside the first wavelength conversion element **51** and reaching the third reflection member **83**. Thereby, the loss of the yellow fluorescence Y can be suppressed. In addition, the third reflection member **83** reflects the blue fluorescence B emitted from the second wavelength conversion element **52**, entering the second light guide portion **72**, and reaching the third reflection member **83** and the blue fluorescence B guided inside the second wavelength conversion element **52** and reaching the third reflection member **83**. Thereby, the loss of the blue fluorescence B can be suppressed.

[0079] Similarly, the fourth reflection member **84** reflects the yellow fluorescence Y, the blue fluorescence B, the first excitation light E**1**, and the second excitation light E**2**. The functions and effects of the fourth reflection member **84** are the same as those of the above described third reflection member **83**. The third reflection member **83** and the fourth reflection member **84** include, for example, metal films, dielectric multilayer films, and scattering members.

[0080] As shown in FIG. **1**, the optical integration system **90** is provided at the light exiting side of the light source device **30**A. The optical integration system **90** includes a first lens array **91** and a second lens array **92**. The optical integration system **90**, along with the superimposing system **94**, functions as a homogeneous illumination system that homogenizes the intensity distribution of the white light LW emitted from the light source device **30**A in the respective light modulation devices **400**R, **400**G, **400**B as illuminated regions. The white light LW emitted from the light source device **30**A enters the first lens array **91**.

[0081] The first lens array **91** includes a plurality of first lenses **91***a*. The plurality of first lenses **91***a* are arranged in a matrix form in a plane parallel to the YZ-plane orthogonal to the optical axis AX**1** of the illumination device **20**. The plurality of first lenses **91***a* divide the white light LW emitted from the light source device **30**A into a plurality of partial luminous fluxes. The shapes of the respective first lenses **91***a* are rectangular shapes substantially similar to the shapes of the image formation areas of the light modulation devices **400**R, **400**G, **400**B. Accordingly, the respective partial luminous fluxes emitted from the first lens array **91** efficiently enter the image formation areas of the light modulation devices **400**R, **400**G, **400**B.

[0082] The white light LW emitted from the first lens array **91** travels toward the second lens array **92**. The second lens array **92** is disposed to face the first lens array **91**. The second lens array **92** includes a plurality of second lenses **92***a* corresponding to the plurality of first lenses **91***a* of the first lens array **91**. The second lens array **92**, along with the superimposing system **94**, forms respective images of the plurality of first lenses **91***a* of the first lens array **91** in the vicinities of the image formation areas of the light modulation devices **400**R, **400**G, **400**B. The plurality of second lenses **92***a* are arranged in a matrix form in a plane parallel to the YZ-plane orthogonal to the optical axis AX**1** of the illumination device **20**. The superimposing system **94** includes a single convex lens.

[0083] In the embodiment, each first lens **91***a* of the first lens array **91** and each second lens **92***a* of the second lens array **92** have the same size as each other, however, may have different sizes from each other. Further, in the embodiment, the first lenses **91***a* of the first lens array **91** and the second lenses **92***a* of the second lens array **92** are arranged in positions where the optical axes thereof are aligned with each other, however, may be arranged in positions where the optical axes thereof deviate from each other.

[0084] The polarization conversion element **93** converts the polarization direction of the white light LW emitted from the second lens array **92**. Specifically, the polarization conversion element **93** converts each of the partial luminous fluxes of the white light LW divided by the first lens array **91** and then emitted from the second lens array **92** into a linearly-polarized light. The polarization conversion element **93** includes a polarization separation layer (not shown), a reflection layer (not shown), and a retardation layer (not shown). The polarization separation layer transmits one linearly-polarized component of the polarization components contained in the white light LW emitted from the light source device **30**A without change, and reflects the other linearly-polarized component in a direction perpendicular to the optical axis AX**1**. The reflection layer reflects the other linearly-polarized component reflected by the polarization separation layer in a direction parallel to the

optical axis AX**1**. The retardation layer converts the other linearly-polarized component reflected by the reflection layer into the one linearly-polarized component.

[0085] As below, a behavior of light in the light source device **30**A of the embodiment will be described.

[0086] As shown in FIG. **3**, in the light source device **30**A, the first excitation light E**1** emitted from the first light source **41** is transmitted through the first optical layer **61** and the first light-transmissive member **73** and enters the first wavelength conversion element **51**. Note that part of the first excitation light E**1** is backscattered by the front surface **51***a* of the first wavelength conversion element **51** and travels toward the first light source **41** side, and is reflected by the first optical layer **61** or the first light-transmissive member **73** and then enters the first wavelength conversion element **51**.

[0087] When the first excitation light E**1** enters the first wavelength conversion element **51**, the phosphor contained in the first wavelength conversion element **51** is excited, and yellow fluorescence Y is emitted from a certain light emission point. Concurrently, the first excitation light E**1** entering the phosphor is diffused and propagates to a region wider than the incident region, and thereby, the so-called blurring of the yellow fluorescence Y that the width of the emission region of the yellow fluorescence Y becomes wider occurs.

[0088] The yellow fluorescence Y entering the front surface **51***a* and the back surface **51***b* of the first wavelength conversion element **51** at an incidence angle smaller than the critical angle is emitted from the first wavelength conversion element **51**, enters the first light-transmissive member **73**, and propagates inside the first light-transmissive member **73**. Concurrently, fluorescence Y**1** traveling toward the +X side is reflected by the first optical layer **61**, propagates inside the first light-transmissive member **73**, and is emitted to the outside from the end surface of the first light-transmissive member **73** at the second end surface **51***d* side.

[0089] On the other hand, yellow fluorescence Y**2** traveling toward the −X side and reaching the first reflection member **81** is reflected by the first reflection member **81**, then travels toward the +X side, and enters the first wavelength conversion element **51** again. In the embodiment, since the first wavelength conversion element **51** is formed using the transparent phosphor, scattering of the yellow fluorescence Y**2** does not occur inside the first wavelength conversion element **51**, and the traveling direction of yellow fluorescence Y**2** is not changed inside the first wavelength conversion element **51**. The refractive index of the first wavelength conversion element **51** and the refractive index of the second wavelength conversion element **52** are substantially the same. Accordingly, the yellow fluorescence Y**2** is not substantially refracted at the interface between the first wavelength conversion element **51** and the second wavelength conversion element **52**, but enters the second wavelength conversion element **52** from the first wavelength conversion element **51**. The yellow fluorescence Y**2** entering the second wavelength conversion element **52** enters the second light-transmissive member **74**, and is emitted to the outside from the end surface of the second light-transmissive member **74** at the second end surface **52***d* side.

[0090] Of the yellow fluorescence Y emitted from the first wavelength conversion element **51**, yellow fluorescence Y**0** perpendicularly entering the first optical layer **61** is repeatedly reflected between the first optical layer **61** and the second optical layer **62** because the first wavelength conversion element **51** is formed using the transparent phosphor and the traveling direction of the yellow fluorescence Y**0** is not changed inside the first wavelength conversion element **51**. Note that part of the yellow fluorescence Y**0** is absorbed by the phosphor while propagating inside the first wavelength conversion element **51** and the second wavelength conversion element **52** and results in a loss.

[0091] Yellow fluorescence Y**3** entering the front surface **51***a* of the first wavelength conversion element **51** at an incidence angle equal to or larger than the critical angle is totally reflected by the front surface **51***a* of the first wavelength conversion element **51**. Here, the first wavelength conversion element **51** and the second wavelength conversion element **52** are formed using the transparent phosphor and the traveling direction of the yellow fluorescence Y**3** is not changed inside the first wavelength conversion element **51** and the second wavelength conversion element **52**, and thereby, the incidence angle of the yellow fluorescence Y**3** with respect to the front surface **52***a* of the second wavelength conversion element **52** is not changed. Accordingly, the yellow fluorescence Y**3** is repeatedly totally reflected between the front surface **51***a* of the first wavelength conversion element **51** and the front surface **52***a* of the second wavelength conversion element **52**, and emitted from the second end surface **51***d* or the second end surface **52***d*.

[0092] On the other hand, the second excitation light E**2** emitted from the second light source **42** is transmitted through the second optical layer **62** and the second light-transmissive member **74** and enters the second wavelength conversion element **52**. Part of the second excitation light E**2** is backscattered by the front surface **52***a* of the second wavelength conversion element **52** and travels toward the second light source **42** side, and is reflected by the second optical layer **62** or the second light-transmissive member **74** and then enters the second wavelength conversion element **52**.

[0093] When the second excitation light E**2** enters the second wavelength conversion element **52**, the phosphor contained in the second wavelength conversion element **52** is excited, and blue fluorescence B is emitted from a certain light emission point. Concurrently, the second excitation light E**2** entering the phosphor is diffused and propagates to a region wider than the incident region, and thereby, the so-called blurring of the blue fluorescence B that the width of the emission region of the blue fluorescence B becomes wider occurs.

[0094] Blue fluorescence B entering the front surface **52***a* of the second wavelength conversion element **52** at an incidence angle smaller than the critical angle is emitted from the second wavelength conversion element **52**, enters the second light-transmissive member **74**, and propagates inside the second light-transmissive member **74**. Concurrently, blue fluorescence B**1** traveling toward the +X side is emitted to the outside from the end surface of the second light-transmissive member **74** at the second end surface **52***d* side. Alternatively, the blue fluorescence traveling toward the +X side is reflected by the second optical layer **62**, then, propagates inside the second light-transmissive member **74**, and is emitted to the outside from the end surface of the second light-transmissive member **74** at the second end surface **52***d* side.

[0095] On the other hand, blue fluorescence B**2** traveling toward the −X side and reaching the first reflection member **81** is reflected by the first reflection member **81**, then travels

toward the +X side, is reflected by the second optical layer **62**, then, propagates inside the second light-transmissive member **74**, and is emitted to the outside from the end surface of the second light-transmissive member **74** at the second end surface **52***d* side.

[0096] Of the blue fluorescence B converted by the second wavelength conversion element **52**, fluorescence B**3** enters the first wavelength conversion element **51** from the back surface **52***b* of the second wavelength conversion element **52**. Further, other blue fluorescence B**4** is emitted to the second light-transmissive member **74**, reflected by the second optical layer **62**, then, propagates inside the second wavelength conversion element **52**, and enters the first wavelength conversion element **51** from the back surface **52***b* of the second wavelength conversion element **52**. The blue fluorescence B**3**, B**4** entering the first wavelength conversion element **51** excites the yellow phosphor contained in the first wavelength conversion element **51**. Thereby, the blue fluorescence B**3**, B**4** is converted into yellow fluorescence Y, and the yellow fluorescence Y is emitted from a certain light emission point of the first wavelength conversion element **51**.

[0097] As described above, the light source device **30**A can emit the white light LW containing the yellow fluorescence Y converted by the first wavelength conversion element **51** and the blue fluorescence B converted by the second wavelength conversion element **52** to the outside from the extraction opening **33***k* of the housing **31**.

[0098] As shown in FIG. **2**, in a plan view in the X-axis direction as the normal direction of the second end surface **52***d* of the second wavelength conversion element **52**, the extraction opening **33***k* overlaps with the first light guide portion **71**, the first wavelength conversion element **51**, the second wavelength conversion element **52**, and the second light guide portion **72**. Accordingly, the end surface of the first light-transmissive member **73** at the second end surface **51***d* side, the second end surface **51***d* of the first wavelength conversion element **51**, the second end surface **52***d* of the second wavelength conversion element **52**, and the end surface of the second light-transmissive member **74** at the second end surface **52***d* side are exposed to the outside through the extraction opening **33***k*. The extraction opening **33***k* may be closed by a lid including a light-transmissive member so as not to expose the respective end surfaces to the outside. However, when the lid is provided, some of the yellow fluorescence Y and the blue fluorescence B may be reflected by the surface of the lid and not be extracted to the outside. Therefore, it is desirable not to provide the lid in order to increase the extraction efficiency of the yellow fluorescence Y and the blue fluorescence B. In the example of FIG. **2**, the extraction opening **33***k* also overlaps with the first optical layer **61** and the second optical layer **62**, however, the opening does not necessarily overlap with the first optical layer **61** or the second optical layer **62**.

[0099] As described above, from the light source device **30**A, the white light LW emitted from the end surface of the first light-transmissive member **73** at the second end surface **51***d* side, the second end surface **51***d* of the first wavelength conversion element **51**, the second end surface **52***d* of the second wavelength conversion element **52**, and the end surface of the second light-transmissive member **74** at the second end surface **52***d* side can be extracted to the outside through the minimum extraction opening **33***k*. Thereby, etendue of the white light LW is smaller in the light source device **30**A, and the loss of the white light LW in the optical members including the optical integration system **90** disposed downstream of the light source device **30**A can be reduced. As a result, the use efficiency of the white light LW in the light source device **30**A can be increased.

[0100] In addition, the ratio between the thickness of the first wavelength conversion element **51** and the thickness of the second wavelength conversion element **52** along the arrangement direction (Y-axis direction) in which the first wavelength conversion element **51** and the second wavelength conversion element **52** are arranged is changed, and thereby, the ratio between the amount of the yellow fluorescence Y converted by the first wavelength conversion element **51** and the amount of the blue fluorescence B converted by the second wavelength conversion element **52** can be changed. Accordingly, the color temperature of the white light LW emitted from the light source device **30**A can be adjusted. As a result, the color of the image projected from the projector **10** can be adjusted. At the same time, the ratio between the amount of the first excitation light E**1** from the first light source **41** and the amount of the second excitation light E**2** from the second light source **42** is changed, and thereby, the color temperature of the white light LW may be adjusted.

Effects of First Embodiment

[0101] The light source device **30**A of the embodiment includes the first light source **41** that emits the first excitation light E**1**, the first wavelength conversion element **51** that converts the first excitation light E**1** into the yellow fluorescence Y, the first optical layer **61** that is disposed between the first light source **41** and the first wavelength conversion element **51** and transmits the first excitation light E**1** and reflects the yellow fluorescence Y, the first light guide portion **71** that is disposed between the first optical layer **61** and the first wavelength conversion element **51** and guides the yellow fluorescence Y converted by the first wavelength conversion element **51**, the second light source **42** that emits the second excitation light E**2**, the second wavelength conversion element **52** that converts the second excitation light E**2** into the blue fluorescence B, the second optical layer **62** that is disposed between the second light source **42** and the second wavelength conversion element **52** and transmits the second excitation light E**2** and reflects the blue fluorescence B, the second light guide portion **72** that is disposed between the second optical layer **62** and the second wavelength conversion element **52** and guides the blue fluorescence B converted by the second wavelength conversion element **52**, and the first reflection member **81** that reflects the first excitation light E**1**, the yellow fluorescence Y, the second excitation light E**2**, and the blue fluorescence B. The first wavelength conversion element **51** includes the front surface **51***a* entered by the first excitation light E**1** via the first optical layer **61** and the first light guide portion **71**, and the first end surface **51***c* and the second end surface **51***d* that cross the front surface **51***a* and face opposite sides to each other. The second wavelength conversion element **52** includes the front surface **52***a* entered by the second excitation light E**2** via the second optical layer **62** and the second light guide portion **72**, and the first end surface **52***c* and the second end surface **52***d* that cross the front surface **52***a* and face opposite sides to each other. The first reflection member **81** is disposed in the region at the first end surface **51***c* side of the first light guide portion **71** and the region at the first

end surface **52***c* side of the second light guide portion **72**. The second wavelength conversion element **52** is disposed at the side opposite to the first light source **41** with respect to the first wavelength conversion element **51**. The yellow fluorescence Y converted by the first wavelength conversion element **51** travels through the first light guide portion **71** and is emitted from the region of the first light guide portion **71** at the second end surface **51***d* side, and the blue fluorescence B converted by the second wavelength conversion element **52** travels through the second light guide portion **72** and is emitted from the region of the second light guide portion **72** at the second end surface **52***d* side.

[0102] As described above, according to the light source device **30**A of the embodiment, the yellow fluorescence Y generated in the first wavelength conversion element **51** travels through the first light guide portion **71**, the blue fluorescence B generated in the second wavelength conversion element **52** travels through the second light guide portion **72**, and are emitted from the regions of the respective light guide portions **71** and **72** at the second end surface **51***d* and **52***d* sides. Therefore, as compared with the light source device of related art in which all the fluorescence propagates inside the wavelength conversion element, the loss of the yellow fluorescence Y and the blue fluorescence B is smaller, and the use efficiency of the yellow fluorescence Y and the blue fluorescence B can be increased. Further, the light source device **30**A of the embodiment can efficiently emit the white light LW formed by combination of the yellow fluorescence Y and the blue fluorescence B.

[0103] The projector **10** of the embodiment includes the light source device **30**A, the light modulation devices **400**R, **400**G, **400**B that modulate the light emitted from the light source device **30**A, and the projection optical device **600** that projects the lights modulated by the light modulation devices **400**R, **400**G, **400**B.

[0104] According to the configuration, since the light source device **30**A emits the white light LW, with only one light source device, the projector **10** having the highly efficient and simple configuration can be realized.

Second Embodiment

[0105] As below, a second embodiment of the present disclosure will be described using FIG. **5**.

[0106] Since the basic configuration of the light source device of the second embodiment is the same as that of the first embodiment, the description of the basic configuration of the light source device is omitted.

[0107] FIG. **5** is a cross-sectional view of a light source device **30**B of the second embodiment cut along the XY-plane. In FIG. **5**, the component elements common to those in the drawings used in the first embodiment have the same signs and the description thereof is omitted.

[0108] As shown in FIG. **5**, the light source device **30**B of the embodiment includes a housing **31**, a first light source **41**, a first wavelength conversion element **51**, a first optical layer **61**, a first light guide portion **71**, a second light source **42**, a second wavelength conversion element **52**, a second optical layer **62**, a second light guide portion **72**, a first reflection member **81**, a third reflection member (not shown), and a fourth reflection member (not shown).

[0109] In the light source device **30**A of the first embodiment, the first wavelength conversion element **51** and the second wavelength conversion element **52** are bonded to each other via the optical adhesive. On the other hand, in the light source device **30**B of the embodiment, the first wavelength conversion element **51** and the second wavelength conversion element **52** are not joined to each other, but separated from each other. Air is present in a space between the first wavelength conversion element **51** and the second wavelength conversion element **52**. That is, an air layer **56** is provided between the first wavelength conversion element **51** and the second wavelength conversion element **52**.

[0110] The other configurations of the light source device **30**B are the same as those of the light source device **30**A of the first embodiment.

Effects of Second Embodiment

[0111] In the embodiment, the same effects as those of the first embodiment can be obtained. That is, the yellow fluorescence Y propagates through the first light guide portion **71** and the blue fluorescence B propagates through the second light guide portion **72**, and thereby, the light source device **30**B with the smaller loss of the yellow fluorescence Y and the blue fluorescence B and the higher use efficiency of the yellow fluorescence Y and the blue fluorescence B can be realized and the light source device **30**B that can efficiently emit the white light LW can be realized.

[0112] In the first embodiment, since the first wavelength conversion element **51** and the second wavelength conversion element **52** are bonded to each other, part of the blue fluorescence B generated in the second wavelength conversion element **52** enters the first wavelength conversion element **51** and is converted into the yellow fluorescence Y. In this case, the amount of the blue fluorescence B decreases, and the yellow fluorescence Y is generated through the two wavelength conversions of the conversion from the second excitation light E**2** into the blue fluorescence B in the second wavelength conversion element **52** and the conversion from the blue fluorescence B into the yellow fluorescence Y in the first wavelength conversion element **51**. Accordingly, there is a problem that the wavelength conversion efficiency becomes lower. Further, when part of the yellow fluorescence Y generated in the first wavelength conversion element **51** enters the second wavelength conversion element **52**, a loss of yellow fluorescence Y occurs.

[0113] On the other hand, in the embodiment, since the air layer **56** is provided between the first wavelength conversion element **51** and the second wavelength conversion element **52**, a difference in refractive index between the back surfaces **51***b*, **52***b* of the respective wavelength conversion elements **51**, **52** is larger than that in the first embodiment, and critical angles in the back surfaces **51***b*, **52***b* of the respective wavelength conversion elements **51**, **52** are larger than those in the first embodiment. Accordingly, when the fluorescence Y or B generated by one wavelength conversion element **51** or **52** reaches the back surface **51***b* or **52***b* of the wavelength conversion element **51** or **52**, it is easier for the fluorescence to be totally reflected at the interface with the air layer **56** and harder to enter the other wavelength conversion element **52** or **51**. Thereby, the fluorescence B**3** shown in FIG. **3** of the first embodiment enters the first wavelength conversion element **51**, however, as shown in FIG. **5**, the fluorescence B**3** of the embodiment is totally reflected by the back surface **52***b* of the second wavelength conversion element **52**, but does not enter the first wavelength conversion element **51**. Therefore, according to the light source device **30**A of the embodiment, the amount of

the blue fluorescence B can be secured and the decrease in wavelength conversion efficiency can be suppressed. In addition, since the entry of the yellow fluorescence Y into the second wavelength conversion element **52** is suppressed, absorption of the yellow fluorescence Y by the second wavelength conversion element **52** is suppressed, and the decrease in amount of the yellow fluorescence Y can be suppressed.

Third Embodiment

[0114] As below, a third embodiment of the present disclosure will be described using FIG. **6**.

[0115] Since the basic configuration of the light source device of the third embodiment is the same as that of the first embodiment, the description of the basic configuration of the light source device is omitted.

[0116] FIG. **6** is a cross-sectional view of a light source device **30**C of the third embodiment cut along the XY-plane. In FIG. **6**, the component elements common to those in the drawings used in the first embodiment have the same signs and the description thereof is omitted.

[0117] As shown in FIG. **6**, the light source device **30**C of the embodiment includes a housing **31**, a first light source **41**, a first wavelength conversion element **51**, a first optical layer **61**, a first light guide portion **71**, a second light source **42**, a second wavelength conversion element **52**, a second optical layer **62**, a second light guide portion **72**, a first reflection member **81**, a second reflection member **82**, a third reflection member (not shown), and a fourth reflection member (not shown).

[0118] In the light source device **30**A of the first embodiment, the first wavelength conversion element **51** and the second wavelength conversion element **52** are bonded to each other via the optical adhesive. On the other hand, in the light source device **30**C of the embodiment, the second reflection member **82** is disposed between the first wavelength conversion element **51** and the second wavelength conversion element **52**. The second reflection member **82** reflects the first excitation light E**1**, the yellow fluorescence Y, the second excitation light E**2**, and the blue fluorescence B. The second reflection member **82** includes, for example, a metal film or a dielectric multilayer film.

[0119] The other configurations of the light source device **30**C are the same as those of the light source device **30**A of the first embodiment.

Effects of Third Embodiment

[0120] In the embodiment, the same effects as those of the first embodiment can be obtained. That is, the yellow fluorescence Y propagates through the first light guide portion **71** and the blue fluorescence B propagates through the second light guide portion **72**, and thereby, the light source device **30**C with the smaller loss of the yellow fluorescence Y and the blue fluorescence B and the higher use efficiency of the yellow fluorescence Y and the blue fluorescence B can be realized and the light source device **30**C that can efficiently emit the white light LW can be realized.

[0121] In the embodiment, since the second reflection member **82** is provided between the first wavelength conversion element **51** and the second wavelength conversion element **52**, when the fluorescence Y or B generated in one wavelength conversion element **51** or **52** reaches the back surface **51***b* or **52***b* of the wavelength conversion element **51** or **52**, the fluorescence is reflected by the second reflection member **82**, but does not enter the other wavelength conversion element **52** or **51**. Thereby, the fluorescence B**3**, B**4** shown in FIG. **3** of the first embodiment enters the first wavelength conversion element **51**, however, as shown in FIG. **6**, the fluorescence B**3**, B**4** of the embodiment is reflected by the second reflection member **82**, but does not enter the wavelength conversion element **51**. Therefore, the amount of the blue fluorescence B can be secured and the decrease in wavelength conversion efficiency can be suppressed. Further, since the yellow fluorescence Y is reflected by the second reflection member **82**, but does not enter the second wavelength conversion element **52**, absorption of the yellow fluorescence Y can be reduced and the decrease in amount of the yellow fluorescence Y can be suppressed.

Fourth Embodiment

[0122] As below, a fourth embodiment of the present disclosure will be described using FIG. **7**.

[0123] Since the basic configuration of the light source device of the fourth embodiment is the same as that of the first embodiment, the description of the basic configuration of the light source device is omitted.

[0124] FIG. **7** is a cross-sectional view of a light source device **30**D of the fourth embodiment cut along the XY-plane. In FIG. **7**, the component elements common to those in the drawings used in the first embodiment have the same signs and the description thereof is omitted.

[0125] As shown in FIG. **7**, the light source device **30**D of the embodiment includes a housing **31**, a first light source **41**, a first wavelength conversion element **51**, a first optical layer **61**, a first light guide portion **71**, a second light source **42**, a second wavelength conversion element **52**, a second optical layer **62**, a second light guide portion **72**, a first reflection member **81**, a scattering layer **86**, a third reflection member (not shown), and a fourth reflection member (not shown).

[0126] In the light source device **30**A of the first embodiment, the first wavelength conversion element **51** and the second wavelength conversion element **52** are bonded to each other via the optical adhesive. On the other hand, in the light source device **30**D of the embodiment, the scattering layer **86** is disposed between the first wavelength conversion element **51** and the second wavelength conversion element **52**. The scattering layer **86** reflects the first excitation light E**1**, the yellow fluorescence Y, the second excitation light E**2**, and the blue fluorescence B, and changes emission angles of the respective lights. The scattering layer **86** is formed using, for example, a scattering material containing barium sulfate.

[0127] The other configurations of the light source device **30**D are the same as those of the light source device **30**B of the first embodiment.

Effects of Fourth Embodiment

[0128] In the embodiment, the same effects as those of the first embodiment can be obtained. That is, the yellow fluorescence Y propagates through the first light guide portion **71** and the blue fluorescence B propagates through the second light guide portion **72**, and thereby, the light source device **30**D with the smaller loss of the yellow fluorescence Y and the blue fluorescence B and the higher

use efficiency of the yellow fluorescence Y and the blue fluorescence B can be realized and the light source device **30**D that can efficiently emit the white light LW can be realized.

[0129] In the embodiment, since the scattering layer **86** is provided between the first wavelength conversion element **51** and the second wavelength conversion element **52**, when the fluorescence Y or B generated in one wavelength conversion element **51** or **52** reaches the back surface **51***b* or **52***b* of the wavelength conversion element **51** or **52**, the fluorescence is scattered and reflected by the scattering layer **86** and the emission angle is changed, and it is harder for the fluorescence to enter the other wavelength conversion element **52** or **51**. Thereby, the fluorescence B**3**, B**4** shown in FIG. **3** of the first embodiment enters the first wavelength conversion element **51**, however, as shown in FIG. **7**, the fluorescence B**3**, B**4** of the embodiment is scattered by the scattering layer **86**, enters the second light-transmissive member **74**, not entering the first wavelength conversion element **51**, propagates in the second light-transmissive member **74**, and is emitted to the outside. Therefore, the amount of the blue fluorescence B can be secured and the decrease in wavelength conversion efficiency can be suppressed. Further, the yellow fluorescence Y is scattered by the scattering layer **86** and it is harder for the fluorescence to enter the second wavelength conversion element **52**, and absorption of the yellow fluorescence Y can be reduced and the decrease in amount of the yellow fluorescence Y can be suppressed.

Fifth Embodiment

[0130] As below, a fifth embodiment of the present disclosure will be described using FIGS. **8** to **10**.

[0131] Since the basic configuration of the light source device of the fifth embodiment is the same as that of the first embodiment, the description of the basic configuration of the light source device is omitted.

[0132] FIG. **8** is a perspective view of a light source device **30**E of the fifth embodiment. FIG. **9** is a cross-sectional view of the light source device **30**E cut along line IX-IX in FIG. **8**. In FIGS. **8** and **9**, the component elements common to those in the drawings used in the first embodiment have the same signs and the description thereof is omitted.

[0133] As shown in FIGS. **8** and **9**, the light source device **30**E of the embodiment includes a housing **31**, a first light source **41**, a first wavelength conversion element **51**, a first optical layer **61**, a second light source **42**, a second wavelength conversion element **52**, a second optical layer **62**, a light guide portion **76**, a first reflection member **81**, a third reflection member (not shown), and a fourth reflection member (not shown).

[0134] As shown in FIG. **9**, in the light source device **30**E of the embodiment, the first optical layer **61** is disposed on the front surface **51***a* of the first wavelength conversion element **51**. That is, the first optical layer **61** and the first wavelength conversion element **51** are in contact with each other. The second optical layer **62** is disposed on the front surface **52***a* of the second wavelength conversion element **52**. That is, the second optical layer **62** and the second wavelength conversion element **52** are in contact with each other.

[0135] The light guide portion **76** is disposed between the first wavelength conversion element **51** and the second wavelength conversion element **52**. The light guide portion **76** includes an air layer **77**. That is, the first wavelength conversion element **51** and the second wavelength conversion element **52** are disposed apart from each other, and air is present between the first wavelength conversion element **51** and the second wavelength conversion element **52**. The light guide portion **76** guides the yellow fluorescence Y converted by the first wavelength conversion element **51** and the blue fluorescence B converted by the second wavelength conversion element **52**. The second wavelength conversion element **52** is disposed at the side opposite to the first light source **41** with respect to the first wavelength conversion element **51**. The first reflection member **81** is disposed in the region at the first end surface **51***c* side of the light guide portion **76**.

[0136] As shown in FIG. **8**, in a plan view in the X-axis direction as the normal direction of the second end surface **51***d* of the first wavelength conversion element **51**, the extraction opening **33***k* overlaps with the first wavelength conversion element **51**, the light guide portion **76**, and the second wavelength conversion element **52**. The second end surface **51***d* of the first wavelength conversion element **51**, the region of the light guide portion **76** at the second end surface **51***d* side, and the second end surface **52***d* of the second wavelength conversion element **52** are exposed to the outside through the extraction opening **33***k*. In the example of FIG. **8**, the extraction opening **33***k* also overlaps with the first optical layer **61** and the second optical layer **62**, however, the opening does not necessarily overlap with the first optical layer **61** or the second optical layer **62**.

[0137] The other configurations of the light source device **30**E are the same as those of the light source device **30**A of the first embodiment.

[0138] As below, a behavior of light in the light source device **30**E of the embodiment will be described.

[0139] As shown in FIG. **9**, in the light source device **30**E, the first excitation light E**1** emitted from the first light source **41** is transmitted through the first optical layer **61** and enters the first wavelength conversion element **51**. When the first excitation light E**1** enters the first wavelength conversion element **51**, the phosphor contained in the first wavelength conversion element **51** is excited, and yellow fluorescence Y is emitted from a certain light emission point.

[0140] The yellow fluorescence Y**1** entering the back surface **51***b* of the first wavelength conversion element **51** at an incidence angle smaller than the critical angle is emitted from the first wavelength conversion element **51** and travels through the air layer **77**, and then is emitted to the outside from the region of the air layer **77** at the second end surface **51***d* side. On the other hand, the yellow fluorescence Y**2** entering the back surface **51***b* of the first wavelength conversion element **51** at an incidence angle equal to or larger than the critical angle is not changed in traveling direction because the first wavelength conversion element **51** is formed using the transparent phosphor, travels inside the first wavelength conversion element **51** while being repeatedly totally reflected by the back surface **51***b* of the first wavelength conversion element **51** and reflected by the first optical layer **61**, and then, is emitted to the outside from the second end surface **51***d* of the first wavelength conversion element **51**.

[0141] The yellow fluorescence Y**3** traveling through the air layer **77** toward the +X side and entering the second wavelength conversion element **52** travels through the air layer **77** while being repeatedly reflected by the second

optical layer **62** and reflected by the first optical layer **61**, and then, is emitted to the outside from the region of the air layer **77** at the second end surface **51***d* side. The yellow fluorescence Y**4** traveling through the air layer **77** toward the −X side and entering the second wavelength conversion element **52** travels through the air layer **77** while being repeatedly reflected by the second optical layer **62** and reflected by the first optical layer **61**, then, is reflected by the first reflection member **81**, travels through the air layer **77** while being repeatedly reflected by the second optical layer **62** and reflected by the first optical layer **61** again, and then, is emitted to the outside from the region of the air layer **77** at the second end surface **51***d* side. Note that part of the yellow fluorescence Y**3**, Y**4** entering the second wavelength conversion element **52** is absorbed by the phosphor contained in the second wavelength conversion element **52** and results in a loss.

[0142] On the other hand, the second excitation light E**2** emitted from the second light source **42** is transmitted through the second optical layer **62** and enters the second wavelength conversion element **52**. When the second excitation light E**2** enters the second wavelength conversion element **52**, the phosphor contained in the second wavelength conversion element **52** is excited, and blue fluorescence B is emitted from a certain light emission point.

[0143] The blue fluorescence B**1** entering the back surface **52***b* of the second wavelength conversion element **52** at an incidence angle smaller than the critical angle is emitted from the second wavelength conversion element **52** and travels through the air layer **77**, and then, is emitted to the outside from the region of the air layer **77** at the second end surface **52***d* side. On the other hand, the blue fluorescence B**2** entering the back surface **52***b* of the second wavelength conversion element **52** at an incidence angle equal to or larger than the critical angle is not changed in traveling direction because the second wavelength conversion element **52** is formed using the transparent phosphor, travels inside the second wavelength conversion element **52** while being repeatedly totally reflected by the back surface **52***b* of the second wavelength conversion element **52** and reflected by the second optical layer **62**, and then, is emitted to the outside from the second end surface **52***d* of the second wavelength conversion element **52**.

[0144] The blue fluorescent light B**3** traveling through the air layer **77** toward the −X side and entering the first reflection member **81** is reflected by the first reflection member **81**, then, travels through the air layer **77**, and is emitted to the outside from the region of the air layer **77** at the second end surface **52***d* side. The blue fluorescent light B**4** emitted to the air layer **77** and entering the first wavelength conversion element **51** is converted into yellow fluorescence Y**5** by the phosphor contained in the first wavelength conversion element **51** and emitted to the outside.

[0145] As described above, the yellow fluorescence Y converted by the first wavelength conversion element **51** is emitted to the outside from the light guide portion **76** including the air layer **77** and the first wavelength conversion element **51**. The blue fluorescence B converted by the second wavelength conversion element **52** is emitted to the outside from the light guide portion **76** including the air layer **77** and the second wavelength conversion element **52**. That is, the yellow fluorescence Y converted by the first wavelength conversion element **51** and the blue fluorescence B converted by the second wavelength conversion element **52** travel through the light guide portion **76** and are emitted from the region of the light guide portion **76** at the second end surface **51***d* side. As described above, the light source device **30**E can emit the white light LW containing the yellow fluorescence Y converted by the first wavelength conversion element **51** and the blue fluorescence B converted by the second wavelength conversion element **52** to the outside from the extraction opening **33***k* of the housing **31**.

Effects of Fifth Embodiment

[0146] In the embodiment, the same effects as those of the first embodiment can be obtained. That is, the yellow fluorescence Y and the blue fluorescence B propagate through the light guide portion **76**, and thereby, the light source device **30**E with the smaller loss of the yellow fluorescence Y and the blue fluorescence B and the higher use efficiency of the yellow fluorescence Y and the blue fluorescence B can be realized and the light source device **30**E that can efficiently emit the white light LW can be realized.

[0147] In the first to fourth embodiments, the yellow fluorescence Y generated in the first wavelength conversion element **51** is mainly emitted from the region of the first light guide portion **71** in the extraction opening **33***k*, and the blue fluorescence B generated in the second wavelength conversion element **52** is mainly emitted from the region of the second light guide portion **72** in the extraction opening **33***k*. As described above, since the emission position of the yellow fluorescence Y and the emission position of the blue fluorescence B are different from each other, color unevenness may occur in the optical system downstream of the light source device. On the other hand, in the embodiment, the yellow fluorescence Y generated in the first wavelength conversion element **51** and the blue fluorescence B generated in the second wavelength conversion element **52** are emitted from the light guide portion **76** common to the lights. Accordingly, the yellow fluorescence Y and the blue fluorescence B are mixed and emitted from the same position, and thereby, color unevenness in the optical system downstream of the light source device **30**E can be suppressed.

[0148] In the embodiment, since the light guide portion **76** guiding the yellow fluorescence Y and the blue fluorescence B includes the air layer **77**, the following effects can be obtained.

[0149] FIG. **10** is a schematic diagram showing functions of the light source device **30**E of the embodiment. The behavior of the yellow fluorescence Y and the behavior of the blue fluorescent light B with respect to the air layer **77** are substantially the same and, here, the behavior of the blue fluorescent light B with respect to the air layer **77** is shown and described.

[0150] In the case where the light-transmissive member is disposed in the light guide portion as in the first to fourth embodiments, as shown in FIG. **10**, when the blue fluorescence B generated in the second wavelength conversion element **52** reaches an interface K between the second wavelength conversion element **52** and the light-transmissive member **74**, if an incidence angle α of the blue fluorescence B with respect to the interface K is smaller than the critical angle, the blue fluorescence B is not reflected at the interface K, but refracted at a refraction angle β**1** and

enters the light-transmissive member **74**. Here, when the material of the second wavelength conversion element **52** is SBCA and the material of the light-transmissive member **74** is quartz, the refractive index of the SBCA is, for example, about 1.5 to 2.0, and the refractive index of quartz is about 1.4, and a difference in refractive index between the second wavelength conversion element **52** and the light-transmissive member **74** is about 0.1 to 0.6 and the difference in refractive index is smaller.

[0151] In this case, the refraction angle β**1** is not so large with respect to the incidence angle α, and blue fluorescence B**5** entering the light-transmissive member **74** travels in a direction nearly perpendicular to the interface K, that is, a direction forming a large angle with respect to the X-axis. As a result, the blue fluorescence B**5** may leak to the outside from a surface **74***b* of the light-transmissive member **74** opposite to the interface K and result in a leakage light B**6**. Or, if the blue fluorescence B**5** becomes fluorescence B**7** reflected by the surface **74***b* of the light-transmissive member **74**, when the fluorescence propagates through the light-transmissive member **74** in the X-axis direction and reaches an end surface **74***d* of the light-transmissive member **74**, the incidence angle of the blue fluorescence B**7** with respect to the end surface **74***d* is larger, and thus, the blue fluorescence B**7** may be reflected by the end surface **74***d* and not be emitted from the end surface **74***d* and the extraction efficiency of the blue fluorescence B may be lower.

[0152] On the other hand, when the air layer **77** is adjacent to the second wavelength conversion element **52** as in the embodiment, the refractive index of the SBCA is, for example, about 1.5 to 2.0 and the refractive index of air is 1.0, and a difference in refractive index between the second wavelength conversion element **52** and the air layer **77** is about 0.5 to 1.0 and the difference in refractive index is larger than those in the first to fourth embodiments. Accordingly, a refraction angle β**2** is larger than the refraction angle β**1**, and blue fluorescence B**8** entering the air layer **77** travels in a direction forming a smaller angle with respect to the interface K, that is, a direction forming a smaller angle with respect to the X-axis, as compared with a case where the fluorescence enters the light-transmissive member **74**. As a result, when the blue fluorescence B**8** reaches an interface between the air layer **77** and another substance, it is easier for the fluorescence to be totally reflected and harder to leak to the outside. Further, in the embodiment, since the air layer **77** is opened to the external space in the extraction opening **33***k* and has no interface of refractive index, the blue fluorescence B**8** reaching the extraction opening **33***k* is not reflected or refracted, but emitted to the external space without change. With respect to the yellow fluorescence Y, the same effects as those of the blue fluorescence B can be obtained. With the above described functions, according to the light source device **30**E of the embodiment, the extraction efficiency of the yellow fluorescence Y and the blue fluorescence B can be increased as compared with the first to fourth embodiments.

[0153] According to the configuration of the embodiment, since the first wavelength conversion element **51** and the second wavelength conversion element **52** are disposed apart from each other, the wavelength conversion elements **51** and **52** can be efficiently cooled. As a result, the temperature rise of the respective wavelength conversion elements **51** and **52** can be suppressed, and the higher wavelength conversion efficiency can be maintained.

Sixth Embodiment

[0154] As below, a sixth embodiment of the present disclosure will be described using FIG. **11**.

[0155] Since the basic configuration of the light source device of the sixth embodiment is the same as that of the fifth embodiment, the description of the basic configuration of the light source device is omitted.

[0156] FIG. **11** is a cross-sectional view of a light source device **30**F of the sixth embodiment cut along the XY-plane. In FIG. **11**, the component elements common to those in the drawings used in the fifth embodiment have the same signs and the description thereof is omitted.

[0157] As shown in FIG. **11**, the light source device **30**F of the embodiment includes a housing **31**, a first light source **41**, a first wavelength conversion element **51**, a first optical layer **61**, a second light source **42**, a second wavelength conversion element **52**, a second optical layer **62**, a light guide portion **78**, a first reflection member **81**, a third reflection member (not shown), and a fourth reflection member (not shown).

[0158] In the light source device **30**E of the fifth embodiment, the light guide portion **76** includes the air layer **77**. On the other hand, in the light source device **30**F of the embodiment, a light-transmissive member **79** is disposed in the light guide portion **78**. The light-transmissive member **79** transmits the first excitation light E**1**, the yellow fluorescence Y, the second excitation light E**2**, and the blue fluorescence B. Like the first light-transmissive member **73** of the first embodiment or the like, the light-transmissive member **79** is formed using a light-transmissive material including, for example, borosilicate glass such as BK7, quartz, synthetic quartz, quartz crystal, SiC, GaN, MgO, YAG, sapphire, and diamond.

[0159] The other configurations of the light source device **30**F are the same as those of the light source device **30**E of the fifth embodiment.

[0160] A behavior of light in the light source device **30**F is substantially the same as that of the light source device **30**E of the fifth embodiment. That is, the yellow fluorescence Y converted by the first wavelength conversion element **51** and the blue fluorescence B converted by the second wavelength conversion element **52** travel inside the light-transmissive member **79** as the light guide portion **78** and are emitted from the end surface of the light-transmissive member **79** at the second end surface **51***d* side.

Effects of Sixth Embodiment

[0161] In the embodiment, the same effects as those of the first embodiment can be obtained. That is, the yellow fluorescence Y and the blue fluorescence B propagate through the light guide portion **78**, and thereby, the light source device **30**F with the smaller loss of the yellow fluorescence Y and the blue fluorescence B and the higher use efficiency of the yellow fluorescence Y and the blue fluorescence B can be realized and the light source device **30**F that can efficiently emit the white light LW can be realized.

[0162] Further, the same effects as those of the fifth embodiment can be obtained. That is, the yellow fluorescence Y and the blue fluorescence B are mainly emitted from the light guide portion **78**, and thereby, the color unevenness in the optical system downstream of the light source device **30**F can be suppressed. The respective wavelength conver-

sion elements **51** and **52** can be efficiently cooled, and thereby, the higher wavelength conversion efficiency can be maintained.

[0163] In the embodiment, since the light guide portion **78** includes the light-transmissive member **79**, the differences in refractive index between the respective wavelength conversion elements **51** and **52** and the light guide portion **78** are smaller and the critical angles at the interfaces between the respective wavelength conversion elements **51** and **52** and the light guide portion **78** are larger than those of the fifth embodiment in which the light guide portion **76** includes the air layer **77**. Thereby, it is harder for the respective fluorescence Y and B generated in the respective wavelength conversion elements **51** and **52** to be totally reflected at the interfaces with the light guide portion **78** and it is easier for the respective fluorescence Y and B to be extracted to the light guide portion **78**. Thereby, the loss due to reabsorption of the respective fluorescence Y and B can be suppressed.

Seventh Embodiment

[0164] As below, a seventh embodiment of the present disclosure will be described using FIG. **12**.

[0165] Since the basic configuration of the light source device of the seventh embodiment is the same as that of the sixth embodiment, the description of the basic configuration of the light source device is omitted.

[0166] FIG. **12** is a cross-sectional view of a light source device **30**G of the seventh embodiment cut along the XY-plane. In FIG. **12**, the component elements common to those in FIG. **11** used in the sixth embodiment have the same signs and the description thereof is omitted.

[0167] As shown in FIG. **12**, the light source device **30**G of the embodiment includes a housing **31**, a first light source **41**, a first wavelength conversion element **51**, a first optical layer **61**, a second light source **42**, a second wavelength conversion element **52**, a second optical layer **62**, a light guide portion **78**, a third optical layer **63**, a fourth optical layer **64**, a first reflection member **81**, a third reflection member (not shown), and a fourth reflection member (not shown).

[0168] In the embodiment, the light-transmissive member **79** is disposed in the light guide portion **78**. The third optical layer **63** is disposed between the light-transmissive member **79** and the second wavelength conversion element **52**. The third optical layer **63** has an optical property of transmitting the first excitation light E**1** and the blue fluorescence B and reflecting the yellow fluorescence Y. Note that the third optical layer **63** of the embodiment has an optical property of reflecting the second excitation light E**2**, however, may have an optical property of transmitting the second excitation light E**2**. The third optical layer **63** includes, for example, a dielectric multilayer film.

[0169] The fourth optical layer **64** is disposed between the light-transmissive member **79** and the first wavelength conversion element **51**. The fourth optical layer **64** has an optical property of transmitting the yellow fluorescence Y and reflecting the first excitation light E**1** and the blue fluorescence B. The fourth optical layer **64** of the embodiment has an optical property of reflecting the second excitation light E**2**, however, may have an optical property of transmitting the second excitation light E**2**. The fourth optical layer **64** includes, for example, a dielectric multilayer film.

[0170] The other configurations of the light source device **30**G are the same as those of the light source device **30**F of the sixth embodiment.

Effects of Seventh Embodiment

[0171] In the embodiment, the same effects as those of the first embodiment can be obtained. That is, the yellow fluorescence Y and the blue fluorescence B propagate through the light guide portion **78**, and thereby, the light source device **30**G with the smaller loss of the yellow fluorescence Y and the blue fluorescence B and the higher use efficiency of the yellow fluorescence Y and the blue fluorescence B can be realized and the light source device **30**G that can efficiently emit the white light LW can be realized.

[0172] Further, the same effects as those of the fifth embodiment can be obtained. That is, the yellow fluorescence Y and the blue fluorescence B are mainly emitted from the light guide portion **78**, and thereby, the color unevenness in the optical system downstream of the light source device **30**G can be suppressed. The respective wavelength conversion elements **51** and **52** can be efficiently cooled, and thereby, the higher wavelength conversion efficiency can be maintained.

[0173] In the embodiment, since the light guide portion **78** includes the light-transmissive member **79** like the sixth embodiment, the differences in refractive index between the respective wavelength conversion elements **51** and **52** and the light guide portion **78** are smaller and the critical angles at the interfaces between the respective wavelength conversion elements **51** and **52** and the light guide portion **78** are smaller than those of the fifth embodiment in which the light guide portion **76** includes the air layer **77**. Furthermore, in the embodiment, for example, the yellow fluorescence Y**3** traveling from the first wavelength conversion element **51** toward the second wavelength conversion element **52** is reflected by the third optical layer **63**, and is not entered into or absorbed by the second wavelength conversion element **52**. In addition, the blue fluorescence B**4** traveling from the second wavelength conversion element **52** toward the first wavelength conversion element **51** is reflected by the fourth optical layer **64**, and is not entered into the first wavelength conversion element **51** or converted into yellow fluorescence Y. Thereby, both the absorption of the yellow fluorescence Y entering the second wavelength conversion element **52** and the absorption of the blue fluorescence B entering the first wavelength conversion element **51** are suppressed, and the wavelength conversion efficiency can be increased as compared with the sixth embodiment.

Eighth Embodiment

[0174] As below, an eighth embodiment of the present disclosure will be described using FIG. **13**.

[0175] Since the basic configuration of the light source device of the eighth embodiment is the same as that of the seventh embodiment, the description of the basic configuration of the light source device is omitted.

[0176] FIG. **13** is a cross-sectional view of a light source device **30**H of the eighth embodiment cut along the XY-plane. In FIG. **13**, the component elements common to those in FIG. **12** used in the seventh embodiment have the same signs and the description thereof is omitted.

[0177] As shown in FIG. **13**, the light source device **30**H of the embodiment includes a housing **31**, a first light source **41**, a first wavelength conversion element **53**, a first optical layer **61**, a second light source **42**, a second wavelength conversion element **54**, a second optical layer **62**, a light guide portion **78**, a third optical layer **63**, a fourth optical layer **64**, a first reflection member **81**, a third reflection member (not shown), and a fourth reflection member (not shown).

[0178] In the light source device **30**G of the seventh embodiment, the first wavelength conversion element **51** and the second wavelength conversion element **52** are formed using the transparent phosphor. On the other hand, in the light source device **30**H of the embodiment, the first wavelength conversion element **53** and the second wavelength conversion element are formed using phosphor having a light scattering property. The phosphor having the light scattering property can be realized by dispersion of a medium having a different refractive index from the transparent phosphor, for example, a scatterer such as pores or fillers in the transparent phosphor. The first wavelength conversion element **53** has a front surface **53***a*, a back surface **53***b*, a first end surface **53***c*, and a second end surface **53***d*. The second wavelength conversion element **54** has a front surface **54***a*, a back surface **54***b*, a first end surface **54***c*, and a second end surface **54***d*.

[0179] The other configurations of the light source device **30**H are the same as those of the light source device **30**G of the seventh embodiment.

Effects of Eighth Embodiment

[0180] In the embodiment, the same effects as those of the first embodiment can be obtained. That is, the yellow fluorescence Y and the blue fluorescence B propagate through the light guide portion **78**, and thereby, the light source device **30**H with the smaller loss of the yellow fluorescence Y and the blue fluorescence B and the higher use efficiency of the yellow fluorescence Y and the blue fluorescence B can be realized and the light source device **30**H that can efficiently emit the white light LW can be realized.

[0181] Further, the same effects as those of the fifth embodiment can be obtained. That is, the yellow fluorescence Y and the blue fluorescence B are mainly emitted from the light guide portion **78**, and thereby, the color unevenness in the optical system downstream of the light source device **30**H can be suppressed. The respective wavelength conversion elements **51** and **52** can be efficiently cooled, and thereby, the higher wavelength conversion efficiency can be maintained.

[0182] Furthermore, in the embodiment, since the first wavelength conversion element **53** and the second wavelength conversion element **54** are formed using the phosphor having the light scattering property, the following effects can be obtained.

[0183] In the seventh embodiment shown in FIG. **12**, since the respective wavelength conversion elements **51** and **52** are formed using the transparent phosphor, scattering does not occur when the respective fluorescence Y and B propagates inside the respective wavelength conversion elements **51** and **52**, and the traveling directions of the respective fluorescence Y and B are not changed. Accordingly, the yellow fluorescence Y emitted from the first wavelength conversion element **51** and re-entering the first wavelength conversion element **51** is reflected by the first optical layer **61**, and then, re-emitted from the first wavelength conversion element **51**. Therefore, part of the yellow fluorescence Y is absorbed by the phosphor while propagating inside the first wavelength conversion element **51** and results in a loss.

[0184] On the other hand, in the embodiment, since the first wavelength conversion element **53** is formed using the phosphor having the light scattering property, when the yellow fluorescence Y enters the first wavelength conversion element **53**, a lot of scattering occurs and the traveling direction of the yellow fluorescence Y is changed at each time of scattering. Accordingly, as shown in FIG. **13**, for example, the yellow fluorescence Y**1** transmitted through the fourth optical layer **64** and entering the first wavelength conversion element **53** is scattered by the first wavelength conversion element **53** and changed in angle and emitted to the light-transmissive member **79**, propagates inside the light-transmissive member **79**, and then, is emitted from the region of the light-transmissive member **79** at the second end surface **53***d* side.

[0185] The blue fluorescence B exhibits the same behavior as the yellow fluorescence Y. For example, the blue fluorescence B**1** transmitted through the third optical layer **63** and entering the second wavelength conversion element **54** is scattered by the second wavelength conversion element **54** and changed in angle and emitted to the light-transmissive member **79**, propagates inside the light-transmissive member **79**, and then, is emitted from the region of the light-transmissive member **79** at the second end surface **54***d* side. As described above, in the embodiment, the yellow fluorescence Y and the blue fluorescence B propagating inside the first wavelength conversion element **53** and the second wavelength conversion element **54** is almost absent.

[0186] As described above, in the embodiment, the yellow fluorescence Y propagates through the light guide portion **78** while being repeatedly scattered by the first wavelength conversion element **53** and reflected by the third optical layer **63**, and is emitted from the region of the light guide portion **78** at the second end surface **53***d* side. The blue fluorescence B propagates through the light guide portion **78** while being repeatedly scattered by the second wavelength conversion element **54** and reflected by the fourth optical layer **64**, and is emitted from the region of the light guide portion **78** at the second end surface **54***d* side. As a result, the loss of the respective fluorescence Y and B propagating through the first wavelength conversion element **53** and the second wavelength conversion element **54** is suppressed, and thus, the use efficiency of the respective fluorescence Y and B can be further increased as compared with the seventh embodiment. According to the light source device **30**H of the embodiment, the highest wavelength conversion efficiency among all the embodiments can be obtained.

[0187] In the embodiment, the example in which the phosphor having the light scattering property is employed for the respective wavelength conversion elements **53** and **54** in the light source device **30**G of the seventh embodiment is shown, however, the phosphor having the light scattering property may be employed for the respective wavelength conversion elements in the light source devices **30**A to **30**F of the other embodiments.

[0188] Note that the technical scope of the present disclosure is not limited to the above described embodiments, but various changes can be made without departing from the scope of the present disclosure.

[0189] As the constituent material of the first wavelength conversion element, for example, composite phosphor containing AlN and Ce:YAG may be used. According to the configuration, even when the contact area between the first wavelength conversion element and the housing is too small to secure a large number of heat dissipation paths, the thermal conductivity of the first wavelength conversion element can be increased as compared with a case where phosphor of only Ce:YAG is used. Thereby, the cooling efficiency of the first wavelength conversion element can be increased. Accordingly, the maximum amount of the first excitation light can be increased, and the maximum output of the yellow fluorescence can be increased. Similarly, composite phosphor may be used for the second wavelength conversion element.

[0190] In the above described embodiments, the first wavelength range is, for example, the violet-to-blue wavelength range from 400 nm to 480 nm, and the third wavelength range is, for example, the ultraviolet wavelength range having the center wavelength of 380 nm, however, the wavelength ranges are not limited thereto. The first wavelength range may be, for example, a blue wavelength range from 430 nm to 480 nm, and the third wavelength range may be a violet wavelength range having a center wavelength of, for example, 400 nm.

[0191] In addition, the specific description of the shapes, the numbers, the arrangements, the materials, and the like of the respective component elements of the light source device and the projector are not limited to those in the above described embodiments, but changes can be made as appropriate. Further, in the above described embodiments, the example in which the light source device according to the present disclosure is provided in the projector using the liquid crystal panels is shown, however, the application is not limited to that. The light source device according to the present disclosure may be applied to a projector using digital micromirror devices as the light modulation devices. Further, the projector does not necessarily have the plurality of light modulation devices, but may have a single light modulation device.

[0192] In the above described embodiments, the example in which the light source device according to the present disclosure is applied to the projector is shown, however, the application is not limited to that. The light source device according to the present disclosure may be applied to a lighting apparatus, a headlight of an automobile, or the like.

Summary of Present Disclosure

[0193] The summary of the present disclosure is appended as below.

Appendix 1

[0194] A light source device includes a first light source emitting a first light in a first wavelength range, a first wavelength conversion element converting the first light into a second light in a second wavelength range different from the first wavelength range, a first optical layer disposed between the first light source and the first wavelength conversion element and transmitting the first light and reflecting the second light, a first light guide portion disposed between the first optical layer and the first wavelength conversion element and guiding the second light converted by the first wavelength conversion element, a second light source emitting a third light in a third wavelength range, a second wavelength conversion element converting the third light into a fourth light in a fourth wavelength range different from the third wavelength range or the second wavelength range, a second optical layer disposed between the second light source and the second wavelength conversion element and transmitting the third light and reflecting the fourth light, a second light guide portion disposed between the second optical layer and the second wavelength conversion element and guiding the fourth light converted by the second wavelength conversion element, and a first reflection member reflecting the first light, the second light, the third light, and the fourth light, wherein the first wavelength conversion element includes a first surface entered by the first light via the first optical layer and the first light guide portion, and a second surface and a third surface crossing the first surface and facing opposite sides to each other, the second wavelength conversion element includes a fourth surface entered by the third light via the second optical layer and the second light guide portion, and a fifth surface and a sixth surface crossing the fourth surface and facing opposite sides to each other, the first reflection member is disposed in a region at the second surface side of the first light guide portion and a region at the fifth surface side of the second light guide portion, the second wavelength conversion element is disposed at a side opposite to the first light source with respect to the first wavelength conversion element, the second light converted by the first wavelength conversion element travels through the first light guide portion and is emitted from a region of the first light guide portion at the third surface side, and the fourth light converted by the second wavelength conversion element travels through the second light guide portion and is emitted from a region of the second light guide portion at the sixth surface side.

[0195] According to the configuration of Appendix 1, the second light propagates through the first light guide portion and the fourth light propagates through the second light guide portion, and thereby, the light source device with the smaller loss of the second light and the fourth light and the higher use efficiency of the second light and the fourth light can be realized. Further, the light source device that can efficiently emit a combined light formed by combination of the second light and the fourth light can be realized.

Appendix 2

[0196] In the light source device according to Appendix 1, the first wavelength conversion element is joined to the second wavelength conversion element.

[0197] According to the configuration of Appendix 2, the first wavelength conversion element and the second wavelength conversion element can be handled as an integrated member, and thereby, the manufacturing process of the light source device can be made easier.

Appendix 3

[0198] In the light source device according to Appendix 1, an air layer is disposed between the first wavelength conversion element and the second wavelength conversion element.

[0199] According to the configuration of Appendix 3, it is easier for the light converted by one wavelength conversion element to be totally reflected at the interface between the wavelength conversion element and the air layer and harder

to enter the other wavelength conversion element. Therefore, absorption when the light converted by one wavelength conversion element enters the other wavelength conversion element is suppressed, and a decrease in wavelength conversion efficiency can be suppressed.

Appendix 4

[0200] In the light source device according to Appendix 1, a second reflection member reflecting the first light, the second light, the third light, and the fourth light is disposed between the first wavelength conversion element and the second wavelength conversion element.

[0201] According to the configuration of Appendix 4, since the light converted by one wavelength conversion element is reflected by the second reflection member, the light does not enter the other wavelength conversion element. Thereby, absorption when the light converted by one wavelength conversion element enters the other wavelength conversion element is suppressed, and a decrease in wavelength conversion efficiency can be suppressed.

Appendix 5

[0202] In the light source device according to Appendix 1, a scattering layer that reflects an incident light and changes an emission angle of the light is disposed between the first wavelength conversion element and the second wavelength conversion element.

[0203] According to the configuration of Appendix 5, since the light converted by one wavelength conversion element is reflected by the scattering layer and the emission angle is changed, entry of the light into the other wavelength conversion element can be suppressed. Thereby, absorption when the light converted by one wavelength conversion element enters the other wavelength conversion element is suppressed, and a decrease in wavelength conversion efficiency can be suppressed.

Appendix 6

[0204] The light source device according to any one of Appendices 1 to 5, further includes a third reflection member and a fourth reflection member reflecting the first light, the second light, the third light, and the fourth light, wherein the first wavelength conversion element has a seventh surface and an eighth surface crossing the first surface, the second surface, and the third surface and facing opposite sides to each other, the second wavelength conversion element includes a ninth surface and a tenth surface crossing the fourth surface, the fifth surface, and the sixth surface and facing opposite sides to each other, the third reflection member is disposed in a region at the seventh surface side of the first light guide portion and a region at the ninth surface side of the second light guide portion, and the fourth reflection member is disposed in a region at the eighth surface side of the first light guide portion and a region at the tenth surface side of the second light guide portion.

[0205] According to the configuration of Appendix 6, the conversion efficiency from the first light to the second light and the conversion efficiency from the third light to the fourth light can be increased by the third reflection member and the fourth reflection member. Further, a loss of the second light and the fourth light from the seventh surface, the eighth surface, the ninth surface, and the tenth surface can be suppressed.

Appendix 7

[0206] The light source device according to any one of Appendices 1 to 6, further includes a housing covering the first optical layer, the second optical layer, the first wavelength conversion element, and the second wavelength conversion element, wherein the housing has an extraction opening for extraction of the second light emitted from the region of the first light guide portion at the third surface side and the fourth light emitted from the region of the second light guide portion at the sixth surface side to the outside, and, in a plan view in a normal direction of the third surface of the first wavelength conversion element, the extraction opening overlaps with the first light guide portion, the first wavelength conversion element, the second light guide portion, and the second wavelength conversion element.

[0207] According to the configuration of Appendix 7, the first optical layer, the second optical layer, the first wavelength conversion element, and the second wavelength conversion element can be protected by the housing, and the second light propagating through the first light guide portion and the first wavelength conversion element and the fourth light propagating through the second light guide portion and the second wavelength conversion element can be extracted to the outside through the extraction opening of the housing.

Appendix 8

[0208] In the light source device according to any one of Appendices 1 to 7, the first wavelength conversion element and the second wavelength conversion element are formed using transparent phosphor.

[0209] According to the configuration of Appendix 8, even when the first wavelength conversion element and the second wavelength conversion element formed using the transparent phosphor are used, the amount of the incident first light and third light is increased without upsizing of the respective wavelength conversion elements, and thereby, the second light and the fourth light can be efficiently extracted to the outside with the increased conversion efficiency of the second light and the fourth light.

Appendix 9

[0210] In the light source device according to any one of Appendices 1 to 7, the first wavelength conversion element and the second wavelength conversion element are formed using phosphor having a light scattering property.

[0211] According to the configuration of Appendix 9, the second light generated inside the first wavelength conversion element is efficiently emitted to the first light guide portion and propagates through the first light guide portion, and thereby, a loss of the second light can be suppressed and extraction efficiency of the second light can be further increased. Further, the fourth light generated inside the second wavelength conversion element is efficiently emitted to the second light guide portion and propagates through the second light guide portion, and thereby, the extraction efficiency of the fourth light can be further increased.

Appendix 10

[0212] In the light source device according to Appendix 9, the first wavelength conversion element contains yellow phosphor, the first light is a blue light, the second light is yellow fluorescence, the second wavelength conversion ele-

ment contains blue phosphor, the third light is a ultraviolet light, the fourth light is blue fluorescence, the yellow fluorescence propagates through the first light guide portion while being repeatedly scattered by the first wavelength conversion element and reflected by the first optical layer, and is emitted from the region of the first light guide portion at the third surface side, and the blue fluorescence propagates through the second light guide portion while being repeatedly scattered by the second wavelength conversion element and reflected by the second optical layer, and is emitted from the region of the second light guide portion on the sixth surface side.

[0213] According to the configuration of Appendix 10, the yellow fluorescence generated inside the first wavelength conversion element can be efficiently extracted to the outside from the region of the first light guide portion at the third surface side. Further, the blue fluorescence generated inside the second wavelength conversion element can be efficiently extracted to the outside from the region of the second light guide portion at the sixth surface side.

Appendix 11

[0214] A light source device includes a first light source emitting a first light in a first wavelength range, a first wavelength conversion element converting the first light into a second light in a second wavelength range different from the first wavelength range, a first optical layer disposed between the first light source and the first wavelength conversion element and transmitting the first light and reflecting the second light, a second light source emitting a third light in a third wavelength range, a second wavelength conversion element converting the third light into a fourth light in a fourth wavelength range different from the third wavelength range or the second wavelength range, a second optical layer disposed between the second light source and the second wavelength conversion element and transmitting the third light and reflecting the fourth light, a light guide portion disposed between the first wavelength conversion element and the second wavelength conversion element, and guiding the second light converted by the first wavelength conversion element and guiding the fourth light converted by the second wavelength conversion element, and a first reflection member reflecting the first light, the second light, the third light, and the fourth light, wherein the first wavelength conversion element includes a first surface entered by the first light via the first optical layer, and a second surface and a third surface crossing the first surface and facing opposite sides to each other, the second wavelength conversion element includes a fourth surface entered by the third light via the second optical layer, and a fifth surface and a sixth surface crossing the fourth surface and facing opposite sides to each other, the second wavelength conversion element is disposed at a side opposite to the first light source with respect to the first wavelength conversion element, the first reflection member is disposed in a region at the second surface side of the light guide portion, and the second light converted by the first wavelength conversion element and the fourth light converted by the second wavelength conversion element travel through the light guide portion and are emitted from a region of the light guide portion at the third surface side.

[0215] According to the configuration of Appendix 11, the second light and the fourth light propagate through the light guide portion, and thereby, the light source device with the smaller loss of the second light and the fourth light and the higher use efficiency of the second light and the fourth can be realized. Further, the light source device that can efficiently emit a combined light formed by combination of the second light and the fourth light can be realized.

Appendix 12

[0216] In the light source device according to Appendix 11, the light guide portion is an air layer, and the second light converted by the first wavelength conversion element and the fourth light converted by the second wavelength conversion element travel through the air layer and are emitted from a region of the air layer at the third surface side.

[0217] According to the configuration of Appendix 12, as compared to a configuration in which the second light and the fourth light enter the light-transmissive member, the lights travel in a direction forming a smaller angle with respect to the longitudinal direction of the first wavelength conversion element and the second wavelength conversion element. As a result, when the second light reaches an interface between the air layer and another substance, it is easier for the light to be totally reflected and harder to leak to the outside. Thereby, the extraction efficiency of the second light and the fourth light can be increased.

Appendix 13

[0218] The light source device according to Appendix 12, further includes a housing covering the first optical layer, the second optical layer, the first wavelength conversion element, and the second wavelength conversion element, wherein the housing has an extraction opening for extraction of the second light and the fourth light emitted from the region of the light guide portion at the third surface side to the outside, and, in a plan view in a normal direction of the third surface of the first wavelength conversion element, the extraction opening overlaps with the first wavelength conversion element, the light guide portion, and the second wavelength conversion element.

[0219] According to the configuration of Appendix 13, the first optical layer, the second optical layer, the first wavelength conversion element, and the second wavelength conversion element can be protected by the housing, and the second light propagating through the light guide portion and the first wavelength conversion element and the fourth light propagating through the light guide portion and the second wavelength conversion element can be extracted to the outside through the extraction opening of the housing.

Appendix 14

[0220] In the light source device according to Appendix 11, a light-transmissive member that transmits the first light, the second light, the third light, and the fourth light is disposed in the light guide portion, and the second light converted by the first wavelength conversion element and the fourth light converted by the second wavelength conversion element travel inside the light-transmissive member and are emitted from an end surface of the light-transmissive member at the third surface side.

[0221] According to the configuration of Appendix 14, since the light-transmissive member is disposed in the light guide portion, the differences in refractive index between the respective wavelength conversion elements and the light guide portion are smaller and the critical angles at the

interfaces between the respective wavelength conversion elements and the light guide portion are smaller than those of the configuration in which the light guide portion includes the air layer. Thereby, the second light and the fourth light generated in the respective wavelength conversion elements can be easily extracted to the light guide portion, and a loss due to reabsorption of the second light and the fourth light can be suppressed.

Appendix 15

[0222] The light source device according to Appendix 14, further includes a third optical layer disposed between the light-transmissive member and the second wavelength conversion element, and transmitting the first light and the fourth light and reflecting the second light, and a fourth optical layer disposed between the light-transmissive member and the first wavelength conversion element, and transmitting the second light and reflecting the first light and the fourth light.

[0223] According to the configuration of Appendix 15, the second light traveling toward the second wavelength conversion element is reflected by the third optical layer, and is not entered into or absorbed by the second wavelength conversion element. Further, the first light and the fourth light traveling toward the first wavelength conversion element are reflected by the fourth optical layer, and is not entered into or absorbed by the first wavelength conversion element. Accordingly, both absorption of the second light entering the second wavelength conversion element and absorption of the fourth light entering the first wavelength conversion element are suppressed, and thereby, the wavelength conversion efficiency can be increased.

Appendix 16

[0224] The light source device according to Appendix 14, further includes a housing covering the first optical layer, the second optical layer, the first wavelength conversion element, and the second wavelength conversion element, wherein the housing has an extraction opening for extraction of the second light and the fourth light emitted from the region of the light guide portion at the third surface side to the outside, and, in a plan view in a normal direction of the third surface of the first wavelength conversion element, the extraction opening overlaps with the first wavelength conversion element, the light-transmissive member, and the second wavelength conversion element.

[0225] According to the configuration of Appendix 16, the first optical layer, the second optical layer, the first wavelength conversion element, and the second wavelength conversion element can be protected by the housing, and the second light propagating through the light-transmissive member and the first wavelength conversion element and the fourth light propagating through the light-transmissive member and the second wavelength conversion element can be extracted to the outside through the extraction opening of the housing.

Appendix 17

[0226] The light source device according to any one of Appendices 11 to 16, further includes a third reflection member and a fourth reflection member reflecting the first light, the second light, the third light, and the fourth light, wherein the first wavelength conversion element includes a seventh surface and an eighth surface crossing the first surface, the second surface, and the third surface and facing opposite sides to each other, the third reflection member is disposed in a region at the seventh surface side of the light guide portion, and the fourth reflection member is disposed in a region at the eighth surface side of the light guide portion.

[0227] According to the configuration of Appendix 17, the conversion efficiency from the first light to the second light and the conversion efficiency from the third light to the fourth light can be increased by the third reflection member and the fourth reflection member. Further, a loss of the second light and the fourth light from the seventh surface, the eighth surface, the ninth surface, and the tenth surface can be suppressed.

Appendix 18

[0228] In the light source device according to any one of Appendices 11 to 17, the first wavelength conversion element and the second wavelength conversion element are formed using transparent phosphor.

[0229] According to the configuration of Appendix 18, even when the first wavelength conversion element and the second wavelength conversion element formed using the transparent phosphor are used, the amount of the incident first light and third light is increased without upsizing of the respective wavelength conversion elements, and thereby, the second light and the fourth light can be efficiently extracted to the outside with the increased conversion efficiency of the second light and the fourth light.

Appendix 19

[0230] In the light source device according to any one of Appendices 11 to 17, the first wavelength conversion element and the second wavelength conversion element are formed using phosphor having a light scattering property.

[0231] According to the configuration of Appendix 19, the second light generated inside the first wavelength conversion element is efficiently emitted to the light guide portion and propagates through the light guide portion, and thereby, a loss of the second light can be suppressed and the extraction efficiency of the second light can be further increased. Further, the fourth light generated inside the second wavelength conversion element is efficiently emitted to the light guide portion and propagates through the light guide portion, and thereby, a loss of the fourth light can be suppressed and the extraction efficiency of the fourth light can be further increased.

Appendix 20

[0232] In the light source device according to Appendix 19, the first wavelength conversion element contains yellow phosphor, the first light is a blue light, the second light is yellow fluorescence, the second wavelength conversion element contains blue phosphor, the third light is an ultraviolet light, the fourth light is blue fluorescence, the second optical layer reflects the second light, the yellow fluorescence propagates through the light guide portion while being repeatedly scattered by the first wavelength conversion element and reflected by the second optical layer, and is emitted from the region of the light guide portion at the third surface side, and the blue fluorescence propagates through the light guide portion while being repeatedly scattered by

the second wavelength conversion element and scattered by the first wavelength conversion element, and is emitted from the region of the light guide portion at the third surface side.

[0233] According to the configuration of Appendix 20, the yellow fluorescence generated inside the first wavelength conversion element can be efficiently extracted to the outside from the region of the light guide portion at the third surface side. Further, the blue fluorescence generated inside the second wavelength conversion element can be efficiently extracted to the outside from the region of the light guide portion at the third surface side.

Appendix 21

[0234] A projector includes the light source device according to any one of Appendices 1 to 10, a light modulation device modulating a light emitted from the light source device, and a projection optical device projecting the light modulated by the light modulation device.

[0235] According to the configuration of Appendix 21, since the light source device emits a combined light formed by combination of the second light and the fourth light, with only one light source device, the projector having the highly efficient and simple configuration can be realized.

Appendix 22

[0236] A projector includes the light source device according to any one of Appendices 11 to 20, a light modulation device modulating a light emitted from the light source device, and a projection optical device projecting the light modulated by the light modulation device.

[0237] According to the configuration of Appendix 22, since the light source device emits a combined light formed by combination of the second light and the fourth light, with only one light source device, the projector having the highly efficient and simple configuration can be realized.

What is claimed is:

1. A light source device comprising:

a first light source emitting a first light in a first wavelength range;

a first wavelength conversion element converting the first light into a second light in a second wavelength range different from the first wavelength range;

a first optical layer disposed between the first light source and the first wavelength conversion element and transmitting the first light and reflecting the second light;

a first light guide portion disposed between the first optical layer and the first wavelength conversion element and guiding the second light converted by the first wavelength conversion element;

a second light source emitting a third light in a third wavelength range;

a second wavelength conversion element converting the third light into a fourth light in a fourth wavelength range different from the third wavelength range or the second wavelength range;

a second optical layer disposed between the second light source and the second wavelength conversion element and transmitting the third light and reflecting the fourth light;

a second light guide portion disposed between the second optical layer and the second wavelength conversion element and guiding the fourth light converted by the second wavelength conversion element; and

a first reflection member reflecting the first light, the second light, the third light, and the fourth light, wherein

the first wavelength conversion element includes a first surface entered by the first light via the first optical layer and the first light guide portion, and a second surface and a third surface crossing the first surface and facing opposite sides to each other,

the second wavelength conversion element includes a fourth surface entered by the third light via the second optical layer and the second light guide portion, and a fifth surface and a sixth surface crossing the fourth surface and facing opposite sides to each other,

the first reflection member is disposed in a region at the second surface side of the first light guide portion and a region at the fifth surface side of the second light guide portion,

the second wavelength conversion element is disposed at a side opposite to the first light source with respect to the first wavelength conversion element,

the second light converted by the first wavelength conversion element travels through the first light guide portion and is emitted from a region of the first light guide portion at the third surface side, and

the fourth light converted by the second wavelength conversion element travels through the second light guide portion and is emitted from a region of the second light guide portion at the sixth surface side.

2. The light source device according to claim **1**, wherein

the first wavelength conversion element is joined to the second wavelength conversion element.

3. The light source device according to claim **1**, wherein

an air layer is disposed between the first wavelength conversion element and the second wavelength conversion element.

4. The light source device according to claim **1**, wherein

a second reflection member reflecting the first light, the second light, the third light, and the fourth light is disposed between the first wavelength conversion element and the second wavelength conversion element.

5. The light source device according to claim **1**, wherein

a scattering layer that reflects an incident light and changes an emission angle of the light is disposed between the first wavelength conversion element and the second wavelength conversion element.

6. The light source device according to claim **1**, further comprising a third reflection member and a fourth reflection member reflecting the first light, the second light, the third light, and the fourth light, wherein

the first wavelength conversion element has a seventh surface and an eighth surface crossing the first surface, the second surface, and the third surface and facing opposite sides to each other,

the second wavelength conversion element includes a ninth surface and a tenth surface crossing the fourth surface, the fifth surface, and the sixth surface and facing opposite sides to each other,

the third reflection member is disposed in a region at the seventh surface side of the first light guide portion and a region at the ninth surface side of the second light guide portion, and

the fourth reflection member is disposed in a region at the eighth surface side of the first light guide portion and a region at the tenth surface side of the second light guide portion.

7. The light source device according to claim **1**, further comprising a housing covering the first optical layer, the second optical layer, the first wavelength conversion element, and the second wavelength conversion element, wherein

the housing has an extraction opening for extraction of the second light emitted from the region of the first light guide portion at the third surface side and the fourth light emitted from the region of the second light guide portion at the sixth surface side to the outside, and

in a plan view in a normal direction of the third surface of the first wavelength conversion element, the extraction opening overlaps with the first light guide portion, the first wavelength conversion element, the second light guide portion, and the second wavelength conversion element.

8. The light source device according to claim **1**, wherein

the first wavelength conversion element and the second wavelength conversion element are formed using transparent phosphor.

9. The light source device according to claim **1**, wherein

the first wavelength conversion element and the second wavelength conversion element are formed using phosphor having a light scattering property.

10. The light source device according to claim **9**, wherein

the first wavelength conversion element contains yellow phosphor,

the first light is a blue light,

the second light is yellow fluorescence,

the second wavelength conversion element contains blue phosphor,

the third light is an ultraviolet light,

the fourth light is blue fluorescence,

the yellow fluorescence propagates through the first light guide portion while being repeatedly scattered by the first wavelength conversion element and reflected by the first optical layer, and is emitted from the region of the first light guide portion at the third surface side, and

the blue fluorescence propagates through the second light guide portion while being repeatedly scattered by the second wavelength conversion element and reflected by the second optical layer, and is emitted from the region of the second light guide portion at the sixth surface side.

11. A light source device comprising:

a first light source emitting a first light in a first wavelength range;

a first wavelength conversion element converting the first light into a second light in a second wavelength range different from the first wavelength range;

a first optical layer disposed between the first light source and the first wavelength conversion element and transmitting the first light and reflecting the second light;

a second light source emitting a third light in a third wavelength range;

a second wavelength conversion element converting the third light into a fourth light in a fourth wavelength range different from the third wavelength range or the second wavelength range;

a second optical layer disposed between the second light source and the second wavelength conversion element and transmitting the third light and reflecting the fourth light;

a light guide portion disposed between the first wavelength conversion element and the second wavelength conversion element, and guiding the second light converted by the first wavelength conversion element and guiding the fourth light converted by the second wavelength conversion element; and

a first reflection member reflecting the first light, the second light, the third light, and the fourth light, wherein

the first wavelength conversion element includes a first surface entered by the first light via the first optical layer, and a second surface and a third surface crossing the first surface and facing opposite sides to each other,

the second wavelength conversion element includes a fourth surface entered by the third light via the second optical layer, and a fifth surface and a sixth surface crossing the fourth surface and facing opposite sides to each other,

the second wavelength conversion element is disposed at a side opposite to the first light source with respect to the first wavelength conversion element,

the first reflection member is disposed in a region at the second surface side of the light guide portion, and

the second light converted by the first wavelength conversion element and the fourth light converted by the second wavelength conversion element travel through the light guide portion and are emitted from a region of the light guide portion at the third surface side.

12. The light source device according to claim **11**, wherein

the light guide portion is an air layer, and

the second light converted by the first wavelength conversion element and the fourth light converted by the second wavelength conversion element travel through the air layer and are emitted from a region of the air layer at the third surface side.

13. The light source device according to claim **12**, further comprising a housing covering the first optical layer, the second optical layer, the first wavelength conversion element, and the second wavelength conversion element, wherein

the housing has an extraction opening for extraction of the second light and the fourth light emitted from the region of the light guide portion at the third surface side to the outside, and

in a plan view in a normal direction of the third surface of the first wavelength conversion element, the extraction opening overlaps with the first wavelength conversion element, the light guide portion, and the second wavelength conversion element.

14. The light source device according to claim **11**, wherein

a light-transmissive member that transmits the first light, the second light, the third light, and the fourth light is disposed in the light guide portion, and

the second light converted by the first wavelength conversion element and the fourth light converted by the second wavelength conversion element travel inside the light-transmissive member and are emitted from an end surface of the light-transmissive member at the third surface side.

15. The light source device according to claim **14**, further comprising:

a third optical layer disposed between the light-transmissive member and the second wavelength conversion element, and transmitting the first light and the fourth light and reflecting the second light; and

a fourth optical layer disposed between the light-transmissive member and the first wavelength conversion element, and transmitting the second light and reflecting the first light and the fourth light.

16. The light source device according to claim **14**, further comprising a housing covering the first optical layer, the second optical layer, the first wavelength conversion element, and the second wavelength conversion element, wherein

the housing has an extraction opening for extraction of the second light and the fourth light emitted from the region of the light guide portion at the third surface side to the outside, and

in a plan view in a normal direction of the third surface of the first wavelength conversion element, the extraction opening overlaps with the first wavelength conversion element, the light-transmissive member, and the second wavelength conversion element.

17. The light source device according to claim **11**, further comprising a third reflection member and a fourth reflection member reflecting the first light, the second light, the third light, and the fourth light, wherein

the first wavelength conversion element includes a seventh surface and an eighth surface crossing the first surface, the second surface, and the third surface and facing opposite sides to each other,

the third reflection member is disposed in a region at the seventh surface side of the light guide portion, and

the fourth reflection member is disposed in a region at the eighth surface side of the light guide portion.

18. The light source device according to claim **11**, wherein

the first wavelength conversion element and the second wavelength conversion element are formed using transparent phosphor.

19. The light source device according to claim **11**, wherein

the first wavelength conversion element and the second wavelength conversion element are formed using phosphor having a light scattering property.

20. The light source device according to claim **19**, wherein

the first wavelength conversion element contains yellow phosphor,

the first light is a blue light,

the second light is yellow fluorescence,

the second wavelength conversion element contains blue phosphor,

the third light is an ultraviolet light,

the fourth light is blue fluorescence,

the second optical layer reflects the second light,

the yellow fluorescence propagates through the light guide portion while being repeatedly scattered by the first wavelength conversion element and reflected by the second optical layer, and is emitted from the region of the light guide portion at the third surface side, and

the blue fluorescence propagates through the light guide portion while being repeatedly scattered by the second wavelength conversion element and scattered by the first wavelength conversion element, and is emitted from the region of the light guide portion at the third surface side.

21. A projector comprising:

the light source device according to claim **1**;

a light modulation device modulating a light emitted from the light source device; and

a projection optical device projecting the light modulated by the light modulation device.

22. A projector comprising:

the light source device according to claim **11**;

a light modulation device modulating a light emitted from the light source device; and

a projection optical device projecting the light modulated by the light modulation device.

* * * * *