US 20250274554A1

(19) United States
(12) Patent Application Publication
OKAMOTO et al.
(10) Pub. No.: US 2025/0274554 A1
(43) Pub. Date: Aug. 28, 2025

(54) **MULTIFUNCTION PRINTER**

(71) Applicant: **BROTHER KOGYO KABUSHIKI KAISHA**, Nagoya (JP)

(72) Inventors: **Yoshihiro OKAMOTO**, Komaki (JP); **Hiroaki SHIGENO**, Nagoya (JP)

(73) Assignee: **BROTHER KOGYO KABUSHIKI KAISHA**, Nagoya (JP)

(21) Appl. No.: **19/065,147**

(22) Filed: **Feb. 27, 2025**

(30) **Foreign Application Priority Data**

Feb. 28, 2024 (JP) 2024-028594

Publication Classification

(51) **Int. Cl.**

H04N 1/00	(2006.01)
B41J 3/46	(2006.01)
B41J 29/02	(2006.01)
B41J 29/13	(2006.01)
G03G 15/00	(2006.01)
G03G 15/22	(2006.01)
G03G 21/16	(2006.01)

(52) **U.S. Cl.**

CPC ***H04N 1/00557*** (2013.01); ***H04N 1/00559*** (2013.01); *B41J 3/46* (2013.01); *B41J 29/02* (2013.01); *B41J 29/13* (2013.01); *G03G 15/228* (2013.01); *G03G 15/5016* (2013.01); *G03G 15/80* (2013.01); *G03G 21/1619* (2013.01); *G03G 21/1633* (2013.01); *H04N 2201/0094* (2013.01)

(57) **ABSTRACT**

A multifunction printer includes an image forming unit configured to form an image on a sheet, an image reading unit configured to read an image of a document, an operation panel configured to receive an operation, a lower housing configured to house the image forming unit, an upper housing configured to house the image reading unit, the upper housing being located above the lower housing, a panel housing configured to house the operation panel, the panel housing being located above the lower housing and located in front of the upper housing, a connection part connecting the lower housing to the upper housing, and a support part configured to support the panel housing, the support part being located between the lower housing and the panel housing in an upward-and-downward direction, the support part being located in front of the upper housing and the connection part.

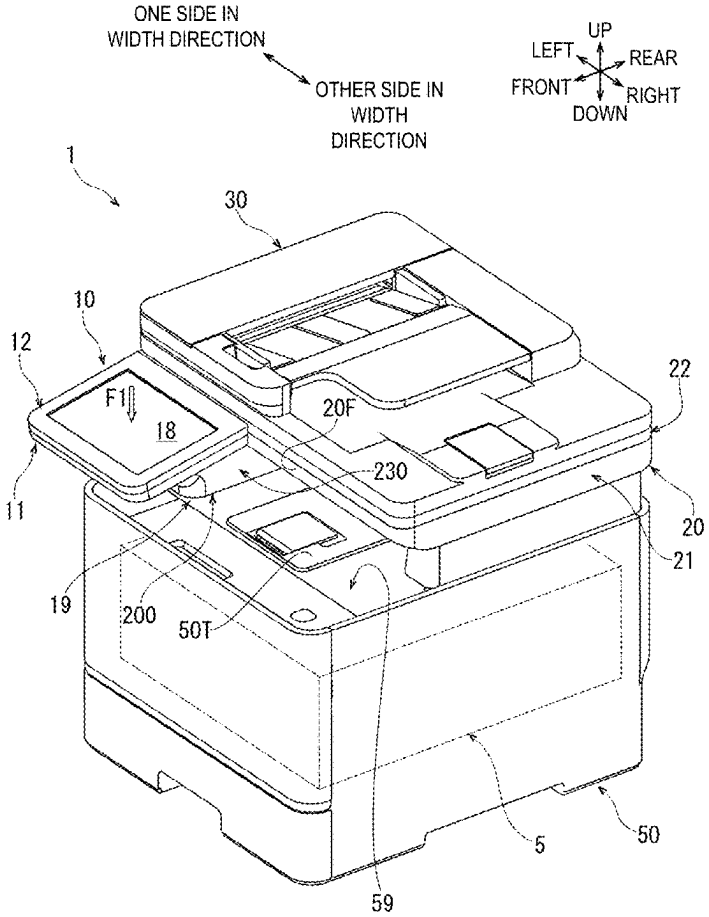

FIG. 1

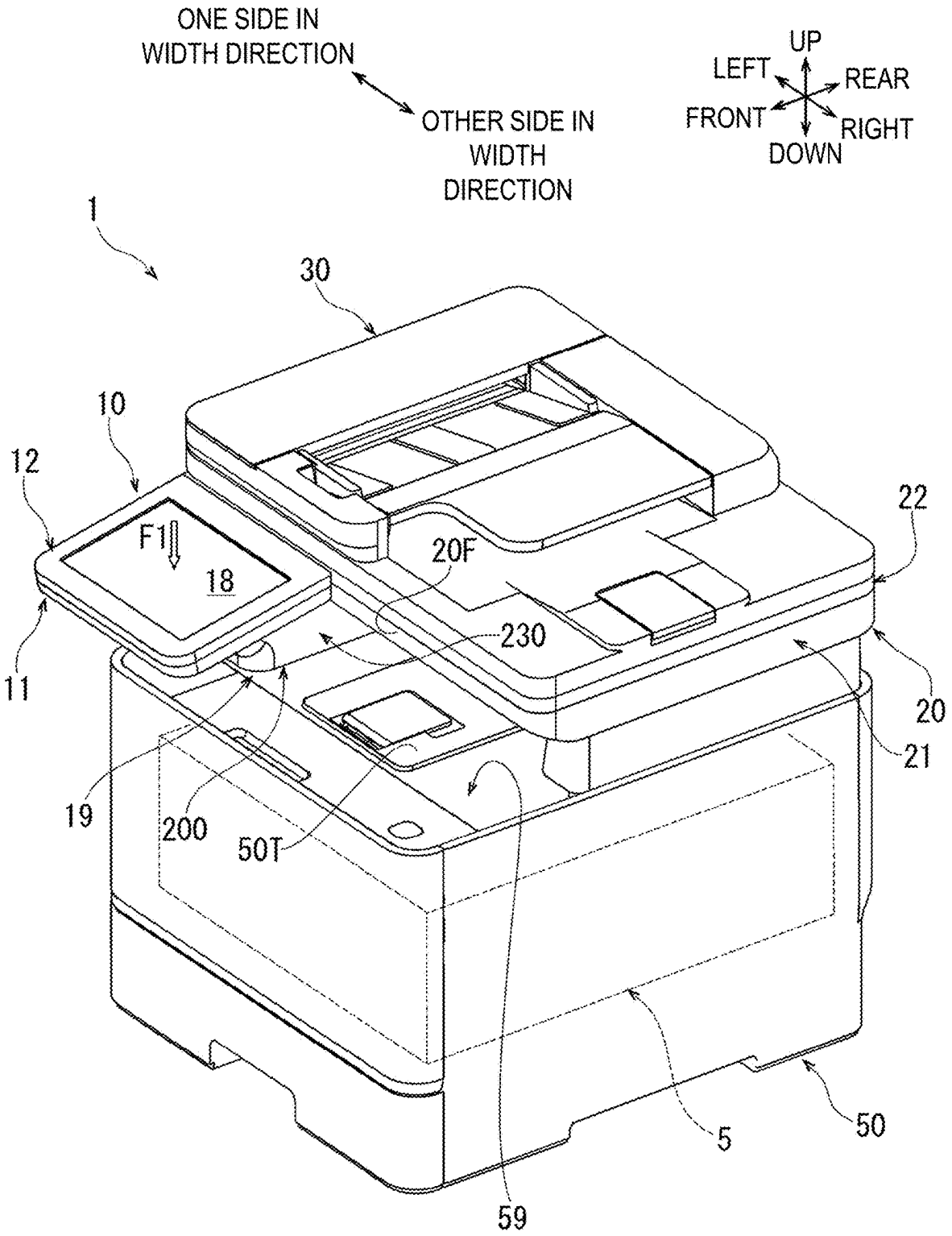
ONE SIDE IN WIDTH DIRECTION
OTHER SIDE IN WIDTH DIRECTION
UP
LEFT
REAR
FRONT
RIGHT
DOWN
1
30
10
12
F1
18
20F
22
230
11
20
21
19
200
50T
5
50
59

FIG. 2

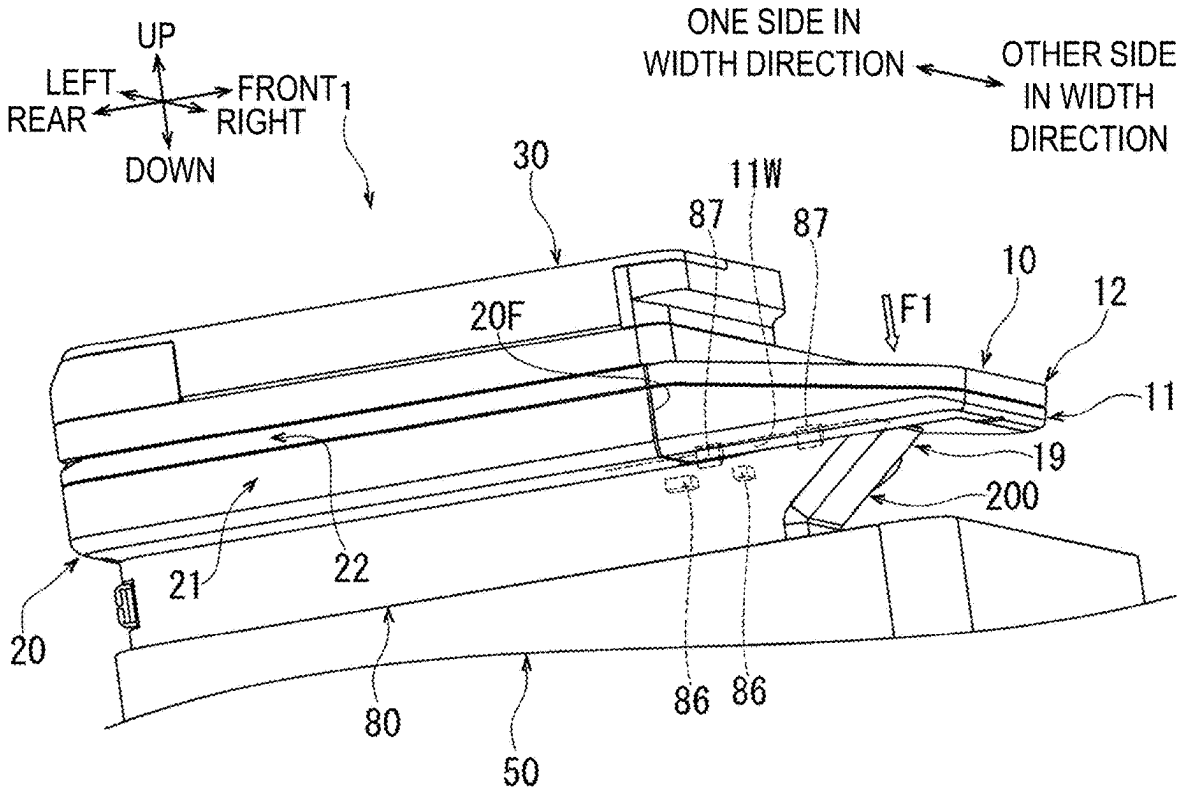
UP
LEFT
FRONT
REAR
RIGHT
DOWN
1
ONE SIDE IN WIDTH DIRECTION
OTHER SIDE IN WIDTH DIRECTION
30
11W
87
87
10
12
F1
20F
11
19
200
21
22
20
80
50
86
86

FIG. 3

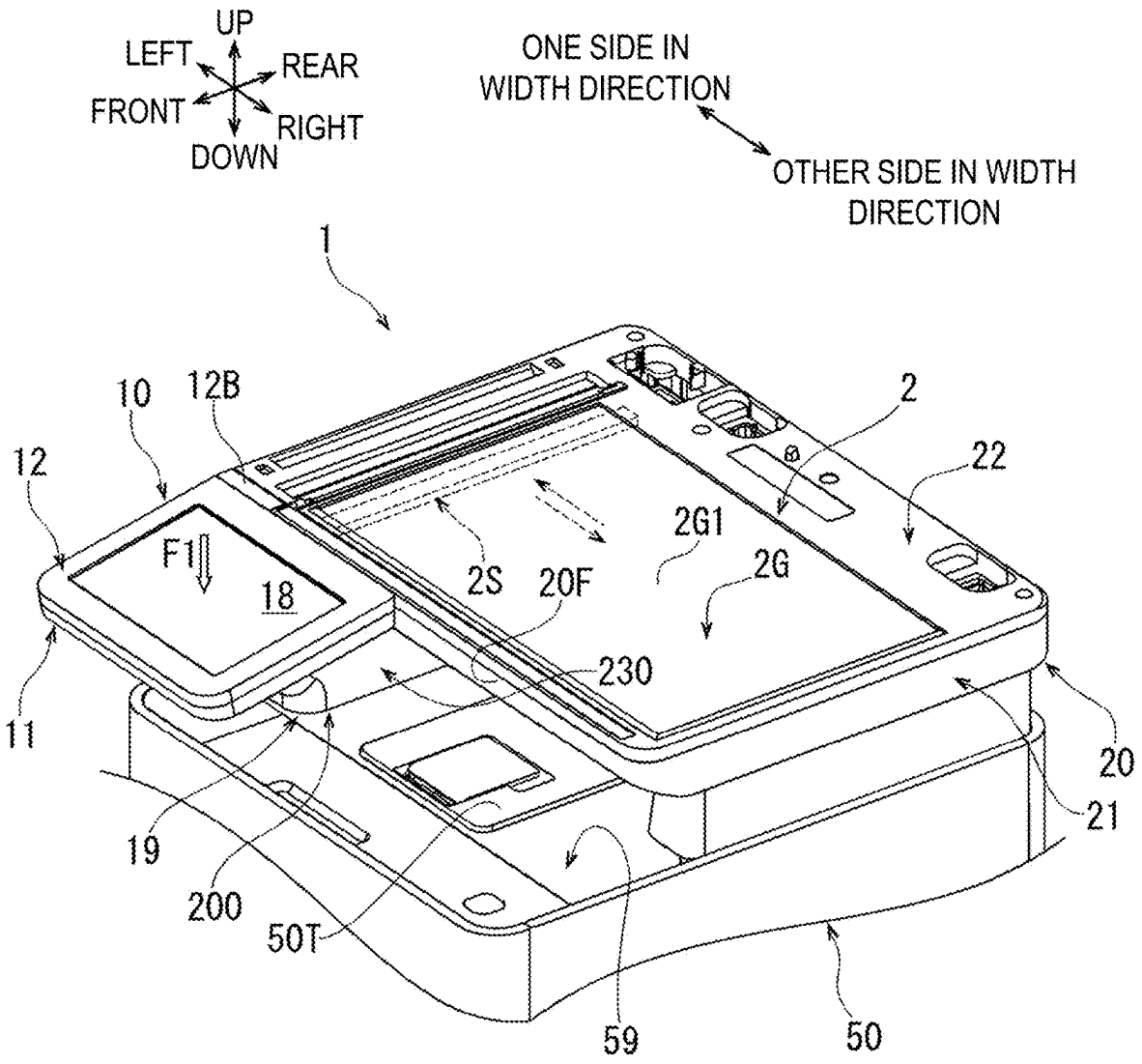
UP
LEFT
REAR
FRONT
RIGHT
DOWN
ONE SIDE IN WIDTH DIRECTION
OTHER SIDE IN WIDTH DIRECTION
1
10
12B
12
2
22
F1
18
2S
20F
2G1
2G
230
11
20
21
19
200
50T
59
50

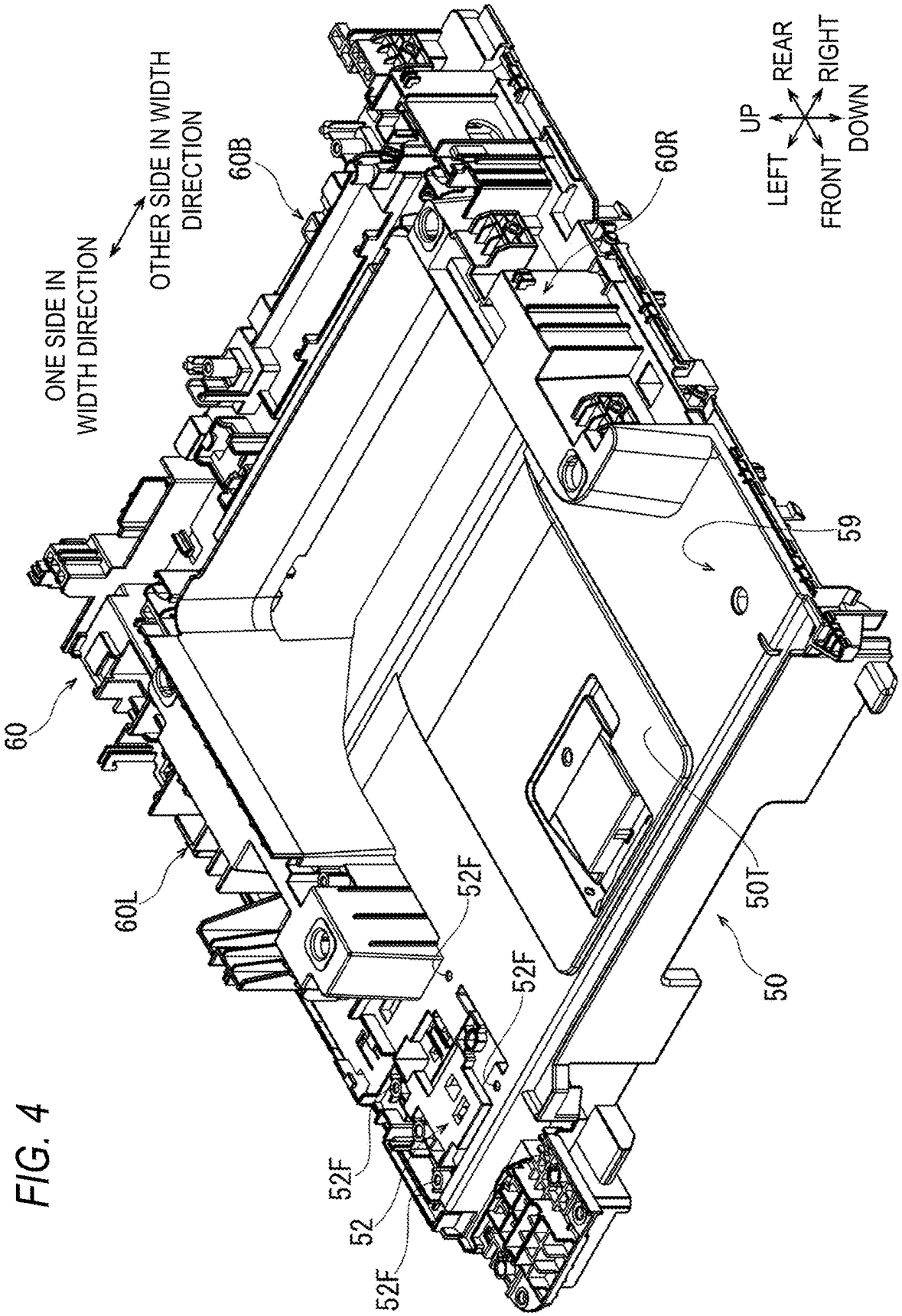
ONE SIDE IN WIDTH DIRECTION
OTHER SIDE IN WIDTH DIRECTION
60B
60R
UP
REAR
LEFT
RIGHT
FRONT
DOWN
59
60
60L
52F
52F
52F
52F
52
50T
50

FIG. 4

FIG. 5

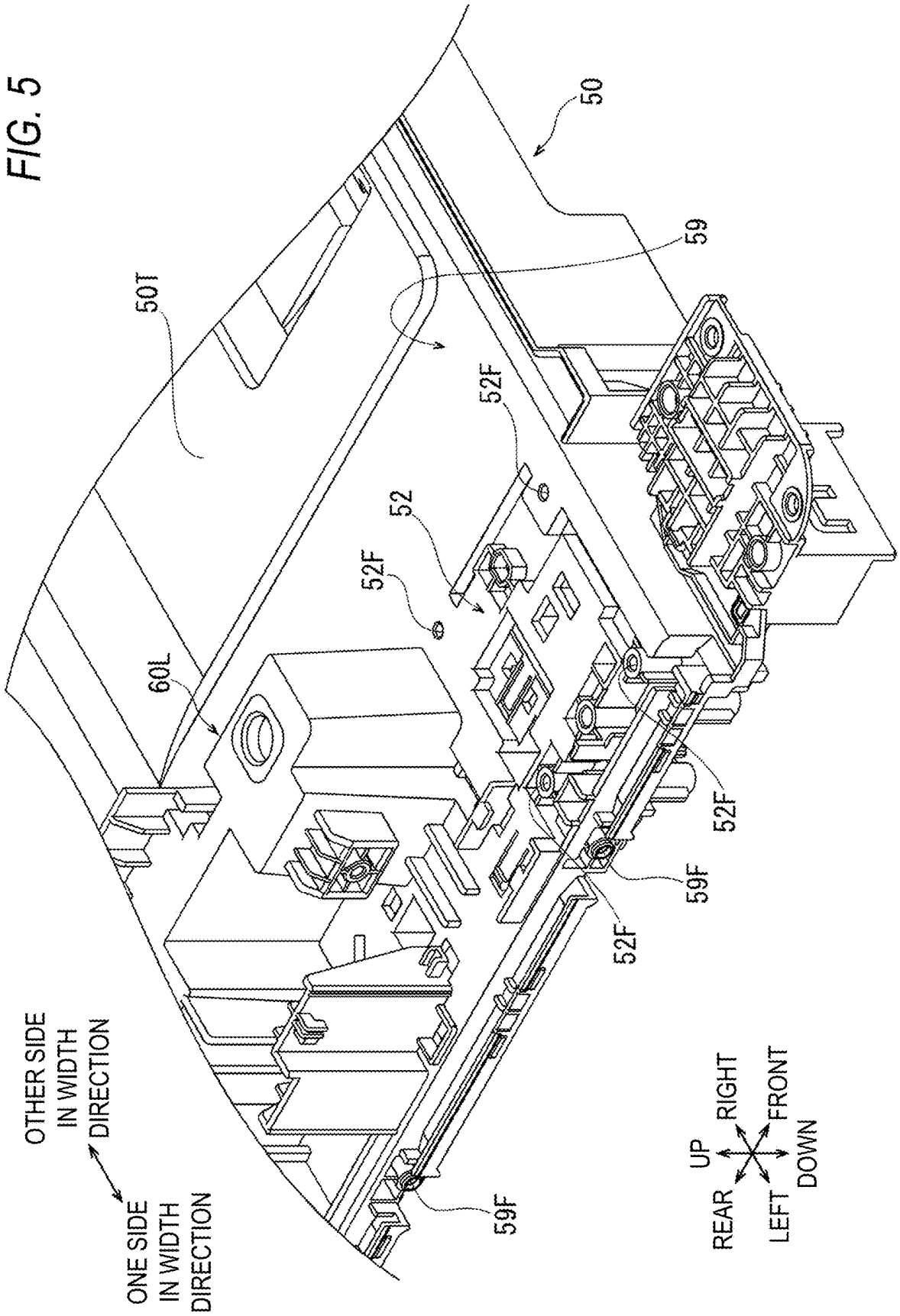
50
59
50T
52F
52
52F
60L
52F
59F
52F
59F
OTHER SIDE IN WIDTH DIRECTION
ONE SIDE IN WIDTH DIRECTION
UP
RIGHT
FRONT
REAR
LEFT
DOWN

FIG. 6

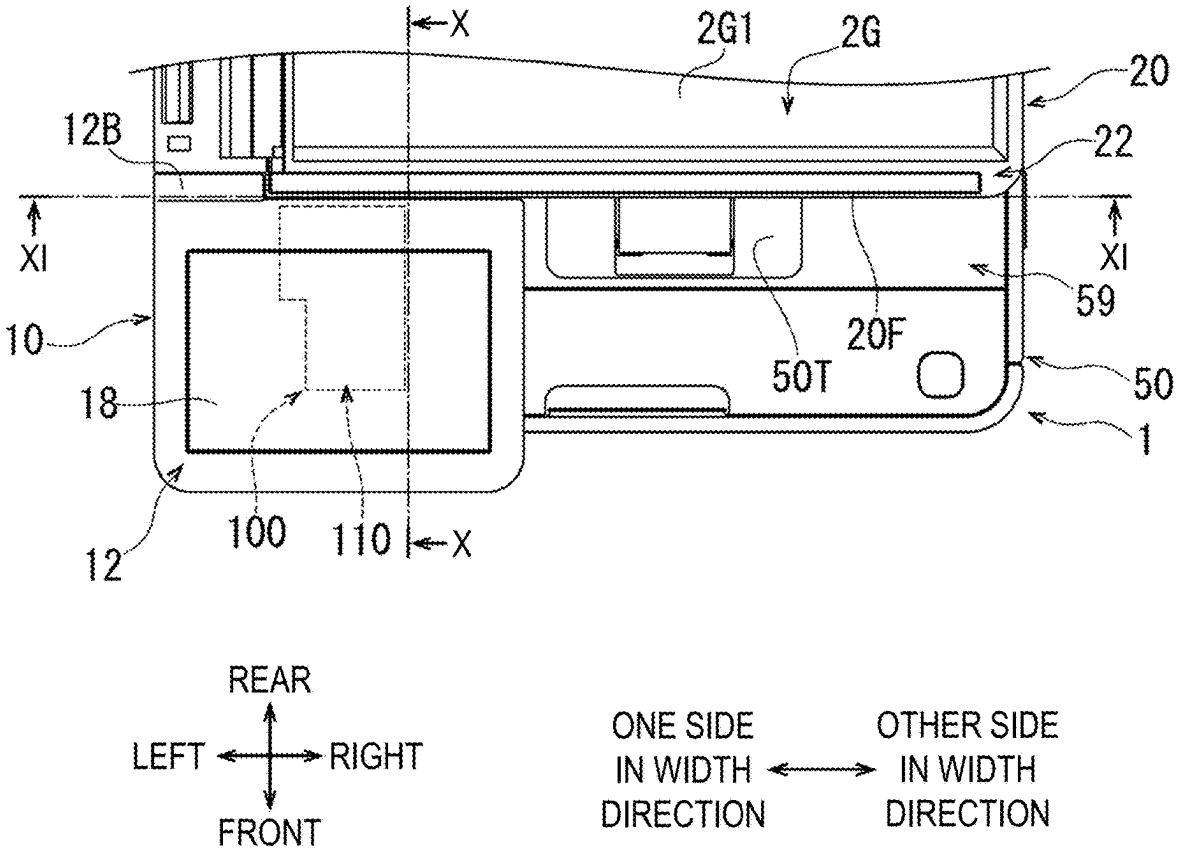
X
2G1
2G
20
12B
22
XI
XI
59
10
20F
50T
50
18
1
12
100
110
X
REAR
LEFT
RIGHT
FRONT
ONE SIDE IN WIDTH DIRECTION
OTHER SIDE IN WIDTH DIRECTION

FIG. 7

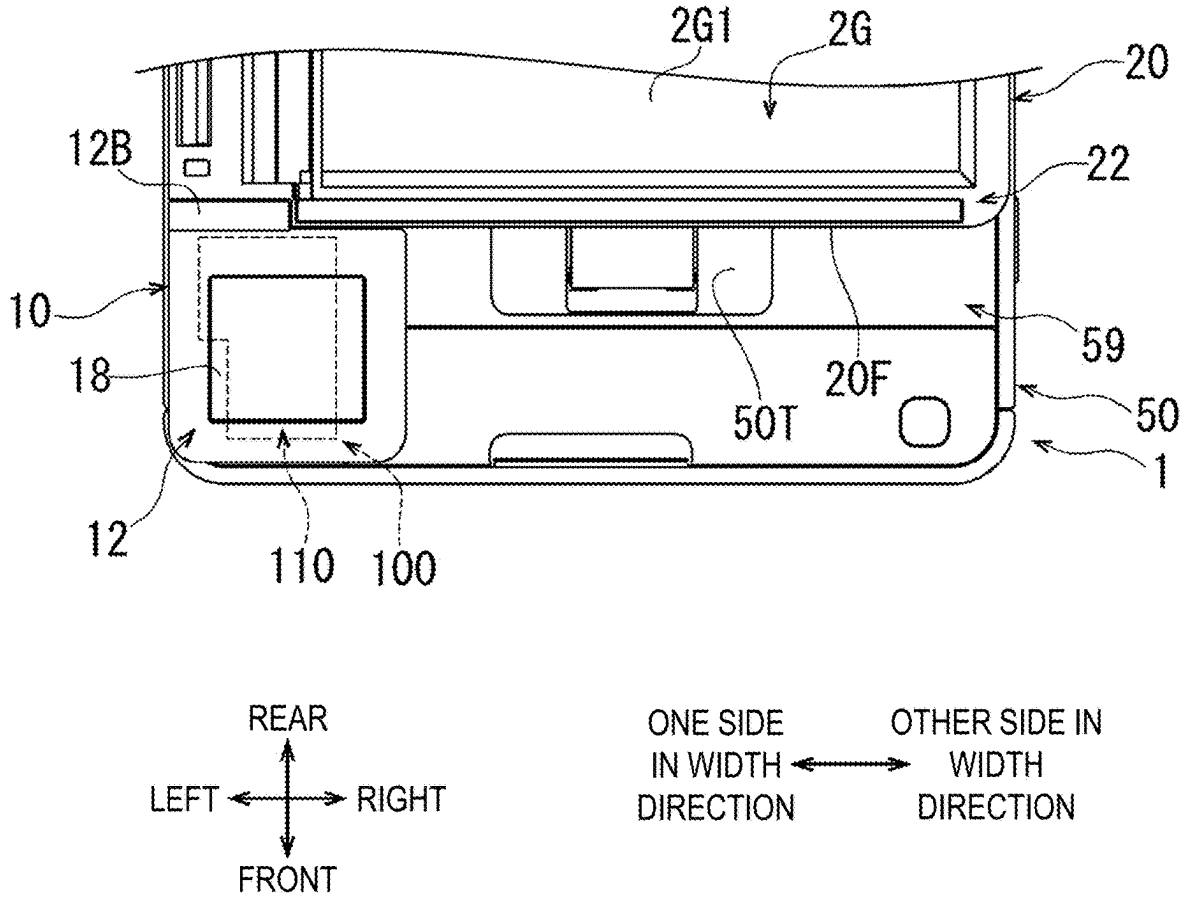
2G1
2G
20
12B
22
10
59
18
20F
50T
50
1
12
110
100
REAR
LEFT
RIGHT
FRONT
ONE SIDE IN WIDTH DIRECTION
OTHER SIDE IN WIDTH DIRECTION

FIG. 8

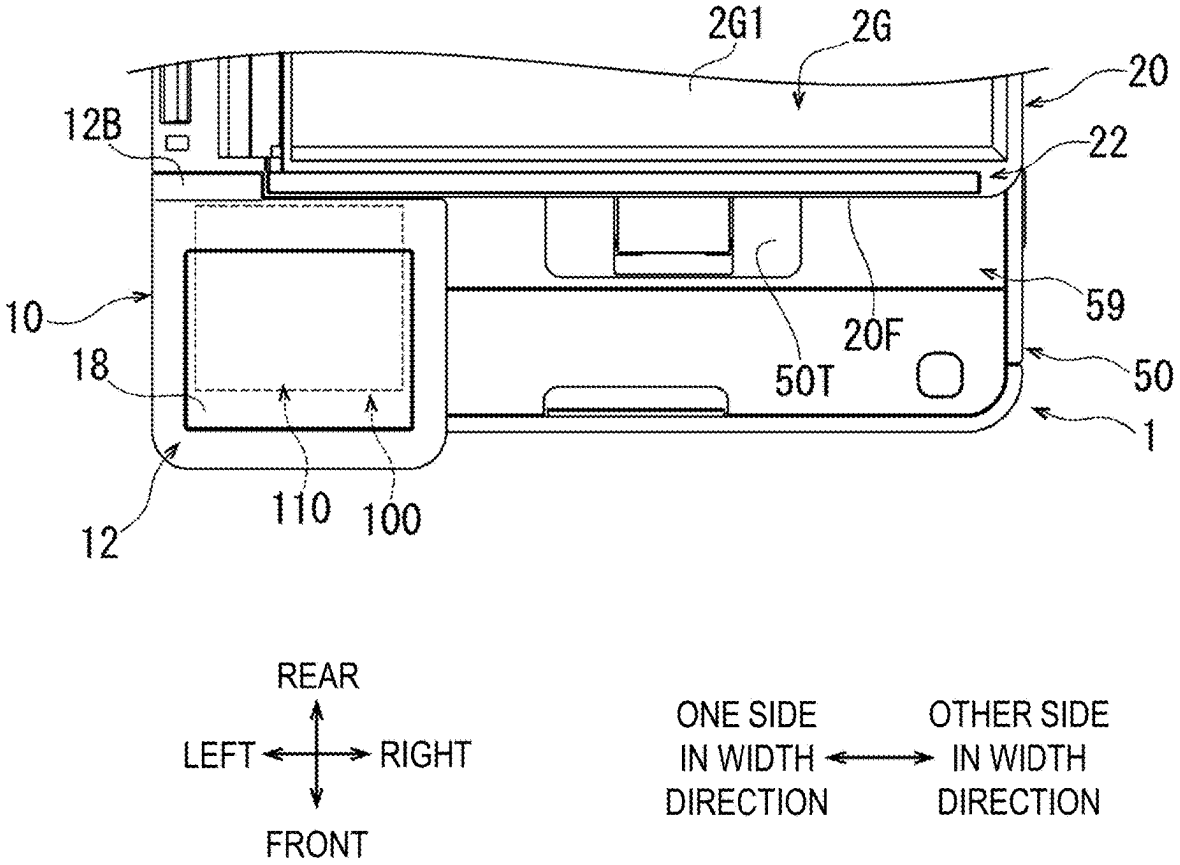
2G1
2G
20
12B
22
10
59
18
20F
50T
50
1
12
110
100
REAR
LEFT
RIGHT
FRONT
ONE SIDE IN WIDTH DIRECTION
OTHER SIDE IN WIDTH DIRECTION

FIG. 9

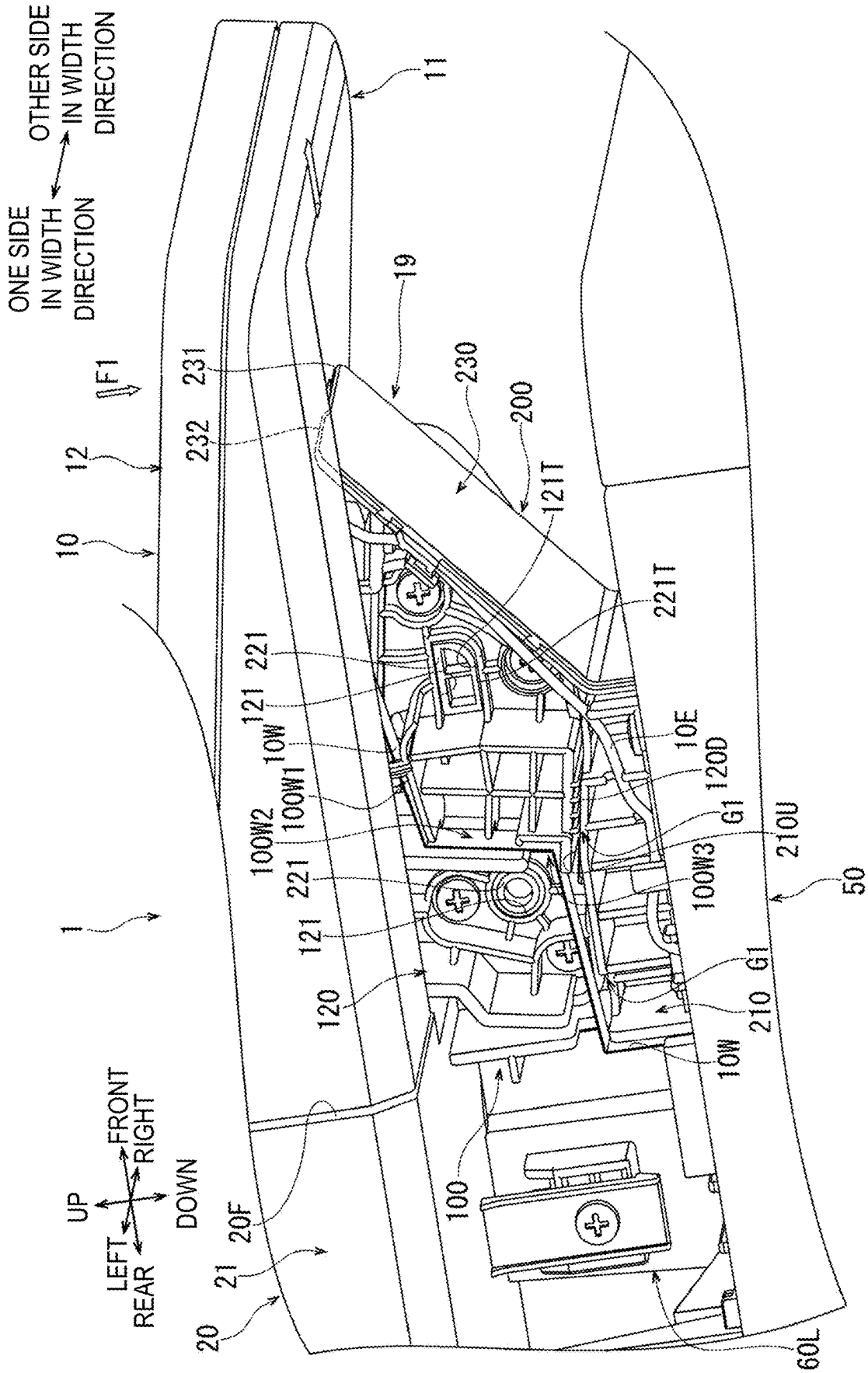
OTHER SIDE IN WIDTH DIRECTION
ONE SIDE IN WIDTH DIRECTION
F1
11
19
231
232
230
200
12
10
121T
221T
221
121
10W
100W1
100W2
10E
120D
G1
210U
100W3
50
1
120
210
G1
10W
100
20F
21
20
60L
UP
DOWN
FRONT
RIGHT
LEFT
REAR

FIG. 10

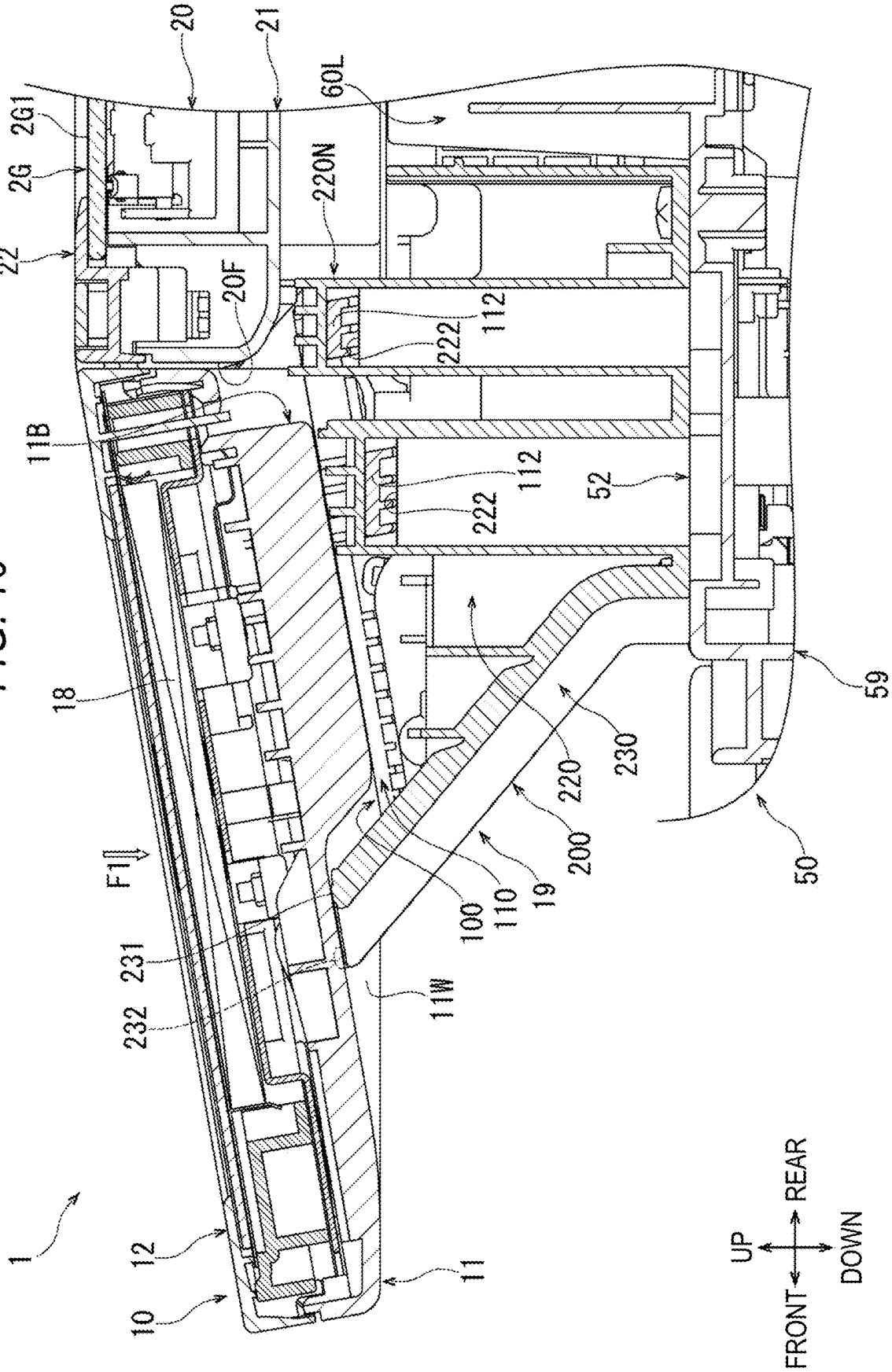
20
21
60L
2G1
2G
22
220N
20F
112
222
11B
112
222
52
18
59
230
220
200
19
110
100
50
F1
231
232
11W
1
12
10
11
UP
REAR
FRONT
DOWN

FIG. 11

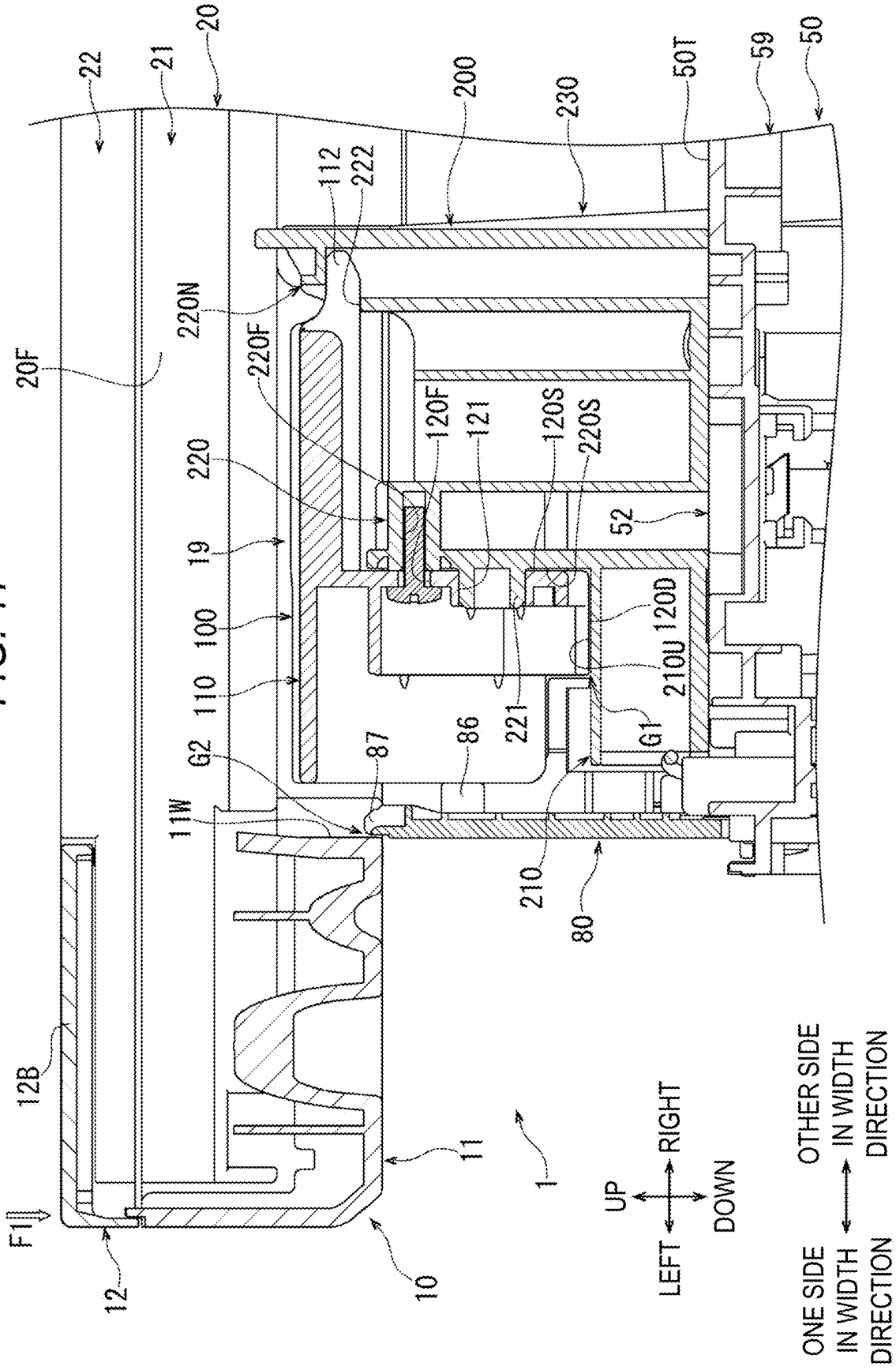
20
22
21
200
230
50T
59
50
112
222
220N
20F
220F
120F
121
120S
220S
220
52
19
100
120D
110
210U
221
G1
G2
87
86
11W
210
80
12B
11
1
12
10
F1
UP
DOWN
LEFT
RIGHT
ONE SIDE IN WIDTH DIRECTION
OTHER SIDE IN WIDTH DIRECTION

FIG. 12

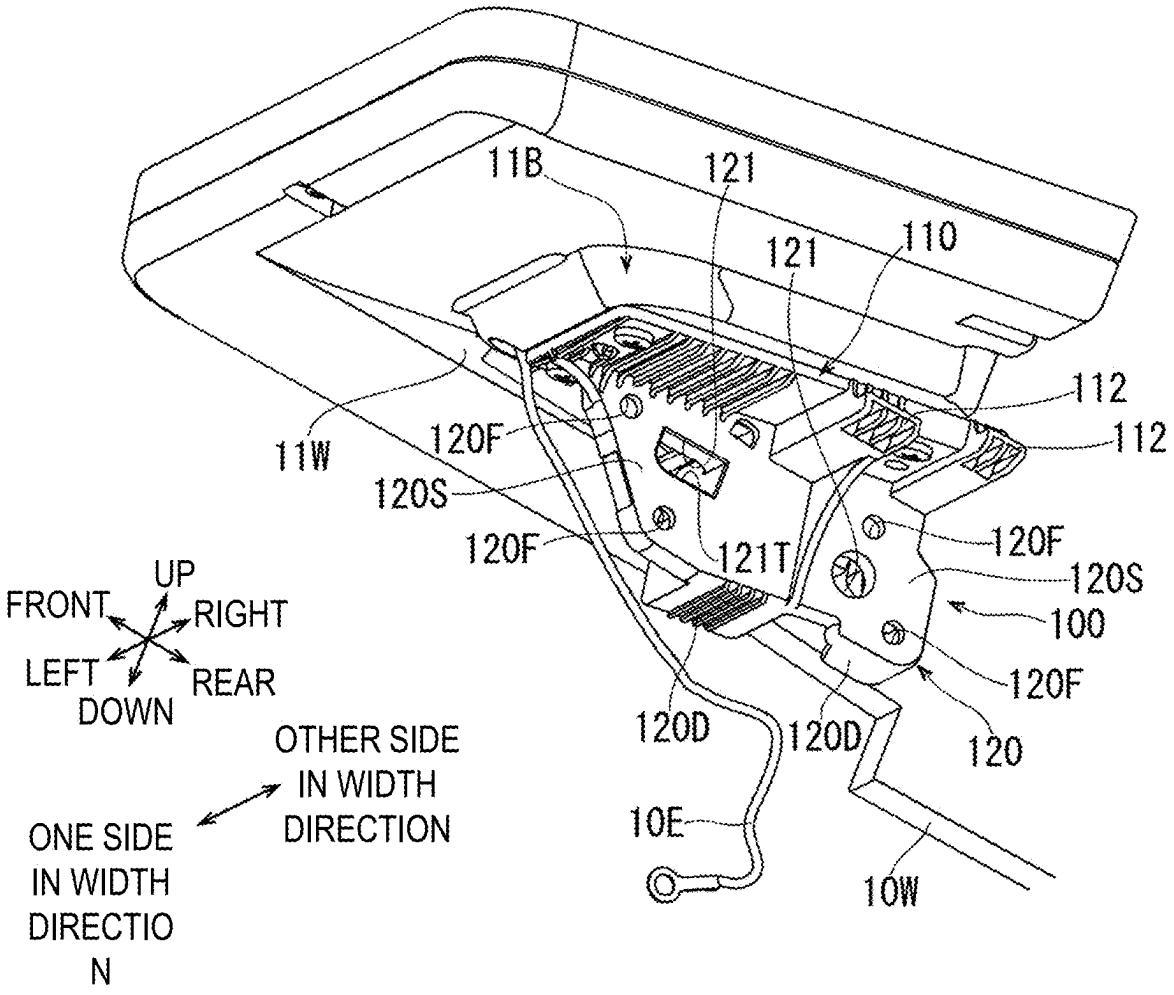
11B
121
121
110
112
112
11W
120F
120S
120F
121T
120F
120S
100
120F
120
120D
120D
10E
10W
UP
FRONT
RIGHT
LEFT
REAR
DOWN
OTHER SIDE IN WIDTH DIRECTION
ONE SIDE IN WIDTH DIRECTIO N

FIG. 13

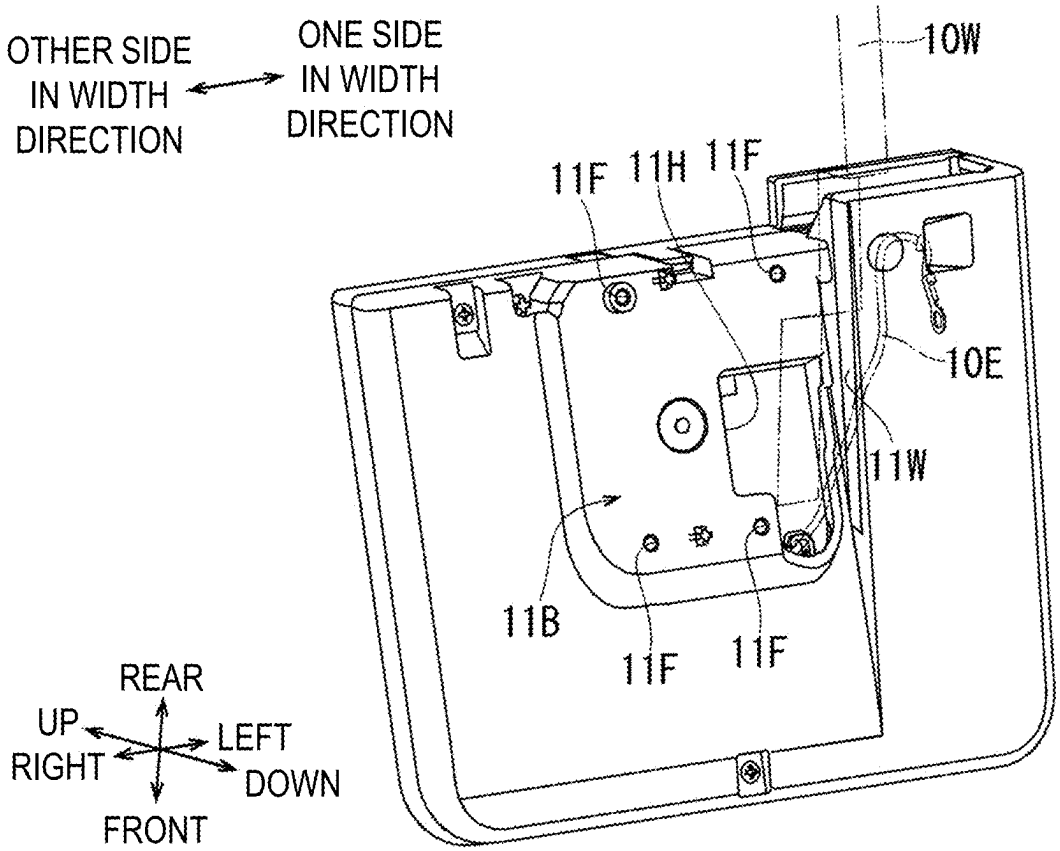
OTHER SIDE IN WIDTH DIRECTION
ONE SIDE IN WIDTH DIRECTION
10W
11F
11H
11F
10E
11W
11B
11F
11F
REAR
UP
LEFT
RIGHT
DOWN
FRONT

FIG. 14

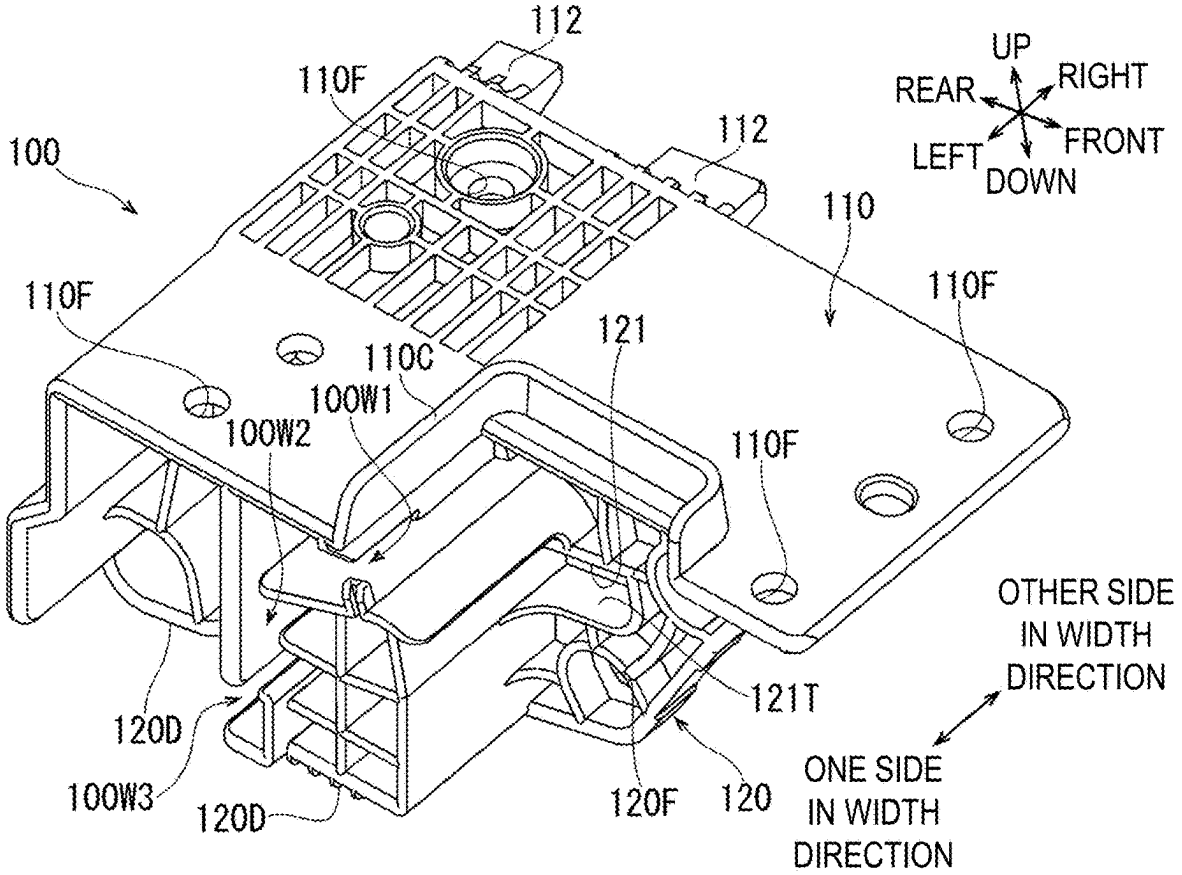
112
110F
112
100
110
110F
110F
121
110C
100W1
100W2
110F
120D
100W3
120D
120F
120
121T
UP
REAR
RIGHT
LEFT
FRONT
DOWN
OTHER SIDE IN WIDTH DIRECTION
ONE SIDE IN WIDTH DIRECTION

FIG. 15

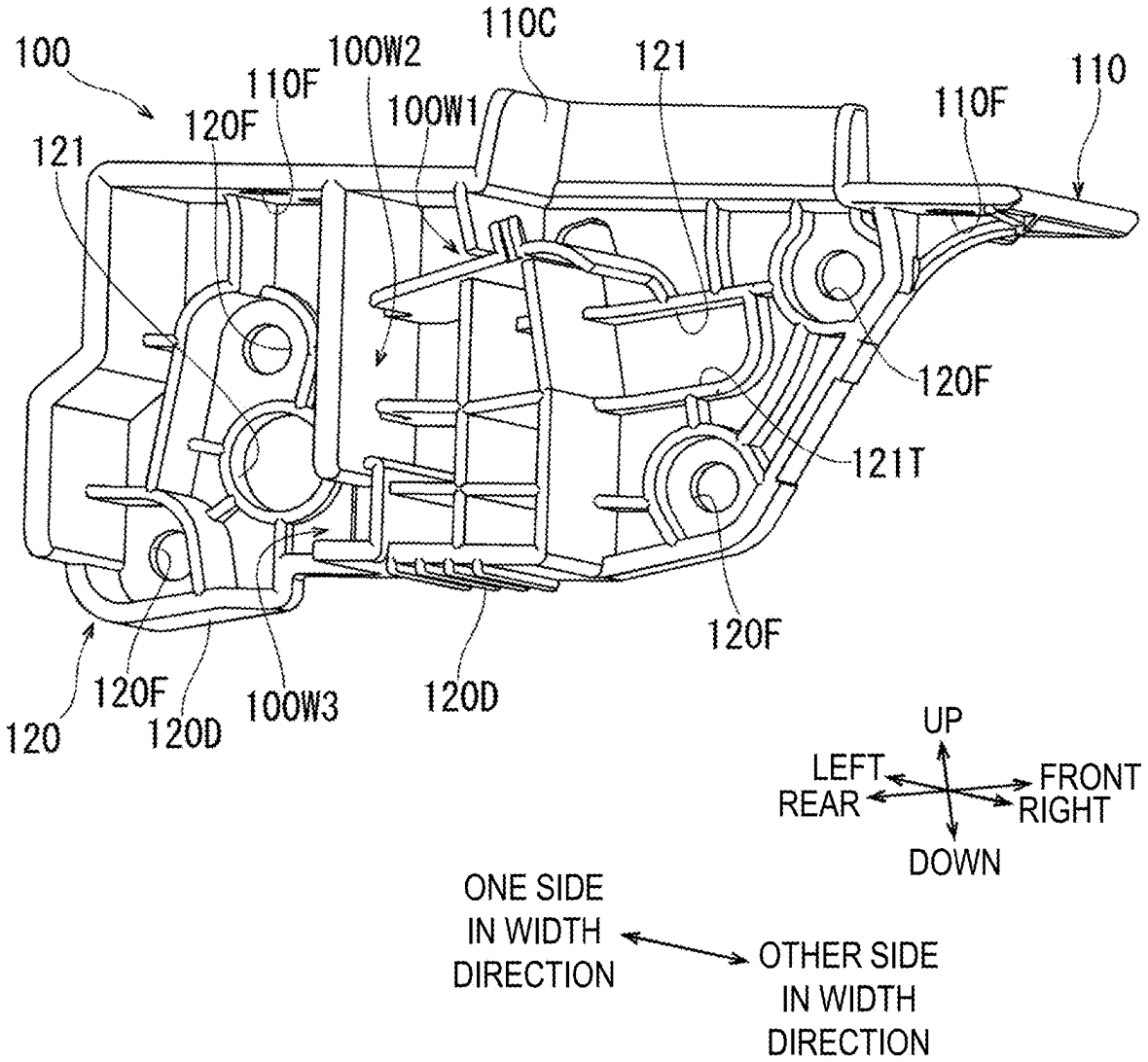
100
110C
100W2
121
110
110F
100W1
110F
120F
121
120F
121T
120F
120
120F
120D
100W3
120D
UP
LEFT
FRONT
REAR
RIGHT
DOWN
ONE SIDE IN WIDTH DIRECTION
OTHER SIDE IN WIDTH DIRECTION

FIG. 16

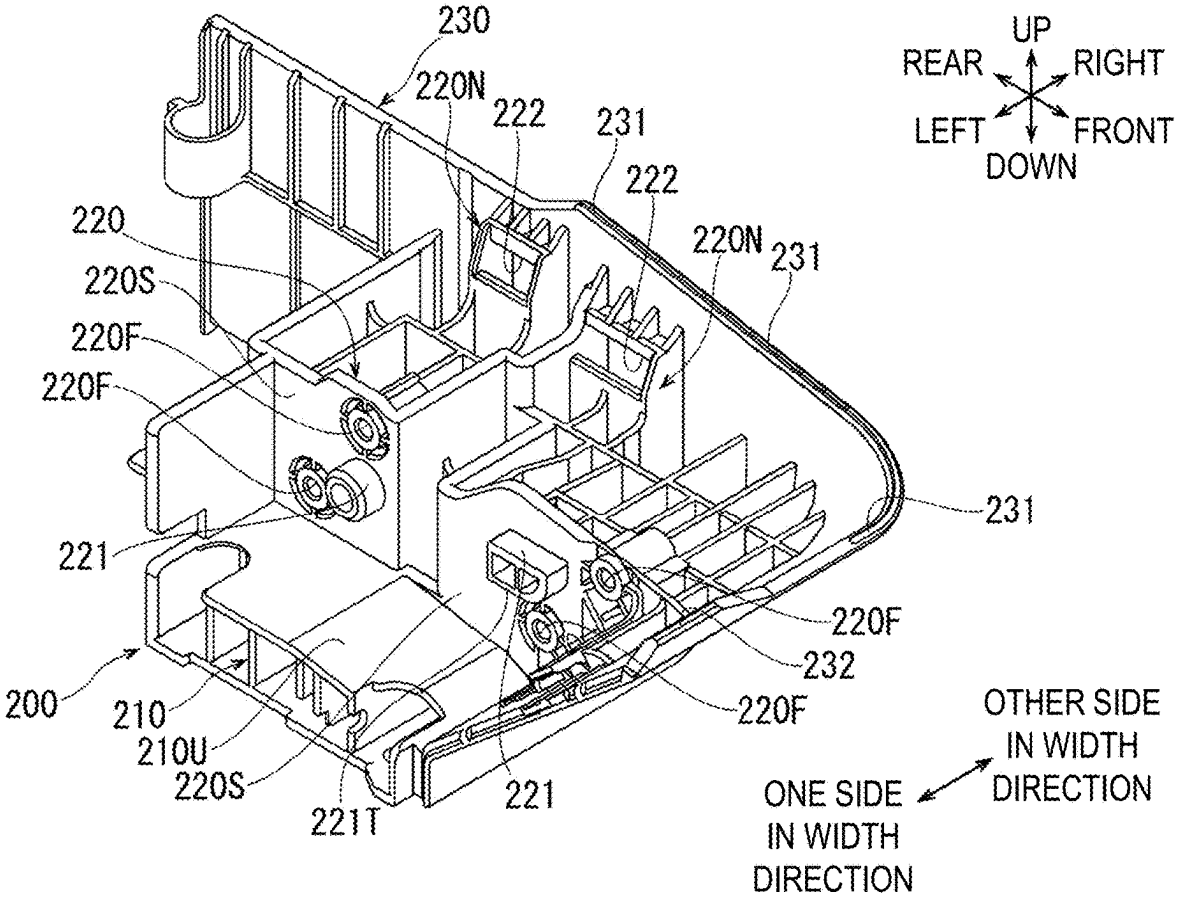
230
220N
222
231
222
220
220N
231
220S
220F
220F
231
221
220F
232
200
210
220F
210U
220S
221
221T
UP
REAR
RIGHT
LEFT
FRONT
DOWN
OTHER SIDE IN WIDTH DIRECTION
ONE SIDE IN WIDTH DIRECTION

FIG. 17

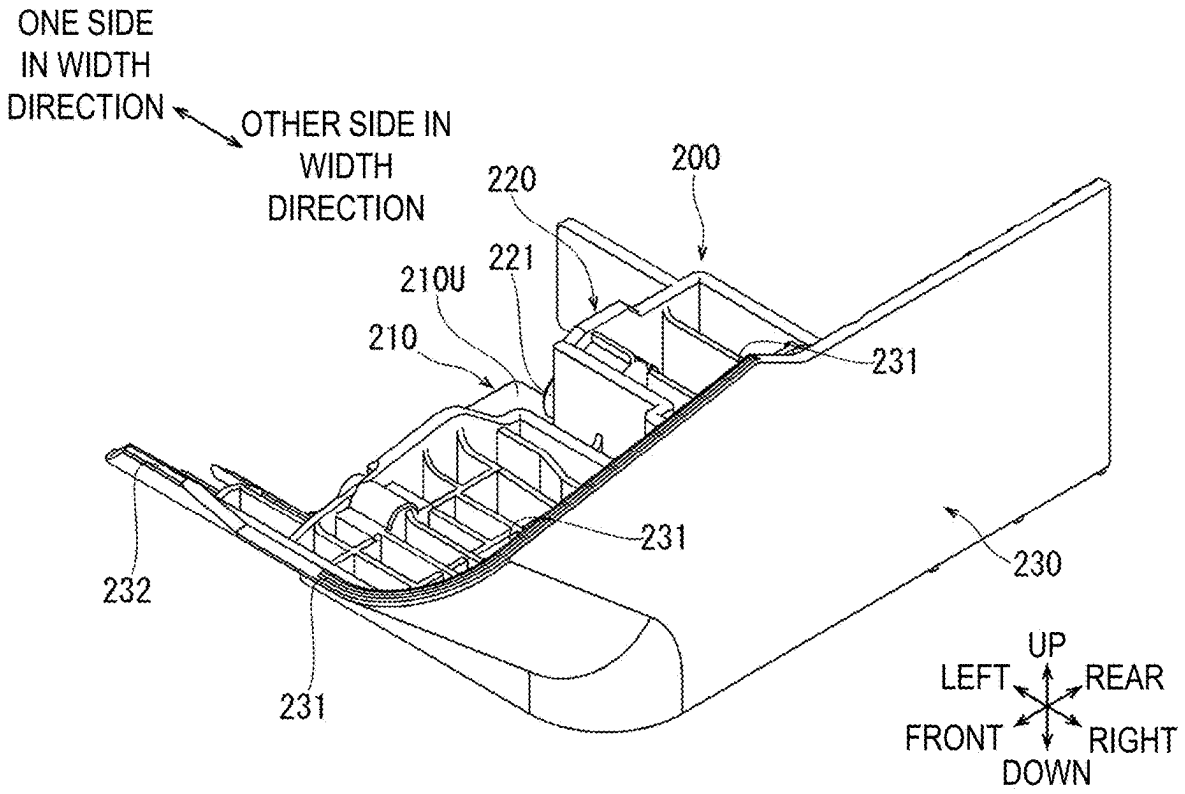
ONE SIDE IN WIDTH DIRECTION
OTHER SIDE IN WIDTH DIRECTION
200
220
221
210U
210
231
231
232
231
230
UP
LEFT
REAR
FRONT
RIGHT
DOWN

FIG. 18

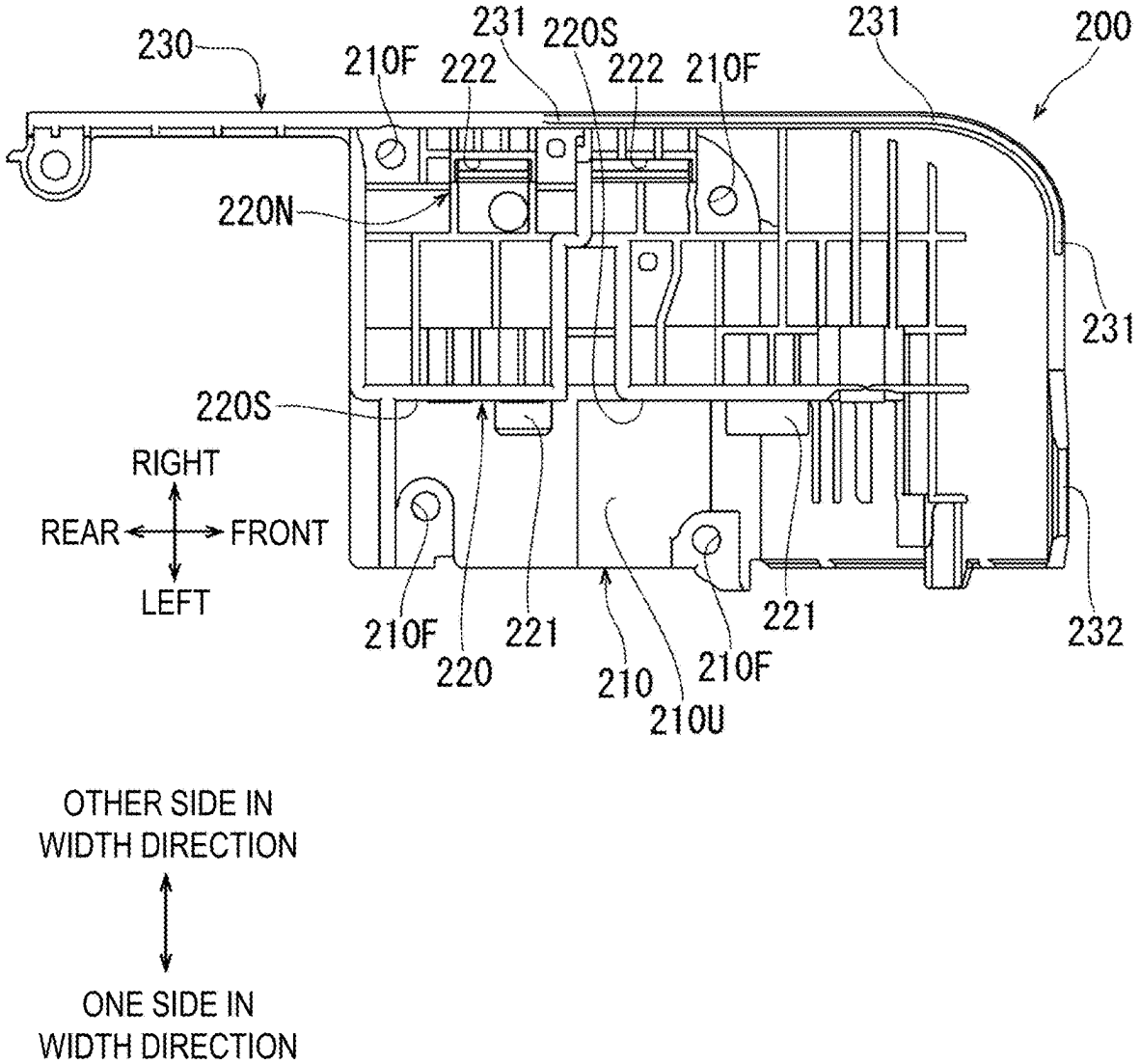
230
210F
222
231
220S
222
210F
231
200
220N
231
220S
RIGHT
REAR
FRONT
LEFT
210F
220
221
210
210U
210F
221
232
OTHER SIDE IN
WIDTH DIRECTION
ONE SIDE IN
WIDTH DIRECTION

FIG. 19

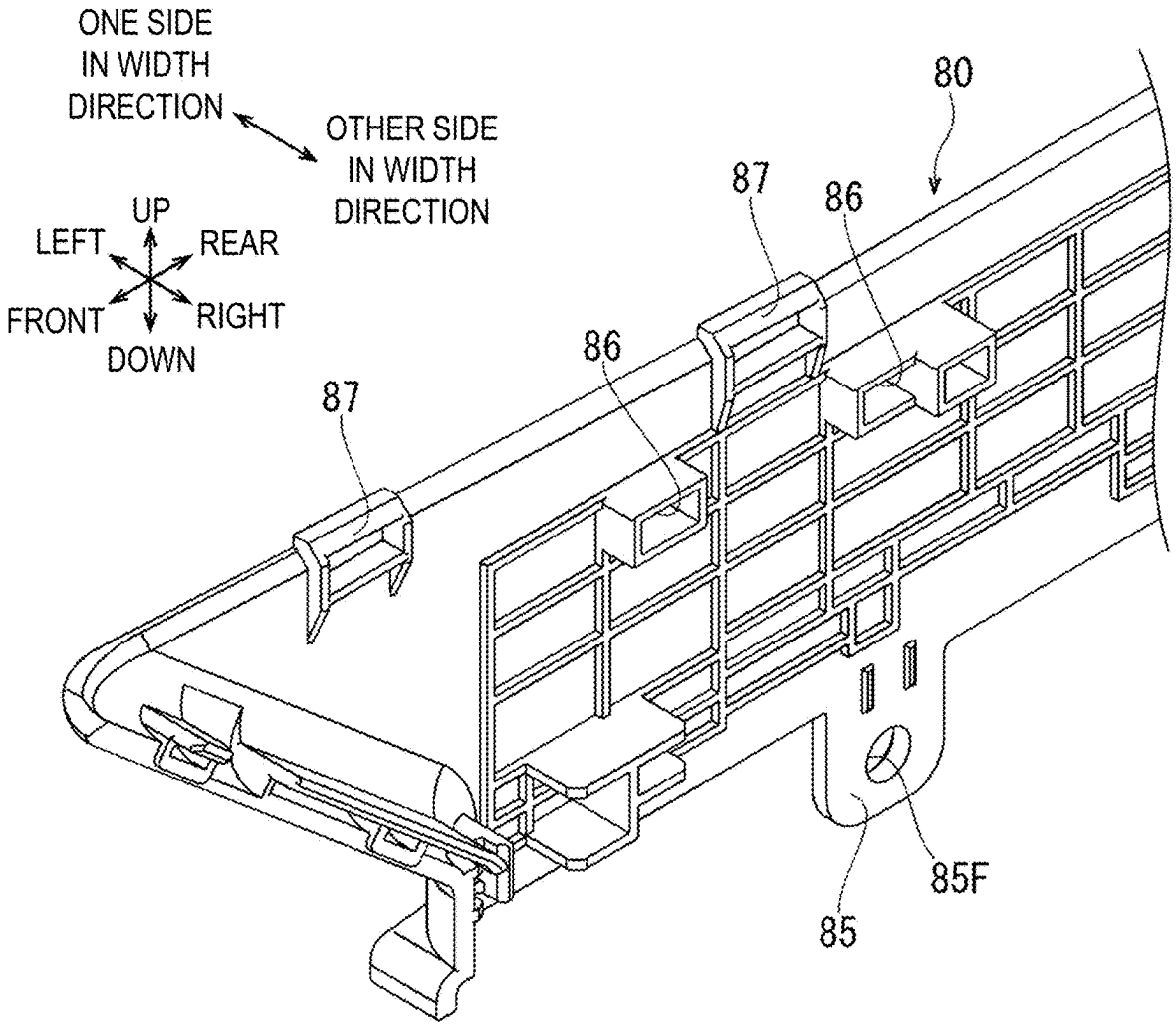
ONE SIDE
IN WIDTH
DIRECTION
OTHER SIDE
IN WIDTH
DIRECTION
UP
LEFT
REAR
FRONT
RIGHT
DOWN
80
87
86
86
87
85F
85

MULTIFUNCTION PRINTER

REFERENCE TO RELATED APPLICATIONS

[0001] This application claims priority from Japanese Patent Application No. 2024-028594 filed on Feb. 28, 2024. The entire content of the priority application is incorporated herein by reference.

BACKGROUND ART

[0002] A related art discloses an example of a multifunction printer. In this multifunction printer, an upper housing that houses an image reading unit is located above a lower housing that houses the image forming unit. A panel housing that houses an operation panel is located above the lower housing and protrudes forwards from the front end of the upper housing. It is not clear whether at least a part of the panel housing is formed to be integrated with the upper housing, but in general, at least a part of the panel housing is often formed to be integrated with the upper housing. A connection part connects the lower housing to the upper housing.

[0003] This multifunction printer is required to support the operation panel with strength capable of withstanding pressing force applied to the operation panel that receives an operation input. For this reason, in this multifunction printer, the front end of the connection part is located between the lower housing and the panel housing in the upward-and-downward direction, and is located in front of the upper housing so as to support the panel housing.

[0004] In addition, as another example of a conventional multifunction printer, there is a configuration in which the front end of a connection part is located behind a panel housing and does not support the panel housing. In this multifunction printer, at least a part of the panel housing is formed to be integrated with an upper housing, thereby ensuring strength to withstand pressing force applied to an operation panel.

[0005] However, in the above-mentioned multifunction printer, there is a case of adopting product development in which operation panels having different sizes are formed to be integrated with an upper housing.

[0006] When such product development is implemented in a configuration in which at least a part of a panel housing is formed to be integrated with the upper housing, it is necessary to design, manufacture, and store a plurality of types of upper housing components having shapes that respectively match the sizes of the operation panels. As a result, when a production plan and demand are unexpectedly changed from the original plan, it is difficult to respond to the unexpected state, and it is also necessary to secure a space to store the plurality of types of upper housing components.

[0007] When such product development is implemented in a configuration in which the front end of a connection part supports the panel housing, it is also necessary to design, manufacture, and store a plurality of types of connection parts having shapes that respectively match the sizes of the operation panels, leading to a problem similar to the above-described problem. In this case, if at least a part of the panel housing is formed to be integrated with the upper housing, the problem becomes even more serious.

[0008] The present disclosure has been made in consideration of the above-mentioned conventional circumferences, and an object thereof is to provide a multifunction printer configured, in a configuration in which operation panels having different sizes are formed to be integrated with an upper housing, not only to secure strength to withstand pressing force applied to the operation panel without connecting a panel housing to the upper housing, but also to reduce the number of housing components to be stored when a plurality of types of products are manufactured.

SUMMARY

[0009] A multifunction printer including: an image forming unit configured to form an image on a sheet; an image reading unit configured to read an image of a document; an operation panel configured to receive an operation; a lower housing configured to house the image forming unit; an upper housing configured to house the image reading unit, the upper housing being located above the lower housing; a panel housing configured to house the operation panel, the panel housing being located above the lower housing and located in front of the upper housing; a connection part connecting the lower housing to the upper housing; and a support part configured to support the panel housing, the support part being located between the lower housing and the panel housing in an upward-and-downward direction, the support part being located in front of the upper housing and the connection part, in which the support part includes: a first support part fixed to the panel housing; and a second support part fixed to the lower housing and configured to be connected to the first support part.

BRIEF DESCRIPTION OF DRAWINGS

[0010] FIG. **1** is a perspective view of a multifunction printer of an embodiment, illustrating a combination of a large-sized upper housing and a large-sized panel housing;

[0011] FIG. **2** is a partial perspective view of the multifunction printer of the embodiment, illustrating the combination of the large-sized upper housing and the large-sized panel housing;

[0012] FIG. **3** is a partial perspective view similar to FIG. **1**, illustrating a state in which a document cover is removed;

[0013] FIG. **4** is a perspective view of a joint cover;

[0014] FIG. **5** is a partial perspective view of the joint cover;

[0015] FIG. **6** is a partial top view of the multifunction printer of the embodiment, in which the partial top view illustrates the state in which the document cover is removed and the combination of the large-sized upper housing and the large-sized panel housing;

[0016] FIG. **7** is a partial top view similar to FIG. **6**, illustrating a combination of a small-sized upper housing and a small-sized panel housing;

[0017] FIG. **8** is a partial top view similar to FIG. **6**, illustrating a combination of the large-sized upper housing and a medium-sized panel housing;

[0018] FIG. **9** is a partial perspective view similar to FIG. **2**, illustrating a state in which an exterior cover is removed;

[0019] FIG. **10** is a partial cross-sectional view illustrating a cross section taken along line A-A in FIG. **6**;

[0020] FIG. **11** is a partial cross-sectional view illustrating a cross section taken along line B-B in FIG. **6**;

[0021] FIG. **12** is a perspective view of a panel housing and a first support part;

[0022] FIG. **13** is a perspective view of the panel housing;

[0023] FIG. **14** is a perspective view of the first support part;

[0024] FIG. **15** is a perspective view of the first support part;

[0025] FIG. **16** is a perspective view of a second support part;

[0026] FIG. **17** is a perspective view of the second support part;

[0027] FIG. **18** is a top view of the second support part; and

[0028] FIG. **19** is a partial perspective view of the exterior cover.

DESCRIPTION

[0029] Hereinafter, an embodiment of the present disclosure will be described with reference to the drawings.

Embodiment

[0030] As illustrated in FIG. **1**, a multifunction printer **1** of an embodiment is an example of a specific aspect of a multifunction printer of the present disclosure. In FIG. **1**, the side of an operation panel **18** of the multifunction printer **1** is defined as a front side. The left side when facing the operation panel **18** is defined as a left side. The respective directions illustrated in FIG. **2** and subsequent drawings are all displayed corresponding to the respective directions illustrated in FIG. **1**.

[0031] A width direction of the multifunction printer **1** is a direction perpendicular to a forward-and-rearward direction and an upward-and-downward direction, and is parallel to a leftward-and-rightward direction. In the present embodiment, the left side is one side in the width direction, and the right side is the other side in the width direction. The width direction is an example of a "second direction" of the present disclosure. In the present embodiment, one side in the width direction is the same as one side in the second direction, and the other side in the width direction is the same as the other side in the second direction. The width directions illustrated in FIG. **2** and subsequent drawings are all displayed corresponding to the width direction illustrated in FIG. **1**.

Housing, Connection Part, and Upper Housing

[0032] The multifunction printer **1** includes a lower housing **50** and an upper housing **20** illustrated in FIGS. **1** to **3**, and a connection part **60** illustrated in FIGS. **4** and **5**.

[0033] As illustrated in FIG. **1**, the lower housing **50** is formed to have a substantially box-shape and includes a joint cover **59** on the upper surface side of the lower housing **50**. As illustrated in FIGS. **4** and **5**, the joint cover **59** extends in the forward-and-rearward direction and the width direction, and covers the internal space of the lower housing **50** from above. In the present embodiment, the joint cover **59** is a resin member manufactured by injection molding of thermoplastic resin or the like.

[0034] As illustrated in FIG. **4**, a discharge tray **50**T is formed at the center of the upper surface of the joint cover **59** in the width direction. The discharge tray **50**T is inclined upwards from the rear end side of the joint cover **59** in the forward direction, and then extends in the forward direction approximately horizontally toward the front end edge of the upper surface of the lower housing **50**.

[0035] The connection part **60** is formed to be integrated with the joint cover **59**. The connection part **60** includes a first connection part **60**L, a second connection part **60**R, and a third connection part **60**B.

[0036] The first connection part **60**L protrudes upwards from a position on the left side of the discharge tray **50**T on the joint cover **59**, and extends in the forward-and-rearward direction. The second connection part **60**R protrudes upwards from a position on the right side of the discharge tray **50**T on the joint cover **59**, and extends in the forward-and-rearward direction.

[0037] The third connection part **60**B protrudes upwards from a position on the rear side of the discharge tray **50**T on the joint cover **59**, and extends in the width direction. The left end of the third connection part **60**B is connected to the rear end of the first connection part **60**L. The right end of the third connection part **60**B is connected to the rear end of the second connection part **60**R.

[0038] As illustrated in FIG. **5**, the lower housing **50** includes a base part **52**. The base part **52** is formed at a position on the front side of the front end of the first connection part **60**L on the joint cover **59**, and at a position on the left side of the front portion of the discharge tray **50**T. The upper surface of the base part **52** extends horizontally. The base part **52** is provided with four screw holes **52**F, a plurality of recessed portions, and the like.

[0039] As illustrated in FIG. **3**, the upper housing **20** is located above the lower housing **50**. The upper housing **20** includes a flat base **21** and an upper surface cover **22**. The flat base **21** is a flat box-shaped body, the length in the upward-and-downward direction of which is significantly smaller than that of the lower housing **50**, and has an open upper surface side. The upper surface cover **22** is attached to the upper surface side of the flat base **21**. A front wall **20**F of the upper housing **20** extends in the width direction at a position away from the front surface of the lower housing **50** to the rear side.

[0040] In the present embodiment, the flat base **21** and the upper surface cover **22** are resin members manufactured by injection molding of thermoplastic resin or the like.

[0041] The first connection part **60**L, the second connection part **60**R, and the third connection part **60**B illustrated in FIG. **4** connect the lower housing **50** to the upper housing **20** in a state of being covered with a plurality of exterior covers, as illustrated in FIG. **2** and FIG. **3**.

Image Forming Unit

[0042] As illustrated in FIG. **1**, the multifunction printer **1** includes an image forming unit **5**. The lower housing **50** houses the image forming unit **5**. The image forming unit **5** is a well-known configuration, so illustration and description will be simplified. The image forming unit **5** forms an image on a sheet by an inkjet method or an electrophotographic method, and is configured to discharge the sheet to the discharge tray **50**T.

Image Reading Unit

[0043] As illustrated in FIG. **3**, the multifunction printer **1** includes an image reading unit **2**. The upper housing **20** houses the image reading unit **2**. The image reading unit **2** includes a document glass **2**G and a reading sensor **2**S.

[0044] The document glass **2**G is disposed on the upper surface of the upper housing **20**. The upper surface cover **22**

covers the outer circumferential edge of the document glass **2**G. The document glass **2**G includes a document placement surface **2**G**1** surrounded by the upper surface cover **22** and oriented upwards. A document to be read is placed on the document placement surface **2**G**1**.

[0045] The reading sensor **2**S is configured to move in the leftward-and-rightward direction, which is the sub-scanning direction, below the document placement surface **2**G**1**, and is configured to read an image of the document in a line shape in the forward-and-rearward direction, which is the main scanning direction.

Document Cover

[0046] As illustrated in FIGS. **1** and **2**, the multifunction printer **1** includes a document cover **30**. The document cover **30** is located above the upper housing **20**. The rear end of the document cover **30** is connected to the upper housing **20** via a hinge (not illustrated), so that the document cover is configured to be opened and closed.

[0047] In a state where the document cover **30** is closed, the document cover **30** covers the document placement surface **2**G**1**. On the other hand, although not illustrated, in a state where the document cover **30** is opened, the document cover exposes the document placement surface **2**G**1**. In this state, a user can place a document on the document placement surface **2**G**1** or remove the document placed thereon.

Size of Lower Housing, Upper Housing, and the Like

[0048] As illustrated in FIGS. **1** to **3** and **6** to **8**, in the present embodiment, the multifunction printer **1** has only one size for the lower housing **50**. On the other hand, the multifunction printer **1** has two sizes for the upper housing **20**, in which the two sizes include a "large" size illustrated in FIGS. **1** to **3**, **6** and **8**, and a "small" size illustrated in FIG. **7**, corresponding to the size of the document to be read.

[0049] The multifunction printer **1** also has two sizes for the document cover **30**, in which the two sizes include a "large" size illustrated in FIG. **1** and FIG. **2** and a "small" size not illustrated, corresponding to the two sizes of the upper housing **20**. The joint cover **59** has only one size, and the connection part **60** is provided to correspond to the "large" and "small" sizes of the upper housing **20**.

Operation Panel and Panel Housing

[0050] As illustrated in FIG. **1** and FIG. **3**, the multifunction printer **1** includes the operation panel **18** and a panel housing **10**.

[0051] Although the operation panel **18** has a well-known configuration and will not be described here, the operation panel **18** includes a transparent touch panel and a display unit disposed on the back surface side of the touch panel. The operation panel **18** is configured to receive an operation made by a user to instruct the image forming unit **5**, the image reading unit **2**, and the like to be operated, and to perform settings thereof. The operation panel **18** is configured to display images illustrating operating states and settings of the image forming unit **5**, image reading unit **2**, and the like.

[0052] A direction of pressing force F**1** acting on the operation panel **18** configured to receive the operation is a downward direction in the vertical direction. The downward direction in the vertical direction is an example of a "first direction" of the present disclosure.

[0053] As illustrated in FIGS. **1** to **3** and **9**, the panel housing **10** is located above the lower housing **50** and is in front of the upper housing **20**. The panel housing **10** is supported by a support part **19**, which will be described later. The rear end of the panel housing **10** is adjacent to a portion located on the left end side of a front wall **20**F of the upper housing **20**. The panel housing **10** is inclined such that the front end of the panel housing is located lower than the rear end of the panel housing.

[0054] As illustrated in FIGS. **10** to **13**, the panel housing **10** includes a panel base **11** and a panel cover **12**. The panel base **11** is formed to have a flat and approximately box-shaped body, and the upper surface side thereof is opened. The panel cover **12** is attached to the upper surface side of the panel base **11**.

[0055] In the present embodiment, the panel base **11** and the panel cover **12** are resin members manufactured by injection molding of thermoplastic resin or the like.

[0056] As illustrated in FIGS. **3** and **10**, the panel housing **10** houses the operation panel **18**. The panel cover **12** covers the outer circumferential edge of the operation panel **18**.

[0057] As illustrated in FIGS. **12** and **13**, the panel base **11** includes a base part **11**B. The base part **11**B is located at the center in the width direction of the bottom wall of the panel base **11**, and a portion of the base located from the center in the forward-and-rearward direction to the rear end bulges downwards.

[0058] As illustrated in FIG. **10**, the lower surface of the base part **11**B is inclined such that the front end of the base is located lower than the rear end of the base. As illustrated in FIG. **13**, four screw holes **11**F are formed in the base part **11**B. The base part **11**B also has a substantially rectangular opening **11**H.

[0059] The opening **11**H is provided to pull a wire harness **10**W and an earth wire **10**E from inside the panel housing **10** to the outside. The wire harness **10**W is a collection of multiple electrical wirings connected to the operation panel **18**. The earth wire **10**E is also connected to the operation panel **18**.

[0060] As illustrated in FIG. **3** and FIG. **13**, a portion **12**B located on the rear and left end side of the panel cover **12** is a substantially rectangular plate-like piece that protrudes rearwards further than the other portions on the rear end side of the panel cover **12**.

[0061] As illustrated in FIGS. **3** and **11**, the portion **12**B of the panel cover **12** covers a corner portion of the front end side and the left end side of the upper surface cover **22** from above, in a state where the upper surface of the portion is flush with the upper surface of the upper surface cover **22**.

[0062] In the present embodiment, the multifunction printer **1** has three sizes for the operation panel **18**, in which the three sizes include a "large" size illustrated in FIGS. **1**, **3**, **6** and **10**, a "small" size illustrated in FIG. **7**, and a "medium" size illustrated in FIG. **8**. Accordingly, the multifunction printer **1** has three sizes for the panel housing **10**, in which the three sizes include a "large" size illustrated in FIGS. **1** to **3**, **6**, and **9** to **13**, a "small" size illustrated in FIG. **7**, and a "medium" size illustrated in FIG. **8**.

[0063] As illustrated in FIGS. **6** and **8**, the left side surface of the panel housings **10** of the "large" and "medium" size is approximately flush with the left side surface of the upper housing **20** of the "large" size. As illustrated in FIG. **7**, the

left side surface of the panel housing **10** of the "small" size is substantially flush with the left side surface of the upper housing **20** of the "small" size. In other words, in the multifunction printer **1**, the left side surface of the upper housing **20** and the left side surface of the panel housing **10** are substantially flush with each other such that a combination of the upper housing **20** and the panel housing **10** does not cause any sense of incongruity in design.

Support Part

[0064] As illustrated in FIG. **9**, the multifunction printer **1** has a support part **19**. The support part **19** is located between the lower housing **50** and the panel housing **10** in the upward-and-downward direction, and is located in front of the upper housing **20** and the first connecting part **60**L of the connection part **60**.

[0065] As illustrated in FIGS. **9** to **11**, the support part **19** supports the panel housing **10**. The support part **19** will be described in detail below.

[0066] The support part **19** is configured to have a first support part **100** and a second support part **200**. As illustrated in FIG. **9**, the support part **19** includes two sets of first fitting parts **221** and first fitted parts **121**. As illustrated in FIG. **11**, the support part **19** includes two sets of second fitting parts **112** and second fitted parts **222**.

[0067] Each of the first fitting parts **221** and each of the second fitting parts **112** is an example of a "fitting part" of the present disclosure. Each of the first fitted parts **121** and each of the second fitted parts **222** is an example of a "fitted part" of the present disclosure.

[0068] As illustrated in FIG. **14**, the first fixing part **110** is a substantially flat plate shape extending along the lower surface of the base part **11**B of the panel housing **10**. Four screw insertion holes **110**F and a C-shaped rib **110**C are formed in the first fixing part **110**.

[0069] The C-shaped rib **110**C protrudes upwards from a portion of the first fixing part **110**, the portion being located at the front side and one side of the width direction, and extends along the inner circumferential edge of the opening **11**H of the base part **11**B. The C-shaped rib **110**C is substantially "C" shaped when viewed from above.

[0070] As illustrated in FIG. **12**, the first fixing part **110** is coupled to the base part **11**B of the panel base **11** by inserting four screws into the screw insertion holes **110**F and screwing them into the respective screw holes **11**F of the panel base **11**. In this manner, the first fixing part **110** is fixed to the panel base **11** of the panel housing **10**.

[0071] The first mounting part **120** is connected to the first fixing part **110** and extends downwards and in the forward-and-rearward direction. A first side surface **120**S of the first mounting part **120** is a flat surface that faces the other side in the width direction, and extends in the forward-and-rearward direction and the upward-and-downward direction. As illustrated in FIG. **11**, the first mounting part **120** extends toward the base part **52** of the lower housing **50**.

[0072] As illustrated in FIG. **15**, the first mounting part **120** has a plurality of ribs that intersect each other on the side opposite the first side surface **120**S, thereby increasing its rigidity. A bottom surface **120**D of the first mounting part **120** is formed by the lower end surfaces of the plurality of ribs that are located at the lowest of the ribs, and a large length in the width direction is secured.

[0073] The first mounting part **120** has four screw insertion holes **120**F. The two screw insertion holes **120**F located at the front end side of the first mounting part **120** are spaced apart from each other in the upward-and-downward direction. The two screw insertion holes **120**F located at the rear end side of the first mounting part **120** are also spaced apart from each other in the upward-and-downward direction.

[0074] As illustrated in FIG. **15**, the first support part **100** includes guide parts **100**W**1**, **100**W**2**, and **100**W**3**.

[0075] The guide parts **100**W**1**, **100**W**2**, and **100**W**3** are formed by some of the surfaces of the plurality of ribs formed on the opposite side of the first side surface **120**S of the first mounting part **120**, or by gaps between the ribs.

[0076] As illustrated in FIG. **9**, the guide parts **100**W**1**, **100**W**2**, and **100**W**3** guide the wire harness **10**W that has passed through the opening **11**H of the panel housing **10** to the rear side and a lower corner portion of the first mounting part **120**, while bending the wire harness a plurality of times.

Second Fitting Part

[0077] As illustrated in FIGS. **12** and **14**, two second fitting parts **112** are formed on the first fixing part **110** of the first support part **100**. Each of the second fitting part **112** protrudes in a fitting direction from the right end edge located on the other side in the width direction of the first fixing part **110**.

[0078] The fitting direction is perpendicular to a direction of the pressing force F**1** acting on the operation panel **18**, that is, the downward direction in the vertical direction. In the present embodiment, the fitting direction is parallel to the width direction. Each of the second fitting part **112** protrudes toward the other side in the width direction.

[0079] As illustrated in FIGS. **10** and **12**, each of the second fitting parts **112** includes a flat plate extending approximately horizontally in the forward-and-rearward direction and the width direction, and a plurality of ribs protruding downwards from the lower surface of the flat plate and extending in the width direction. The front second fitting part **112** is located lower than the rear second fitting part **112**.

First Fitted Part

[0080] As illustrated in FIGS. **12** and **15**, two first fitted parts **121** are formed in the first mounting part **120** of the first support part **100**. Each of the first fitted parts **121** is recessed from the first side surface **120**S of the first mounting part **120** in the fitting direction. Each of the first fitted parts **121** is recessed from the first side surface **120**S toward one side in the width direction and penetrates the first mounting part **120**.

[0081] The first fitted part **121** located on the rear end side of the first mounting part **120** is a hole having a cylindrical inner circumferential surface.

[0082] The first fitted part **121** located at the front end side of the first mounting part **120** is an elongated hole having a receiving part **121**T, and extends in the forward-and-rearward direction. In the receiving part **121**T, a part below the inner circumferential surface of the first fitted part **121** is formed in a flat shape.

Second Support Part

[0083] As illustrated in FIGS. **16** to **18**, a second support part **200** integrally includes a second fixing part **210**, a second mounting part **220**, and a cover part **230**. In the

present embodiment, the second support part **200** is a resin member manufactured by injection molding of a thermoplastic resin or the like.

[0084] As illustrated in FIGS. **11** and **16**, the second fixing part **210** extends in the forward-and-rearward direction and width direction along the base part **52** of the lower housing **50**. The second fixing part **210** has a plurality of ribs that intersect each other such that a thickness thereof in the upward-and-downward direction is increased to improve rigidity.

[0085] As illustrated in FIG. **18**, screw insertion holes **210**F are respectively formed in the four corner portions on the lower surface side of the second fixing part **210**.

[0086] The second fixing part **210** is coupled to the base part **52** of the joint cover **59** by inserting four screws into the respective screw insertion holes **210**F and screwing them into the respective screw holes **52**F of the base part **52**. In this manner, as illustrated in FIG. **9** to FIG. **11**, the second fixing part **210** is fixed to the base part **52** of the lower housing **50**.

[0087] As illustrated in FIG. **16**, an upper surface **210**U of the second fixing part **210** has a large length in the width direction, similarly to the bottom surface **120**D of the first mounting part **120**.

[0088] The second mounting part **220** is connected to the second fixing part **210**, and extends upwards and extends in the forward-and-rearward direction. A second side surface **220**S of the second mounting part **220** is a flat surface oriented toward one side in the width direction, and formed to extend in the forward-and-rearward direction and the upward-and-downward direction.

[0089] The lower end edge of the second side surface **220**S is connected to the other end edge in the width direction of the upper surface **210**U. As illustrated in FIGS. **10** and **11**, the second mounting part **220** extends toward the panel base **11** of the panel housing **10**.

[0090] As illustrated in FIG. **16**, four screw holes **220**F are formed in the second mounting part **220**. The two screw holes **220**F located at the front end side of the second mounting part **220** are spaced apart from each other in the upward-and-downward direction. The two screw holes **220**F located at the rear end side of the second mounting part **220** are also spaced apart from each other in the upward-and-downward direction.

[0091] As illustrated in FIGS. **16** to **18**, the cover part **230** is connected to the front end of the second fixing part **210**, the front end of the second mounting part **220**, and the other end in the width direction of the second mounting part **220**, and forms the exterior surface of the second support part **200**.

[0092] A portion of the cover part **230** extending rearwards beyond the second mounting part **220** forms an exterior surface that covers a part of the first connection part **60**L.

[0093] A first cover support part **231** and a second cover support part **232** are formed on the upper end edge of the cover part **230**. The first cover support part **231** and the second cover support part **232** are examples of the "cover support part" of the present disclosure.

[0094] The front end of the first cover support part **231** is located at the left end of a portion of the upper end edge of the cover part **230**, in which the portion curves in an arc shape on the front side. The rear end of the first cover support part **231** is located at the middle part of a portion of the upper end edge of the cover part **230**, in which the portion extends in the forward-and-rearward direction.

[0095] The second cover support part **232** is located at a portion of the upper end edge of the cover part **230**, in which the portion extends in the width direction on the front side and left side and protrudes in a substantially trapezoidal shape.

First Fitting Part

[0096] As illustrated in FIG. **16**, two first fitting parts **221** are formed in the second mounting part **220** of the second support part **200**. Each of the first fitting parts **221** protrudes from the second side surface **220**S of the second mounting part **220** in the fitting direction. Each of the first fitting parts **221** protrudes from the second side surface **220**S to one side in the width direction.

[0097] The first fitting part **221** located on the rear end side of the second mounting part **220** is a cylindrical protrusion having an outer diameter large enough to fit into the first fitted part **121**.

[0098] The first fitting part **221** located on the front end side of the second mounting part **220** is a roughly rectangular pillar-shaped protrusion having an abutment part **221**T and extending in the forward-and-rearward direction. In the abutment part **221**T, a part below the outer circumferential surface of the first fitting part **221** is formed in a flat shape.

Second Fitted Part

[0099] Two second fitted parts **222** are formed in the second mounting part **220** of the second support part **200**. Each of the second fitted parts **222** is located above the second side surface **220**S of the second mounting part **220**, and is recessed in the fitting direction from a printer portion **220**N located away from the second side surface **220**S on the other side in the width direction. Each of the second fitted parts **222** is recessed from the printer portion **220**N toward the other side in the width direction.

[0100] As illustrated in FIG. **10**, each of the second fitted parts **222** is rectangular when viewed in the width direction. The front second fitted part **222** is located below the rear second fitted part **222**.

Connection Between First Support Part and Second Support Part

[0101] The first support part **100** in a state where the first fixing part **110** is fixed to the panel base **11** of the panel housing **10**, and the second support part **200** in which the second fixing part **210** is fixed to the base part **52** of the lower housing **50** are connected to each other as follows.

[0102] First, a worker performing assembly work holds the first support part **100** at a position spaced apart from the second support part **200** on one side in the width direction and upwards. The worker then abuts the bottom surface **120**D of the first mounting part **120** against the upper surface **210**U of the second fixing part **210** in a state in which the first side surface **120**S of the first mounting part **120** is spaced apart from the second side surface **220**S of the second mounting part **220** to one side in the width direction.

[0103] The worker then moves the first mounting part **120** toward the other side in the width direction and brings the first side surface **120**S to be closer to the second side surface **220**S. As a result, the front first fitting part **221** is inserted into the front first fitted part **121**. The rear first fitting part

221 is inserted into the rear first fitted part **121**. The front second fitting part **112** is inserted into the front second fitted part **222**. The rear second fitting part **112** is inserted into the rear second fitted part **222**.

[0104] Then, as illustrated in FIG. **11**, the worker causes the first side surface **120**S and the second side surface **220**S to abut on each other in the width direction.

[0105] As a result, as illustrated in FIG. **9**, the front first fitted part **121** is fitted into the front first fitting part **221**. At this time, the receiving part **121**T of the front first fitted part **121** receives the abutment part **221**T of the front first fitting part **221** from below.

[0106] As illustrated in FIG. **9** and FIG. **11**, the rear first fitted part **121** is fitted into the rear first fitting part **221**.

[0107] As illustrated in FIG. **10** and FIG. **11**, the front second fitted part **222** is fitted into the front second fitting part **112**. As illustrated in FIG. **10**, the rear second fitted part **222** is fitted into the rear second fitting part **112**. The front set of the second fitting part **112** and the second fitted part **222** is located lower than the rear set of the second fitting part **112** and the second fitted part **222**.

[0108] Finally, as illustrated in FIG. **9** and FIG. **11**, the worker couples the first mounting part **120** to the second mounting part **220** by inserting four screws into the respective screw insertion holes **120**F of the first mounting part **120** and screwing them into the respective screw holes **220**F of the second mounting part **220**.

[0109] As a result, in a state where the first mounting part **120** is located closer to one side in the width direction than to the second mounting part **220** and the first side surface **120**S and the second side surface **220**S come into abutment with each other in the width direction, the first support part **100** and the second support part **200** are connected to each other, and the support part **19** supports the panel housing **10**.

[0110] In a state where the first support part **100** and the second support part **200** are connected to each other, the bottom surface **120**D of the first mounting part **120** and the upper surface **210**U of the second fixing part **210** face each other with a first gap G**1** in the upward-and-downward direction.

[0111] The first gap G**1** is set to a size that allows abutment of the bottom surface **120**D of the first mounting part **120** and the upper surface **210**U of the second fixing part **210**, in a case where the pressing force F**1** is applied to the operation panel **18**. In the present embodiment, the first gap G**1** is about 0. several mm to 1. several mm.

[0112] As illustrated in FIGS. **9** and **10**, the first cover support part **231** is located widthwise away from the first support part **100** and abuts on the panel base **11** from below to support the panel housing **10**. The second cover support part **232** is located in front of the first support part **100** and abuts on the panel base **11** from below to support the panel housing **10**.

[0113] As illustrated in FIG. **9**, the wire harness **10**W passes through the opening **11**H of the panel housing **10**, then passes only through the first support part **100** of the support part **19**, and further passes through the left side surface of the first connection part **60**L of the connection part **60** so as to be routed to the inside of the lower housing **50**.

[0114] In the present embodiment, the multifunction printer **1** has only one type of the second support part **200**, as illustrated in FIGS. **9** to **11** and **16** to **18**. On the other hand, the multifunction printer **1** has two types of the first support parts **100**, such as a first type corresponding to the operation panel **18** and the panel housing **10** of the "large" and "small" sizes, as illustrated in FIGS. **6**, **7**, **9** to **12**, **14** and **15**, and a second type corresponding to the operation panel **18** and the panel housing **10** of the "medium" size, as illustrated in FIG. **8**.

[0115] As illustrated in FIGS. **6** and **7**, the first fixing part **110** of the first support part **100** of the first type is located at the center of the operation panel **18** and the panel housing **10** of the "large" and "small" sizes in the width direction.

[0116] On the assumption that the first support part **100** of the first type is applied to the operation panel **18** of the "medium" size, the first fixing part **110** of the first support part **100** of the first type becomes biased to the other side of the operation panel **18** and the panel housing **10** of the "medium" size in the width direction.

[0117] As illustrated in FIG. **8**, the first fixing part **110** of the second type of the first support part **100** extends further to one side in the width direction than the first fixing part **110** of the first type of the first support part **100** such that the fixing part is located at the center of the operation panel **18** and the panel housing **10** of the "medium" size in the width direction.

[0118] In addition, in the present embodiment, although not illustrated, when a heavy panel housing **10** is supported, the first support part **100** and the second support part **200** of a type having high strength are used.

Exterior Cover

[0119] As illustrated in FIG. **2** and FIG. **11**, the multifunction printer **1** is provided with an exterior cover **80**. The exterior cover **80** is located closer to one side in the width direction than to the first connection part **60**L of the connection part **60**, the first support part **100**, and the second support part **200**, and extends in the upward-and-downward direction and the forward-and-rearward direction.

[0120] The exterior cover **80** forms an exterior surface that covers the first connection part **60**L and the first support part **100**. In the present embodiment, the exterior cover **80** is a resin member manufactured by injection molding of a thermoplastic resin or the like.

[0121] As illustrated in FIG. **19**, a cover fixing part **85** is formed on the lower end side of the exterior cover **80** so as to protrude downwards. The cover fixing part **85** is formed with a screw insertion hole **85**F. In FIG. **19**, one front cover fixing part **85** is illustrated, but the exterior cover **80** includes a plurality of cover fixing portions **85** arranged in the forward-and-rearward direction.

[0122] Two cover abutment part **86** and two cover protrusions **87** are formed on the upper end side of the exterior cover **80**.

[0123] Each of the cover abutment parts **86** is a protruding portion that protrudes toward the other side in the width direction from the back surface facing the other side in the width direction of the exterior cover **80**. The cover abutment parts **86** are spaced apart from each other in the forward-and-rearward direction.

[0124] Each of the cover protrusions **87** protrudes slightly toward the other side in the width direction from a position on the back surface of the exterior cover **80**, in which the position is higher than the respective cover abutment parts **86**, and further protrudes upwards than the upper end edge

of the exterior cover **80**. The respective cover protrusions **87** are spaced apart from each other in the forward-and-rearward direction.

[0125] As illustrated in FIG. **5**, a plurality of screw holes **59**F are formed side by side in the forward-and-rearward direction in a left end surface of the joint cover **59**, in which the left end surface is located closer to one side in the width direction than to the first connection part **60**L and the base part **52**.

[0126] Each of the cover fixing parts **85** is coupled to the left end surface of the joint cover **59** by inserting a plurality of screws into the respective screw insertion holes **85**F and screwing them into the respective screw holes **59**F of the joint cover **59**. In this manner, the lower end side of the exterior cover **80** is fixed to the lower housing **50**. As illustrated in FIG. **11**, each of the cover abutment parts **86** abuts on the first mounting part **120** in the width direction.

[0127] As illustrated in FIG. **11** to FIG. **13**, the panel base **11** includes an opposing wall **11**W. As illustrated in FIG. **11**, the opposing wall **11**W is located closer to one side in the width direction than to the upper end of the exterior cover **80** and each of the cover protrusions **87**, protrudes downwards, and extends in the forward-and-rearward direction.

[0128] As illustrated in FIG. **2**, the upper end of the exterior cover **80** and each of the cover protrusions **87** are opposed to the opposing wall **11**W so as not to be exposed.

[0129] As illustrated in FIG. **11**, the lower end of the opposing wall **11**W and the upper end of the exterior cover **80** and each of the cover protrusions **87** face each other across a second gap G**2** in the width direction.

[0130] The second gap G**2** is set to a size enabling abutment of the upper end of the exterior cover **80** and each of the cover protrusions **87**, in a case where the pressing force F**1** is applied biased toward one side in the width direction of the panel housing **10**.

Effects of Action

[0131] In the multifunction printer **1**, as illustrated in FIGS. **6** to **8**, in the case of the first support part **100** and the second support part **200**, two types of the first support part **100** corresponding to the operation panel **18** having different sizes ("large", "medium", and "small") are prepared, and the panel housing **10** for housing the operation panel **18** having any size can be supported by the support part **19** including the second support part **200** and the first support part **100** appropriately selected according to the operation panel **18** having any size.

[0132] For example, when the first support part **100** of the first type illustrated in FIGS. **6** and **7** is used for the operation panel **18** and the panel housing **10** of the "medium" size such that deviation of overhang of the panel housing **10** becomes large, the deviation of the overhang can be reduced by using the first support part **100** of the second type illustrated in FIG. **8** for the operation panel **18** and panel housing **10** of the "medium" size.

[0133] Furthermore, when supporting the heavy panel housing **10**, the first support part **100** and the second support part **200** each serving as a high strength type can be used.

[0134] As a result, the multifunction printer **1** can secure the strength to withstand the pressing force F**1** acting on the operation panel **18** without connecting the panel housing **10** to the upper housing **20**.

[0135] Accordingly, in the case of the multifunction printer **1**, it is required to design, manufacture, and store components for a plurality of types of the panel housing **10**, that is, the panel base **11** and the panel cover **12**, which have shapes that respectively match the different sizes of the operation panels **18**, whereas it is not required to design, manufacture, and store components for a plurality of types of the upper housing **20**, that is, the flat base **21** and the upper surface cover **22**, which have shapes that respectively match the different sizes of the operation panels **18**, and it is also not required to design, manufacture, and store components for a plurality of types of the connection parts **60**, that is, the join covers **59**, which have shapes that respectively match the different sizes of the operation panels **18**.

[0136] Accordingly, in the multifunction printer **1** of the embodiment, in a configuration in which the operation panels **18** having different sizes are formed to be integrated with the upper housing **20**, it is possible not only to secure the strength to withstand the pressing force F**1** applied to the operation panel **18** without connecting the panel housing **10** to the upper housing **20**, but also to reduce the number of housing components to be stored when a plurality of types of products are manufactured.

[0137] As a result, the multifunction printer **1** can reduce the waste of components. In the past, since the panel housing **10** was designed, manufactured, and stored according to a model change of a product, the panel housing **10** before the model change became unusable and had to be discarded. However, according to the present embodiment, the panel housing **10** before the model change can be used even after the model change. In other words, the multifunction printer **1** has high sustainability as sustainable development of the human, society, and global environment.

[0138] Furthermore, in this multifunction printer **1**, as illustrated in FIG. **9**, each of the first fitting parts **221** formed on the second support part **200** protrudes in the fitting direction. Each of the first fitted parts **121** formed on the first support part **100** is recessed in the fitting direction and is fitted into a corresponding one of the first fitting parts **221**. As illustrated in FIG. **12**, each of the second fitting parts **112** formed on the first support part **100** protrudes in the fitting direction. As illustrated in FIG. **10**, each of the second fitted parts **222** formed on the second support part **200** is recessed in the fitting direction and is fitted into a corresponding one of the second fitting parts **112**. The fitting direction is perpendicular to the pressing force F**1** applied to the operation panel **18**. With this configuration, the pressing force F**1** does not act in a direction to remove each of the first fitting parts **221** from each of the first fitted parts **121**, and does not act in a direction to remove each of the second fitting parts **112** from each of the second fitted parts **222**, so that the support part **19** can preferably receive the pressing force F**1**. Furthermore, in this multifunction printer **1**, a positional relationship between the first support part **100** and the second support part **200** is determined simply by fitting each of the first fitting parts **221** into a corresponding one of the first fitted parts **121** and fitting each of the second fitting parts **112** into a corresponding one of the second fitted parts **222**, thereby making it possible to simplify assembly work.

[0139] Furthermore, in the multifunction printer **1**, as illustrated in FIGS. **9** and **11**, in a state in which the first support part **100** and the second support part **200** are connected to each other, the first side surface **120**S of the first mounting part **120** and the second side surface **220**S of the second mounting part **220** come into abutment with each other in the width direction, and the bottom surface **120**D of

the first mounting part **120** and the upper surface **210**U of the second fixing part **210** face each other with the first gap G**1** in the upward-and-downward direction interposed therebetween. The first gap G**1** is set to a size that allows abutment when pressing force F**1** is applied to the operation panel **18**. With this configuration, even if the first support part **100** is twisted relative to the second support part **200** by the pressing force F**1** applied to the operation panel **18**, the first gap G**1** becomes zero and the bottom surface **120**D of the first mounting part **120** and the upper surface **210**U of the second fixing part **210** abut on each other, thereby being able to withstand the twisting. As a result, this multifunction printer **1** can suppress deformation of the support part **19**.

[0140] In addition, in the multifunction printer **1**, as illustrated in FIG. **9**, when the first support part **100** and the second support part **200** are connected to each other, the first mounting part **120** is located closer to one side in the width direction than to the second mounting part **220**. Each of the first fitting parts **221** protrudes from the second side surface **220**S of the second mounting part **220** toward one side in the width direction. Each of the first fitted parts **121** is recessed from the first side surface **120**S of the first mounting part **120** toward one side in the width direction and is fitted into a corresponding one of the first fitting parts **221**. As illustrated in FIG. **12**, each of the second fitting parts **112** protrudes from the first fixing part **110** toward the other side in the width direction. As illustrated in FIG. **10** and FIG. **11**, each of the second fitted parts **222** is located above the second side surface **220**S of the second mounting part **220** and is recessed in the other direction in the width direction from the printer portion **220**N located away from the second side surface **220**S in the other direction in the width direction so as to be fitted into a corresponding one of the second fitting parts **112**. The fitting direction is a direction toward one side in the width direction for each of the first fitting parts **221** and each of the first fitted parts **121**, and is a direction toward the other side in the width direction for each of the second fitting parts **112** and each of the second fitted parts **222**. With this configuration, even if the first support part **100** is twisted relative to the second support part **200** by the pressing force F**1** applied to the operation panel **18**, a connected configuration by fitting at a plurality of points can reliably withstand the twisting.

[0141] Furthermore, in the multifunction printer **1**, as illustrated in FIG. **9**, two sets of the first fitting parts **221** and the first fitted parts **121** are provided. In the rear set of the first fitting part **221** and the first fitted part **121**, the first fitting part **221** is a cylindrical protrusion, and the first fitted parts **121** is a hole having a cylindrical inner circumferential surface. In the front set of the first fitting part **221** and the first fitted part **121**, the first fitting part **221** is a protrusion having the abutment part **221**T, and the first fitted part **121** is a hole having the receiving part **121**T that receives the abutment part **221**T from below. These two sets of the first fitting parts **221** and the first fitted parts **121** allow a positional relationship between the first support part **100** and the second support part **200** to be determined with high accuracy.

[0142] Furthermore, in the multifunction printer **1**, as illustrated in FIG. **10**, the panel housing **10** is inclined such that the front end of the multifunction printer is located lower than the rear end thereof. Two sets of the second fitting parts **112** and the second fitted parts **222** are provided. The front set of the second fitting part **112** and the second fitted part **222** is located lower than the rear set of the second fitting part **112** and the second fitted part **222**. In this manner, by arranging the two sets of the second fitting parts **112** and the second fitted parts **222** with a step according to the inclination of the panel housing **10**, the pressing force F**1** applied to the operation panel **18** can be easily released to the base part **52** of the lower housing **50**.

[0143] Furthermore, in the multifunction printer **1**, as illustrated in FIG. **19**, the cover fixing part **85** that is fixed to the lower housing **50** is formed on the lower end side of the exterior cover **80**. As illustrated in FIG. **11** and FIG. **19**, the upper end side of the exterior cover **80** has two cover abutment parts **86** that abut on the first mounting part **120** in the width direction. As illustrated in FIG. **11**, the lower end of the opposing wall **11**W of the panel housing **10**, the upper end of the exterior cover **80**, and each cover protrusion **87** face each other with the second gap G**2** in the width direction interposed therebetween. The second gap G**2** is set to a size enabling abutment when the pressing force F**1** is applied biased toward one side in the width direction of the panel housing **10**. With this configuration, even if a portion of the panel housing **10** that overhangs on one side in the width direction is pressed such that the panel housing **10** is twisted, the second gap G**2** becomes zero such that the lower end of the opposing wall **11**W abuts on the upper end of the exterior cover **80** and each cover protrusion **87**, thereby making it possible to withstand the twisting. As a result, the multifunction printer **1** can suppress deformation of the panel housing **10**.

[0144] Furthermore, in the multifunction printer **1**, as illustrated in FIGS. **6** to **8**, the portion **12**B located on the rear and left end side of the panel cover **12** covers the front and left end corner of the upper surface cover **22** from above. This configuration makes it possible to prevent a boundary between the rear end of the panel cover **12** and the front end of the upper surface cover **22** of the upper housing **20** from being conspicuous. Additionally, this configuration makes it possible to reduce a sense of incongruity in design even if the operation panel **18** having a different size is formed to be integrated with the upper housing **20**.

[0145] Furthermore, in the multifunction printer **1**, as illustrated in FIGS. **9** and **10**, the first cover support part **231** and the second cover support part **232** are formed on the upper end edge of the cover part **230**, in which the first and second cover support parts abut on the panel housing **10** from below and support the panel housing **10**. With this configuration, even if the pressing force F**1** is applied to the operation panel **18**, the first cover support part **231** and the second cover support part **232** of the second support part **200** can suppress rattling of the panel housing **10**.

[0146] Furthermore, in the multifunction printer **1**, the first cover support part **231** is located away from the first support part **100** in the width direction perpendicular to the upward-and-downward direction and the forward-and-rearward direction, and extends in the forward-and-rearward direction. The second cover support part **232** is located in front of the first support part **100** and extends in the width direction. With this configuration, even if the pressing force F**1** is applied to the operation panel **18**, the first cover support part **231** and the second cover support part **232** can reliably suppress rattling of the panel housing **10**.

[0147] Furthermore, in the multifunction printer **1**, as illustrated in FIG. **9**, after the wire harness **10**W passes through the opening **11**H formed in the base part **11**B of the

panel housing **10**, the wire harness is guided by the guide parts **100**W**1**, **100**W**2**, and **100**W**3** of the first support part **100** and passes only through the first support part **100** of the support part **19**. Thereafter, the wire harness passes through the first connection part **60**L of the connection part **60** and is routed to the inside of the lower housing **50**. In other words, the wire harness **10**W does not pass through the second support part **200** that is fixed to the base part **52** of the lower housing **50**. Therefore, by fixing the first support part **100** to the panel housing **10** and assembling the first support part **100** with the second support part **200** in a state in which the guide parts **100**W**1**, **100**W**2**, and **100**W**3** of the first support part **100** guide the wire harness **10**W, the work of routing the wire harness **10**W to the inside of the lower housing **50** can be simplified.

[0148] While the invention has been described in conjunction with various example structures outlined above and illustrated in the figures, various alternatives, modifications, variations, improvements, and/or substantial equivalents, whether known or that may be presently unforeseen, may become apparent to those having at least ordinary skill in the art. Accordingly, the example embodiments of the disclosure, as set forth above, are intended to be illustrative of the invention, and not limiting the invention. Various changes may be made without departing from the spirit and scope of the disclosure. Therefore, the disclosure is intended to embrace all known or later developed alternatives, modifications, variations, improvements, and/or substantial equivalents. Some specific examples of potential alternatives, modifications, or variations in the described invention are provided below:

[0149] In the embodiments, the fitting direction is parallel to the width direction, but the present disclosure is not limited to this configuration. For example, the fitting direction may be parallel to the forward-and-rearward direction.

What is claimed is:

1. A multifunction printer comprising:

an image forming unit configured to form an image on a sheet;

an image reading unit configured to read an image of a document;

an operation panel configured to receive an operation input;

a lower housing configured to house the image forming unit;

an upper housing configured to house the image reading unit, the upper housing being located above the lower housing;

a panel housing configured to house the operation panel, the panel housing being located above the lower housing and located in front of the upper housing;

a connection part connecting the lower housing to the upper housing; and

a support part configured to support the panel housing, the support part being located between the lower housing and the panel housing in an upward-and-downward direction, the support part being located in front of the upper housing and the connection part,

wherein the support part includes:

a first support part fixed to the panel housing; and

a second support part fixed to the lower housing and configured to be connected to the first support part.

2. The multifunction printer according to claim **1**,

wherein the support part includes:

a fitting part formed on one of the first support part and the second support part, the fitting part protruding in a fitting direction perpendicular to a first direction in which the operation panel is pressed; and

a fitted part formed in an other of the first support part and the second support part, the fitted part being recessed in the fitting direction so as to be fitted into the fitting part.

3. The multifunction printer according to claim **2**,

wherein the first support part includes:

a first fixing part extending along the panel housing, the first fixing part being fixed to the panel housing; and

a first mounting part connected to the first fixing part, the first mounting part extending toward the lower housing,

the second support part includes:

a second fixing part extending along the lower housing, the second fixing part being fixed to the lower housing; and

a second mounting part connected to the second fixing part, the second mounting part extending toward the panel housing,

in a state where the first support part and the second support part are connected to each other, a first side surface of the first mounting part and a second side surface of the second mounting part abut on each other in a second direction parallel to the fitting direction, and a bottom surface of the first mounting part and an upper surface of the second fixing part face each other across a first gap in an upward-and-downward direction, and

the first gap is set to a size in which the bottom surface of the first mounting part is configured to abut on the upper surface of the second fixing part in a case where the operation panel is pressed in the first direction.

4. The multifunction printer according to claim **3**,

wherein in a state where the first support part and the second support part are connected to each other, the first mounting part is located closer to one side in the second direction than is the second mounting part,

the fitting part includes:

a first fitting part protruding from the second side surface of the second mounting part toward the one side in the second direction; and

a second fitting part protruding from the first fixing part toward the other side in the second direction,

the fitted part includes:

a first fitted part recessed from the first side surface of the first mounting part toward the one side in the second direction, the first fitted part being fitted into the first fitting part; and

a second fitted part recessed from a portion of the second mounting part, the portion being located above the second side surface, toward the other side in the second direction, the second fitted part being fitted into the second fitting part, and

the fitting direction is a direction toward the one side in the second direction in the first fitting part and the first fitted part, and is a direction toward the other side in the second direction in the second fitting part and the second fitted part.

5. The multifunction printer according to claim **4**,
wherein the multifunction printer includes two pairs of the first fitting part and the first fitted part,
in one pair of the first fitting part and the first fitted part, the first fitting part is a cylindrical protrusion, and the first fitted part is a hole having a cylindrical inner circumferential surface, and
in an other pair of the first fitting part and the first fitted part, the first fitting part is a protrusion having an abutment part, wherein a part of an outer circumferential surface of the first fitting part is formed in a flat shape so as to form the abutment part, and the first fitted part is a hole having a receiving part configured to receive the abutment part from below, wherein a part of an inner circumferential surface of the first fitted part is formed in a flat shape so as to form the abutment part.

6. The multifunction printer according to claim **4**,
wherein the panel housing is inclined such that a front end of the panel housing is located lower than a rear end of the panel housing,
the second direction is a width direction perpendicular to the upward-and-downward direction and a forward-and-rearward direction,
the multifunction printer includes two pairs of the second fitting part and the second fitted part, and
one pair of the second fitting part and the second fitted part is located in front of and below an other pair of the second fitting part and the second fitted part.

7. The multifunction printer according to claim **3**,
wherein the second direction is the width direction perpendicular to the upward-and-downward direction and the forward-and-rearward direction, and
in a state where the first support part and the second support part are connected to each other, the first mounting part is located closer to the one side in the width direction than is the second mounting part,
the multifunction printer further comprising an exterior cover located closer to the one side in the width direction than is the connection part, the first support part, and the second support part, the exterior cover extending in the upward-and-downward direction and the forward-and-rearward direction,
wherein the exterior cover includes a cover fixing part formed on a lower end side of the exterior cover, the cover fixing part being fixed to the lower housing,
the exterior cover includes a cover abutment part formed on an upper end side of the exterior cover, the cover abutment part abutting on the first mounting part in the width direction,
the panel housing includes:
a base part to which the first fixing part is fixed; and
an opposing wall located closer to the one side in the width direction than is the upper end of the exterior cover, the opposing wall protruding downwards and extending in the forward-and-rearward direction,
a lower end of the opposing wall and the upper end of the exterior cover face each other across a second gap in the width direction, and
the second gap is set to a size in which the upper end of the exterior cover abuts on the lower end of the opposing wall in a case where pressing force in the first direction is applied biased toward the one side in the width direction of the panel housing.

8. The multifunction printer according to claim **1**,
wherein the image reading unit includes a document glass disposed on an upper surface of the upper housing, the document glass including a document placement surface on which the document to be read is placed,
the upper housing includes an upper surface cover covering an outer circumferential edge of the document glass,
the panel housing includes a panel cover covering an outer circumferential edge of the operation panel, and
a part of a rear end side of the panel cover is configured to cover, from above, a part of a front end side of the upper surface cover.

9. The multifunction printer according to claim **1**,
wherein the second support part includes a cover part forming an exterior surface of the second support part, and
the cover part includes a cover support part formed at an upper end edge of the cover part, the cover support part abutting on the panel housing from below and supporting the panel housing.

10. The multifunction printer according to claim **9**,
wherein the cover support part includes:
a first cover support part located away from the first support part in the width direction perpendicular to the upward-and-downward direction and the forward-and-rearward direction, the first cover support part extending in the forward-and-rearward direction; and
a second cover support part located in front of the first support part, the second cover support part extending in the width direction.

11. The multifunction printer according to claim **1**, further comprising a wire harness that is an assembly of a plurality of electrical wirings connected to the operation panel,
wherein the wire harness passes through an opening formed in a bottom wall of the panel housing, then passes through only the first support part of the support part, and further passes through the connection part so as to be routed to an inside of the lower housing, and
the first support part includes a guide part configured to guide the wire harness.

* * * * *