US 20250279751A1

(19) United States
(12) Patent Application Publication
Tomita et al.
(10) Pub. No.: US 2025/0279751 A1
(43) Pub. Date: Sep. 4, 2025

(54) **TRACKER MODULE AND COMMUNICATION DEVICE**

(71) Applicant: **Murata Manufacturing Co., Ltd.**, Nagaokakyo-shi (JP)

(72) Inventors: **Naohide Tomita**, Nagaokakyo-shi (JP); **Kenzou Oomori**, Nagaokakyo-shi (JP); **Toshiki Matsui**, Nagaokakyo-shi (JP)

(21) Appl. No.: **19/212,907**

(22) Filed: **May 20, 2025**

Related U.S. Application Data

(63) Continuation of application No. PCT/JP2023/044482, filed on Dec. 12, 2023.

(30) **Foreign Application Priority Data**

Dec. 22, 2022 (JP) 2022-205886

Publication Classification

(51) **Int. Cl.**
H03F 1/02 (2006.01)
H03F 3/24 (2006.01)

(52) **U.S. Cl.**
CPC ***H03F 1/0211*** (2013.01); ***H03F 3/245*** (2013.01); *H03F 2200/102* (2013.01); *H03F 2200/451* (2013.01)

(57) **ABSTRACT**

An ET module is provided that includes a laminate having a rectangular shape; first and second external output terminals on the module laminate; and a voltage supply circuit that supplies a power supply voltage V_{ET4} to a first PA module via the first external output terminal and also simultaneously supplies a power supply voltage V_{ET4} to a second PA module via the second external output terminal. The module laminate has first and second sides that form at least a part of an outer shape of the laminate. The first external output terminal is adjacent to the first side, and the second external output terminal is adjacent to the second side. In a plan view of the module laminate, the first and second external output terminals are disposed asymmetrically with respect to a line passing through a midpoint M of the module laminate and parallel to the first and second sides.

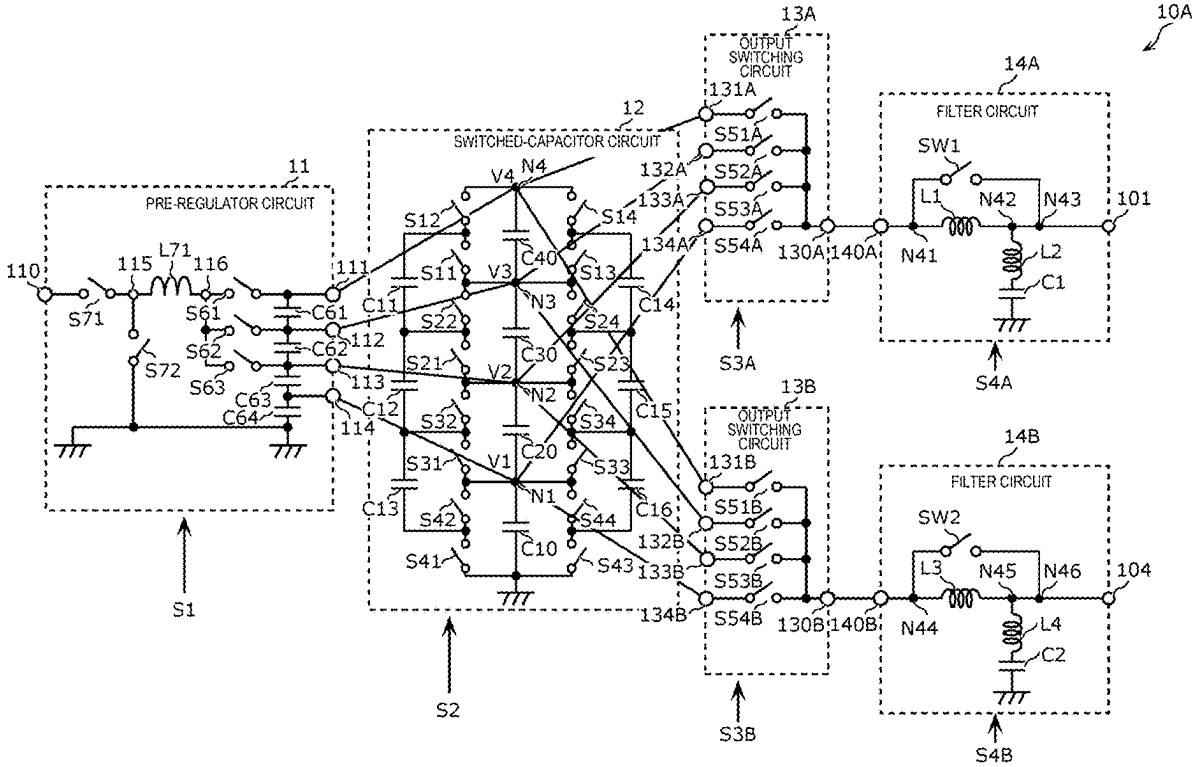

FIG. 1A

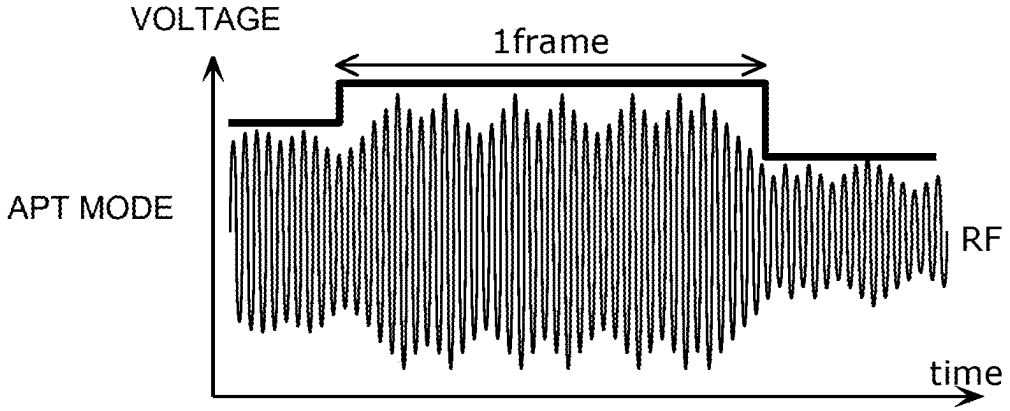

FIG. 1B

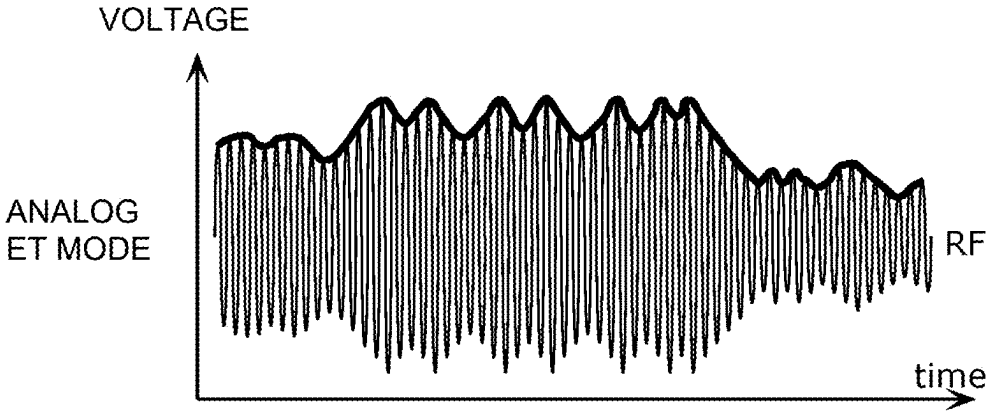

FIG. 1C

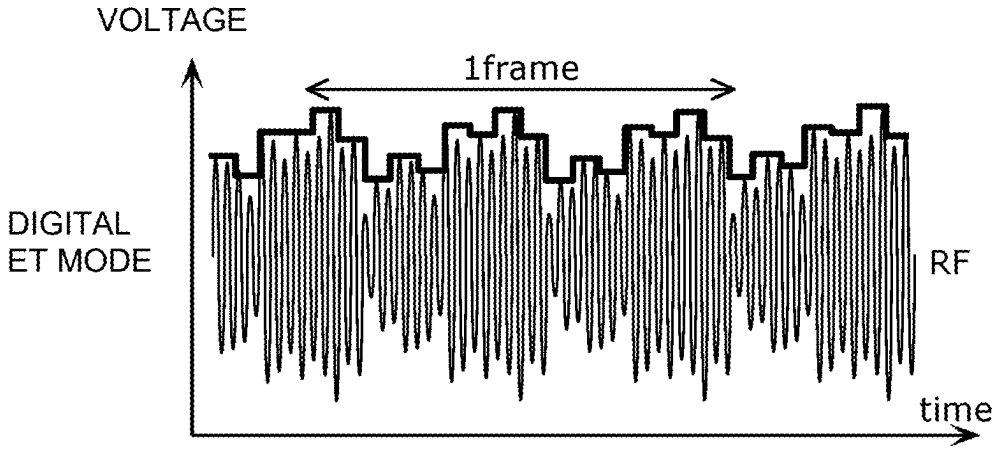

FIG. 2

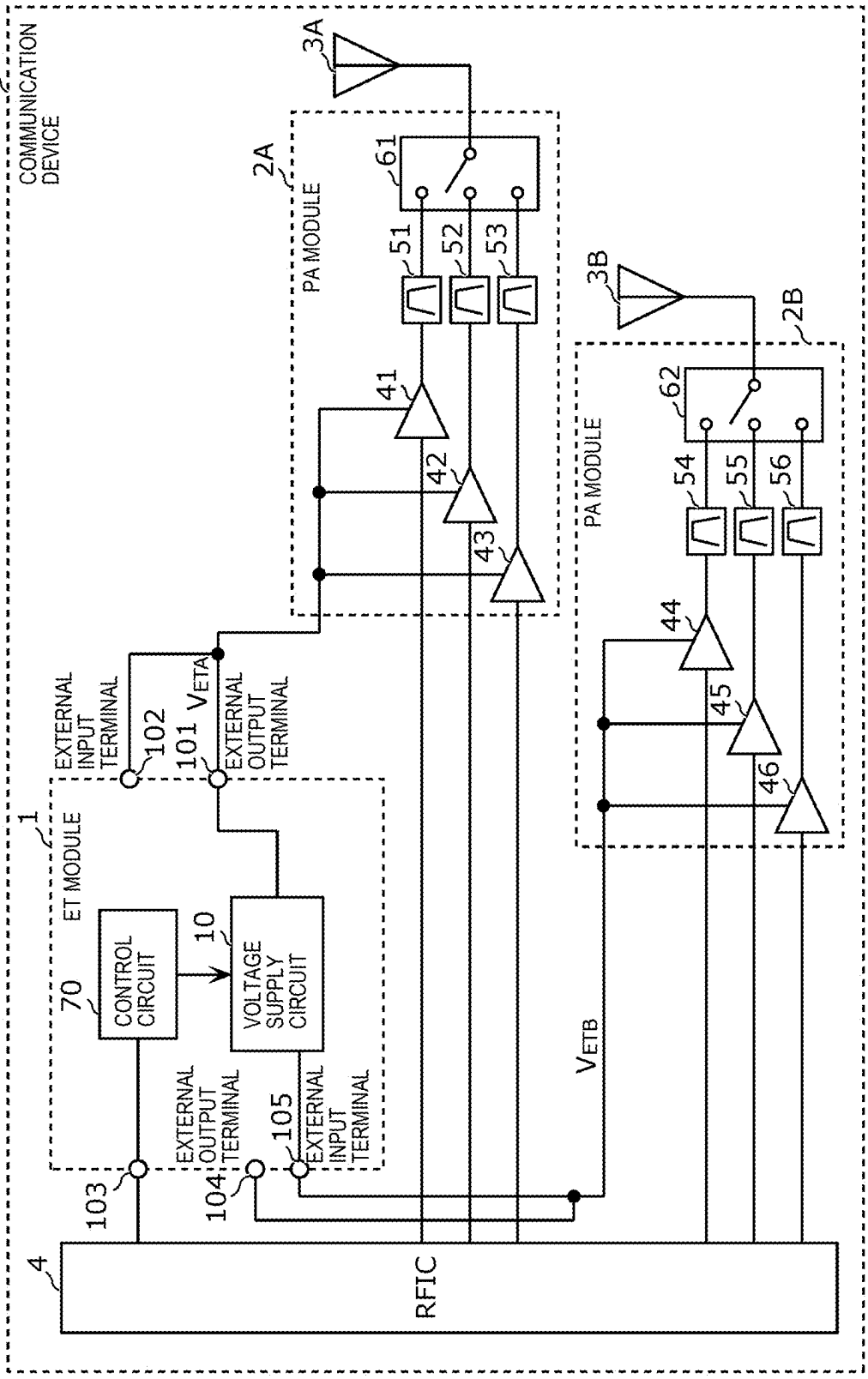
5
COMMUNICATION DEVICE
3A
2A
PA MODULE
61
51
52
53
41
42
43
3B
2B
62
PA MODULE
54
55
56
44
45
46
EXTERNAL INPUT TERMINAL
102
101
VETA
EXTERNAL OUTPUT TERMINAL
1
ET MODULE
70
CONTROL CIRCUIT
10
VOLTAGE SUPPLY CIRCUIT
EXTERNAL OUTPUT TERMINAL
105
EXTERNAL INPUT TERMINAL
103
104
VETB
4
RFIC

FIG. 3

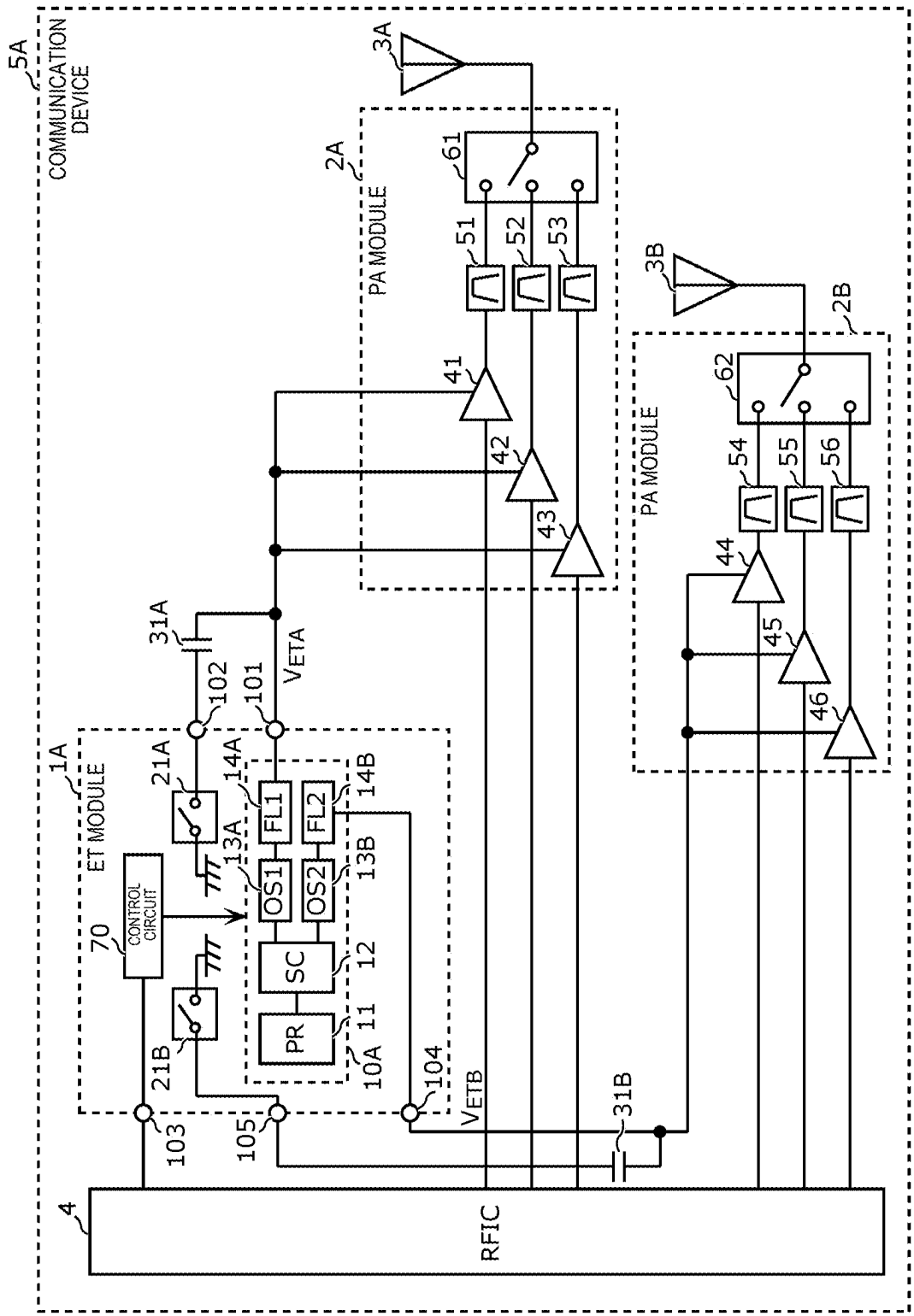
5A
COMMUNICATION DEVICE
3A
2A
PA MODULE
61
51
52
53
41
42
43
3B
2B
62
PA MODULE
54
55
56
44
45
46
31A
102
101
V_{ETA}
1A
ET MODULE
21A
14A
FL1
FL2
14B
13A
OS1
OS2
13B
70
CONTROL CIRCUIT
SC
12
PR
11
10A
21B
104
V_{ETB}
31B
103
105
4
RFIC

FIG. 4

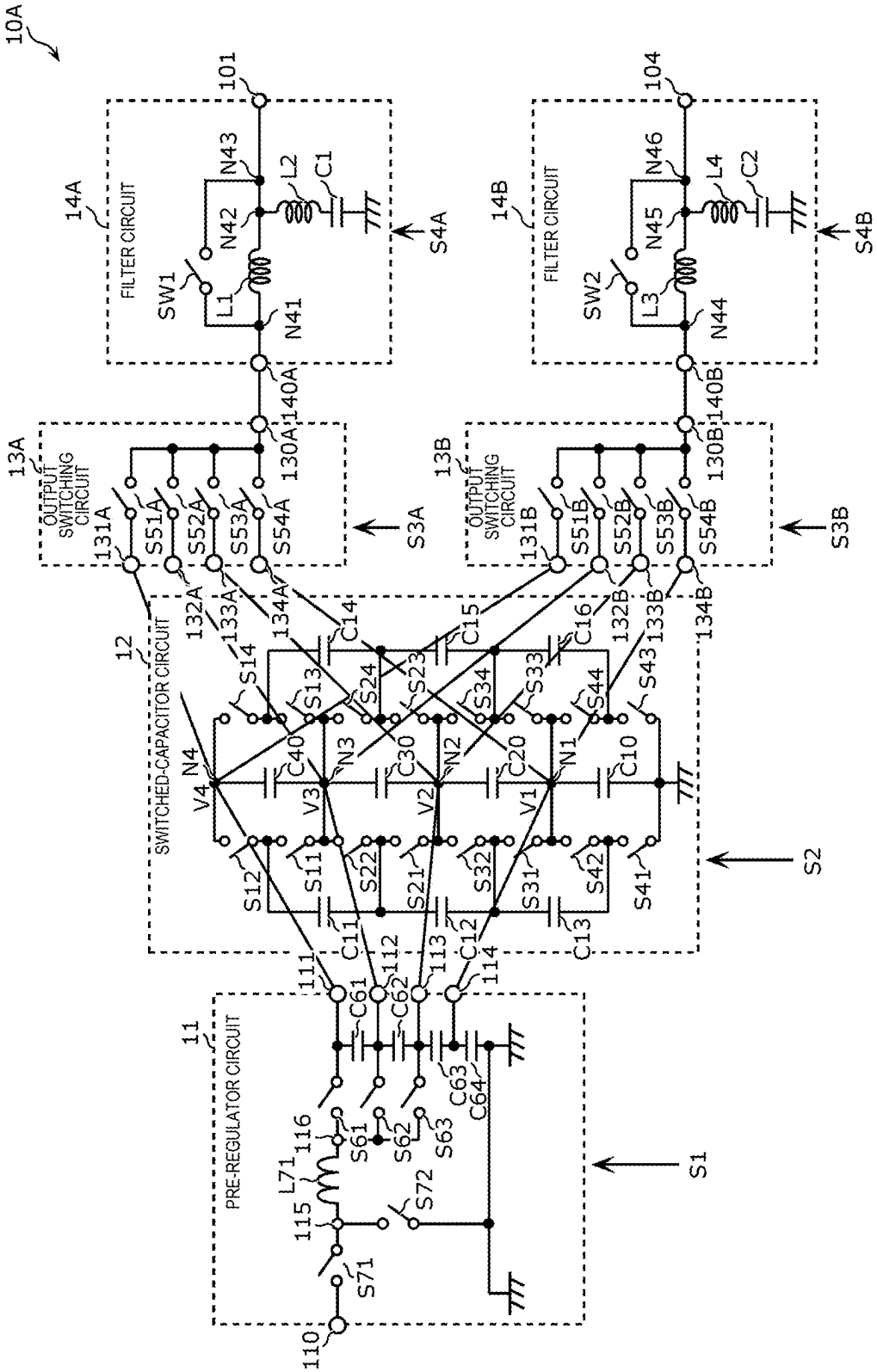
10A
101
104
14A
FILTER CIRCUIT
14B
FILTER CIRCUIT
SW1
SW2
L1
L2
L3
L4
C1
C2
N41
N42
N43
N44
N45
N46
S4A
S4B
140A
140B
130A
130B
13A
OUTPUT SWITCHING CIRCUIT
13B
OUTPUT SWITCHING CIRCUIT
131A
131B
S51A
S52A
S53A
S54A
S51B
S52B
S53B
S54B
S3A
S3B
132A
133A
134A
132B
133B
134B
12
SWITCHED-CAPACITOR CIRCUIT
C14
C15
C16
S14
S13
S24
S23
S34
S33
S44
S43
N4
N3
N2
N1
C40
C30
C20
C10
V4
V3
V2
V1
S12
S11
S22
S21
S32
S31
S42
S41
C11
C12
C13
S2
111
112
113
114
C61
C62
C63
C64
11
PRE-REGULATOR CIRCUIT
116
L71
115
110
S61
S62
S63
S72
S71
S1

FIG. 5

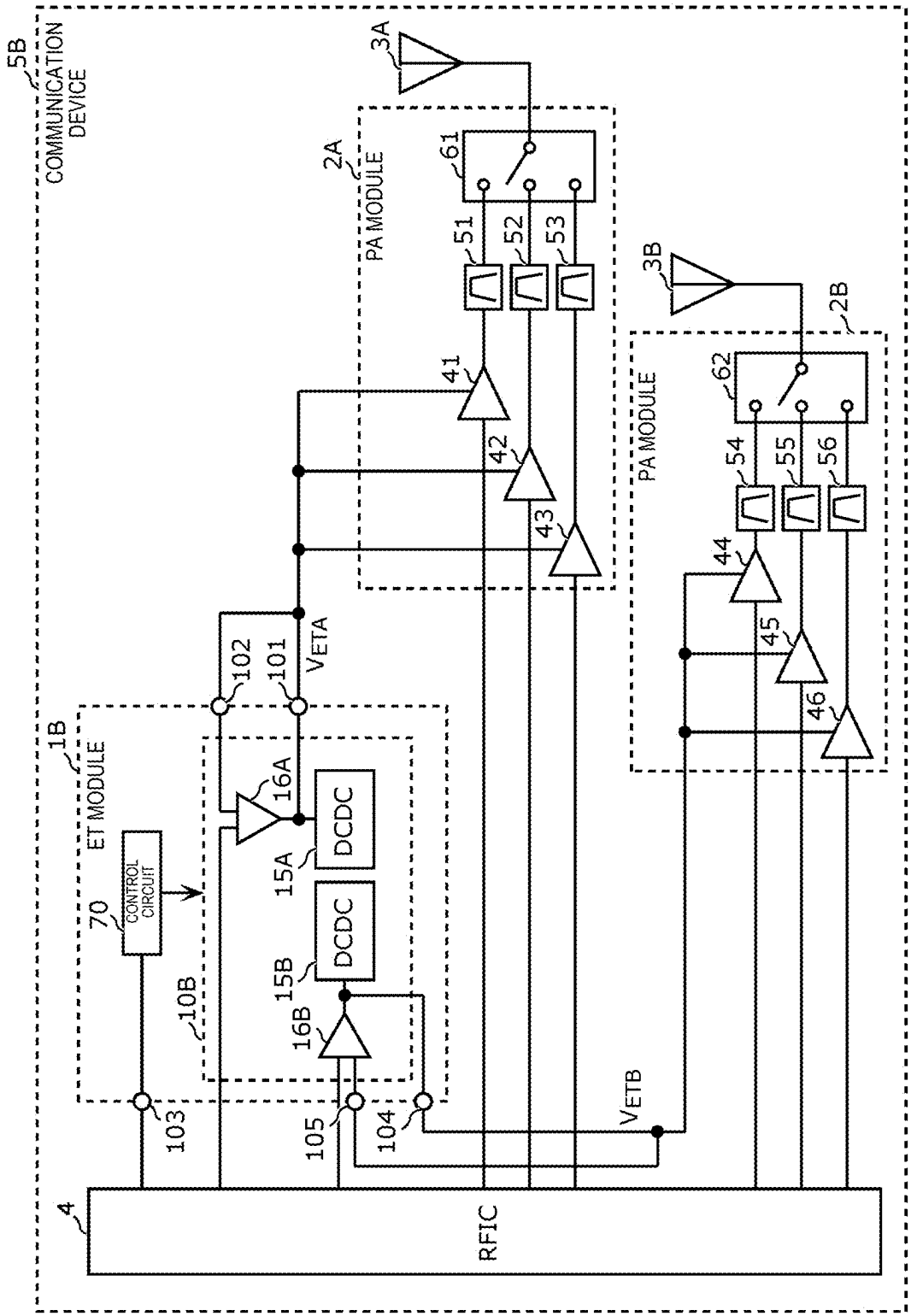
5B
COMMUNICATION DEVICE
3A
2A
PA MODULE
61
51
52
53
41
42
43
3B
2B
PA MODULE
62
54
55
56
44
45
46
102
101
V_{ETA}
1B
ET MODULE
16A
DCDC
15A
DCDC
15B
16B
70
CONTROL CIRCUIT
10B
103
105
104
V_{ETB}
4
RFIC

FIG. 6A

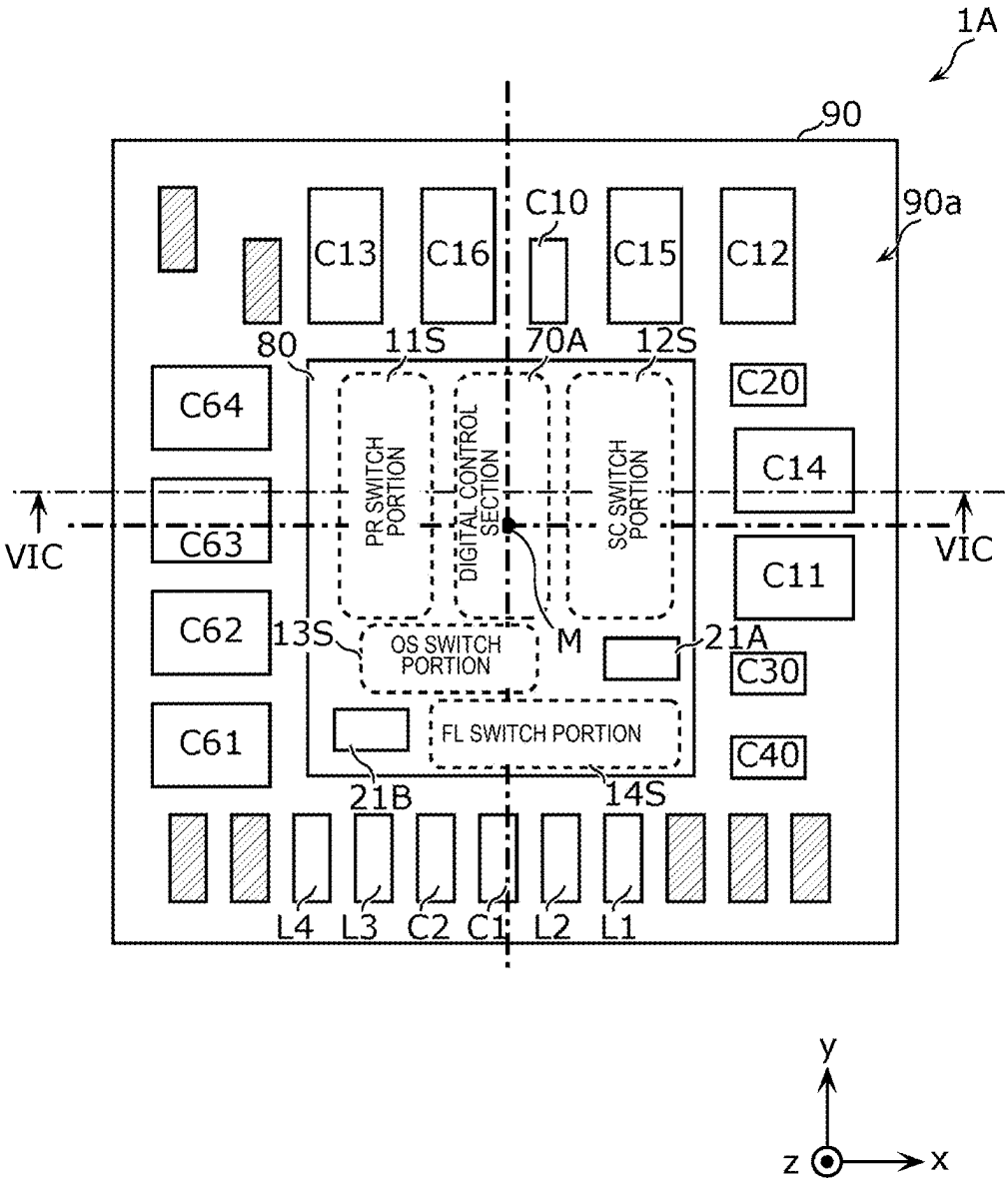
1A
90
90a
C10
C13
C16
C15
C12
80
11S
70A
12S
C20
C64
PR SWITCH PORTION
DIGITAL CONTROL SECTION
SC SWITCH PORTION
C14
VIC
C63
VIC
C11
C62
13S
OS SWITCH PORTION
M
21A
C30
C61
FL SWITCH PORTION
C40
21B
14S
L4
L3
C2
C1
L2
L1
y
z
x

FIG. 6B

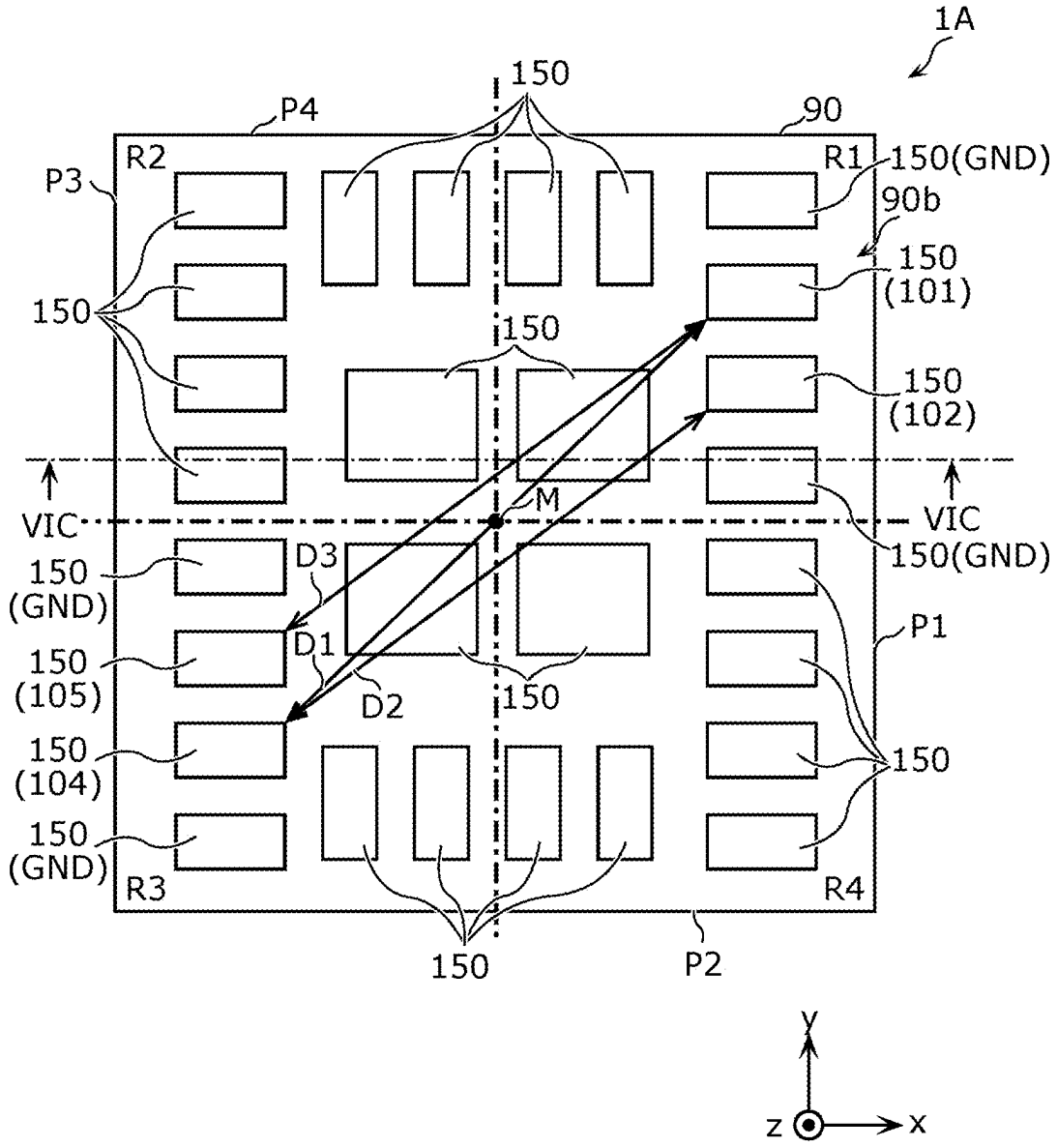
1A
150
P4
90
R2
R1
150(GND)
P3
90b
150
(101)
150
150
150
(102)
VIC
M
VIC
150(GND)
150
(GND)
D3
D1
P1
150
(105)
D2
150
150
150
(104)
150
150
(GND)
R3
R4
150
P2
y
z
x

FIG. 6C

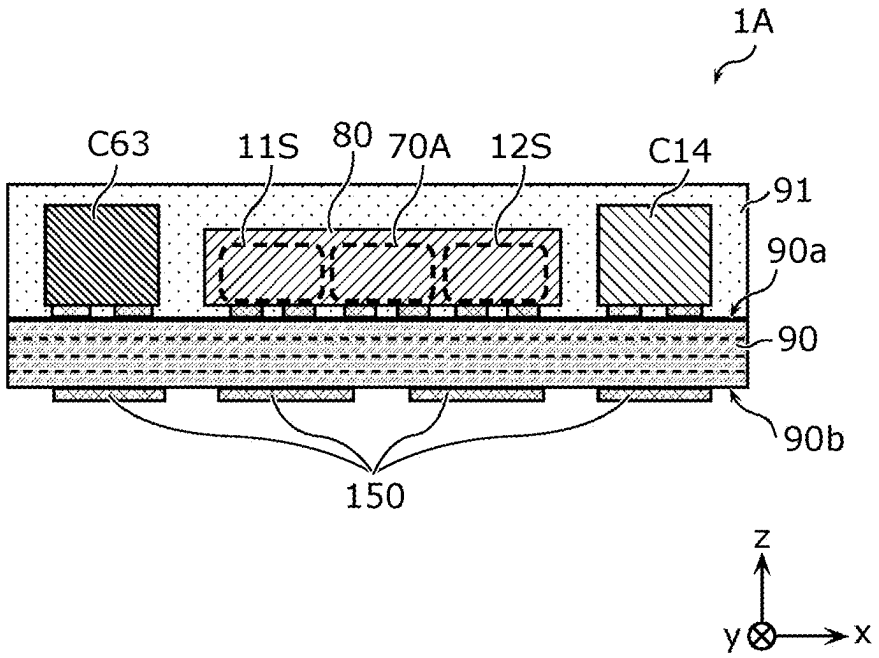

FIG. 7

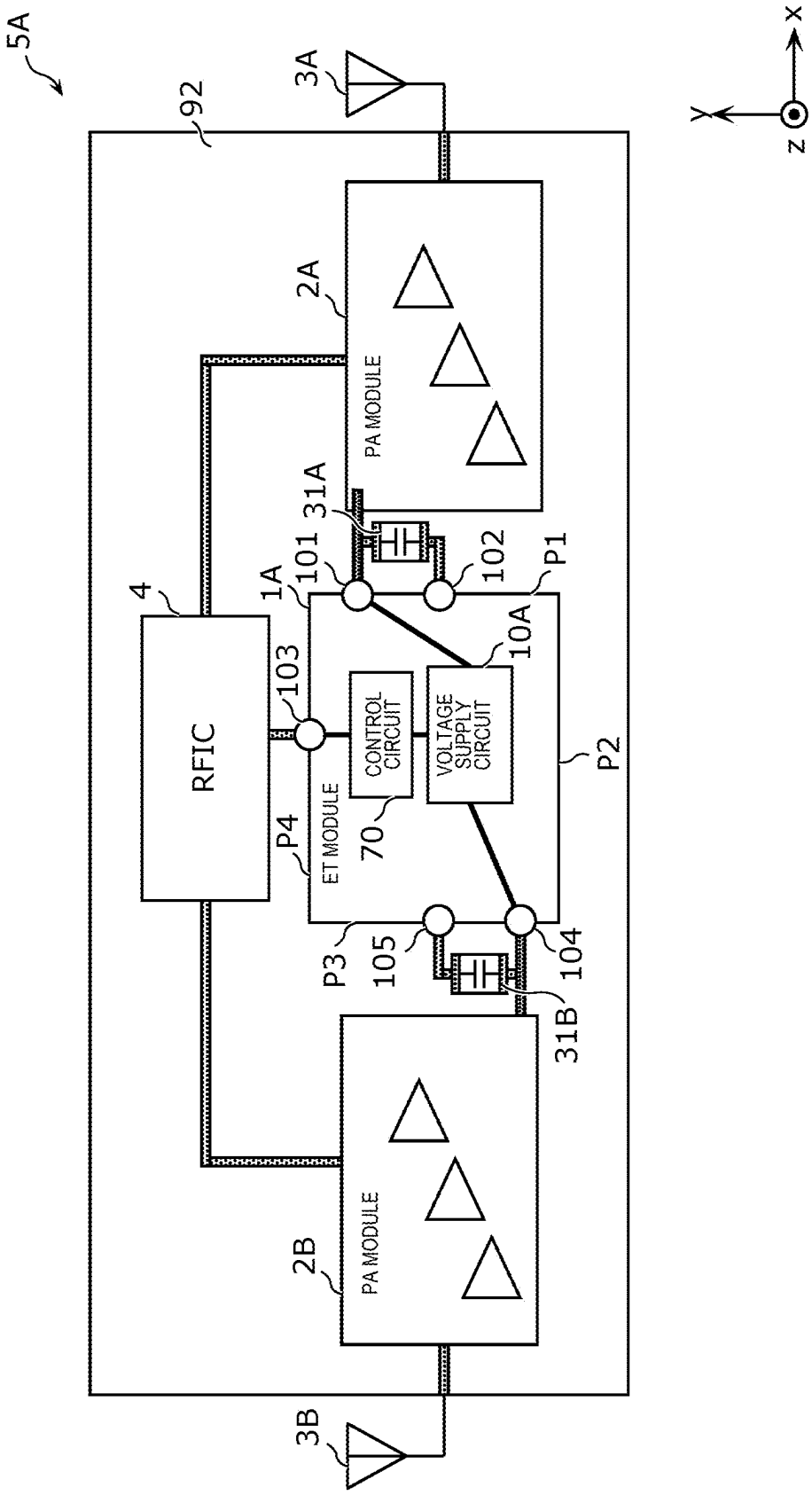
5A
92
3A
2A
PA MODULE
31A
101
102
P1
1A
4
RFIC
103
CONTROL CIRCUIT
VOLTAGE SUPPLY CIRCUIT
10A
P2
P4
ET MODULE
70
P3
105
104
31B
2B
PA MODULE
3B
x
y
z

FIG. 8

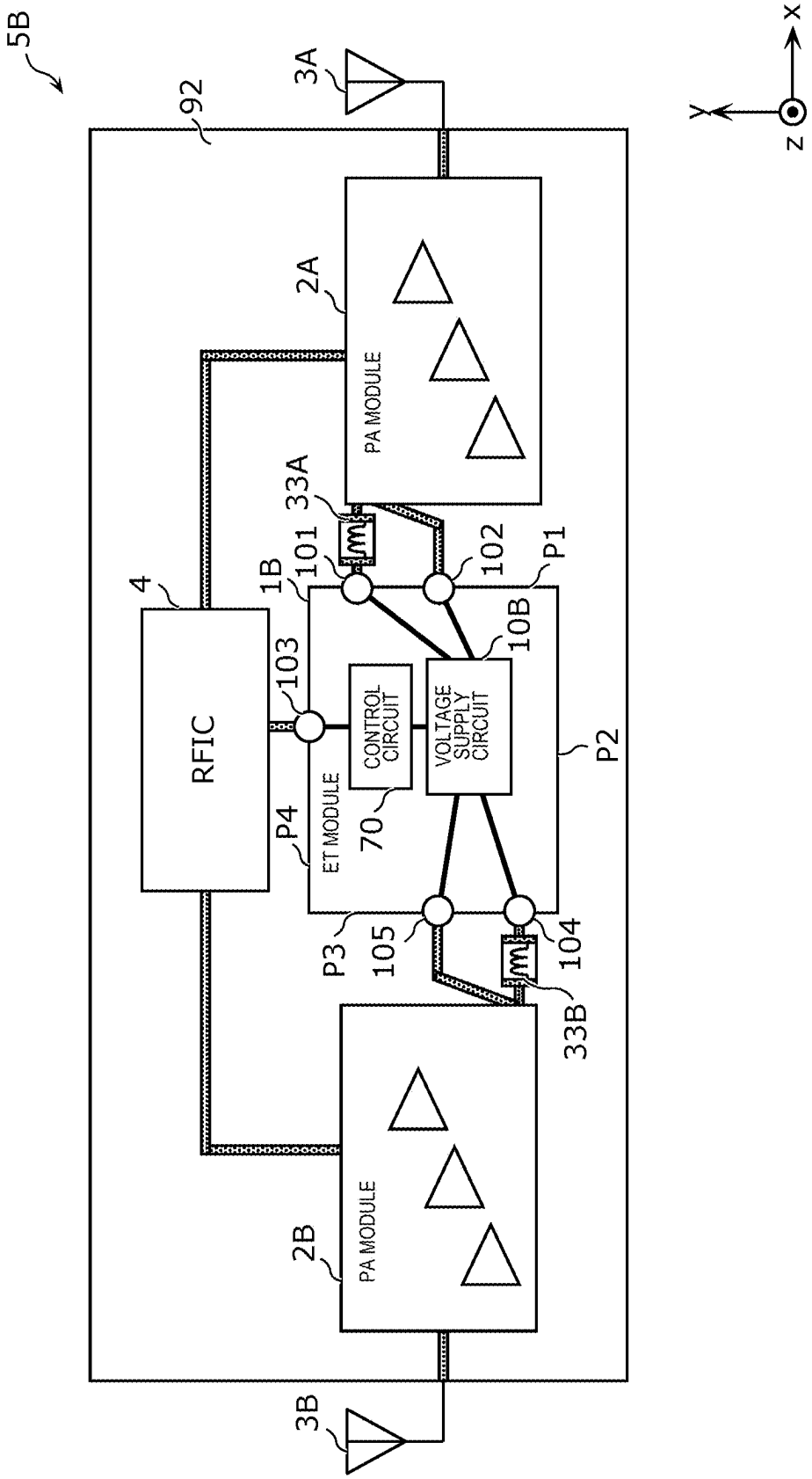
5B
92
3A
2A
PA MODULE
33A
101
1B
102
P1
4
RFIC
103
10B
CONTROL CIRCUIT
VOLTAGE SUPPLY CIRCUIT
P2
P4
ET MODULE
70
P3
105
104
33B
2B
PA MODULE
3B
X
Y
Z

TRACKER MODULE AND COMMUNICATION DEVICE

CROSS REFERENCE TO RELATED APPLICATIONS

[0001] This application is a continuation of International Application No. PCT/JP2023/044482, filed Dec. 12, 2023, which claims priority to Japanese Patent Application No. 2022-205886, filed Dec. 22, 2022, the contents of each of which are hereby incorporated by reference in their entirety.

TECHNICAL FIELD

[0002] The present disclosure relates to a tracker module and a communication device.

BACKGROUND

[0003] In recent years, a power added efficiency (hereinafter referred to as "efficiency") has been improved by application of envelope tracking (ET: Envelope Tracking) to a power amplifier circuit. In ET systems, for example, a digital ET technology for supplying a plurality of discrete voltages has been disclosed.

[0004] For example, U.S. Pat. No. 9,755,672 discloses a supply modulator (e.g., a tracker circuit) that supplies a power supply voltage to a power amplifier circuit based on an envelope signal. The supply modulator described therein includes a magnetic converter circuit (Magnetic Regulation Stage: Pre-regulator circuit) that converts a voltage; a switched-capacitor circuit (Switched-Capacitor Voltage Balance Stage) that generates, from the voltage, a plurality of voltages having different voltage levels; and an output switching circuit (Output Switching Stage) that selects and outputs at least one of the plurality of voltages. The magnetic converter circuit includes a switch and a power inductor, the switched-capacitor circuit includes a switch and a capacitor, and the output switching circuit includes a switch.

[0005] However, when a tracker circuit is modularized in an ET system, efficiency of the tracker circuit may deteriorate depending on an arrangement configuration of a voltage output path that outputs a voltage from the tracker circuit to a power amplifier circuit and a voltage input path that inputs the above voltage from the voltage output path to the tracker circuit.

SUMMARY OF THE INVENTION

[0006] In view of the foregoing, it is an object of the present disclosure to provide a tracker module and a communication device that minimizes efficiency deterioration.

[0007] In an exemplary aspect, a tracker module is provided that includes a module laminate having a rectangular shape; a first external output terminal and a second external output terminal disposed on the module laminate; and a voltage supply circuit disposed on the module laminate and configured to supply a first voltage based on an envelope signal to a first power amplifier via the first external output terminal, and to simultaneously supply a second voltage based on an envelope signal to a second power amplifier via the second external output terminal. The module laminate has a first side and a second side facing the first side. The first side and the second side form at least a part of an outer shape of the module laminate in plan view of the module laminate. Moreover, the first external output terminal is disposed adjacent to the first side, and the second external output terminal is disposed adjacent to the second side. In the plan view of the module laminate, the first external output terminal and the second external output terminal are disposed asymmetrically with respect to a line passing through a midpoint of the module laminate and parallel to the first side and the second side.

[0008] In another exemplary aspect, a tracker module is provided that includes a module laminate having a rectangular shape; a first external output terminal and a second external output terminal disposed on the module laminate; and a voltage supply circuit including at least one integrated circuit disposed on the module laminate. The at least one integrated circuit includes at least one switch included in a switched-capacitor circuit, at least one switch included in a first output switching circuit, and at least one switch included in a second output switching circuit, the switched-capacitor circuit is configured to generate a plurality of discrete voltages based on an input voltage and to output the generated plurality of discrete voltages to the first output switching circuit and the second output switching circuit, the first output switching circuit is configured to selectively output at least one of the plurality of generated discrete voltages to a first power amplifier via the first external output terminal, and the second output switching circuit is configured to selectively output at least one of the generated plurality of discrete voltages to a second power amplifier via the second external output terminal. Moreover, the module laminate has a first side and a second side facing the first side. The first side and the second side form at least a part of an outer shape of the module laminate in plan view of the module laminate. The first external output terminal is disposed adjacent to the first side, the second external output terminal is disposed adjacent to the second side, and in the plan view of the module laminate, the first external output terminal and the second external output terminal are disposed asymmetrically with respect to a line passing through a midpoint of the module laminate and parallel to the first side and the second side.

[0009] In yet another exemplary aspect, a tracker module is provided that includes a module laminate having a rectangular shape; a first external output terminal, a second external output terminal, and a first external terminal disposed on the module laminate; and a voltage supply circuit including at least one integrated circuit disposed on the module laminate. The at least one integrated circuit includes at least one switch included in a switched-capacitor circuit, at least one switch included in a first output switching circuit, and at least one switch included in a second output switching circuit. The switched-capacitor circuit is configured to generate a plurality of discrete voltages based on an input voltage and to output the generated plurality of discrete voltages to the first output switching circuit and the second output switching circuit. The first output switching circuit is configured to selectively output at least one of the generated plurality of discrete voltages to a first power amplifier via the first external output terminal, and the second output switching circuit is configured to selectively output at least one of the generated plurality of discrete voltages to a second power amplifier via the second external output terminal. The module laminate has a first side and a second side facing the first side. The first side and the second side form at least a part of an outer shape of the module laminate in a plan view of the module laminate. The first external output terminal and the first external terminal are

disposed adjacent to the first side, the second external output terminal is disposed on the second side, and a distance between the first external output terminal and the second external output terminal is longer than a distance between the second external output terminal and the first external terminal.

[0010] According to the exemplary aspects of the present disclosure, a tracker module and a communication device are provided that suppresses or minimizes efficiency deterioration.

BRIEF DESCRIPTION OF DRAWINGS

[0011] FIG. **1**A is a graph illustrating an example of a transition in a power supply voltage in an average power tracking (APT: Average Power Tracking) mode.

[0012] FIG. **1**B is a graph illustrating an example of a transition in a power supply voltage in an analog ET mode.

[0013] FIG. **1**C is a graph illustrating an example of a transition in a power supply voltage in a digital ET mode.

[0014] FIG. **2** is a circuit configuration diagram of a tracker module and a communication device according to an exemplary embodiment.

[0015] FIG. **3** is a circuit configuration diagram of a tracker module and a communication device according to Example 1.

[0016] FIG. **4** is a diagram of circuit configurations of a pre-regulator circuit, a switched-capacitor circuit, output switching circuits, and filter circuits according to Example 1.

[0017] FIG. **5** is a circuit configuration diagram of a tracker module and a communication device according to Example 2.

[0018] FIG. **6**A is a plan view of the tracker module according to Example 1.

[0019] FIG. **6**B is a plan view of the tracker module according to Example 1.

[0020] FIG. **6**C is a cross-sectional view of the tracker module according to Example 1.

[0021] FIG. **7** is a plan view of the communication device according to Example 1.

[0022] FIG. **8** is a plan view of the communication device according to Example 2.

DETAILED DESCRIPTION OF EMBODIMENTS

[0023] In the following, embodiments of the present disclosure are described in detail with reference to the drawings. All embodiments to be described below illustrate comprehensive and specific examples. Numeric values, shapes, materials, components, and an arrangement and a connection form of the components, which are described in the following embodiments, are merely examples and are not intended to limit the exemplary aspects of the present disclosure.

[0024] It is noted that each figure is a schematic diagram that is appropriately emphasized, omitted, or subjected to ratio adjustment in order to illustrate the exemplary aspects of the present disclosure. It should be appreciated that each figure is not necessarily a strict illustration and may differ from an actual shape, a positional relationship, or a ratio. In each figure, an identical numeral is given to a substantially identical configuration, and an overlapping description may be omitted or simplified.

[0025] In each figure below, an x-axis and a y-axis are axes orthogonal to each other on a plane parallel to a main surface of a board. Specifically, for an exemplary aspect when a board has a rectangular shape in plan view, the x-axis is parallel to a first side of the board, and the y-axis is parallel to a second side that is orthogonal to the first side of the board. In addition, a z-axis is an axis perpendicular to the main surface of the board, a positive direction of which indicates an upward direction and a negative direction of which indicates a downward direction.

[0026] In a circuit configuration of the present disclosure, the phrase "to be connected" includes a case where a connection terminal and/or a wiring conductor is directly connected, and a case in which a connection terminal and/or a wiring conductor is electrically connected via another circuit element. Moreover, the phrase "to be connected between A and B" can refer to a connection with both A and B between A and B.

[0027] In a component arrangement of the present disclosure, the phrase "a component disposed in or on a board" can refer to a component being disposed on a main surface of a board and a component being disposed in a board. Moreover, the phrase "a component being disposed on a main surface of a board" includes not only a component being disposed in contact with a main surface of a board, but also a component being disposed above the main surface without being in contact therewith (for example, a component being laminated on another component that is disposed in contact with a main surface). In addition, the phrase "a component being disposed on a main surface of a board" may include a component being disposed in a recessed portion formed on a main surface. The phrase "a component being disposed in a board" includes not only a component being encapsuled within a board but also an entire component being disposed between both main surfaces of a board, but a portion of the component not being covered with the board, and only a portion of the component being disposed in the board.

[0028] In the component arrangement of the present disclosure, the phrase "in plan view of a board" can refer to viewing, from a z-axis positive side, an object or component orthographically projected on an xy-plane. The phrase "A overlapping with B in plan view" can mean that at least a portion of a region of A orthographically projected on the xy-plane overlaps with at least a portion of a region of B orthographically projected on the xy-plane. In addition, the phrase "A being disposed between B and C" can mean that at least one of a plurality of line segments connecting an arbitrary point in B and an arbitrary point in C passes through A.

[0029] In addition, in the component arrangement of the present disclosure, the phrase "A being disposed adjacent to B" represents that A and B are disposed in proximity, and specifically can mean that no other circuit component is present in a space in which A faces B. In other words, "A being disposed adjacent to B" can mean that none of a plurality of line segments reaching B, from an arbitrary point on a surface of A facing B, along a normal direction of the surface, passes through any circuit component other than A and B. Here, a circuit component can refer to a component including an active element and/or a passive element. More specifically, a circuit component includes an active component including a transistor or a diode, or the like, and a passive component including an inductor, a transformer, a capacitor, or a resistor, or the like, and does not include an electromechanical component including a terminal, a connector, or a wiring line, or the like.

[0030] In the exemplary aspects of the present disclosure, a "terminal" can refer to a point where a conductor within an element terminates. It is noted that when an impedance of a conductor between elements is sufficiently low, a terminal is construed not only as a single point but also as an arbitrary point on the conductor between the elements or the entire conductor.

[0031] In the component arrangement of the present disclosure, the phrase "component A being disposed in series on path B" can mean that both a signal input terminal and a signal output terminal of the component A are connected to a wiring line, an electrode, or a terminal that form the path B.

[0032] In addition, terms that indicate a relationship between elements, such as "parallel" or "perpendicular", and terms that indicate a shape of an element, such as "rectangular", as well as a numerical range can indicate a strict meaning, but can also include a substantially equivalent range, for example, an error such as a few percent.

[0033] First, as a technology for amplifying radio frequency signals highly efficiently, a tracking mode is described that supplies a power amplifier with a power supply voltage to be dynamically adjusted over time based on the radio frequency signal. According to an exemplary aspect, the tracking mode is a mode that dynamically adjusts a power supply voltage to be applied to the power amplifier. Although there are several types of tracking modes, here, an average power tracking (APT: Average Power Tracking) mode and an ET (ET: Envelope Tracking mode (including an analog ET mode and a digital ET mode) are described with reference to FIGS. **1**A to **1**C. In FIGS. **1**A to **1**C, a horizontal axis represents time, and a vertical axis represents a voltage. In addition, a thick solid line represents a power supply voltage, and a thin solid line (waveform) represents a modulated signal.

[0034] FIG. **1**A is a graph illustrating an example of a transition in a power supply voltage in the APT mode. In the APT mode, a power supply voltage is fluctuated to a plurality of discrete voltage levels in units of one frame based on average power. As a result, a power supply voltage signal forms a rectangular wave.

[0035] According to an exemplary aspect, a frame can be considered a unit that forms a radio frequency signal (modulated signal). For example, in 5GNR (5th Generation New Radio) and LTE (Long Term Evolution), a frame includes 10 subframes, each subframe including a plurality of slots, each slot being composed of a plurality of symbols. Moreover, a subframe has a length of 1 ms, and a frame has a length of 10 ms in the exemplary aspect.

[0036] It is noted that a mode of fluctuating a voltage level in units of one frame or larger based on the average power is referred to as the APT mode, and is distinguished from a mode that fluctuates the voltage level in units smaller than one frame (for example, a subframe, a slot, or a symbol). For example, a mode that fluctuates the voltage level in symbol units is referred to as a symbol power tracking (SPT: Symbol Power Tracking) mode and is distinguished from the APT mode.

[0037] FIG. **1**B is a graph illustrating an example of a transition in a power supply voltage in an analog ET mode. In the analog ET mode, an envelope of the modulated signal is tracked by continuously fluctuating the power supply voltage based on an envelope signal.

[0038] An envelope signal is a signal representing an envelope of a modulated signal. An envelope value is expressed by, for example, a root square of (I^2+Q^2). Here, (I, Q) represents a constellation point. A constellation point refers to a point that represents a signal modulated by digital modulation on a constellation diagram. (I, Q) is determined by, for example, BBIC (Baseband Integrated Circuit) based on, for example, transmission information.

[0039] FIG. **1**C is a graph illustrating an example of a transition in a power supply voltage in a digital ET mode. In the digital ET mode, an envelope of a modulated signal is tracked by fluctuating the power supply voltage to a plurality of discrete voltage levels in one frame based on an envelope signal. As a result, the power supply voltage signal forms a rectangular wave.

Exemplary Embodiments

1. Circuit Configuration of ET Module **1** and Communication Device **5**

[0040] An ET module **1** and a communication device **5** according to the present embodiment are described with reference to FIG. **2**.

[0041] FIG. **2** is a circuit configuration diagram of the ET module **1** and the communication device **5** according to the present embodiment. The communication device **5** according to the present embodiment corresponds to a user terminal (UE User Equipment) in a cellular network, and is typically a mobile phone, a smart phone, a tablet computer, a wearable device, or the like. It is noted that the communication device **5** may be an IoT (Internet of Things) sensor device, a medical/healthcare device, an automobile, an unmanned aerial vehicle (UAV: Unmanned Aerial Vehicle) (a so-called drone), and an automated guided vehicle (AGV: Automated Guided Vehicle).

[0042] First, a circuit configuration of the communication device **5** is described. As illustrated in FIG. **2**, the communication device **5** according to the present embodiment includes the ET module **1**, PA modules **2**A and **2**B, antennae **3**A and **3**B, and an RFIC (Radio Frequency Integrated Circuit) **4**.

[0043] The antenna **3**A is connected to the PA module **2**A and transmits a radio frequency signal output from the PA module **2**A. The antenna **3**B is connected to the PA module **2**B and transmits a radio frequency signal output from the PA module **2**B.

[0044] In an exemplary aspect, the RFIC **4** is an example of a signal processing circuit that is configured to process radio frequency signals. The RFIC **4** has a control section that controls the PA modules **2**A and **2**B. Specifically, the RFIC **4** performs signal processing on a transmission signal input from the BBIC (not illustrated) by up-conversion, or the like, and outputs a radio frequency transmission signal generated by the signal processing to the PA modules **2**A and **2**B. In addition, the RFIC **4** outputs a digital control signal that controls the ET module **1** to the ET module **1**. It is noted that some or all of capabilities of the RFIC **4** as the control section may be implemented externally to the RFIC **4**, and may be implemented, for example, in the BBIC, the PA modules **2**A and **2**B, and the ET module **1**.

[0045] The ET module **1** is configured to supply a power supply voltage V_{ETA} to the PA module **2**A and supplies a power supply voltage V_{ETB} to the PA module **2**B. The power supply voltage V_{ETA} and the power supply voltage V_{ETB} are

examples of voltages based on envelope signals. The ET module **1** can supply the power supply voltage V_{ETA} to the PA module **2**A and supply the power supply voltage V_{ETB} to the PA module **2**B in at least any of the APT mode, the analog ET mode, and the digital ET mode illustrated in FIGS. **1**A to **1**C.

[0046] As illustrated in FIG. **2**, the ET module **1** includes a voltage supply circuit **10**, a control circuit **70**, external output terminals **101** and **104**, external input terminals **102** and **105**, and control signal terminal **103**.

[0047] The voltage supply circuit **10** is configured to supply the power supply voltage V_{ETA} based on the envelope signal to the PA module **2**A by way of the external output terminal **101**, and to supply the power supply voltage V_{ETB} based on the envelope signal to the PA module **2**B by way of an external output terminal **104**. Specifically, the voltage supply circuit **10** receives a control signal output from the control circuit **70** to generate the power supply voltage V_{ETA}, and outputs the power supply voltage V_{ETA} to the external output terminal **101**. In addition, the voltage supply circuit **10** receives a control signal output from the control circuit **70** to generate the power supply voltage V_{ETB}, and outputs the power supply voltage V_{ETB} to the external output terminal **104**. The voltage supply circuit **10** is, for example, a DC-DC converter that steps up or down a pressure of magnetic energy generated by an inductor of the DC-DC converter and outputs the magnetic energy, as the power supply voltage V_{ETA} and the power supply voltage V_{ETB}. It is noted that the inductor that generates the magnetic energy may be located externally to the ET module **1**.

[0048] According to an exemplary aspect, the external output terminal **101** is an example of a first external output terminal that can be connected externally and is connected to the voltage supply circuit **10** and the PA module **2**A. The power supply voltage V_{ETA}, which is generated by the voltage supply circuit **10**, is applied to the external output terminal **101**.

[0049] In an exemplary aspect, the external output terminal **104** is an example of a second external output terminal that can be connected externally and is connected to the voltage supply circuit **10** and the PA module **2**B. The power supply voltage V_{ETB}, which is generated by the voltage supply circuit **10**, is applied to the external output terminal **104**.

[0050] In an exemplary aspect, the external input terminal **102** is an example of a first external terminal that can be connected externally and is connected to a first path connecting the external output terminal **101** and the PA module **2**A. In operation, when the analog ET mode is applied to the ET module **1**, the external input terminal **102** is configured to function as a terminal for feeding back the power supply voltage V_{ETA} on the first path to the ET module **1**, and is connected to the voltage supply circuit **10** or the control circuit **70** within the ET module **1**. In addition, when the APT mode is applied to the ET module **1**, the external input terminal **102** is configured to function as a terminal for stabilizing the power supply voltage V_{ETA} on the first path, and is connected to a capacitor, for example.

[0051] In an exemplary aspect, the external input terminal **105** is an example of the second external terminal that can be connected externally and is connected to a second path connecting the external output terminal **104** and the PA module **2**B. In operation, when the analog ET mode is applied to the ET module **1**, the external input terminal **105** is configured to function as a terminal for feeding back the power supply voltage V_{ETB} on the second path to the ET module **1**, and is connected to the voltage supply circuit **10** or the control circuit **70** within the ET module **1**. In addition, when the APT mode is applied to the ET module **1**, the external input terminal **105** is configured to function as a terminal for stabilizing the power supply voltage V_{ETB} on the second path, and is connected to a capacitor, for example.

[0052] In an exemplary aspect, the control circuit **70** is an example of a control section of the ET module **1** and is connected to the control signal terminal **103** and the voltage supply circuit **10**. The control circuit **70** is configured to control the voltage supply circuit **10** to output the power supply voltage V_{ETA} and the power supply voltage V_{ETB} from the voltage supply circuit **10**, based on an envelope signal input from the RFIC **4** via the control signal terminal **103**, target power supply voltage information of the PA modules **2**A and **2**B, and a feedback power supply voltage input via the external input terminals **102** and **105**.

[0053] The PA module **2**A is configured to receive supply of the power supply voltage V_{ETA} from the ET module **1**, amplifies a radio frequency transmission signal input from the RFIC **4**, and outputs the amplified radio frequency transmission signal to the antenna **3**A. The PA module **2**A includes power amplifiers **41**, **42**, and **43**, filters **51**, **52**, and **53**, and a switch **61**.

[0054] In an exemplary aspect, each of the power amplifiers **41** to **43** is an example of a first power amplifier and is connected between the ET module **1** and the antenna **3**A. Specifically, a supply terminal of the power amplifier **41** is connected to the ET module **1**, a radio frequency input terminal is connected to the RFIC **4**, and a radio frequency output terminal is connected to the antenna **3**A via the filter **51** and the switch **61**. A supply terminal of the power amplifier **42** is connected to the ET module **1**, a radio frequency input terminal is connected to the RFIC **4**, and a radio frequency output terminal is connected to the antenna **3**A via the filter **52** and the switch **61**. A supply terminal of the power amplifier **43** is connected to the ET module **1**, a radio frequency input terminal is connected to the RFIC **4**, and a radio frequency output terminal is connected to the antenna **3**A via the filter **53** and the switch **61**. The power amplifier **41** can amplify a radio frequency signal of band A, the power amplifier **42** can amplify a radio frequency signal of band B, and the power amplifier **43** can amplify a radio frequency signal of band C.

[0055] The filter **51** includes the band A as a pass band, for example. The filter **52** includes the band B as a pass band, for example. The filter **53** includes the band C as a pass band, for example.

[0056] The switch **61** has a common terminal and three selection terminals, and switches connection between the common terminal and any one of the three selection terminals. The common terminal of the switch **61** is connected to the antenna **3**A, a first selection terminal is connected to the filter **51**, a second selection terminal is connected to the filter **52**, and a third selection terminal is connected to the filter **53**.

[0057] According to the configuration of the PA module **2**A described above, the PA module **2**A can amplify a radio frequency signal of any one of the band A, the band B, and the band C, and output the amplified radio frequency signal to the antenna **3**A.

[0058] A node on the first path connecting each of the supply terminals of the power amplifiers **41** to **43** and the external output terminal **101** is connected to the external input terminal **102**.

[0059] The PA module **2**B receives supply of the power supply voltage V_{ETB} from the ET module **1**, amplifies a radio frequency transmission signal input from the RFIC **4**, and outputs the amplified radio frequency transmission signal to the antenna **3**B. The PA module **2**B includes power amplifiers **44**, **45** and **46**, filters **54**, **55**, and **56**, and a switch **62**.

[0060] In an exemplary aspect, each of the power amplifiers **44** to **46** is an example of a second power amplifier and is connected between the ET module **1** and the antenna **3**B. Specifically, a supply terminal of the power amplifier **44** is connected to the ET module **1**, a radio frequency input terminal is connected to the RFIC **4**, and a radio frequency output terminal is connected to the antenna **3**B via the filter **54** and the switch **62**. A supply terminal of the power amplifier **45** is connected to the ET module **1**, a radio frequency input terminal is connected to the RFIC **4**, and a radio frequency output terminal is connected to the antenna **3**B via the filter **55** and the switch **62**. A supply terminal of the power amplifier **46** is connected to the ET module **1**, a radio frequency input terminal is connected to the RFIC **4**, and a radio frequency output terminal is connected to the antenna **3**B via the filter **56** and the switch **62**. The power amplifier **44** can amplify a radio frequency signal of band D, the power amplifier **45** can amplify a radio frequency signal of band E, and the power amplifier **46** can amplify a radio frequency signal of band F.

[0061] The filter **54** includes the band D as a pass band, for example. The filter **55** includes the band E as a pass band, for example. The filter **56** includes the band F as a pass band, for example.

[0062] The switch **62** has a common terminal and three selection terminals, and switches connection between the common terminal and any one of the three selection terminals. The common terminal of the switch **62** is connected to the antenna **3**B, a first selection terminal is connected to the filter **54**, a second selection terminal is connected to the filter **55**, and a third selection terminal is connected to the filter **56**.

[0063] According to a configuration of the PA module **2**B described above, the PA module **2**B can amplify a radio frequency signal of any one of the band D, the band E, and the band F, and output the amplified radio frequency signal to the antenna **3**B.

[0064] A node on the second path connecting each of the supply terminals of the power amplifiers **44** to **46** and the external output terminal **104** is connected to the external input terminal **105**.

[0065] It is noted that each of the band A to the band F is a frequency band for a communication system that is built using a radio access technology (RAT: Radio Access Technology), and is predefined by a standardizing body (for example, 3GPP® (3rd Generation Partnership Project) and IEEE (Institute of Electrical and Electronics Engineers), or the like). Examples of communication systems include a 5GNR (5th Generation New Radio) system, an LTE (Long Term Evolution) system, and a WLAN (Wireless Local Area Network) system, or the like.

[0066] According to the above-described configuration, the communication device **5** can simultaneously transmit a radio frequency signal of any of the band A to the band C and a radio frequency signal of any of the band D to the band F. In order to cope with this, the ET module **1** is configured to supply the power supply voltage V_{ETA} (a first voltage) based on the envelope signal to the PA module **2**A via the external output terminal **101**, and simultaneously supply the power supply voltage V_{ETB} (a second voltage) based on the envelope signal to the PA module **2**B via the external output terminal **104**.

2. Circuit Configuration of ET Module **1**A and Communication Device **5**A According to Example 1

[0067] FIG. **3** is a circuit configuration diagram of an ET module **1**A and the communication device **5**A according to Example 1. The ET module **1**A and the communication device **5**A according to this Example are examples of the ET module **1** and the communication device **5** according to the present embodiment and illustrate a specific circuit configuration of the ET module **1**.

[0068] The communication device **5**A according to this Example includes the ET module **1**A, the PA modules **2**A and **2**B, capacitors **31**A and **31**B, antennae **3**A and **3**B, and the RFIC **4**. As compared to the communication device **5** according to the embodiment, the communication device **5**A according to this Example differs in that a configuration of the ET module **1**A as well as the capacitors **31**A and **31**B are added. Therefore, in the following, the communication device **5**A according to this Example is described with a focus on configurations of the ET module **1**A and the capacitors **31**A and **31**B.

[0069] In an exemplary aspect, the ET module **1**A is an example of a tracker module, and is configured to supply the power supply voltage V_{ETA}, which is one of a plurality of discrete voltages, to the PA module **2**A, and to supply the power supply voltage V_{ETB}, which is one of the plurality of discrete voltages, to the PA module **2**B. The digital ET mode and the APT mode can be used as a tracking mode, but the tracking mode is not limited thereto. As illustrated in FIG. **3**, the ET module **1**A includes a voltage supply circuit **10**A, the control circuit **70**, switches **21**A and **21**B, the external output terminals **101** and **104**, the external input terminals **102** and **105**, and the control signal terminal **103**. As compared to the ET module **1** according to the embodiment, the ET module **1**A according to this Example differs in that a configuration of the voltage supply circuit **10**A and the switches **21**A and **21**B are added. In the following, the ET module **1**A according to this Example is described, omitting the same configurations as those of the ET module **1** according to the embodiment and focusing on different configurations.

[0070] The voltage supply circuit **10**A includes a pre-regulator circuit **11**, a switched-capacitor circuit **12**, output switching circuits **13**A and **13**B, and filter circuits **14**A and **14**B.

[0071] In an exemplary aspect, the pre-regulator circuit **11** is an example of a converter circuit and includes a power inductor and a switch. A power inductor is an inductor used to step up and/or down a direct current (DC: Direct Current) voltage. The power inductor is connected in series to a direct current path. It is noted that the power inductor may be connected (e.g., disposed in parallel) between the direct current path and a ground. The pre-regulator circuit **11** can use the power inductor to convert an input voltage into a third voltage. In some cases, such a pre-regulator circuit **11** may be referred to as a magnetic regulator or a DC-DC converter.

[0072] The switched-capacitor circuit **12** includes a plurality of capacitors and a plurality of switches and can generate a plurality of discrete voltages from input voltages from the pre-regulator circuit **11**. The switched-capacitor circuit **12** may be referred to as a switched-capacitor voltage balancer (Switched-Capacitor Voltage Balancer).

[0073] In an exemplary aspect, the output switching circuit **13**A is an example of a first output switching circuit and is configured to selectively output at least one of the plurality of discrete voltages generated by the switched-capacitor circuit **12** to the PA module **2**A via the external output terminal **101**. The output switching circuit **13**A is controlled based on a digital control signal.

[0074] In an exemplary aspect, the output switching circuit **13**B is an example of a second output switching circuit and is configured to selectively output at least one of the plurality of discrete voltages generated by the switched-capacitor circuit **12** to the PA module **2**B via the external output terminal **104**. The output switching circuit **13**B is controlled based on a digital control signal.

[0075] The filter circuit **14**A can attenuate noise from the plurality of discrete voltages supplied to the PA module **2**A. The filter circuit **14**B can attenuate noise from the plurality of discrete voltages supplied to the PA module **2**B. The filter circuits **14**A and **14**B may be referred to as pulse shaping filters or transition shaping filters.

[0076] It is noted that the voltage supply circuit **10**A may not include the filter circuits **14**A and **14**B in an exemplary aspect. In addition, any combination of the pre-regulator circuit **11**, the switched-capacitor circuit **12**, the output switching circuits **13**A and **13**B, and the filter circuits **14**A and **14**B may be integrated into a single circuit. Alternatively, the voltage supply circuit **10**A may include a plurality of voltage supply circuits, instead of the pre-regulator circuit **11** and the switched-capacitor circuit **12**. In this case, the output switching circuits **13**A and **13**B may be each configured to select at least one of the plurality of voltage supply circuits.

[0077] In an exemplary aspect, the switch **21**A is an example of a first switch circuit and is connected between the external input terminal **102** and the ground to switch between connection and disconnection between the external input terminal **102** and the ground. The switch **21**B is connected between the external input terminal **105** and the ground, and switches between connection and disconnection between the external input terminal **105** and the ground.

[0078] The capacitor **31**A is disposed in series between the external input terminal **102** and a node on the first path. The capacitor **31**B is disposed in series between the external input terminal **105** and a node on the second path.

[0079] In operation, when the digital ET mode is applied to the ET module **1**A, for example, the switches **21**A and **21**B are in a non-conductive state, so that a radio frequency signal of a wide channel band width (wide modulation band width) can be amplified highly efficiently in the PA modules **2**A and **2**B. In addition, when the APT mode is applied to the ET module **1**A, for example, the switches **21**A and **21**B are in a conductive state, so that the capacitors **31**A and **31**B can be configured to function as bypass condensers, and voltage levels of the power supply voltage V_{ETA} and the power supply voltage V_{ETB} can be stabilized.

[0080] Next, circuit configuration of the pre-regulator circuit **11**, the switched-capacitor circuit **12**, the output switching circuits **13**A and **13**B, and the filter circuits **14**A and **14**B, which are included in the voltage supply circuit **10**A, are described with reference to FIG. **4**.

[0081] FIG. **4** is a diagram of circuit configurations of the pre-regulator circuit **11**, the switched-capacitor circuit **12**, the output switching circuits **13**A and **13**B, and filter circuits **14**A and **14**B according to Example 1.

[0082] It is noted that FIG. **4** is an exemplary circuit configuration, and that the pre-regulator circuit **11**, the switched-capacitor circuit **12**, the output switching circuits **13**A and **13**B, and the filter circuits **14**A and **14**B may be implemented using any of a wide variety of circuit implementations or circuit technologies. Therefore, a description of each of the circuits to be provided below should not be interpreted in a limited manner.

[2.1 Circuit Configuration of Switched-Capacitor Circuit **12**]

[0083] As illustrated in FIG. **4**, the switched-capacitor circuit **12** includes capacitors C**11** to C**16**, capacitors C**10**, C**20**, C**30**, and C**40**, and switches S**11** to S**14**, S**21** to S**24**, S**31** to S**34**, and S**41** to S**44**. Energy and electric charges are input from the pre-regulator circuit **11** to the switched-capacitor circuit **12** at nodes N**1** to N**4**, and drawn from the switched-capacitor circuit **12** to the output switching circuits **13**A and **13**B at the nodes N**1** to N**4**.

[0084] Each of the capacitors C**11** to C**16** functions as a flying capacitor (which may be referred to as a transfer capacitor). That is, each of the capacitors C**11** to C**16** are used to step up or down input voltages supplied from the pre-regulator circuit **11**. More specifically, the capacitors C**11** to C**16** transfer electric charges between the capacitors C**11** to C**16** and the nodes N**1** to N**4** so that voltages V**1** to V**4** (voltages with respect to a ground potential), which satisfy V**1**:V**2**:V**3**:V**4**=1:2:3:4 at the four nodes N**1** to N**4**, are maintained. These voltages V**1** to V**4** correspond to a plurality of discrete voltages.

[0085] The capacitor C**11** has two electrodes. One of the two electrodes of the capacitor C**11** is connected to one end of the switch S**11** and one end of the switch S**12**. The other of the two electrodes of the capacitor C**11** is connected to one end of the switch S**21** and one end of the switch S**22**.

[0086] The capacitor C**12** has two electrodes. One of the two electrodes of the capacitor C**12** is connected to the one end of the switch S**21** and the one end of the switch S**22**. The other of the two electrodes of the capacitor C**12** is connected to one end of the switch S**31** and one end of the switch S**32**.

[0087] The capacitor C**13** has two electrodes. One of the two electrodes of the capacitor C**13** is connected to the one end of the switch S**31** and one end of the switch S**32**. The other of the two electrodes of the capacitor C**13** is connected to one end of the switch S**41** and one end of the switch S**42**.

[0088] The capacitor C**14** has two electrodes. One of the two electrodes of the capacitor C**14** is connected to one end of the switch S**13** and one end of the switch S**14**. The other of the two electrodes of the capacitor C**14** is connected to one end of the switch S**23** and one end of the switch S**24**.

[0089] The capacitor C**15** has two electrodes. One of the two electrodes of the capacitor C**15** is connected to the one end of the switch S**23** and the one end of the switch S**24**. The other of the two electrodes of the capacitor C**15** is connected to one end of the switch S**33** and one end of the switch S**34**.

[0090] The capacitor C**16** has two electrodes. One of the two electrodes of the capacitor C**16** is connected to the one end of the switch S**33** and the one end of the switch S**34**. The

other of the two electrodes of the capacitor C16 is connected to one end of the switch S43 and one end of the switch S44.

[0091] Each of a set of the capacitors C11 and C14, a set of the capacitors C12 and C15, and a set of the capacitors C13 and C16 can perform charging and discharging in a complementary manner, with a first phase and a second phase being repeated.

[0092] Specifically, in the first phase, the switches S12, S13, S22, S23, S32, S33, S42, and S43 are turned ON. As a result, for example, the one of the two electrodes of the capacitor C12 is connected to the node N3, the other of the two electrodes of the capacitor C12 and the one of the two electrodes of the capacitor C15 are connected to the node N2, and the other of the two electrodes of the capacitor C15 is connected to the node N1.

[0093] In contrast, in the second phase, the switches S11, S14, S21, S24, S31, S34, S41, and S44 are turned ON. As a result, for example, the one of the two electrodes of the capacitor C15 is connected to the node N3, the other of the two electrodes of the capacitor C15 and the one of the two electrodes of the capacitor C12 are connected to the node N2, and the other of the two electrodes of the capacitor C12 is connected to the node N1.

[0094] Repetition of such first and second phases enables the other of the capacitor C12 and the other of the capacitor C15 to discharge to the capacitor C30, for example, while the one of the capacitor C12 and one of the capacitor C15 are being charged from the node N2. That is, the capacitors C12 and C15 can perform charging and discharging in a complementary manner.

[0095] Similarly to the set of the capacitors C12 and C15, the repetition of the first and second phases also enables each of the set of the capacitors C11 and C14 and the set of the capacitors C13 and C16 to perform charging and discharging in a complementary manner.

[0096] Each of the capacitors C10, C20, C30, and C40 is configured to function as a smoothing capacitor. That is, each of the capacitors C10, C20, C30, and C40 is used to hold and smoothen the voltages V1 to V4 at the nodes N1 to N4.

[0097] The capacitor C10 is connected between the node N1 and the ground. Specifically, one of two electrodes of the capacitor C10 is connected to the node N1. Meanwhile, the other of the two electrodes of the capacitor C10 is connected to the ground.

[0098] The capacitor C20 is connected between the nodes N2 and N1. Specifically, one of two electrodes of the capacitor C20 is connected to the node N2. Meanwhile, the other of the two electrodes of the capacitor C20 is connected to the node N1.

[0099] The capacitor C30 is connected between the nodes N3 and N2. Specifically, one of two electrodes of the capacitor C30 is connected to the node N3. Meanwhile, the other of the two electrodes of the capacitor C30 is connected to the node N2.

[0100] The capacitor C40 is connected between the nodes N4 and N3. Specifically, one of two electrodes of the capacitor C40 is connected to the node N4. Meanwhile, the other of the two electrodes of the capacitor C40 is connected to the node N3.

[0101] The switch S11 is connected between the one of the two electrodes of the capacitor C11 and the node N3. Specifically, the one end of the switch S11 is connected to the one of the two electrodes of the capacitor C11. Meanwhile, another end of the switch S11 is connected to the node N3.

[0102] The switch S12 is connected between the one of the two electrodes of the capacitor C11 and the node N4. Specifically, the one end of the switch S12 is connected to the one of the two electrodes of the capacitor C11. Meanwhile, another end of the switch S12 is connected to the node N4.

[0103] The switch S21 is connected between the one of the two electrodes of the capacitor C12 and the node N2. Specifically, the one end of the switch S21 is connected to the one of the two electrodes of the capacitor C12 and the other of the two electrodes of the capacitor C11. Meanwhile, another end of the switch S21 is connected to the node N2.

[0104] The switch S22 is connected between the one of the two electrodes of the capacitor C12 and the node N3. Specifically, the one end of the switch S22 is connected to the one of the two electrodes of the capacitor C12 and the other of the two electrodes of the capacitor C11. Meanwhile, another end of the switch S22 is connected to the node N3.

[0105] The switch S31 is connected between the other of the two electrodes of the capacitor C12 and the node N1. Specifically, the one end of the switch S31 is connected to the other of the two electrodes of the capacitor C12 and the one of the two electrodes of the capacitor C13. Meanwhile, another end of the switch S31 is connected to the node N1.

[0106] The switch S32 is connected between the other of the two electrodes of the capacitor C12 and the node N2. Specifically, the one end of the switch S32 is connected to the other of the two electrodes of the capacitor C12 and the one of the two electrodes of the capacitor C13. Meanwhile, another end of the switch S32 is connected to the node N2. That is, the other end of the switch S32 is connected to the other end of the switch S21.

[0107] The switch S41 is connected between the other of the two electrodes of the capacitor C13 and the ground. Specifically, the one end of the switch S41 is connected to the other of the two electrodes of the capacitor C13. Meanwhile, another end of the switch S41 is connected to the ground.

[0108] The switch S42 is connected between the other of the two electrodes of the capacitor C13 and the node N1. Specifically, the one end of the switch S42 is connected to the other of the two electrodes of the capacitor C13. Meanwhile, another end of the switch S42 is connected to the node N1. That is, the other end of the switch S42 is connected to the other end of the switch S31.

[0109] The switch S13 is connected between the one of the two electrodes of the capacitor C14 and the node N3. Specifically, the one end of the switch S13 is connected to the one of the two electrodes of the capacitor C14. Meanwhile, another end of the switch S13 is connected to the node N3. That is, the other end of the switch S13 is connected to the other end of the switch S11 and the other end of the switch S22.

[0110] The switch S14 is connected between the one of the two electrodes of the capacitor C14 and the node N4. Specifically, the one end of the switch S14 is connected to the one of the two electrodes of the capacitor C14. Meanwhile, another end of the switch S14 is connected to the node N4. That is, the other end of the switch S14 is connected to the other end of the switch S12.

[0111] The switch S**23** is connected between the one of the two electrodes of the capacitor C**15** and the node N**2**. Specifically, the one end of the switch S**23** is connected to the one of the two electrodes of the capacitor C**15** and the other of the two electrodes of the capacitor C**14**. Meanwhile, another end of the switch S**23** is connected to the node N**2**. That is, the other end of the switch S**23** is connected to the other end of the switch S**21** and the other end of the switch S**32**.

[0112] The switch S**24** is connected between the one of the two electrodes of the capacitor C**15** and the node N**3**. Specifically, the one end of the switch S**24** is connected to the one of the two electrodes of the capacitor C**15** and the other of the two electrodes of the capacitor C**14**. Meanwhile, another end of the switch S**24** is connected to the node N**3**. That is, the other end of the switch S**24** is connected to the other end of the switch S**11**, the other end of the switch S**22**, and the other end of the switch S**13**.

[0113] The switch S**33** is connected between the other of the two electrodes of the capacitor C**15** and the node N**1**. Specifically, the one end of the switch S**33** is connected to the other of the two electrodes of the capacitor C**15** and the one of the two electrodes of the capacitor C**16**. Meanwhile, another end of the switch S**33** is connected to the node N**1**. That is, the other end of the switch S**33** is connected to the other end of the switch S**31** and the other end of the switch S**42**.

[0114] The switch S**34** is connected between the other of the two electrodes of the capacitor C**15** and the node N**2**. Specifically, the one end of the switch S**34** is connected to the other of the two electrodes of the capacitor C**15** and the one of the two electrodes of the capacitor C**16**. Meanwhile, another end of the switch S**34** is connected to the node N**2**. That is, the other end of the switch S**34** is connected to the other end of the switch S**21**, the other end of the switch S**32**, and the other end of the switch S**23**.

[0115] The switch S**43** is connected between the other of the two electrodes of the capacitor C**16** and the ground. Specifically, the one end of the switch S**43** is connected to the other of the two electrodes of the capacitor C**16**. Meanwhile, another end of the switch S**43** is connected to the ground.

[0116] The switch S**44** is connected between the other of the two electrodes of the capacitor C**16** and the node N**1**. Specifically, the one end of the switch S**44** is connected to the other of the two electrodes of the capacitor C**16**. Meanwhile, another end of the switch S**44** is connected to the node N**1**. That is, the other end of the switch S**44** is connected to the other end of the switch S**31**, the other end of the switch S**42**, and the other end of the switch S**33**.

[0117] The switches S**11**, S**12**, S**13**, S**14**, S**21**, S**22**, S**23**, and S**24** are each at least one switch included in the switched-capacitor circuit **12**.

[0118] A first set of switches including the switches S**12**, S**13**, S**22**, S**23**, S**32**, S**33**, S**42**, and S**43** and a second set of switches including the switches S**11**, S**14**, S**21**, S**24**, S**31**, S**34**, S**41**, and S**44** are switched ON and OFF based on a control signal S**2** in a complementary manner. Specifically, in the first phase, the first set of switches is turned ON and the second set of switches is turned OFF. Conversely, in the second phase, the first set of switches is turned OFF and the second set of switches is turned ON.

[0119] For example, in one of the first phase and the second phase, charging of the capacitors C**10** to C**40** is performed from the capacitors C**11** to C**13**, and in the other of the first phase and the second phase, charging of the capacitors C**10** to C**40** is performed from the capacitors C**14** to C**16**. That is, the capacitors C**10** to C**40** are constantly charged from the capacitors C**11** to C**13** or the capacitors C**14** to C**16**. Therefore, even when electric currents flow from the nodes N**1** to N**4** to the output switching circuits **13**A and **13**B at a high speed, it is possible to suppress fluctuations in potentials of the nodes N**1** to N**4** because the nodes N**1** to N**4** are replenished with electric charges at a high speed.

[0120] By operating in this manner, the switched-capacitor circuit **12** can maintain an approximately equal voltage at both ends of each of the capacitors C**10**, C**20**, C**30**, and C**40**. Specifically, the voltages V**1** to V**4** (voltages relative to the ground potential) that satisfy V**1**:V**2**:V**3**:V**4**=1:2:3:4 are maintained at four nodes labelled V**1** to V**4**. Voltage levels of the voltages V**1** to V**4** correspond to a plurality of discrete voltage levels that can be supplied by the switched-capacitor circuit **12** to the output switching circuits **13**A and **13**B.

[0121] It is noted that a voltage ratio (V**1**:V**2**:V**3**:V**4**) is not limited to (1:2:3:4). For example, the voltage ratio (V**1**:V**2**:V**3**:V**4**) may be (1:2:4:8) in an alternative aspect.

[0122] In addition, a configuration of the switched-capacitor circuit **12** illustrated in FIG. **4** is merely an example and is not limited thereto. In FIG. **4**, the switched-capacitor circuit **12** is configured to be able to supply four discrete voltages, but the configuration is not limited thereto. The switched-capacitor circuit **12** may be configured to be able to supply voltages of any number of discrete voltage levels, which is 2 or more. For example, when supplying two discrete voltages, the switched-capacitor circuit **12** should include at least the capacitors C**12** and C**15** as well as the switches S**21** to S**24** and S**31** to S**34**.

[2.2 Circuit Configuration of Output Switching Circuits **13**A and **13**B]

[0123] As illustrated in FIG. **4**, the output switching circuit **13**A includes input terminals **131**A to **134**A, switches S**51**A to S**54**A, and an output terminal **130**A.

[0124] The output terminal **130**A is connected to an input terminal **140**A of the filter circuit **14**A. The output terminal **130**A is a terminal for supplying a power supply voltage selected from the voltages V**1** to V**4** to the PA module **2**A via the filter circuit **14**A.

[0125] The input terminals **131**A to **134**A are connected to the nodes N**4** to N**1** of the switched-capacitor circuit **12**, respectively. The input terminals **131**A to **134**A are terminals for receiving the voltages V**4** to V**1** from the switched-capacitor circuit **12**.

[0126] The switch S**51**A is connected between the input terminal **131**A and the output terminal **130**A. Specifically, the switch S**51**A has a terminal connected to the input terminal **131**A and a terminal connected to the output terminal **130**A. In this connection configuration, by being switched ON and OFF by a control signal S**3**A, the switch S**51**A can switch between connection and disconnection between the input terminal **131**A and the output terminal **130**A.

[0127] The switch S**52**A is connected between an input terminal **132**A and the output terminal **130**A. Specifically, the switch S**52**A has a terminal connected to the input terminal **132**A and a terminal connected to the output terminal **130**A. In this connection configuration, by being

switched ON and OFF by a control signal S3A, the switch S52A can switch between connection and disconnection between the input terminal 132A and the output terminal 130A.

[0128] The switch S53A is connected between an input terminal 133A and the output terminal 130A. Specifically, the switch S53A has a terminal connected to the input terminal 133A and a terminal connected to the output terminal 130A. In this connection configuration, by being switched ON and OFF by a control signal S3A, the switch S53A can switch between connection and disconnection between the input terminal 133A and the output terminal 130A.

[0129] The switch S54A is connected between the input terminal 134A and the output terminal 130A. Specifically, the switch S54A has a terminal connected to the input terminal 134A and a terminal connected to the output terminal 130A. In this connection configuration, by being switched ON and OFF by a control signal S3A, the switch S54A can switch between connection and disconnection between the input terminal 134A and the output terminal 130A.

[0130] The switches S51A and S52A are each at least one switch included in the output switching circuit 13A.

[0131] These switches S51A to S54A are controlled to be exclusively ON. That is, only one of the switches S51A to S54A is turned ON, and remaining switches of the switches S51A to S54A are turned OFF. This allows the output switching circuit 13A to output one voltage selected from the voltages V1 to V4.

[0132] As illustrated in FIG. 4, the output switching circuit 13B includes input terminals 131B to 134B, switches S51B to S54B, and an output terminal 130B.

[0133] The output terminal 130B is connected to an input terminal 140B of the filter circuit 14B. The output terminal 130B is a terminal for supplying a power supply voltage selected from the voltages V1 to V4 to the PA module 2B via the filter circuit 14B.

[0134] The input terminals 131B to 134B are connected to the nodes N4 to N1 of the switched-capacitor circuit 12, respectively. The input terminals 131B to 134B are terminals for receiving the voltages V4 to V1 from the switched-capacitor circuit 12.

[0135] Since configurations of the switches S51B and S54B are similar to those of the switches S51A to S54A, a description thereof is omitted here.

[0136] The switches S51B and S52B are each at least one switch included in the output switching circuit 13B.

[0137] These switches S51B to S54B are controlled to be exclusively ON. That is, only one of the switches S51B to S54B is turned ON, and remaining switches of the switches S51B to S54B are turned OFF. This allows the output switching circuit 13B to output one voltage selected from the voltages V1 to V4.

[0138] It is noted that configurations of the output switching circuits 13A and 13B illustrated in FIG. 4 are merely examples and are not limited thereto. In particular, the switches S51A to S54A may have any configuration as long as they can selectively connect at least one of the four input terminals 131A to 134A to the output terminal 130A. In addition, the switches S51B to S54B may have any configuration as long as they can selectively connect at least one of the four input terminals 131B to 134B to the output terminal 130B. For example, the output switching circuit 13A may further include a switch that is connected between the switches S51A to S53A and the switches S54A and the output terminal 130A. In addition, for example, the output switching circuit 13B may further include a switch connected between the switches S51B to S53B and the switch S54B and the output terminal 130B. In addition, for example, the output switching circuit 13A may further include a switch between the switches S51A and S52A and the switches S53A and S54 and the output terminal 130A. In addition, for example, the output switching circuit 13B may further include a switch between the switches S51B and S52B and the switches S53B and S54B and the output terminal 130B.

[0139] It is noted that when two discrete voltages are supplied from the switched-capacitor circuit 12 in an exemplary aspect, the output switching circuit 13A may include at least two of the switches S51A to S54A, and the output switching circuit 13B only includes at least two of the switches S51B to S54B.

[2.3 Circuit Configuration of Pre-regulator Circuit 11]

[0140] As illustrated in FIG. 4, the pre-regulator circuit 11 includes an input terminal 110, output terminals 111 to 114, inductor connection terminals 115 and 116, switches S61 to S63, as well as S71 and S72, a power inductor L71, and capacitors C61 to C64.

[0141] The input terminal 110 is a direct current voltage input terminal for receiving an input voltage from a direct-current power supply.

[0142] The output terminal 111 is an output terminal for the voltage V4. That is, the output terminal 111 is a terminal for supplying the voltage V4 to the switched-capacitor circuit 12. The output terminal 111 is connected to the node N4 of the switched-capacitor circuit 12.

[0143] The output terminal 112 is an output terminal for the voltage V3. That is, the output terminal 112 is a terminal for supplying the voltage V3 to the switched-capacitor circuit 12. The output terminal 112 is connected to the node N3 of the switched-capacitor circuit 12.

[0144] The output terminal 113 is an output terminal for the voltage V2. That is, the output terminal 113 is a terminal for supplying the voltage V2 to the switched-capacitor circuit 12. The output terminal 113 is connected to the node N2 of the switched-capacitor circuit 12.

[0145] The output terminal 114 is an output terminal for the voltage V1. That is, the output terminal 114 is a terminal for supplying the voltage V1 to the switched-capacitor circuit 12. The output terminal 114 is connected to the node N1 of the switched-capacitor circuit 12.

[0146] The inductor connection terminal 115 is connected to one end of the power inductor L71. The inductor connection terminal 116 is connected to another end of the power inductor L71.

[0147] The switch S71 is connected between the input terminal 110 and the one end of the power inductor L71. Specifically, the switch S71 has a terminal connected to the input terminal 110 and a terminal connected to the one end of the power inductor L71 via the inductor connection terminal 115. In this connection configuration, by switching ON/OFF based on a control signal S1, the switch S71 can switch between connection and disconnection between the input terminal 110 and the one end of the power inductor L71.

[0148] The switch S**72** is connected between the one end of the power inductor L**71** and the ground. Specifically, the switch S**72** has a terminal connected to the one end of the power inductor L**71** via the inductor connection terminal **115**, and a terminal connected to the ground. In this connection configuration, by switching ON/OFF based on the control signal S**1**, the switch S**72** can switch between connection and disconnection between the one end of the power inductor L**71** and the ground.

[0149] The switch S**61** is connected between the other end of the power inductor L**71** and the output terminal **111**. Specifically, the switch S**61** has a terminal connected to the other end of the power inductor L**71** via the inductor connection terminal **116**, and a terminal connected to the output terminal **111**. In this connection configuration, by switching ON/OFF based on the control signal S**1**, the switch S**61** can switch between connection and disconnection between the other end of the power inductor L**71** and the output terminal **111**.

[0150] A switch S**62** is connected between the other end of the power inductor L**71** and the output terminal **112**. Specifically, the switch S**62** has a terminal connected to the other end of the power inductor L**71** via the inductor connection terminal **116**, and a terminal connected to the output terminal **112**. In this connection configuration, by switching ON/OFF based on the control signal S**1**, the switch S**62** can switch between connection and disconnection between the other end of the power inductor L**71** and the output terminal **112**.

[0151] The switch S**63** is connected between the other end of the power inductor L**71** and the output terminal **113**. Specifically, the switch S**63** has a terminal connected to the other end of the power inductor L**71** via the inductor connection terminal **116**, and a terminal connected to the output terminal **113**. In this connection configuration, by switching ON/OFF based on the control signal S**1**, the switch S**63** can switch between connection and disconnection between the other end of the power inductor L**71** and the output terminal **113**.

[0152] The switches S**71** and S**72** are each at least one switch included in the pre-regulator circuit **11**.

[0153] One of two electrodes of the capacitor C**61** is connected to the switch S**61** and the output terminal **111**. The other of the two electrodes of the capacitor C**61** is connected to the switch S**62**, the output terminal **112**, and one of two electrodes of the capacitor C**62**. The capacitor C**61** is configured to function as a smoothing capacitor.

[0154] The one of the two electrodes of the capacitor C**62** is connected to the switch S**62**, the output terminal **112**, and the other of the two electrodes of the capacitor C**61**. The other of the two electrodes of the capacitor C**62** is connected to the switch S**63**, the output terminal **113**, and one of the two electrodes of the capacitor C**63**.

[0155] The one of the two electrodes of the capacitor C**63** is connected to the switch S**63**, the output terminal **113**, and the other of the two electrodes of the capacitor C**62**. The other of the two electrodes of the capacitor C**63** is connected to the output terminal **114** and one of the two electrodes of the capacitor C**64**.

[0156] The one of the two electrodes of the capacitor C**64** is connected to the output terminal **114** and the other of the two electrodes of the capacitor C**63**. The other of the two electrodes of the capacitor C**64** is connected to the ground.

[0157] The switches S**61** to S**63** are controlled to be exclusively ON. That is, only one of the switches S**61** to S**63** is turned ON, and remaining switches of the switches S**61** to S**63** are turned OFF. By turning ON only one of the switches S**61** to S**63**, the pre-regulator circuit **11** can change a voltage to be supplied to the switched-capacitor circuit **12** at the voltage levels of the voltages V**2** to V**4**.

[0158] The pre-regulator circuit **11** configured in this manner can supply electric charges to the switched-capacitor circuit **12** via at least one of the output terminals **111** to **113**.

[0159] It is noted that when an input voltage to the pre-regulator circuit **11** is converted to one voltage in an exemplary aspect, the pre-regulator circuit **11** only should include at least the switches S**71** and S**72**, and the power inductor L**71**.

[2.4 Circuit Configuration of Filter Circuits **14**A and **14**B]

[0160] As illustrated in FIG. **4**, the filter circuit **14**A includes inductors L**1** and L**2**, a capacitor C**1**, a switch SW**1**, the input terminal **140**A, and the external output terminal **101**.

[0161] The input terminal **140**A is connected to the output terminal **130**A of the output switching circuit **13**A. The input terminal **140**A is a terminal for receiving a voltage selected from a plurality of discrete voltages by the output switching circuit **13**A.

[0162] In an exemplary aspect, the external output terminal **101** is an external connection terminal of the ET module **1**A and is connected to the PA module **2**A. The external output terminal **101** is a terminal for supplying the PA module **2**A with the power supply voltage V_{ETA} which is a plurality of discrete voltages that have passed through the filter circuit **14**A.

[0163] The inductor L**1** is connected between the input terminal **140**A and the external output terminal **101**. That is, the inductor L**1** is disposed in series in a path connecting the input terminal **140**A and the external output terminal **101**. Specifically, one end of the inductor L**1** is connected to the input terminal **140**A, and another end of the inductor L**1** is connected to the external output terminal **101**.

[0164] The inductor L**2** is connected between a path connecting between the inductor L**1** and the external output terminal **101**, and the ground. That is, the inductor L**2** is shunt-connected to the path connecting the input terminal **140**A and the external output terminal **101**. Specifically, one end of the inductor L**2** is connected to a node N**42** on the path connecting the inductor L**1** and the external output terminal **101**, and another end of the inductor L**2** is connected to the ground via the capacitor C**1**. It is noted that the inductor L**2** may be connected between the capacitor C**1** and the ground, and is not necessarily included in the filter circuit **14**A in the exemplary aspect.

[0165] The capacitor C**1** is connected between the inductor L**2** and the ground. That is, the capacitor C**1** is shunt-connected to the path connecting the input terminal **140**A and the external output terminal **101**. Specifically, one end of the capacitor C**1** is connected to the inductor L**2** and another end of the capacitor C**1** is connected to the ground.

[0166] The switch SW**1** is connected between the input terminal **140**A and the external output terminal **101** not via the inductor L**1**. That is, the switch SW**1** is disposed in series in a path that bypasses the inductor L**1** between the input terminal **140**A and the external output terminal **101**. Specifically, one end of the switch SW**1** is connected to a node

N41 on a path connecting the input terminal 140A and the inductor L1, and another end of the switch SW1 is connected to a node N43 on the path connecting the inductor L1 and the external output terminal 101.

[0167] It is noted that in FIG. 4, the switch SW1 and the inductor L1 are connected in parallel, but another circuit element may be inserted in a path of the switch SW1 and/or a path of the inductor L1 in an exemplary aspect. For example, an inductor may be connected between the switch SW1 and the node N43 and/or between the switch SW1 and the node N41.

[0168] In addition, in FIG. 4, although the node N43 to which the other end of the switch SW1 is connected is located between the node N42 to which the inductor L2 is connected and the external output terminal 101, a positional relationship between the node N42 and the node N43 is not limited thereto. For example, the node N42 may be located between the node N43 and the external output terminal 101. In addition, for example, a position of the node N42 may be the same as that of the node N43.

[0169] The switch SW1 connected in this manner is switched ON/OFF based on a control signal S4A. This allows the filter circuit 14A to switch ON/OFF a band-stop filter for removing noise from a plurality of discrete voltages.

[0170] ON/OFF of such a band-stop filter can be controlled based on, for example, a channel band width (i.e., modulation band width) of a radio frequency signal. In addition, when the PA module 2A is configured to amplify transmission signals of a plurality of frequency bands, the ON/OFF of the switch SW1 may be controlled based on the frequency bands of the transmission signals amplified by the PA module 2A. It is noted that control of the band-stop filter is not limited to the above.

[0171] As illustrated in FIG. 4, the filter circuit 14B includes inductors L3 and L4, a capacitor C2, a switch SW2, the input terminal 140B, and the external output terminal 104. A configuration of the filter circuit 14B is described by replacing the inductors L1 and L2 in the filter circuit 14A with the inductors L3 and L4, replacing the capacitor C1 in the filter circuit 14A with the capacitor C2, replacing the switch SW1 in the filter circuit 14A with the switch SW2, replacing the input terminal 140A in the filter circuit 14A with the input terminal 140B, replacing the external output terminal 101 in the filter circuit 14A with the external output terminal 104, and replacing the control signal S4A with a control signal S4B.

3. Circuit Configuration of ET Module 1B and Communication Device 5B in Example 2

[0172] FIG. 5 is a circuit configuration diagram of an ET module 1B and a communication device 5B according to Example 2. The ET module 1B and the communication device 5B according to this Example are examples of the ET module 1 and the communication device 5 according to the present embodiment and illustrate a specific example of the circuit configuration of the ET module 1.

[0173] The communication device 5B according to this Example includes the ET module 1B, the PA module 2B, the antennae 3A and 3B, and the RFIC 4. The communication device 5B according to this Example differs from the communication device 5 according to the embodiment in the configuration of the ET module 1B. Therefore, in the following, the communication device 5B according to this Example is mainly described with a focus on the configuration of the ET module 1B.

[0174] In an exemplary aspect, the ET module 1B is an example of a tracker module, and is configured to supply the power supply voltages V_{ETA} and V_{ETB}, the voltage levels of which vary, to the PA modules 2A and 2B, respectively, based on a tracking mode. The analog ET mode and the APT mode can be used as a tracking mode, but the tracking mode is not limited thereto. As illustrated in FIG. 5, the ET module 1B includes a voltage supply circuit 10B, the control circuit 70, the external output terminals 101 and 104, the external input terminals 102 and 105, and the control signal terminal 103. The ET module 1B according to this Example differs from the ET module 1 according to the embodiment in a configuration of the voltage supply circuit 10B. In the following, the ET module 1B according to this Example is described, omitting the same configurations as those of the ET module 1 according to the embodiment and focusing on different configurations.

[0175] The voltage supply circuit 10B includes DC-DC converters 15A and 15B and linear amplifier circuits 16A and 16B.

[0176] Each of the DC-DC converters 15A and 15B has, for example, one power inductor and outputs a direct-current voltage. It is noted that based on a control signal received from the control circuit 70, the DC-DC converters 15A and 15B can change a level of the direct current voltage for each symbol or for average electric power corresponding to the DC-DC converters 15A and 15B.

[0177] Each of the linear amplifier circuits 16A and 16B receives, from the RFIC 4, an envelope signal representative of a power supply voltage waveform based on an envelope value, and linearly amplifies the envelope signal.

[0178] In operation, when the analog ET mode is applied to the ET module 1B, for example, the linear amplifier circuits 16A and 16B are operated, and the power supply voltages V_{ETA} and V_{ETB}, which correspond to an envelope value and the voltage levels of which vary, are generated at the voltage supply circuit 10B. The voltage supply voltages V_{ETA} is supplied to the PA module 2A via the external output terminal 101, and the voltage supply voltages V_{ETB} is supplied to the PA module 2B via the external output terminal 104. In addition, when the APT mode is applied to the ET module 1B, for example, the linear amplifier circuits 16A and 16B are not operated, and the power supply voltages V_{ETA} and V_{ETB}, which are stabilized, are generated at the voltage supply circuit 10B. The voltage supply voltages V_{ETA} is supplied to the PA module 2A via the external output terminal 101, and the voltage supply voltages V_{ETB} is supplied to the PA module 2B via the external output terminal 104.

4. Implementation Examples of ET Module 1A According to Example 1

[0179] Next, as an implementation example of the ET module 1 configured as described above, an implementation configuration of the ET module 1A according to Example 1 is described with reference to FIGS. 6A to 6C.

[0180] It is noted that in this Example, the power inductor L71 included in the pre-regulator circuit 11 is not disposed on a module laminate 90, but is not limited thereto. That is, the power inductor L71 may be disposed on the module laminate 90.

[0181] FIG. **6**A is a plan view of the ET module **1**A according to Example 1. FIG. **6**B is a plan view of the ET module **1**A according to Example 1. FIG. **6**A is a view of a main surface **90***a* side of the module laminate **90** viewed from the z-axis positive side. FIG. **6**B is a perspective view of a main surface **90***b* side of the module laminate **90** from the z-axis positive side. FIG. **6**C a cross-sectional view of the ET module **1**A according to Example 1. A cross section of the ET module **1**A in FIG. **6**C is a cross section taken along VIC-VIC line in FIGS. **6**A and **6**B.

[0182] It is noted that in FIGS. **6**A to **6**C, illustration of some of wiring lines connecting a plurality of circuit components disposed on the module laminate **90** is omitted. In FIGS. **6**A and **6**B, illustration of a resin member **91** covering the plurality of circuit components is omitted. Furthermore, in FIG. **6**C, illustration of a shield electrode layer covering the resin member **91** is omitted. Note that the resin member **91** and the shield electrode layer may be omitted. In addition, hatched blocks in FIG. **6**A represent optional circuit components that may be omitted in an exemplary aspect.

[0183] As illustrated in FIGS. **6**A and **6**B, the ET module **1**A includes the module laminate **90**, an integrated circuit **80**, the external output terminals **101** and **104**, and the external input terminals **102** and **105**.

[0184] The module laminate **90** may be, but is not limited to, for example, a low temperature co-fired ceramics (LTCC: Low Temperature Co-fired Ceramics) board or a high temperature co-fired ceramics (HTCC: High Temperature Co-fired Ceramics) board, which have a laminated structure of a plurality of dielectric layers, a component-embedded board, a board having a redistribution layer (RDL: Redistribution Layer), or a printed circuit board, or the like.

[0185] The module laminate **90** is rectangular-shaped in plan view, and has the main surface **90***a* and the main surface **90***b* that face each other. A ground plane or the like is formed in the module laminate **90** and on the main surface **90***a*.

[0186] As illustrated in FIG. **6**B, the module laminate **90** has sides P**1** (e.g., a first side), P**2**, P**3** (e.g., a second side), and P**4** that form at least a part of an outer shape of the module laminate **90** in plan view of the module laminate **90**. The side P**1** is adjacent to the sides P**2** and P**4**. The side P**2** is adjacent to the sides P**1** and P**3**. The side P**3** is adjacent to the sides P**2** and P**4**. The side P**4** is adjacent to the sides P**1** and P**3**. The side P**1** and the side P**3** are approximately parallel, and the side P**1** faces the side P**3**. The side P**2** and the side P**4** are approximately parallel, and the side P**2** faces the side P**4**.

[0187] The integrated circuit **80** is disposed on the main surface **90***a* of the module laminate **90**, and has a PR switch portion **11**S, an SC switch portion **12**S, an OS switch portion **13**S, an FL switch portion **14**S, and a digital control section **70**A. The PR switch portion **11**S includes the switches S**61** to S**63**, S**71**, and S**72** of the pre-regulator circuit **11**. The SC switch portion **12**S includes the switches S**11** to S**14**, S**21** to S**24**, S**31** to S**34**, and S**41** to S**44** of the switched-capacitor circuit **12**. The OS switch portion **13**S includes the switches S**51**A to S**54**A of the output switching circuit **13**A and the switches S**51**B to S**54**B of the output switching circuit **13**B. The FL switch portion **14**S includes the switch SW**1** of the filter circuit **14**A and the switch SW**2** of the filter circuit **14**B. The digital control section **70**A includes the control circuit **70**.

[0188] In addition, in FIG. **6**A, the integrated circuit **80** has a rectangular shape in plan view of the module laminate **90**, but the shape of the integrated circuit **80** is not limited thereto.

[0189] The integrated circuit **80** includes, for example, a CMOS (Complementary Metal Oxide Semiconductor), and, specifically, may be manufactured by an SOI (Silicon on Insulator) process. It is noted that the integrated circuit **80** is not limited to a CMOS in alternative aspects.

[0190] It is noted that the integrated circuit **80** is not necessarily configured by, for example, a single chip, and may be configured by a plurality of chips. In addition, the integrated circuit **80** should include at least the SC switch portion **12**S and the OS switch portion **13**S, and the PR switch portion **11**S, the FL switch portion **14**S, and the digital control section **70**A may be disposed outside of the integrated circuit **80**.

[0191] Furthermore, as illustrated in FIG. **6**B, a plurality of external connection terminals **150** is disposed on the main surface **90**B. The plurality of external connection terminals **150** is electrically connected to a plurality of electronic components disposed on the main surface **90***a* via a via conductor or the like formed in the module laminate **90**. The plurality of external connection terminals **150** may be a copper electrode but is not limited thereto. For example, a solder electrode may be used as the plurality of external connection terminals **150**.

[0192] Each of the external output terminals **101** and **104**, and the external input terminals **102** and **105** is one of the plurality of external connection terminals **150**. Some of the plurality of external connection terminals **150** other than the external output terminals **101** and **104**, and the external input terminals **102** and **105** are set to the ground.

[0193] Here, as illustrated in FIG. **6**B, the external output terminal **101** is disposed adjacent to the side P**1**, and the external output terminal **104** is disposed adjacent to the side P**3**. According to an exemplary aspect, in the plan view of the module laminate **90**, the external output terminal **101** and the external output terminal **104** are asymmetrically disposed with respect to a line that passes through a midpoint M of the module laminate **90** and is parallel to the sides P**1** and P**3**.

[0194] As a result of this, since the external output terminal **101** and the external output terminal **104** are asymmetrically disposed with respect to the above-mentioned line, the external output terminal **101** and the external output terminal **104** are not only separated by a length of the side P**2** located between the side P**1** and the side P**3**, but also are separated by a length that is more than the length of the side P**2**. Therefore, as compared to a configuration in which the external output terminals **101** and **104** are adjacently disposed on a same side of the module laminate **90**, and a configuration in which the external output terminals **101** and **104** are adjacently disposed on respective adjacent sides of the module laminate **90**, two wiring lines supplying the power supply voltages V_{ETA} and V_{ETB} can be disposed at a distance from each other by more than the length of the side P**2** of the module laminate **90**. As a result, heat dissipation of the ET module **1**A can be improved, and waveform distortion of the power supply voltages V_{ETA} and V_{ETB} caused by heat generation can be suppressed, thereby suppressing efficiency deterioration.

[0195] It is noted that the midpoint M of the module laminate **90** is defined as an intersecting point of two

diagonal lines of the module laminate **90** in plan view according to an exemplary aspect.

[0196] In addition, the external input terminal **102** is connected to the first path connecting the external output terminal **101** and the PA module **2**A, and the external input terminal **102** is disposed adjacent to the side P**1**. Here, as illustrated in FIG. **6**B, a distance D**1** connecting the external output terminal **101** and the external output terminal **104** is longer than a distance D**2** connecting the external output terminal **104** and the external input terminal **102**.

[0197] As a result of this, since the distance D**1** is longer than the distance D**2**, the external output terminal **101** and the external output terminal **104** are not only separated by the length of the side P**2** located between the side P**1** and the side P**3**, but also are separated by the length that is more than the length of the side P**2**. Therefore, as compared to the configuration in which the external output terminals **101** and **104** are adjacently disposed on the same side of the module laminate **90**, and the configuration in which the external output terminals **101** and **104** are adjacently disposed on the respective adjacent sides of the module laminate **90**, the two wiring lines supplying the power supply voltages V_{ETA} and V_{ETB} can be disposed at a distance from each other by more than the length of the side P**2** of the module laminate **90**. As a result, the heat dissipation of the ET module **1**A can be improved, and the waveform distortion of the power supply voltages V_{ETA} and V_{ETB} caused by the heat generation can be suppressed, thereby suppressing the efficiency deterioration.

[0198] In addition, as illustrated in FIG. **6**B, in the plan view of the module laminate **90**, the external output terminals **101** and **104** are disposed separately in two diagonally located regions (R**1** and R**3**) of four regions (R**1**, R**2**, R**3**, and R**4** in FIG. **6**B) of the module laminate **90**, the four regions being defined by the line passing through the midpoint M of the module laminate **90** and parallel to the sides P**1** and P**3** and a line passing through the midpoint M and parallel to the sides P**2** and P**4**.

[0199] As a result of this, the external output terminal **101** and the external output terminal **104** are disposed in the respective two diagonally located regions of the above four regions. Thus, as compared to a configuration in which the external output terminals **101** and **104** are disposed in respective two adjacent regions of the above four regions, the two wiring lines supplying the power supply voltages V_{ETA} and V_{ETB} can be disposed at a distance from each other by more than a length of one side of the module laminate **90**. As a result, the heat dissipation of the ET module **1**A can be improved, and the waveform distortion of the power supply voltages V_{ETA} and V_{ETB} caused by the heat generation can be suppressed, thereby suppressing the efficiency deterioration.

[0200] In addition, the external input terminal **105** is connected to the second path connecting the external output terminal **104** and the PA module **2**B, and the external input terminal **105** is disposed adjacent to the side P**3**. Here, as illustrated in FIG. **6**B, the distance D**1** connecting the external output terminal **104** and the external output terminal **101** is longer than a distance D**3** connecting the external output terminal **101** and the external input terminal **105**.

[0201] As a result of this, since the distance D**1** is longer than the distance D**3**, the external output terminal **101** and the external output terminal **104** are not only separated by the length of the side P**2** located between the side P**1** and the side P**3**, but also are separated by the length that is more than the length of the side P**2**. Therefore, as compared to the configuration in which the external output terminals **101** and **104** are adjacently disposed on the same side of the module laminate **90**, and the configuration in which the external output terminals **101** and **104** are adjacently disposed on the respective adjacent sides of the module laminate **90**, the two wiring lines supplying the power supply voltages V_{ETA} and V_{ETB} can be disposed at a distance from each other by more than the length of the side P**2** of the module laminate **90**. As a result, the heat dissipation of the ET module **1**A can be improved, and the waveform distortion of the power supply voltages V_{ETA} and V_{ETB} caused by the heat generation can be suppressed, thereby suppressing the efficiency deterioration.

[0202] In addition, in the plan view of the module laminate **90**, the external output terminal **101** and the external input terminal **102** are adjacently disposed. This configuration reduces a total wiring length of a wiring line connecting the external output terminal **101** and the PA module **2**A and a wiring line connecting the external input terminal **102** and the PA module **2**A.

[0203] In addition, in the plan view of the module laminate **90**, the external output terminal **104** and the external input terminal **105** are adjacently disposed. This configuration reduces a total wiring length of a wiring line connecting the external output terminal **104** and the PA module **2**B and the wiring line connecting the external input terminal **105** and the PA module **2**B.

[0204] In addition, as illustrated in FIG. **6**B, in the plan view of the module laminate **90**, the external connection terminal **150** (GND) set to the ground potential is disposed adjacent to the external output terminal **101**, and the external connection terminal **150** (GND) set to the ground potential is disposed adjacent to the external output terminal **104**.

[0205] As a result of this, interference between the power supply voltage V_{ETA} supplied via the external output terminal **101** and the power supply voltage V_{ETB} supplied via the external output terminal **104** can be suppressed, thereby suppressing the waveform distortion of the power supply voltage V_{ETA} and the power supply voltage V_{ETB}.

[0206] It is noted that in the plan view of the module laminate **90**, the external connection terminal **150** (GND) set to the ground potential may be disposed between the external output terminal **101** and the external output terminal **104**.

[0207] As a result of this, the interference between the power supply voltage V_{ETA} supplied via the external output terminal **101** and the power supply voltage V_{ETB} supplied via the external output terminal **104** can be suppressed, thereby suppressing the waveform distortion of the power supply voltage V_{ETA} and the power supply voltage V_{ETB}.

[0208] Furthermore, in addition to the ET module **1**A includes the module laminate **90**, the integrated circuit **80**, and a plurality of the external connection terminals **150**, the ET module **1**A includes the capacitors C**61** to C**64** included in the pre-regulator circuit **11**, the capacitors C**11** to C**16** and the capacitors C**10** to C**40** included in the switched-capacitor circuit **12**, the inductors L**1** and L**2** as well as the capacitor C**1** included in the filter circuit **14**A, the inductors L**3** and L**4** as well as the capacitor C**2** included in the filter circuit **14**B, and the resin member **91**.

[0209] The integrated circuit **80**, the capacitors C**61** to C**64**, the capacitors C**11** to C**16**, the capacitors C**10** to C**40**, the inductors L**1** to L**4** as well as the capacitors C**1** and C**2**, and the resin member **91** are disposed on the main surface **90***a*.

[0210] The resin member **91** covers at least some of the plurality of electronic components on the main surface **90***a*. The resin member **91** can be configured to ensure reliability such as mechanical strength and moisture resistance or the like of the plurality of electronic components on the main surface **90***a*. It is noted that the resin member **91** may be omitted from the ET module **1**A in an exemplary aspect.

[0211] Each of the capacitors C**61** to C**64**, the capacitors C**11** to C**16**, and the capacitors C**10** to C**40** is implemented as a chip capacitor. In an exemplary aspect, a chip capacitor can be a surface mount device (SMD: Surface Mount Device) that forms a capacitor. It is noted that the implementation of a plurality of the capacitors is not limited to a chip capacitor. For example, some or all of the plurality of capacitors may be included in an integrated passive device (IPD: Integrated Passive Device) or may be included in the integrated circuit **80** in alternative aspects.

[0212] The inductors L**1** to L**4** are implemented as chip inductors. In an exemplary aspect, a chip inductor can be an SMD that forms an inductor. It is noted that the implementation of the inductors L**1** to L**4** is not limited to a chip inductor. For example, some or all of the inductors L**1** to L**4** may be included in an IPD in alternative aspects.

[0213] The plurality of capacitors and inductors disposed in this manner on the main surface **90***a* is grouped for each circuit and is disposed around the integrated circuit **80**.

[0214] Specifically, a group of the capacitors C**61** to C**64** included in the pre-regulator circuit **11** is disposed in a region on the main surface **90***a* sandwiched between a straight line along a left edge of the integrated circuit **80** and a straight line along a left edge of the module laminate **90** in plan view of the module laminate **90**. As a result, a group of circuit components included in the pre-regulator circuit **11** is disposed close to the PR switch portion **11**S in the integrated circuit **80**.

[0215] In plan view of the module laminate **90**, a group of the capacitors C**11** to C**16** and the capacitors C**10** to C**40** included in the switched-capacitor circuit **12** is disposed in a region on the main surface **90***a* sandwiched between a straight line along an upper edge of the integrated circuit **80** and a straight line along an upper edge of the module laminate **90**, as well as in a region on the main surface **90***a* sandwiched between a straight line along a right edge of the integrated circuit **80** and a straight line along a right edge of the module laminate **90**. As a result, a group of circuit components included in the switched-capacitor circuit **12** is disposed close to the SC switch portion **12**S of the integrated circuit **80**. That is, the SC switch portion **12**S is disposed closer to the capacitors C**11** to C**16** and the capacitors C**10** to C**40** of the switched-capacitor circuit **12** than each of the PR switch portion **11**S and the OS switch portion **13**S is.

[0216] In plan view of the module laminate **90**, a group of the inductors L**1** to L**4** and the capacitors C**1** and C**2** included in the filter circuits **14**A and **14**B is disposed in a region on the main surface **90***a* sandwiched between a straight line along a lower edge of the integrated circuit **80** and a straight line along a lower edge of the module laminate **90**. As a result, a group of circuit components included in the filter circuits **14**A and **14**B is disposed close to the FL switch portion **14**S in the integrated circuit **80**. That is, the FL switch portion **14**S is disposed closer to the inductors L**1** to L**4** and the capacitors C**1** and C**2** of the filter circuits **14**A and **14**B than each of the PR switch portion **11**S and the SC switch portion **12**S is.

[0217] It is noted that configurations of the ET module **1**A illustrated in FIGS. **6**A to **6**C are merely examples, and are not limited thereto. For example, some of the capacitors and the inductors disposed on the main surface **90***a* may be formed within the module laminate **90**. In addition, some of the capacitors and the inductors disposed on the main surface **90***a* may be omitted from the ET module **1**A and are not disposed on the module laminate **90** in an exemplary aspect.

5. Arrangement of ET Module 1A and Communication Device 5A According to Example 1

[0218] Next, a description is given of the arrangement on a motherboard **92** of the communication device **5**A according to Example 1 with reference to FIG. **7**. FIG. **7** is a plan view of the communication device **5**A according to Example 1. As illustrated in FIG. **7**, the communication device **5**A includes the motherboard **92**, the RFIC **4**, the ET module **1**A, the PA modules **2**A and **2**B, and the capacitors **31**A and **31**B. The PA module **2**A includes the power amplifiers **41** to **43**, and the PA module **2**B includes the power amplifiers **44** to **46**.

[0219] The motherboard **92** can be, but is not limited to, for example, a printed circuit board, an LTCC board or an HTCC board, which have a laminated structure of a plurality of dielectric layers, a component-embedded board, a board having an RDL, or the like.

[0220] The RFIC **4**, the ET module **1**A, the PA modules **2**A and **2**B, and the capacitors **31**A and **31**B are disposed on a main surface of the motherboard **92**.

[0221] The capacitor **31**A is disposed on the motherboard **92** between the ET module **1**A and the PA module **2**A. The capacitor **31**A is connected between a node on the first path connecting the external output terminal **101** and the PA module **2**A, and the external input terminal **102**. The capacitor **31**A is implemented as a chip capacitor. It is noted that the capacitor **31**A is not limited to a chip capacitor, and may be included in an IPD, or may be formed of a planar electrode in the motherboard **92** in alternative aspects.

[0222] The external output terminal **101** is disposed adjacent to the side P**1**, and the external output terminal **104** is disposed adjacent to the side P**3**.

[0223] As a result of this, as compared to the configuration in which the external output terminals **101** and **104** are adjacently disposed on the same side of the module laminate **90** and the configuration in which the external output terminals **101** and **104** are adjacently disposed on the respective adjacent sides of the module laminate **90**, the wiring lines supplying the power supply voltages V_{ETA} and V_{ETB} can be disposed at a distance from each other. Therefore, the heat dissipation of the ET module **1**A can be improved, and the waveform distortion of the power supply voltages V_{ETA} and V_{ETB} caused by the heat generation can be suppressed, thereby suppressing the efficiency deterioration.

[0224] In addition, the external input terminal **102** is disposed adjacent to the side P**1**. As a result of this, the external input terminal **102** and the external output terminal **101** are disposed in proximity, so that the total wiring length of the wiring line connecting the external output terminal **101** and the PA module **2**A and the wiring line connecting the external input terminal **102** and the PA module **2**A can be reduced. Therefore, the waveform distortion of the power

supply voltage V_{ETA} output from the ET module **1**A can be suppressed, thereby suppressing the efficiency deterioration.

[0225] Furthermore, in the plan view of the module laminate **90**, the external output terminal **101** and the external input terminal **102** are adjacently disposed. This configuration further reduces the above total wiring length.

[0226] In addition, the external input terminal **105** is disposed adjacent to the side P**3**. As a result of this, the external input terminal **105** and the external output terminal **104** are disposed in proximity, so that the total wiring length of the wiring line connecting the external output terminal **104** and the PA module **2**B and the wiring line connecting the external input terminal **105** and the PA module **2**B can be reduced. Therefore, the waveform distortion of the power supply voltage V_{ETB} output from the ET module **1**A can be suppressed, thereby suppressing the efficiency deterioration.

[0227] Furthermore, in the plan view of the module laminate **90**, the external output terminal **104** and the external input terminal **105** are adjacently disposed. This configuration further reduces the above total wiring length.

[0228] In addition, the external output terminal **101** and the external input terminal **102** are connected to the capacitor **31**A. As a result of this, when the APT mode is applied to the ET module **1**A, the capacitor **31**A can be configured to function as the bypass condenser, and the voltage level of the power supply voltage V_{ETA} can be stabilized.

[0229] In addition, the external output terminal **104** and the external input terminal **105** are connected to the capacitor **31**B. As a result of this, when the APT mode is applied to the ET module **1**A, the capacitor **31**B can be configured to function as the bypass condenser, and the voltage level of the power supply voltage V_{ETB} can be stabilized.

6. Arrangement of ET Module 1B and Communication Device 5B According to Example 2

[0230] Next, a description is given of the arrangement on the motherboard **92** of the communication device **5**B according to Example 2 with reference to FIG. **8**. FIG. **8** is a plan view of the communication device **5**B according to Example 2. As illustrated in FIG. **8**, the communication device **5**B includes the motherboard **92**, the RFIC **4**, the ET module **1**B, the PA modules **2**A and **2**B, and inductors **33**A and **33**B. The PA module **2**A includes the power amplifiers **41** to **43**, and the PA module **2**B includes the power amplifiers **44** to **46**. It is noted that as compared to the circuit configuration of the communication device **5**B illustrated in FIG. **5**, the inductors **33**A and **33**B are added to the communication device **5**B illustrated in FIG. **8**. An implementation configuration of the communication device **5**B illustrated in FIG. **8** mainly differs from that of the communication device **5**A illustrated in FIG. **7** in that inductors **33**A and **33**B are disposed instead of the capacitors **31**A and **31**B. In the following, the implementation configuration of the communication device **5**B according to Example 2 is described with a focus on different points from the implementation configuration of the communication device **5**A according to Example 1, and a description of the same points is omitted.

[0231] The RFIC **4**, the ET module **1**B, the PA modules **2**A and **2**B, and the inductors **33**A and **33**B are disposed on the main surface of the motherboard **92**.

[0232] The inductor **33**A is disposed on the motherboard **92** between the ET module **1**B and the PA module **2**A. The inductor **33**A is disposed in series on the first path connecting the external output terminal **101** and the PA module **2**A.

[0233] As a result of this, when the analog ET mode is applied to the ET module **1**B, the inductor **33**A can be configured to function as a choke coil that blocks a radio frequency signal leaking from the PA module **2**A. Therefore, superimposition of radio frequency noise on the power supply voltage V_{ETA} output from the external output terminal **101** can be suppressed.

[0234] The inductor **33**B is disposed on the motherboard **92** between the ET module **1**B and the PA module **2**B. The inductor **33**B is disposed in series on the second path connecting the external output terminal **104** and the PA module **2**B.

[0235] As a result of this, when the analog ET mode is applied to the ET module **1**B, the inductor **33**B can be configured to function as a choke coil that blocks a radio frequency signal leaking from the PA module **2**B. Therefore, superimposition of radio frequency noise on the power supply voltage V_{ETB} output from the external output terminal **104** can be suppressed.

[0236] It is noted that each of the inductor **33**A and **33**B is implemented as a chip inductor. However, the inductors **33**A and **33**B are not limited to chip inductors, and may be included in an IPD or may be formed of a planar coil in the motherboard **92** in alternative aspects.

[0237] The external input terminal **102** is connected to the voltage supply circuit **10**B. This configuration returns a feedback signal of the power supply voltage V_{ETA} on the first path to the voltage supply circuit **10**B via the external input terminal **102**. In addition, the external input terminal **105** is connected to the voltage supply circuit **10**B. This configuration returns a feedback signal of the power supply voltage V_{ETB} on the second path to the voltage supply circuit **10**B via the external input terminal **105**. It is noted that the external input terminals **102** and **105** may be connected to the control circuit **70**, rather than being connected to the voltage supply circuit **10**B.

[0238] It is also noted that the inductor **33**A may be connected between the external input terminal **102** and a node on the first path. As a result of this, when the analog ET mode is applied to the ET module **1**B, the inductor **33**A can be configured to function as the choke coil that blocks a radio frequency signal leaking from the PA module **2**A. Therefore, it is possible to return the feedback signal of the power supply voltage V_{ETA} on the first path to the ET module **1**B with high precision via the external input terminal **102**.

[0239] In addition, the inductor **33**B may be connected between the external input terminal **105** and a node on the second path. As a result of this, when the analog ET mode is applied to the ET module **1**B, the inductor **33**B can be configured to function as the choke coil that blocks a radio frequency signal leaking from the PA module **2**B. Therefore, it is possible to return the feedback signal of the power supply voltage V_{ETB} on the second path to the ET module **1**B with high precision via the external input terminal **105**.

7. Technical Effects

[0240] As described above, the ET module **1** according to the embodiment includes the rectangular-shaped module laminate **90**; the external output terminals **101** and **104** disposed on the module laminate **90**; and the voltage supply circuit **10** disposed on the module laminate **90** and configured to supply the power supply voltage V_{ETA} based on an

envelope signal to the PA module **2**A via the external output terminal **101**, and to simultaneously supply the power supply voltage V_{ETA} based on an envelope signal to the PA module **2**B via the external output terminal **104**. The module laminate **90** has the side P**1** and the side P**3** facing the side P**1**. The sides P**1** and P**3** form at least a part of the outer shape of the module laminate **90** in plan view of the module laminate **90**. The external output terminal **101** is disposed adjacent to the side P**1**, and the external output terminal **104** is disposed adjacent to the side P**3**. In the plan view of the module laminate **90**, the external output terminal **101** and the external output terminal **104** are disposed asymmetrically with respect to the line passing through the midpoint M of the module laminate **90** and parallel to the sides P**1** and P**3**.

[0241] As result of this, since the external output terminal **101** and the external output terminal **104** are asymmetrically disposed with respect to the above-mentioned line, the external output terminal **101** and the external output terminal **104** are not only separated by the length of the side P**2** located between the side P**1** and the side P**3**, but also are separated by the length that is more than the length of the side P**2**. Therefore, as compared to the configuration in which the external output terminals **101** and **104** are adjacently disposed on the same side of the module laminate **90**, and the configuration in which the external output terminals **101** and **104** are adjacently disposed on the respective adjacent sides of the module laminate **90**, the two wiring lines supplying the power supply voltages V_{ETA} and V_{ETB} can be disposed at a distance from each other by more than the length of the side P**2** of the module laminate **90**. As a result, the heat dissipation of the ET module **1** can be improved, and the waveform distortion of the power supply voltages V_{ETA} and V_{ETB} caused by the heat generation can be suppressed, thereby suppressing the efficiency deterioration.

[0242] In addition, the ET module **1**A according to Example 1 includes the rectangular-shaped module laminate **90**; the external output terminals **101** and **104** disposed on the module laminate **90**; and the voltage supply circuit **10**A including at least one integrated circuit **80** disposed on the module laminate **90**. The voltage supply circuit **10**A includes at least one switch included in the switched-capacitor circuit **12**, at least one switch included in the output switching circuit **13**A, and at least one switch included in the output switching circuit **13**B. The switched-capacitor circuit **12** is configured to generate a plurality of discrete voltages based on an input voltage and to output the plurality of discrete voltages generated to the output switching circuits **13**A and **13**B. The output switching circuit **13**A is configured to selectively output at least one of the plurality of discrete voltages generated to the PA module **2**A via the external output terminal **101**, and the output switching circuit **13**B is configured to selectively output at least one of the plurality of discrete voltages generated to the PA module **2**B via the external output terminal **104**. The module laminate **90** has the side P**1** and the side P**3** facing the side P**1**. The sides P**1** and P**3** form at least a part of the outer shape of the module laminate **90** in plan view of the module laminate **90**. The external output terminal **101** is disposed adjacent to the side P**1**, and the external output terminal **104** is disposed adjacent to the side P**3**. In the plan view of the module laminate **90**, the external output terminal **101** and the external output terminal **104** are disposed asymmetrically with respect to the line passing through the midpoint M of the module laminate **90** and parallel to the side P**1** and the side P**3**.

[0243] As a result of this, as compared to the configuration in which the external output terminals **101** and **104** are adjacently disposed on the same side of the module laminate **90**, and the configuration in which the external output terminals **101** and **104** are adjacently disposed on the respective adjacent sides of the module laminate **90**, the two wiring lines supplying the power supply voltages V_{ETA} and V_{ETB} can be disposed at a distance from each other by more than the length of the side P**2** of the module laminate **90**. Therefore, the heat dissipation of the ET module **1**A can be improved, and the waveform distortion of the power supply voltages V_{ETA} and V_{ETB} caused by the heat generation can be suppressed, thereby suppressing the efficiency deterioration.

[0244] In addition, the ET module **1**A according to Example 1 includes the rectangular-shaped module laminate **90**; the external output terminals **101** and **104** and the external input terminal **102** disposed on the module laminate **90**; and the voltage supply circuit **10**A including at least one integrated circuit **80** disposed on the module laminate **90**. The voltage supply circuit **10**A includes at least one switch included in the switched-capacitor circuit **12**, at least one switch included in the output switching circuit **13**A, and at least one switch included in the output switching circuit **13**B. The switched-capacitor circuit **12** is configured to generate a plurality of discrete voltages based on an input voltage, and to output the plurality of discrete voltages generated to the output switching circuits **13**A and **13**B. The output switching circuit **13**A is configured to selectively output at least one of the plurality of discrete voltages generated to the PA module **2**A via the external output terminal **101**, and the output switching circuit **13**B is configured to selectively output at least one of the plurality of discrete voltages generated to the PA module **2**B via the external output terminal **104**. The module laminate **90** has the side P**1** and the side P**3** facing the side P**1**. The sides P**1** and P**3** form at least a part of the outer shape of the module laminate **90** in plan view of the module laminate **90**. The external output terminal **101** and the external input terminal **102** are disposed adjacent to the side P**1**, and the external output terminal **104** is disposed on the side P**3**. The distance D**1** connecting the external output terminal **101** and the external output terminal **104** is longer than the distance D**2** connecting the external output terminal **104** and the external input terminal **102**.

[0245] As a result of this, since the distance D**1** is longer than the distance D**2**, the external output terminal **101** and the external output terminal **104** are not only separated by the length of the side P**2** located between the side P**1** and the side P**3**, but also are separated by the length that is more than the length of the side P**2**. Therefore, as compared to the configuration in which the external output terminals **101** and **104** are adjacently disposed on the same side of the module laminate **90**, and the configuration in which the external output terminals **101** and **104** are adjacently disposed on the respective adjacent sides of the module laminate **90**, the two wiring lines supplying the power supply voltages V_{ETA} and V_{ETB} can be disposed at a distance from each other by more than the length of the side P**2** of the module laminate **90**. As a result, the heat dissipation of the ET module **1**A can be improved, and the waveform distortion of the power supply voltages V_{ETA} and V_{ETB} caused by the heat generation can be suppressed, thereby suppressing the efficiency deterioration.

[0246] In addition, for example, in the ET modules **1**, **1**A, and **1**B, the external input terminal **102** is connected to the first path connecting the external output terminal **101** and the PA module **2**A.

[0247] As a result of this, when the analog ET mode is applied to the ET module, the external input terminal **102** is configured to function as the terminal for feeding back the power supply voltage V_{ETA} on the first path to the ET module. In addition, when the APT mode is applied to the ET module, the external input terminal **102** is configured to function as the terminal for stabilizing the power supply voltage V_{ETA} on the first path.

[0248] In addition, for example, the ET modules **1**, **1**A, and **1**B further include the external input terminal **105** connected to the second path connecting the external output terminal **104** and the PA module **2**B.

[0249] As a result of this, when the analog ET mode is applied to the ET module, the external input terminal **105** is configured to function as the terminal for feeding back the power supply voltage V_{ETB} on the second path to the ET module. In addition, when the APT mode is applied to the ET module, the external input terminal **105** is configured to function as the terminal for stabilizing the power supply voltage V_{ETB} on the second path.

[0250] In addition, for example, in the ET modules **1**, **1**A, and **1**B, the external input terminal **105** is disposed adjacent to the side P**3**.

[0251] As a result of this, the external input terminal **105** and the external output terminal **104** are disposed in proximity, so that the total wiring length of the wiring line connecting the external output terminal **104** and the PA module **2**B and the wiring line connecting the external input terminal **105** and the PA module **2**B can be reduced. Therefore, the waveform distortion of the power supply voltage V_{ETB} output from the ET module can be suppressed, thereby suppressing the efficiency deterioration.

[0252] In addition, in the ET modules **1**, **1**A, and **1**B, the distance D**1** connecting the external output terminal **104** and the external output terminal **101** is longer than the distance D**3** connecting the external output terminal **101** and the external input terminal **105**.

[0253] As a result of this, since the distance D**1** is longer than the distance D**3**, the external output terminal **101** and the external output terminal **104** are not only separated by the length of the side P**2** located between the side P**1** and the side P**3**, but also are separated by the length that is more than the length of the side P**2**. Therefore, as compared to the configuration in which the external output terminals **101** and **104** are adjacently disposed on the same side of the module laminate **90**, and the configuration in which the external output terminals **101** and **104** are adjacently disposed on the respective adjacent sides of the module laminate **90**, the two wiring lines supplying the power supply voltages V_{ETA} and V_{ETB} can be disposed at a distance from each other by more than the length of the side P**2** of the module laminate **90**. As a result, the heat dissipation of the ET module can be improved, and the waveform distortion of the power supply voltages V_{ETA} and V_{ETB} caused by the heat generation can be suppressed, thereby suppressing the efficiency deterioration.

[0254] In addition, for example, in the ET modules **1**, **1**A, and **1**B, the external output terminal **101** and the external input terminal **102** are adjacently disposed in the plan view of the module laminate **90**.

[0255] This can reduce the total wiring length of the wiring line connecting the external output terminal **101** and the PA module **2**A and the wiring line connecting the external input terminal **102** and the PA module **2**A. Therefore, the waveform distortion of the power supply voltage V_{ETA} output from the ET module can be suppressed, thereby suppressing the efficiency deterioration.

[0256] In addition, for example, in the ET modules **1**, **1**A, and **1**B, the external output terminal **104** and the external input terminal **105** are adjacently disposed in the plan view of the module laminate **90**.

[0257] This configuration reduces the total wiring length of the wiring line connecting the external output terminal **104** and the PA module **2**B and the wiring line connecting the external input terminal **105** and the PA module **2**B. Therefore, the waveform distortion of the power supply voltage V_{ETB} output from the ET module can be suppressed, thereby suppressing the efficiency deterioration.

[0258] In addition, for example, in the ET modules **1**, **1**A, and **1**B, in the plan view of the module laminate **90**, the external output terminals **101** and **104** are disposed separately in the two diagonally located regions (R**1** and R**3**) of the four regions (R**1**, R**2**, R**3**, and R**4**) of the module laminate **90**, the four regions being defined by a line passing through the midpoint M of the module laminate **90** and parallel to the sides P**1** and P**3** and a line passing through the midpoint M and perpendicular to the sides P**1** and P**3**.

[0259] As a result of this, as compared to a configuration in which the external output terminals **101** and **104** are disposed in respective two adjacent regions of the above four regions, the two wiring lines supplying the power supply voltages V_{ETA} and V_{ETB} can be disposed at a distance from each other by more than the length of one side of the module laminate **90**. Therefore, the heat dissipation of the ET module can be improved, and the waveform distortion of the power supply voltages V_{ETA} and V_{ETB} caused by the heat generation can be suppressed, thereby suppressing the efficiency deterioration.

[0260] In addition, for example, in the ET module **1**A, the external output terminal **101** and the external input terminal **102** are connected to the capacitor **31**A.

[0261] As a result of this, when the APT mode is applied to the ET module **1**A, the capacitor **31**A can be configured to function as the bypass condenser, and the voltage level of the power supply voltage V_{ETA} can be stabilized.

[0262] In addition, for example, the ET Module **1**A further includes the switch **21**A that switches between connection and disconnection between the external input terminal **102** and the ground.

[0263] As a result of this, when the digital ET mode is applied to the ET module **1**A, the switch **21**A is in a non-conductive state, so that a radio frequency signal of the wide channel band width (wide modulation band width) can be amplified highly efficiently in the PA module **2**A. In addition, when the APT mode is applied to the ET module **1**A, the switch **21**A is in a conductive state, the capacitor **31**A can be configured to function as the bypass condenser, and the voltage level of the power supply voltage V_{ETA} can be stabilized.

[0264] In addition, for example, in the ET module **1**B, at least one of the external input terminal **102** and the external output terminal **101** is connected to the inductor **33**A.

[0265] As a result of this, when the analog ET mode is applied to the ET module **1**B, the inductor **33**A can be

configured to function as the choke coil that blocks a radio frequency signal leaking from the PA module **2**A. Therefore, it is possible to return the feedback signal of the power supply voltage V_{ETA} on the first path to the ET module **1**B with high precision via the external input terminal **102**. In addition, the superimposition of the radio frequency noise on the power supply voltage V_{ETA} output from the external output terminal **101** can be suppressed.

[0266] In addition, for example, in the ET module **1**B, the external input terminal **102** is connected to the voltage supply circuit **10**B.

[0267] This configuration returns the feedback signal of the power supply voltage V_{ETA} on the first path to the voltage supply circuit **10**B via the external input terminal **102**.

[0268] In addition, the communication device **5** according to the embodiment includes the RFIC **4** that processes radio frequency signals, the ET module **1** connected to the RFIC **4**, the PA modules **2**A and **2**B, and the motherboard **92** ono which the RFIC **4**, the ET module **1**, as well as the PA modules **2**A and **2**B are disposed.

[0269] This configuration realizes the effects of the ET module **1** in the communication device **5**.

[0270] In addition, for example, the communication device **5**A according to Example 1 further includes the capacitor **31**A that is disposed on the motherboard **92** and connected to the external output terminal **101**.

[0271] As a result of this, when the APT mode is applied to the ET module **1**A, the capacitor **31**A can be configured to function as the bypass condenser, and the voltage level of the power supply voltage V_{ETA} can be stabilized.

[0272] In addition, for example, the communication device **5**B according to Example 2 further includes the inductor **33**A that is disposed on the motherboard **92** and connected to the external output terminal **101**.

[0273] As a result of this, when the analog ET mode is applied to the ET module **1**B, the inductor **33**A can be configured to function as the choke coil that blocks a radio frequency signal leaking from the PA module **2**A. Therefore, it is possible to suppress the superimposition of the radio frequency noise on the power supply voltage V_{ETA} output from the external output terminal **101**.

Additional Exemplary Embodiment

[0274] As described above, the tracker modules and the communication devices according to the present disclosure have been described based on the embodiments, examples, and modification examples. However, the tracker modules and the communication devices according to the present disclosure are not limited to the above-described embodiments, examples, and modification examples. The exemplary aspects of the present disclosure also includes other embodiments realized by combining any of the components in the above-described embodiments, examples, and modification examples, modification examples obtained by applying various modifications to the above-described embodiments, examples, and modification examples without departing from the spirit of the exemplary aspects of the present disclosure, or various types of devices that incorporate the tracker modules or the communication devices described above.

[0275] For example, in the circuit configurations of the various circuits according to the above-described embodiment, examples, and modification examples, another circuit element and wiring line, or the like may be inserted between the paths connecting the circuit elements and the signal paths disclosed in the drawings.

[0276] In the following, a description is given of the characteristics of the tracker modules and the communication devices described based on the exemplary embodiment described above.

[0277] <1> A tracker module is provided that includes a module laminate having a rectangular shape; a first external output terminal and a second external output terminal disposed on the module laminate; and a voltage supply circuit disposed on the module laminate and configured to supply a first voltage based on an envelope signal to a first power amplifier via the first external output terminal, and to simultaneously supply a second voltage based on an envelope signal to a second power amplifier via the second external output terminal, in which the module laminate has a first side and a second side facing the first side, the first side and the second side forming at least a part of an outer shape of the module laminate in plan view of the module laminate, the first external output terminal is disposed adjacent to the first side, the second external output terminal is disposed adjacent to the second side, and in a plan view of the module laminate, the first external output terminal and the second external output terminal are disposed asymmetrically with respect to a line passing through a midpoint of the module laminate and parallel to the first side and the second side.

[0278] <2> A tracker module is provided that includes a module laminate having a rectangular shape; a first external output terminal and a second external output terminal disposed on the module laminate; and a voltage supply circuit including at least one integrated circuit disposed on the module laminate, in which the at least one integrated circuit includes at least one switch included in a switched-capacitor circuit, at least one switch included in a first output switching circuit, and at least one switch included in a second output switching circuit, the switched-capacitor circuit is configured to generate a plurality of discrete voltages based on an input voltage and to output the plurality of discrete voltages generated to the first output switching circuit and the second output switching circuit, the first output switching circuit is configured to selectively output at least one of the plurality of discrete voltages generated to a first power amplifier via the first external output terminal, the second output switching circuit is configured to selectively output at least one of the plurality of discrete voltages generated to a second power amplifier via the second external output terminal, the module laminate has a first side and a second side facing the first side, the first side and the second side forming at least a part of an outer shape of the module laminate in plan view of the module laminate, the first external output terminal is disposed adjacent to the first side, the second external output terminal is disposed adjacent to the second side, and in a plan view of the module laminate, the first external output terminal and the second external output terminal are disposed asymmetrically with respect to a line passing through a midpoint of the module laminate and parallel to the first side and the second side.

[0279] <3> A tracker module is provided that includes a module laminate having a rectangular shape; a first external output terminal, a second external output terminal, and a first external terminal disposed on the module laminate; and a voltage supply circuit including at least one integrated circuit disposed on the module laminate, in which the at least one integrated circuit includes at least one switch included in a switched-capacitor circuit, at least one switch included

in a first output switching circuit, and at least one switch included in a second output switching circuit, the switched-capacitor circuit is configured to generate a plurality of discrete voltages based on an input voltage and to output the plurality of discrete voltages generated to the first output switching circuit and the second output switching circuit, the first output switching circuit is configured to selectively output at least one of the plurality of discrete voltages generated to a first power amplifier via the first external output terminal, the second output switching circuit is configured to selectively output at least one of the plurality of discrete voltages generated to a second power amplifier via the second external output terminal, the module laminate has a first side and a second side facing the first side, the first side and the second side forming at least a part of an outer shape of the module laminate in plan view of the module laminate, the first external output terminal and the first external terminal are disposed adjacent to the first side, the second external output terminal is disposed on the second side, and a distance between the first external output terminal and the second external output terminal is longer than a distance between the second external output terminal and the first external terminal.

[0280] <4> The tracker module according to <3>, in which the first external terminal is connected to a first path connecting the first external output terminal and the first power amplifier.

[0281] <5> The tracker module according to <3> or <4>, further including a second external terminal connected to a second path connecting the second external output terminal and the second power amplifier.

[0282] <6> The tracker module according to <5>, in which the second external terminal is disposed adjacent to the second side.

[0283] <7> The tracker module according to <6>, in which a distance between the second external output terminal and the first external output terminal is longer than a distance between the first external output terminal and the second external terminal.

[0284] <8> The tracker module according to any one of <3> to <7>, wherein, in a plan view of the module laminate, the first external output terminal and the first external terminal are disposed adjacent to each other.

[0285] <9> The tracker module according to <6>, wherein, in a plan view of the module laminate, the second external output terminal and the second external terminal are disposed adjacent to each other.

[0286] <10> The tracker module according to any one of <1> to <9>, wherein, in a plan view of the module laminate, the first external output terminal and the second external output terminal are disposed separately in two diagonally located regions of four regions of the module laminate, the four regions being defined by a line passing through a midpoint of the module laminate and parallel to the first side and the second side, and a line passing through the midpoint and perpendicular to the first side and the second side.

[0287] <11> The tracker module according to <3>, in which the first external output terminal and the first external terminal are connected to a capacitor.

[0288] <12> The tracker module according to <11>, further including a first switch circuit that switches between connection and disconnection between the first external terminal and a ground.

[0289] <13> The tracker module according to <3>, in which at least one of the first external terminal and the first external output terminal is connected to an inductor.

[0290] <14> The tracker module according to <3> or <13>, in which the first external terminal is connected to the voltage supply circuit.

[0291] <15> A communication device is provided that includes a signal processing circuit that processes radio frequency signals; the tracker module according to any one of <1> to <14>, which is connected to the signal processing circuit; the first power amplifier and the second power amplifier; and a motherboard on which the signal processing circuit, the tracker module, and the first power amplifier and the second power amplifier are disposed.

[0292] <16> The communication device according to <15>, further including a capacitor disposed on the motherboard and connected to the first external output terminal.

[0293] <17> The communication device according to <15>, further including an inductor disposed on the motherboard and connected to the first external output terminal.

[0294] The exemplary aspects of the present disclosure can be widely used in communication devices, such as mobile phones, as a tracker module that supplies voltages to a power amplifier.

REFERENCE SIGNS LIST

[0295] **1**, **1**A, **1**B ET MODULE
[0296] **2**A, **2**B PA MODULE
[0297] **3**A, **3**B ANTENNA
[0298] **4** RFIC
[0299] **5**, **5**A, **5**B COMMUNICATION DEVICE
[0300] **10**, **10**A, **10**B VOLTAGE SUPPLY CIRCUIT
[0301] **11** PRE-REGULATOR CIRCUIT
[0302] **11**S PR SWITCH PORTION
[0303] **12** SWITCHED-CAPACITOR CIRCUIT
[0304] **12**S SC SWITCH PORTION
[0305] **13**A, **13**B OUTPUT SWITCHING CIRCUIT
[0306] **13**S OS SWITCH PORTION
[0307] **14**A, **14**B FILTER CIRCUIT
[0308] **14**S FL SWITCH PORTION
[0309] **15**A, **15**B DC-DC CONVERTER
[0310] **16**A, **16**B LINEAR AMPLIFIER CIRCUIT
[0311] **21**A, **21**B, **61**, **62** SWITCH
[0312] **31**A, **31**B CAPACITOR
[0313] **33**A, **33**B INDUCTOR
[0314] **41**, **42**, **43**, **44**, **45**, **46** POWER AMPLIFIER
[0315] **51**, **52**, **53**, **54**, **55**, **56** FILTER
[0316] **70** CONTROL CIRCUIT
[0317] **70**A DIGITAL CONTROL SECTION
[0318] **80** INTEGRATED CIRCUITS
[0319] **90** MODULE LAMINATE
[0320] **90***a*, **90***b* MAIN SURFACE
[0321] **91** RESIN MEMBER
[0322] **92** MOTHERBOARD
[0323] **101**, **104** EXTERNAL OUTPUT TERMINAL
[0324] **102**, **105** EXTERNAL INPUT TERMINALS
[0325] **103** CONTROL SIGNAL TERMINAL
[0326] **110**, **131**A, **131**B, **132**A, **132**B, **133**A, **133**B, **134**A, **134**B, **140**A, **140**B INPUT TERMINALS
[0327] **111**, **112**, **113**, **114**, **130**A, **130**B OUTPUT TERMINALS
[0328] **150** EXTERNAL CONNECTION TERMINAL
[0329] D**1**, D**2**, D**3** DISTANCE
[0330] M MIDPOINT
[0331] P**1**, P**2**, P**3**, P**4** SIDE
[0332] R**1**, R**2**, R**3**, R**4** REG

What is claimed:

1. A tracker module comprising:

a module laminate;

a first external output terminal and a second external output terminal disposed on the module laminate; and

a voltage supply circuit disposed on the module laminate,

wherein the module laminate has a first side and a second side facing the first side, the first side and the second side forming at least a part of an outer shape of the module laminate in a plan view of the module laminate,

wherein the first external output terminal is disposed adjacent to the first side, and the second external output terminal is disposed adjacent to the second side, and

wherein, in the plan view of the module laminate, the first external output terminal and the second external output terminal are disposed asymmetrically with respect to a line passing through a midpoint of the module laminate and parallel to the first side and the second side.

2. The tracker module according to claim **1**, wherein the module laminate has a rectangular shape in the plan view o the module laminate.

3. The tracker module according to claim **1**, wherein the voltage supply circuit is configured to supply a first voltage based on an envelope signal to a first power amplifier via the first external output terminal, and to simultaneously supply a second voltage based on the envelope signal to a second power amplifier via the second external output terminal.

4. The tracker module according to claim **1** wherein:

the voltage supply circuit includes at least one integrated circuit disposed on the module laminate,

the at least one integrated circuit includes at least one switch included in a switched-capacitor circuit, at least one switch included in a first output switching circuit, and at least one switch included in a second output switching circuit,

the switched-capacitor circuit is configured to generate a plurality of discrete voltages based on an input voltage and to output the generated plurality of discrete voltages to the first output switching circuit and the second output switching circuit,

the first output switching circuit is configured to selectively output at least one of the generated plurality of discrete voltages to a first power amplifier via the first external output terminal, and

the second output switching circuit is configured to selectively output at least one of the generated plurality of discrete voltages to a second power amplifier via the second external output terminal.

5. A tracker module comprising:

a module laminate having a rectangular shape;

a first external output terminal, a second external output terminal, and a first external terminal disposed on the module laminate; and

a voltage supply circuit including at least one integrated circuit disposed on the module laminate,

wherein the at least one integrated circuit includes at least one switch included in a switched-capacitor circuit, at least one switch included in a first output switching circuit, and at least one switch included in a second output switching circuit,

wherein the switched-capacitor circuit is configured to generate a plurality of discrete voltages based on an input voltage and to output the generated plurality of discrete voltages to the first output switching circuit and the second output switching circuit,

wherein the first output switching circuit is configured to selectively output at least one of the generated plurality of discrete voltages to a first power amplifier via the first external output terminal,

wherein the second output switching circuit is configured to selectively output at least one of the generated plurality of discrete voltages to a second power amplifier via the second external output terminal,

wherein the module laminate has a first side and a second side facing the first side, the first side and the second side forming at least a part of an outer shape of the module laminate in a plan view of the module laminate,

wherein the first external output terminal and the first external terminal are disposed adjacent to the first side, and the second external output terminal is disposed on the second side, and

wherein a distance between the first external output terminal and the second external output terminal is longer than a distance between the second external output terminal and the first external terminal.

6. The tracker module according to claim **5**, wherein the first external terminal is connected to a first path connecting the first external output terminal and the first power amplifier.

7. The tracker module according to claim **5**, further comprising a second external terminal connected to a second path connecting the second external output terminal and the second power amplifier.

8. The tracker module according to claim **7**, wherein the second external terminal is disposed adjacent to the second side.

9. The tracker module according to claim **8**, wherein a distance between the second external output terminal and the first external output terminal is longer than a distance between the first external output terminal and the second external terminal.

10. The tracker module according to claim **5**, wherein, in the plan view of the module laminate, the first external output terminal is disposed adjacent to the first external terminal.

11. The tracker module according to claim **8**, wherein, in the plan view of the module laminate, the second external output terminal is disposed adjacent to the second external terminal.

12. The tracker module according to claim **5**, wherein, in the plan view of the module laminate, the first external output terminal and the second external output terminal are disposed separately in two diagonally located regions of four regions of the module laminate, the four regions are defined by a line passing through a midpoint of the module laminate and parallel to the first side and the second side, and a line passing through the midpoint and perpendicular to the first side and the second side.

13. The tracker module according to claim **5**, wherein the first external output terminal and the first external terminal are connected to a capacitor.

14. The tracker module according to claim **13**, further comprising a first switch circuit configured to switch between a connection and a disconnection between the first external terminal and a ground.

15. The tracker module according to claim **5**, wherein at least one of the first external terminal and the first external output terminal is connected to an inductor.

16. The tracker module according to claim **5**, wherein the first external terminal is connected to the voltage supply circuit.

17. A communication device comprising:

a signal processing circuit configured to process radio frequency signals;

the tracker module according to claim **5** and that is connected to the signal processing circuit;

the first power amplifier and the second power amplifier; and

a motherboard on which the signal processing circuit, the tracker module, and the first power amplifier and the second power amplifier are disposed.

18. The communication device according to claim **17**, further comprising a capacitor disposed on the motherboard and connected to the first external output terminal.

19. The communication device according to claim **17**, further comprising an inductor disposed on the motherboard and connected to the first external output terminal.

20. A communication device comprising:

a signal processing circuit configured to process radio frequency signals;

the tracker module according to claim **1** and that is connected to the signal processing circuit;

the first power amplifier and the second power amplifier, and

a motherboard on which the signal processing circuit, the tracker module, and the first power amplifier and the second power amplifier are disposed.

* * * * *