US 20250280541A1

(19) United States
(12) Patent Application Publication
CAO
(10) Pub. No.: US 2025/0280541 A1
(43) Pub. Date: Sep. 4, 2025

(54) **MEMORY DEVICE AND MANUFACTURING METHOD THEREOF**

(71) Applicant: **WUHAN XINXIN SEMICONDUCTOR MANUFACTURING CO., LTD.**, WUHAN (CN)

(72) Inventor: **Kaiwei CAO**, WUHAN (CN)

(21) Appl. No.: **19/207,414**

(22) Filed: **May 14, 2025**

Related U.S. Application Data

(63) Continuation of application No. PCT/CN2023/124594, filed on Oct. 13, 2023.

(30) **Foreign Application Priority Data**

Dec. 20, 2022 (CN) 202211643910.2

Publication Classification

(51) **Int. Cl.**
H10B 43/30 (2023.01)
H10B 41/27 (2023.01)
H10B 41/30 (2023.01)
H10B 43/27 (2023.01)

(52) **U.S. Cl.**
CPC ***H10B 43/30*** (2023.02); ***H10B 41/27*** (2023.02); ***H10B 41/30*** (2023.02); ***H10B 43/27*** (2023.02)

(57) **ABSTRACT**

The present disclosure provides a memory device and a manufacturing method thereof. The memory device includes a substrate and at least one memory array. Each memory subarray layer in each memory array includes a drain region semiconductor layer, a channel semiconductor layer, and a source region semiconductor layer. The drain region semiconductor layer, the channel semiconductor layer, and the source region semiconductor layer respectively include multiple drain region semiconductor strips, channel semiconductor strips, and source region semiconductor strips. A column of drain region semiconductor strips, channel semiconductor strips, and source region semiconductor strips is a column of semiconductor strip structures. Each memory array includes a channel connection structure, in contact with each channel semiconductor strip in each column of semiconductor strip structures, and insulated from each drain region semiconductor strip and each source region semiconductor strip in each column of semiconductor strip structures.

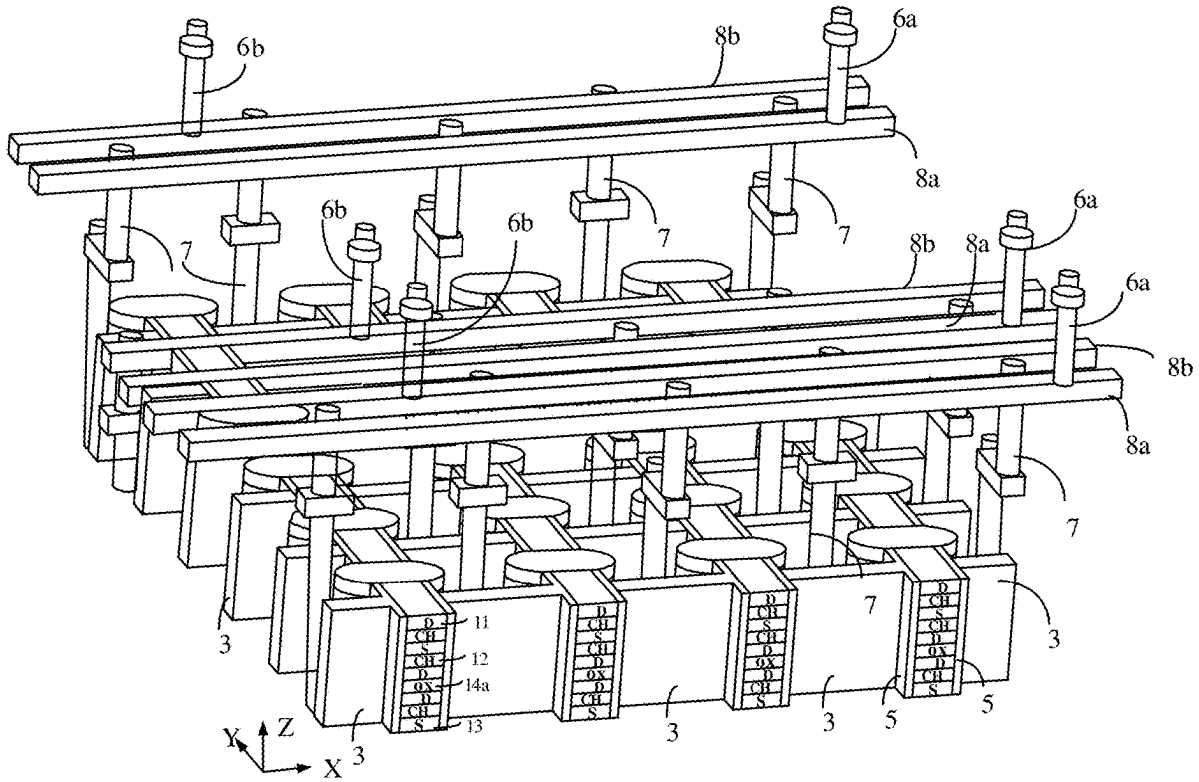

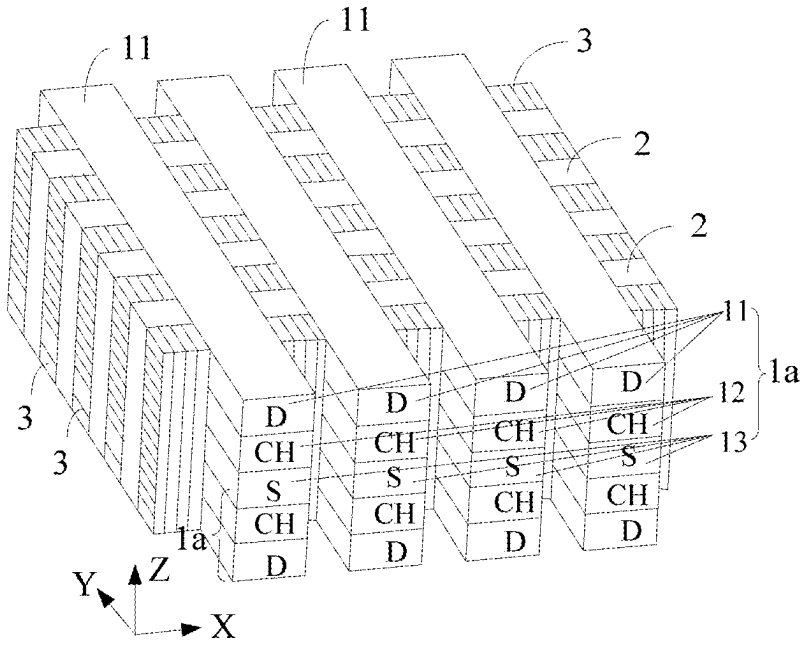
11
11
3
2
2
11
1a
12
13
3
3
D
CH
S
CH
D
1a
Y
Z
X

FIG. 1

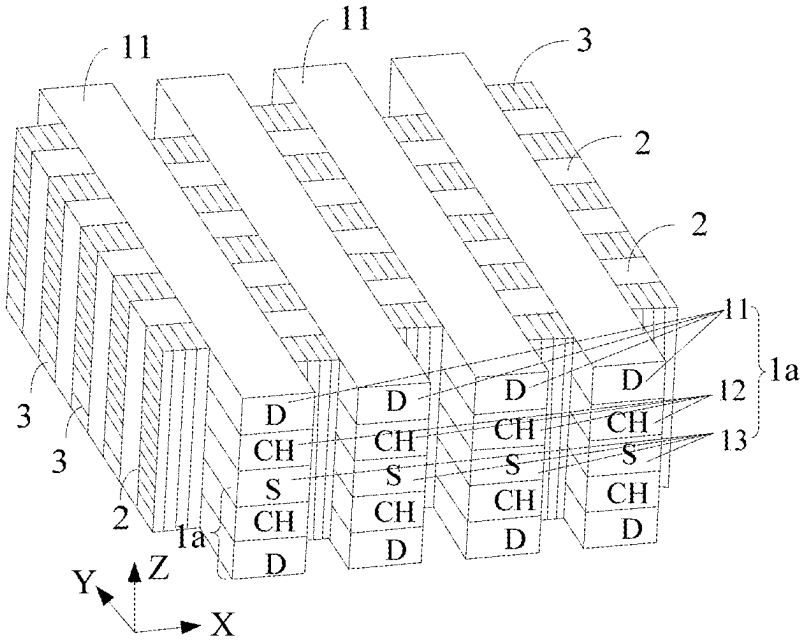
11
11
3
2
2
11
1a
12
13
3
3
2
1a
D
CH
S
CH
D
Y
Z
X

FIG. 2

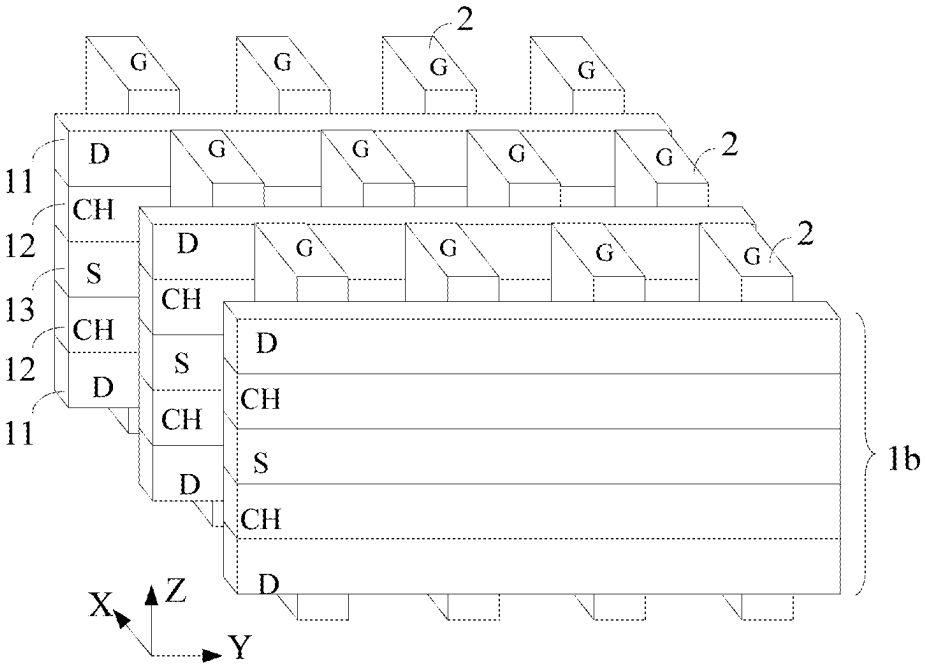
2
G
G
G
G
D
G
G
G
G
2
11
CH
12
S
13
CH
12
D
11
D
G
G
G
G
2
CH
S
CH
D
D
CH
S
CH
D
1b
X
Z
Y

FIG. 3

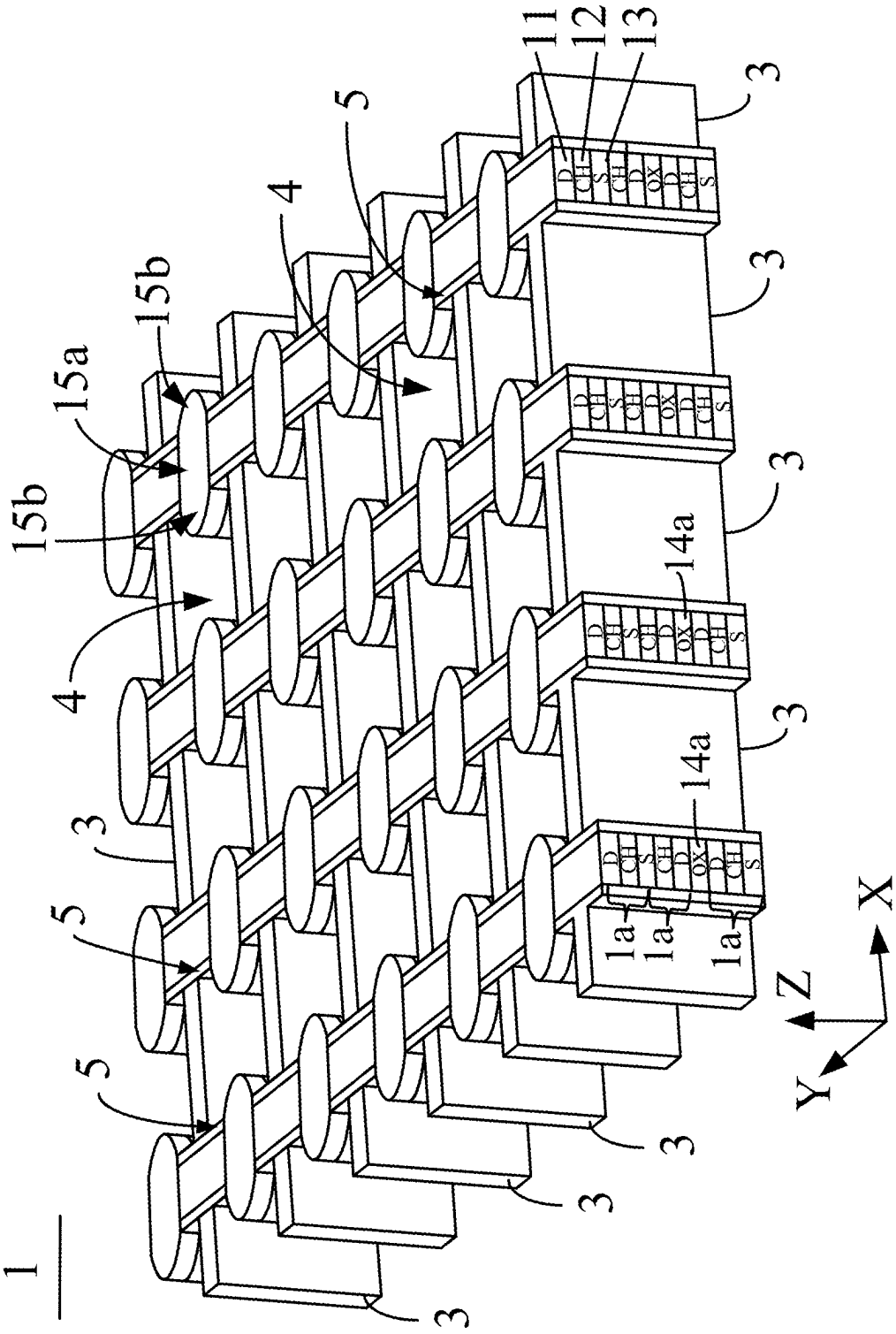

FIG. 4

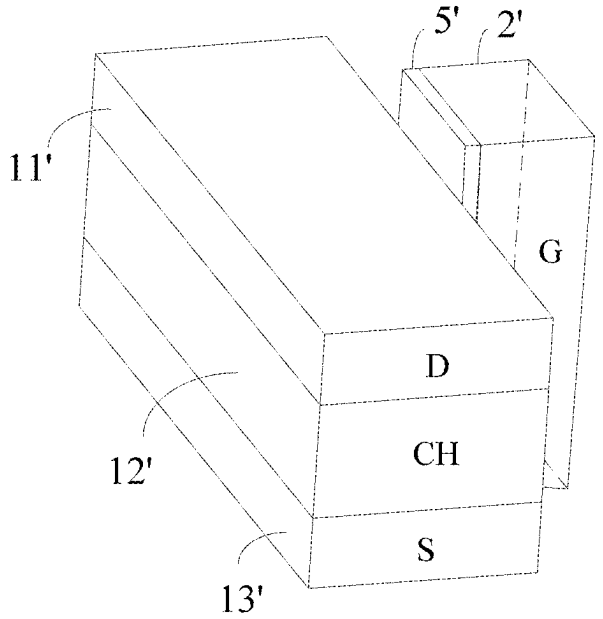

FIG. 5

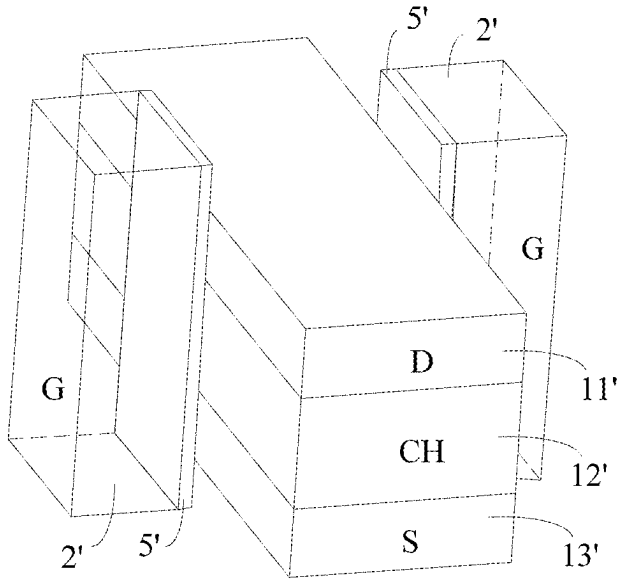

FIG. 6

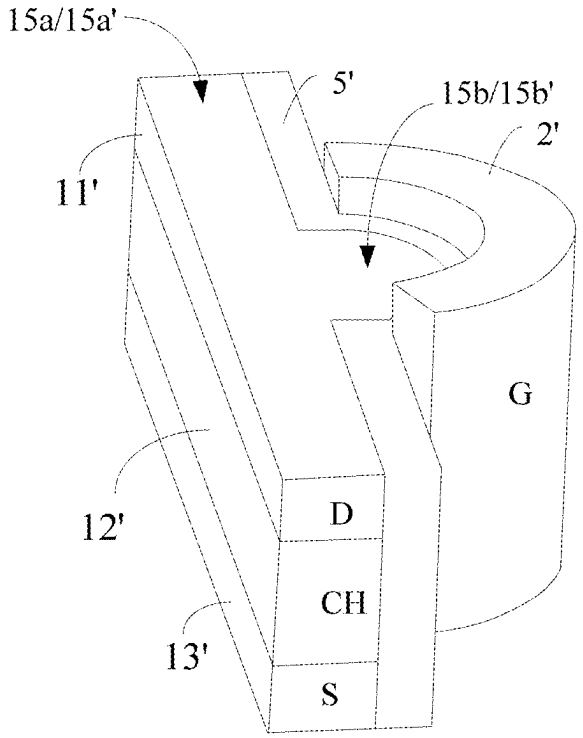

FIG. 7

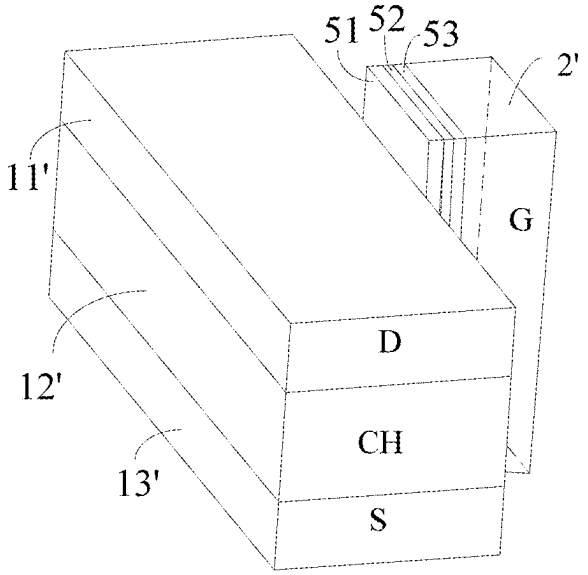

FIG. 8

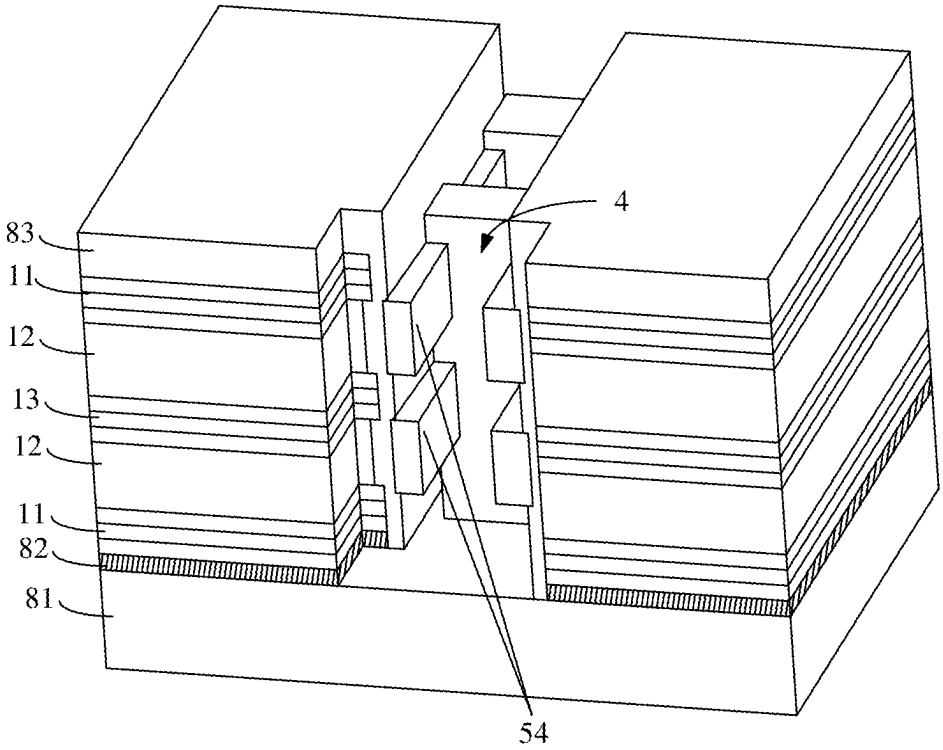

FIG. 9

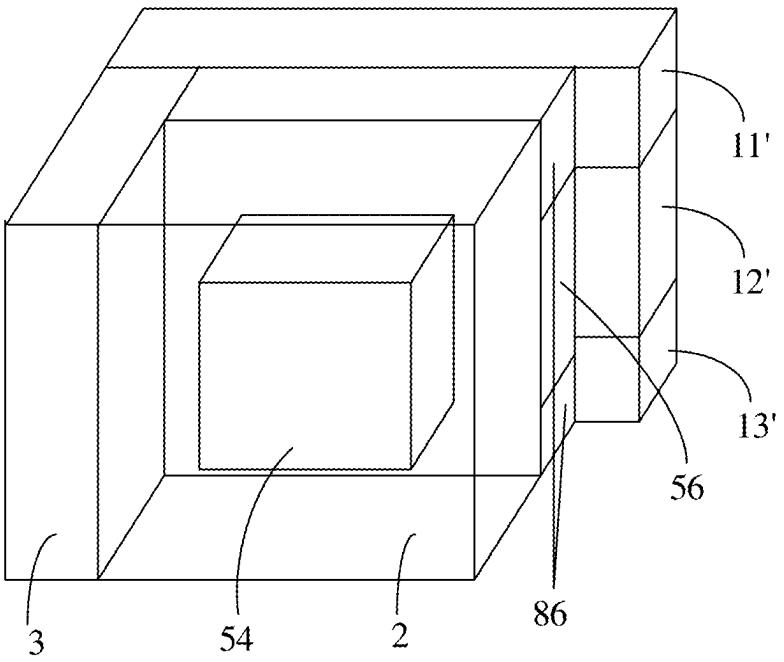

FIG. 10

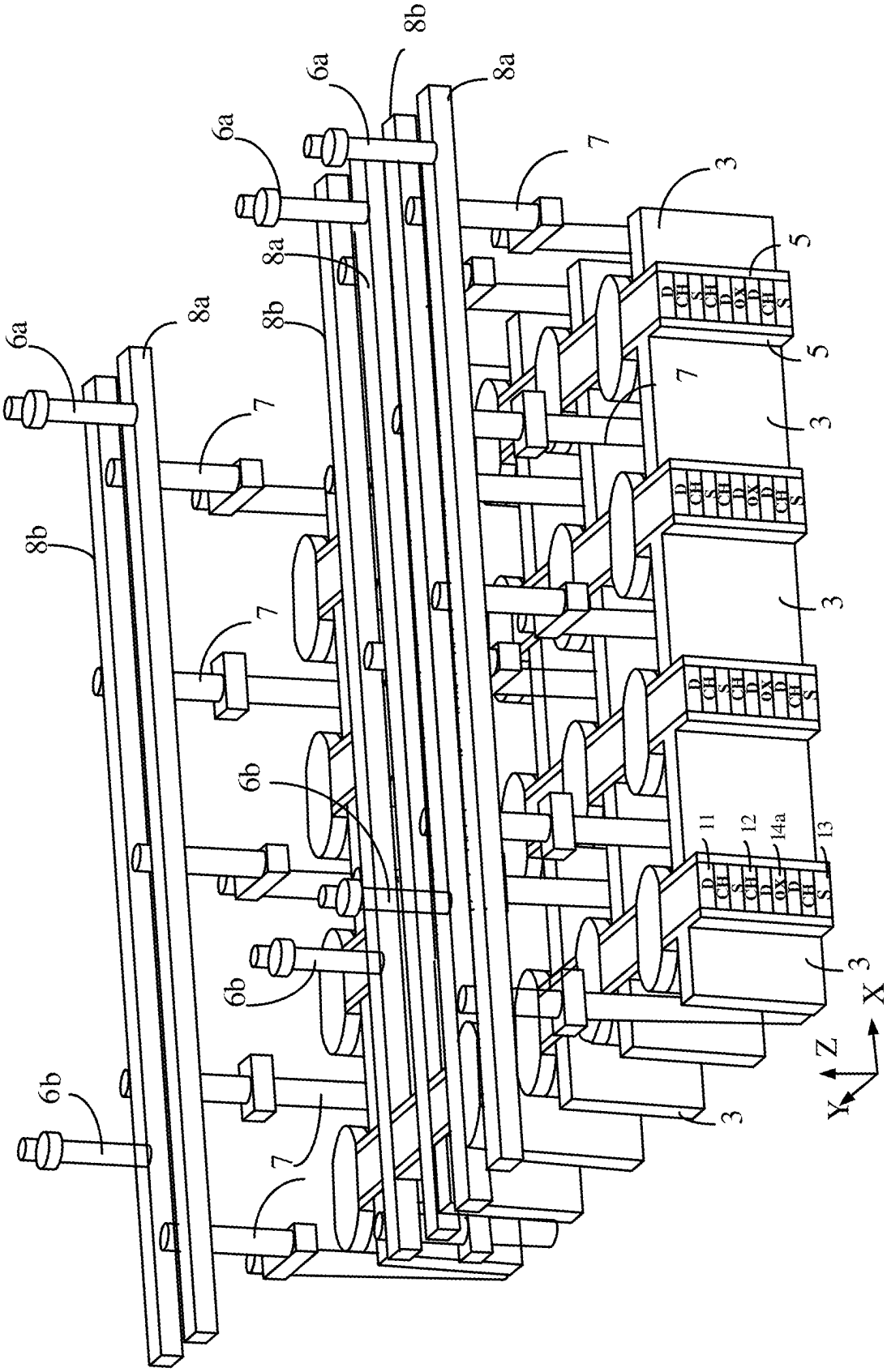

FIG. 11

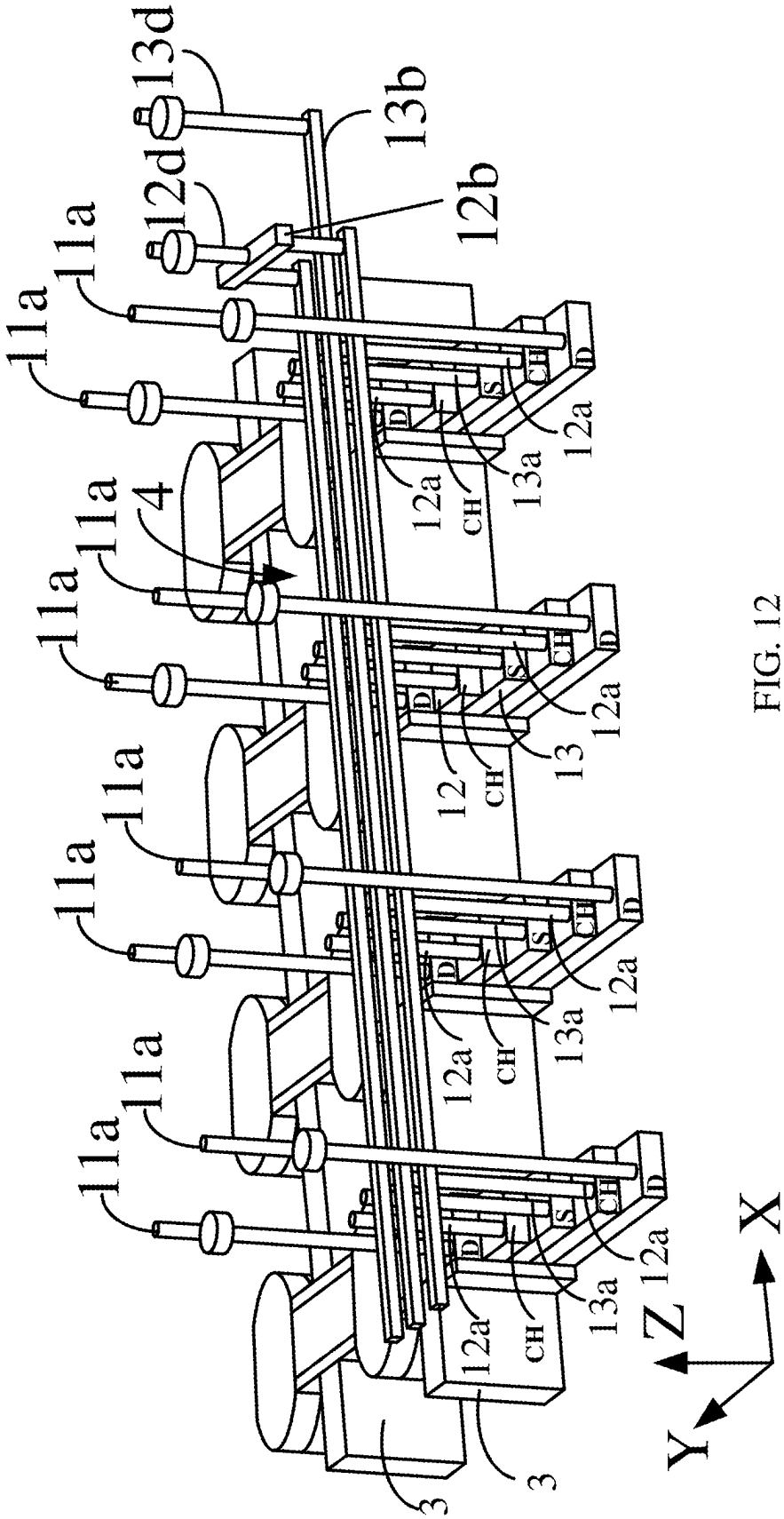

FIG. 12

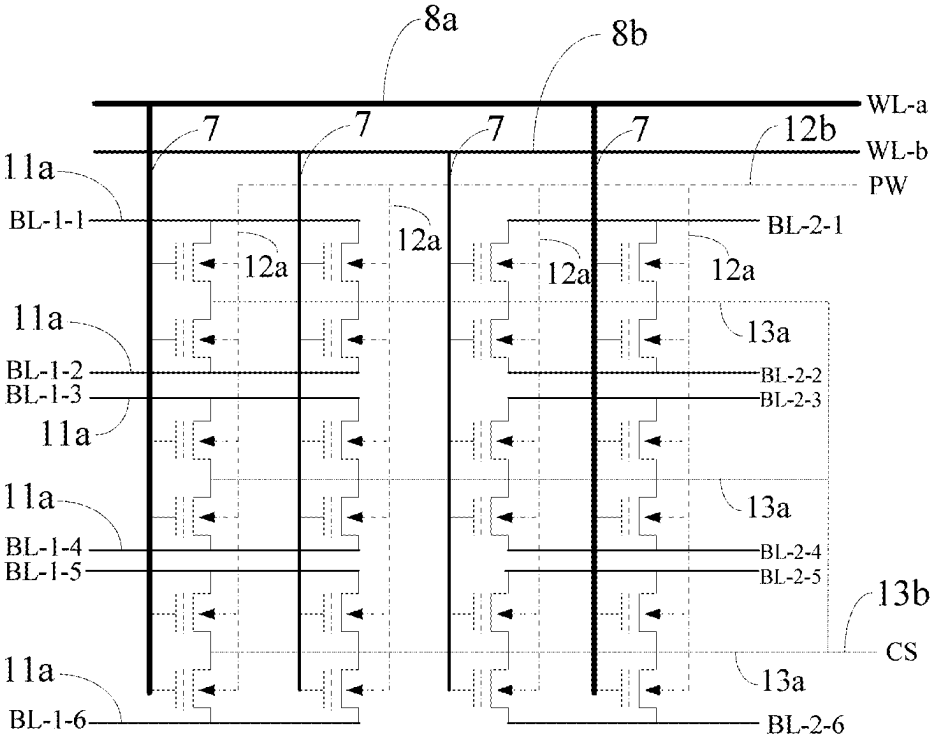
8a
8b
WL-a
WL-b
PW
7
12b
11a
BL-1-1
BL-2-1
12a
13a
BL-1-2
BL-2-2
BL-1-3
BL-2-3
BL-1-4
BL-2-4
BL-1-5
BL-2-5
13b
CS
BL-1-6
BL-2-6

FIG. 13

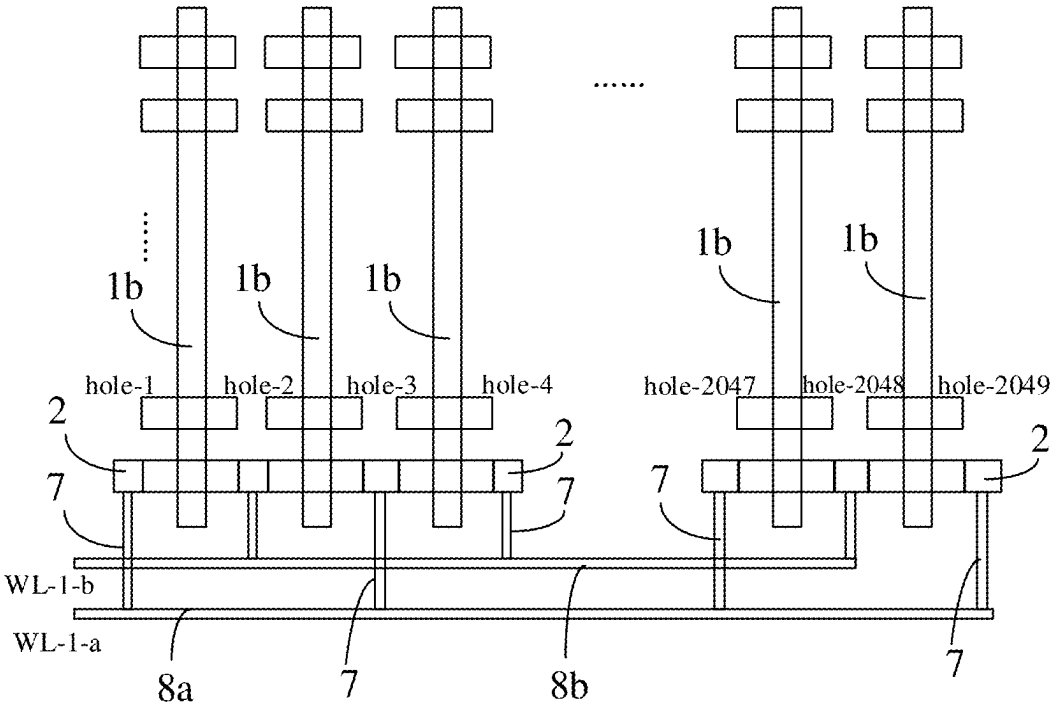
1b
hole-1
hole-2
hole-3
hole-4
hole-2047
hole-2048
hole-2049
2
7
WL-1-b
WL-1-a
8a
8b

FIG. 14

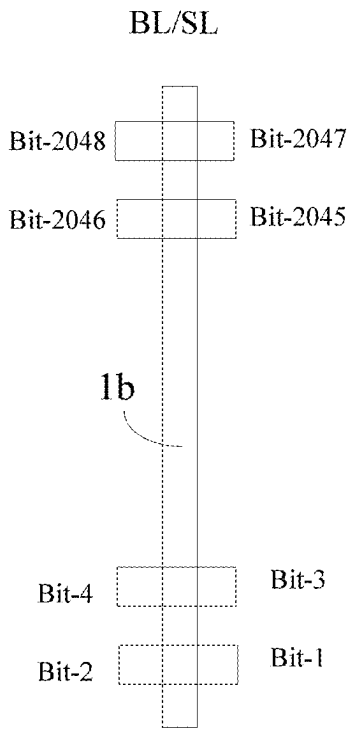
BL/SL
Bit-2048
Bit-2047
Bit-2046
Bit-2045
1b
Bit-4
Bit-3
Bit-2
Bit-1

FIG. 15

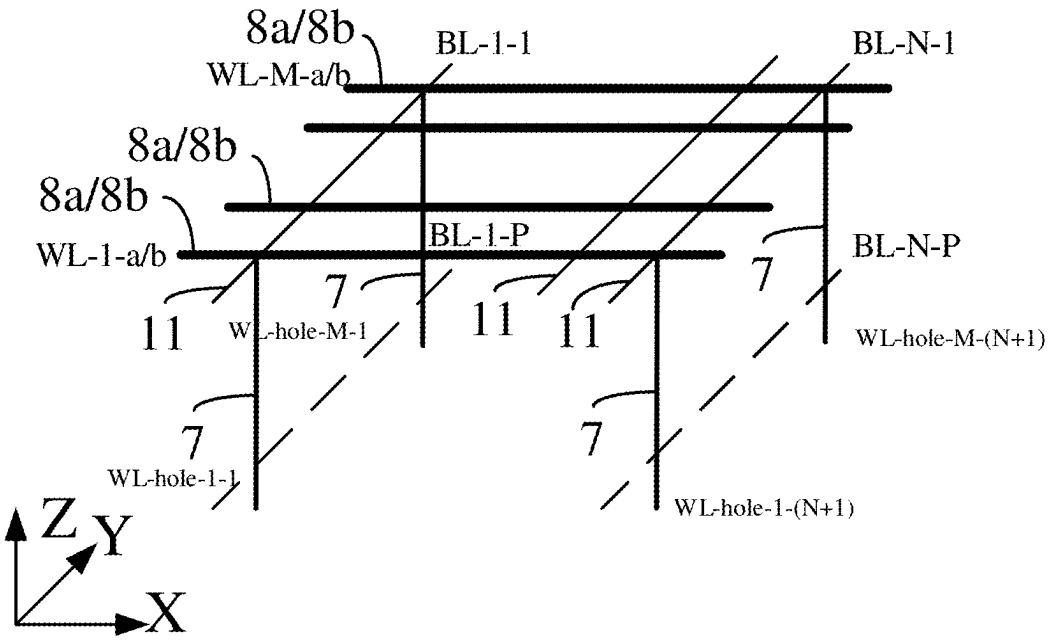
8a/8b
BL-1-1
BL-N-1
WL-M-a/b
8a/8b
8a/8b
WL-1-a/b
BL-1-P
BL-N-P
7
7
11
WL-hole-M-1
11
11
WL-hole-M-(N+1)
7
7
WL-hole-1-1
WL-hole-1-(N+1)
Z
Y
X

FIG. 16

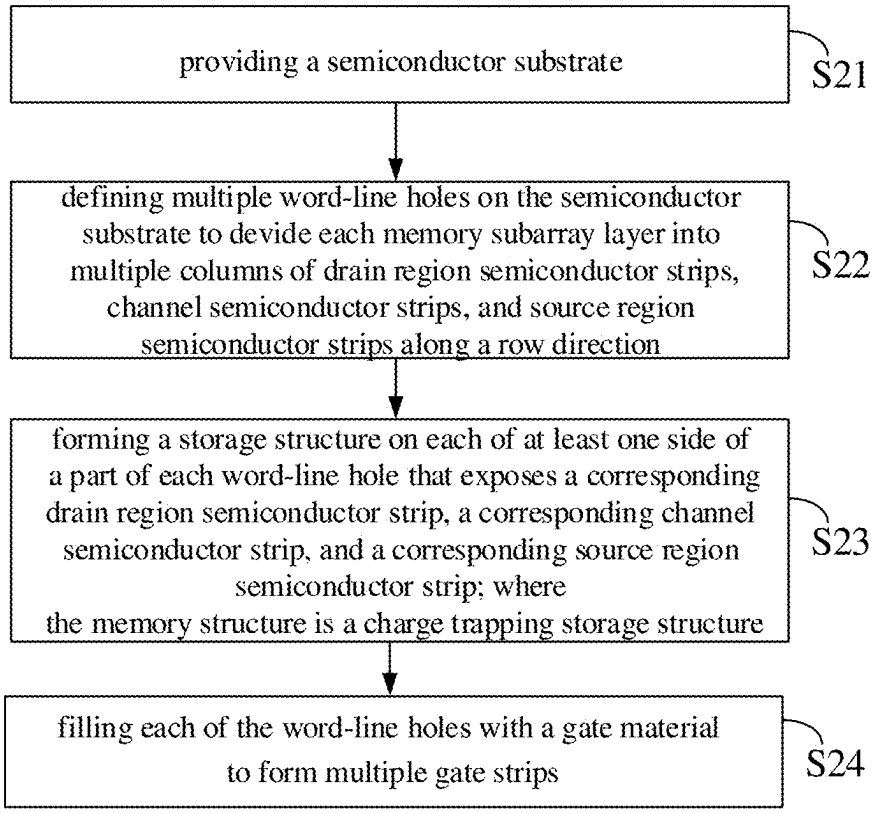
providing a semiconductor substrate
S21
defining multiple word-line holes on the semiconductor substrate to devide each memory subarray layer into multiple columns of drain region semiconductor strips, channel semiconductor strips, and source region semiconductor strips along a row direction
S22
forming a storage structure on each of at least one side of a part of each word-line hole that exposes a corresponding drain region semiconductor strip, a corresponding channel semiconductor strip, and a corresponding source region semiconductor strip; where the memory structure is a charge trapping storage structure
S23
filling each of the word-line holes with a gate material to form multiple gate strips
S24

FIG. 17

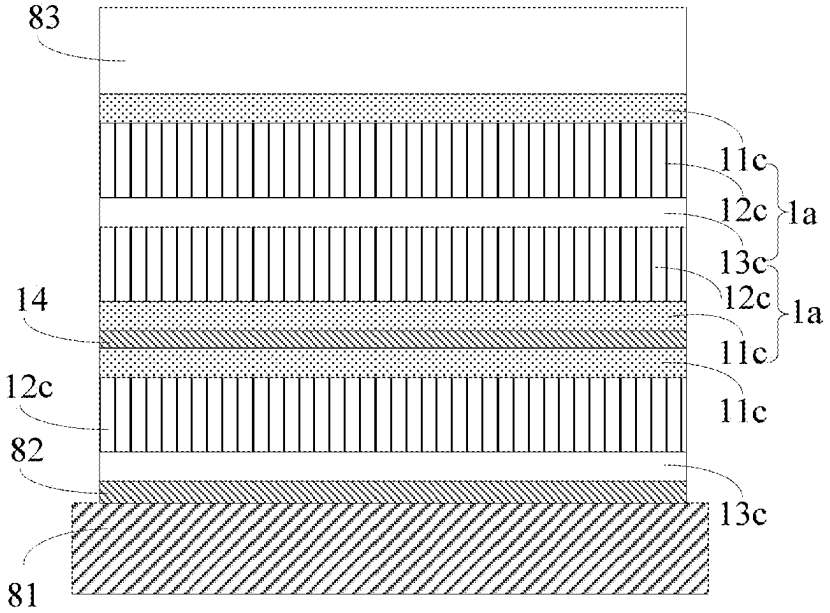
83
11c
12c
1a
13c
12c
1a
14
11c
12c
11c
82
13c
81

FIG. 18

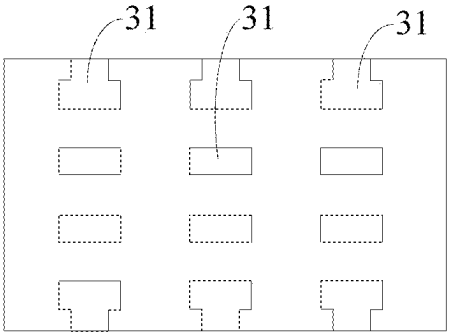

FIG. 19

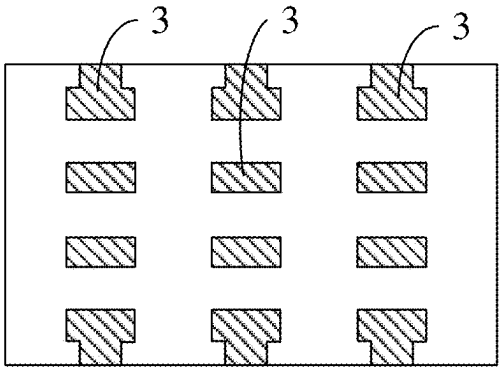

FIG. 20

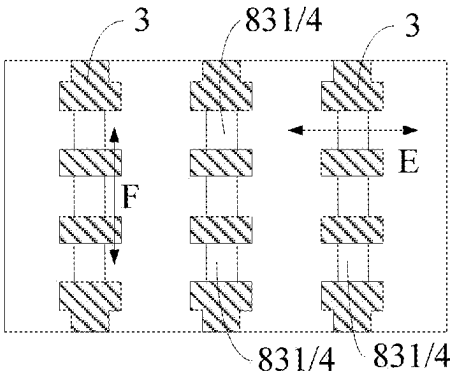

FIG. 21

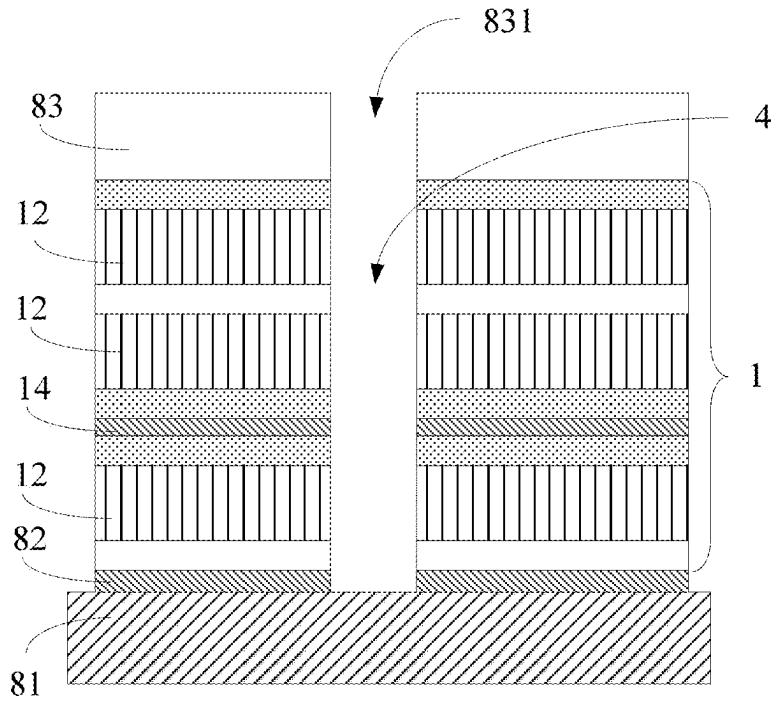

FIG. 22

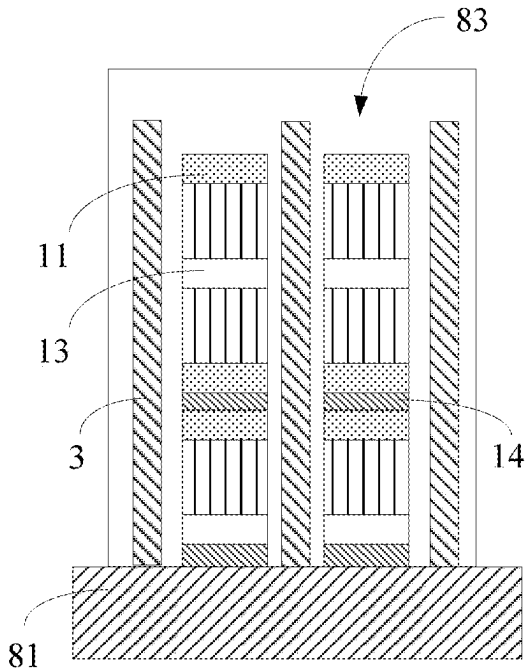

FIG. 23

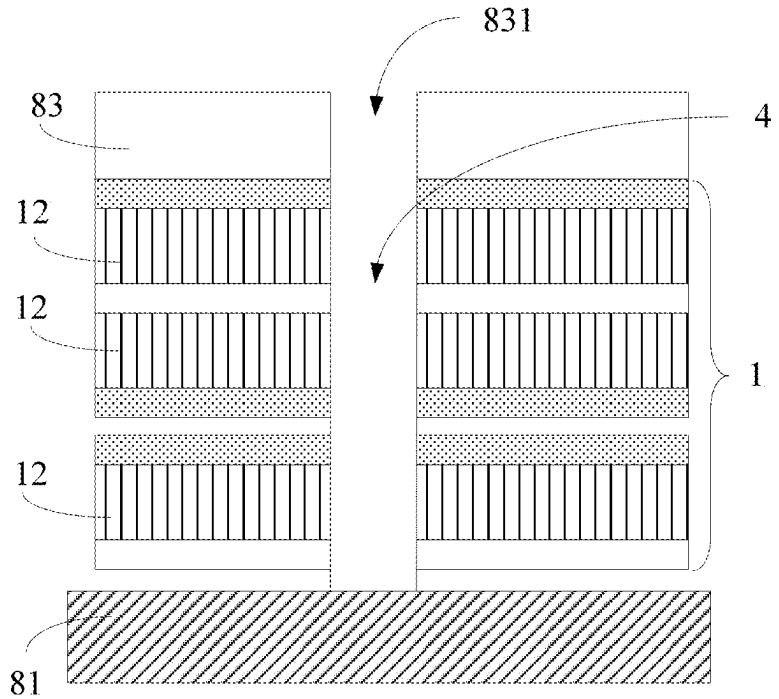

FIG. 24a

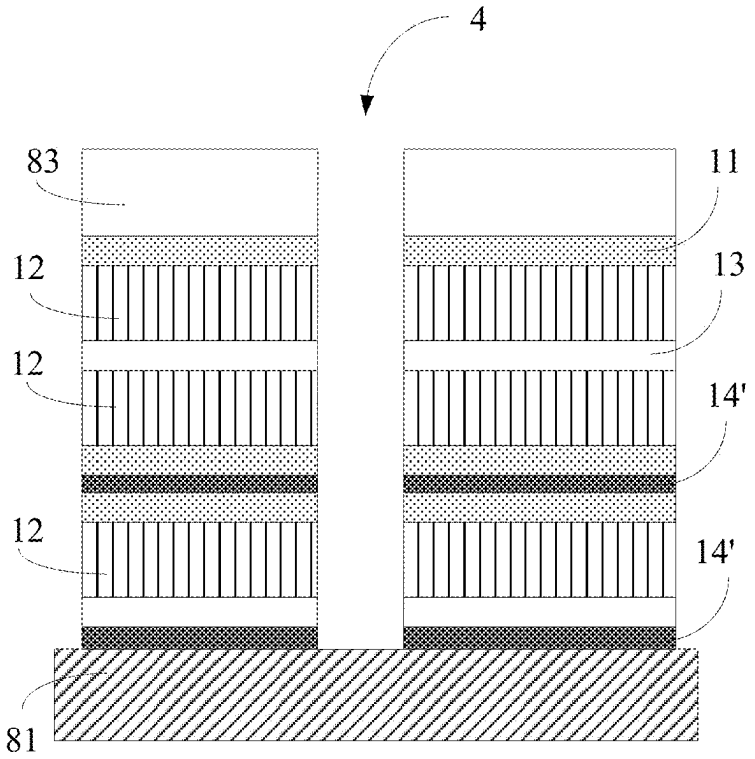

FIG. 24b

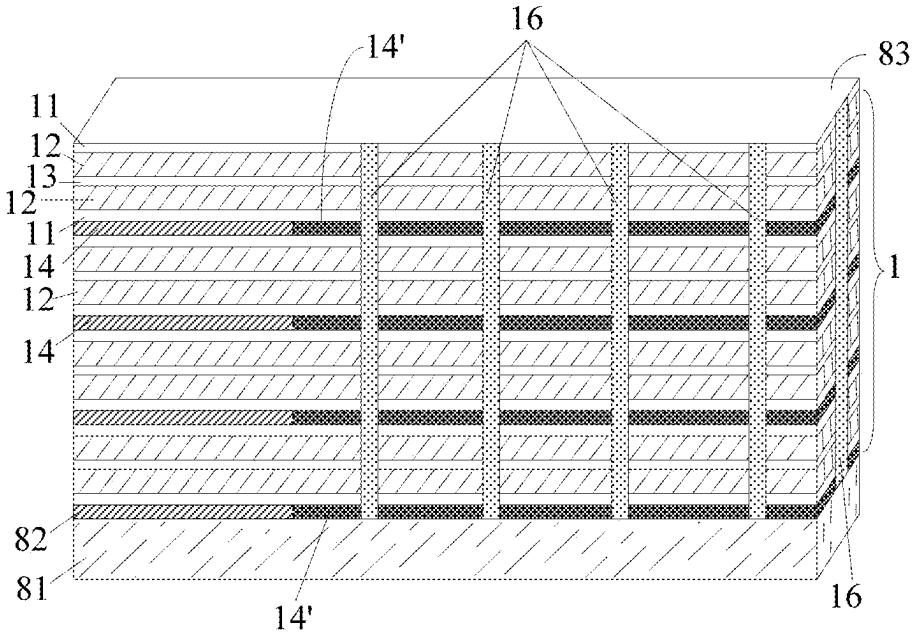

FIG. 25a

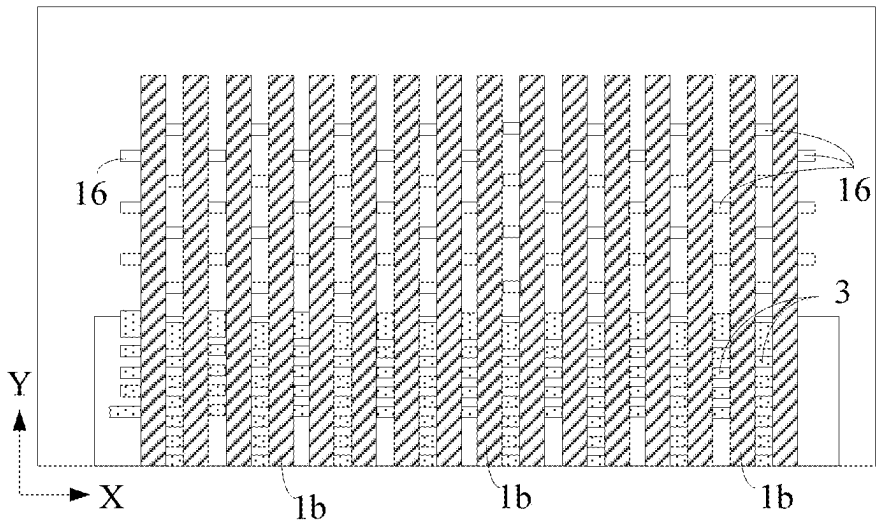

FIG. 25b

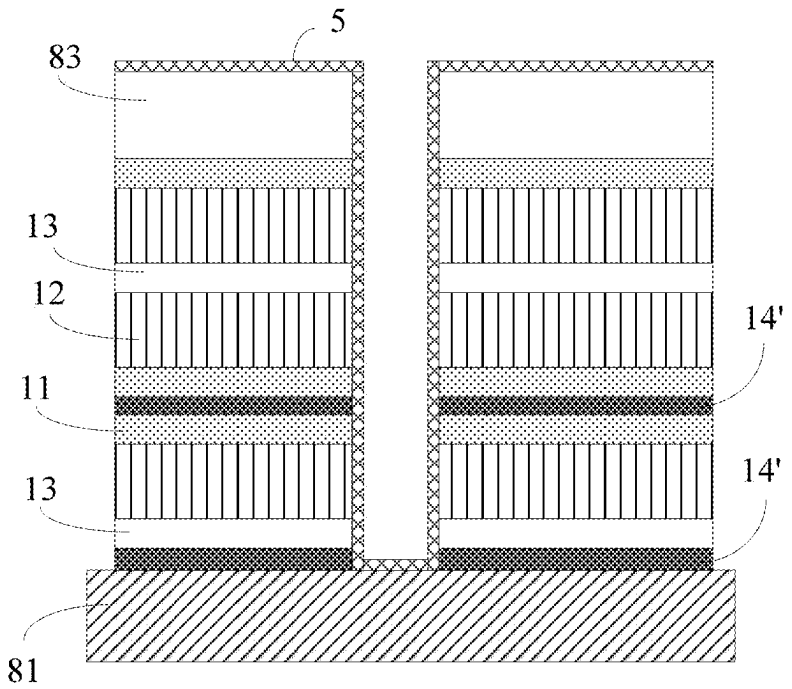

FIG. 26

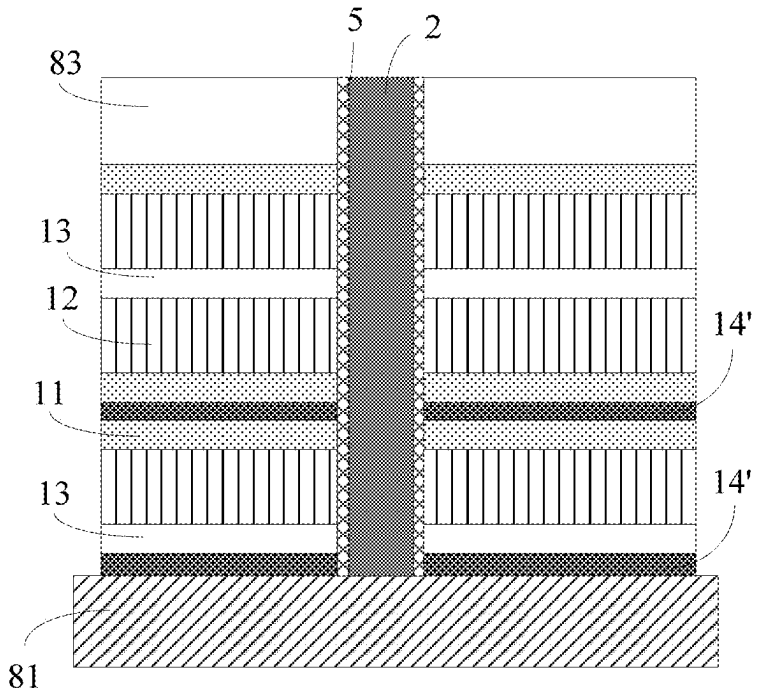

FIG. 27

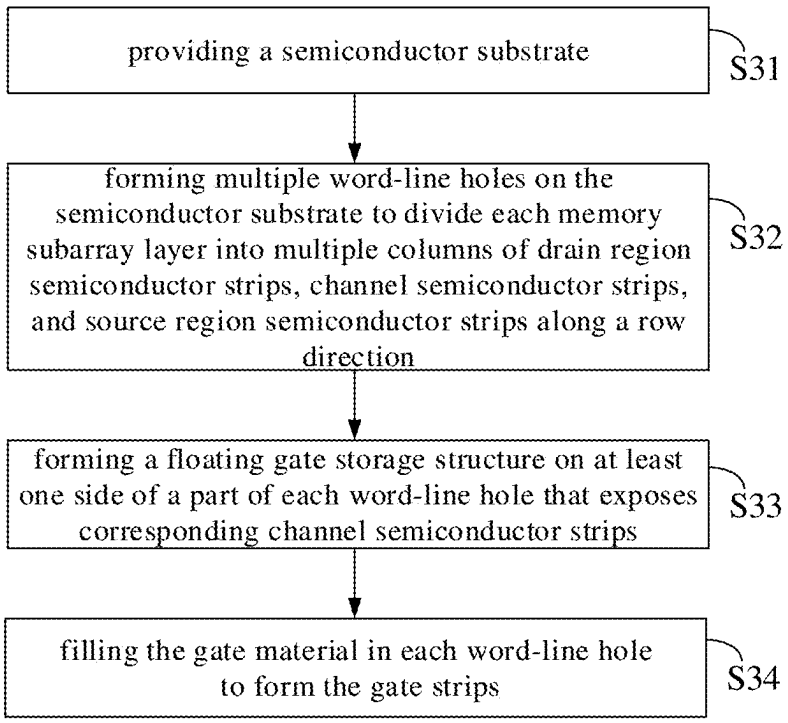
providing a semiconductor substrate
S31
forming multiple word-line holes on the semiconductor substrate to divide each memory subarray layer into multiple columns of drain region semiconductor strips, channel semiconductor strips, and source region semiconductor strips along a row direction
S32
forming a floating gate storage structure on at least one side of a part of each word-line hole that exposes corresponding channel semiconductor strips
S33
filling the gate material in each word-line hole to form the gate strips
S34

FIG. 28

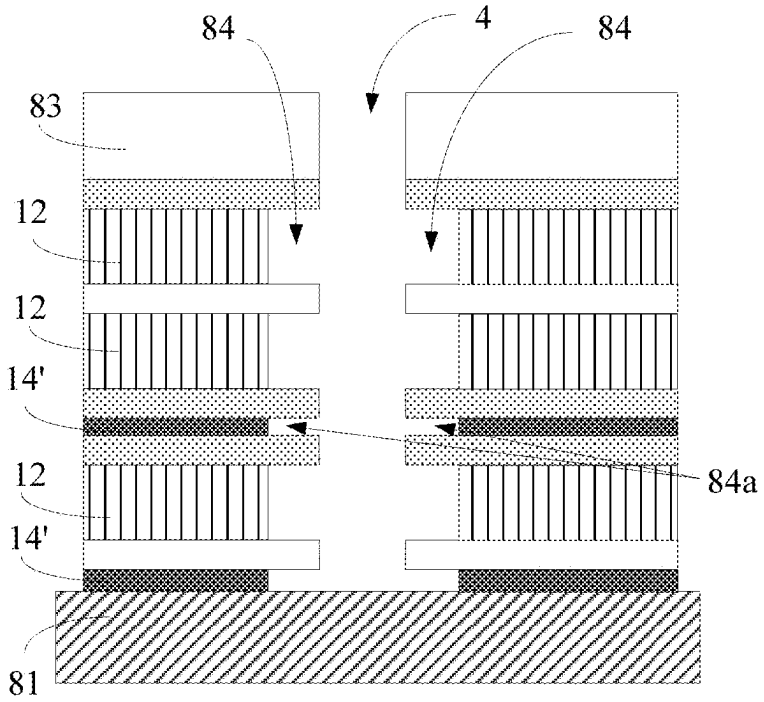
84
4
84
83
12
12
14'
84a
12
14'
81

FIG. 29

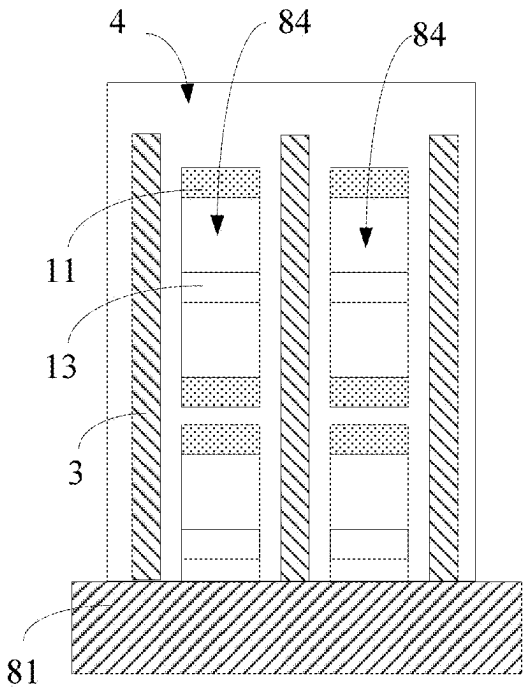

FIG. 30

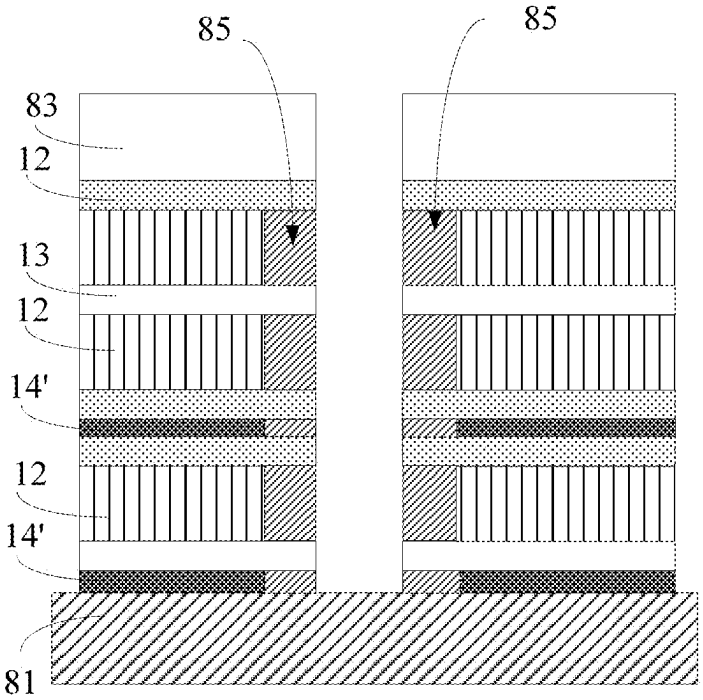

FIG. 31

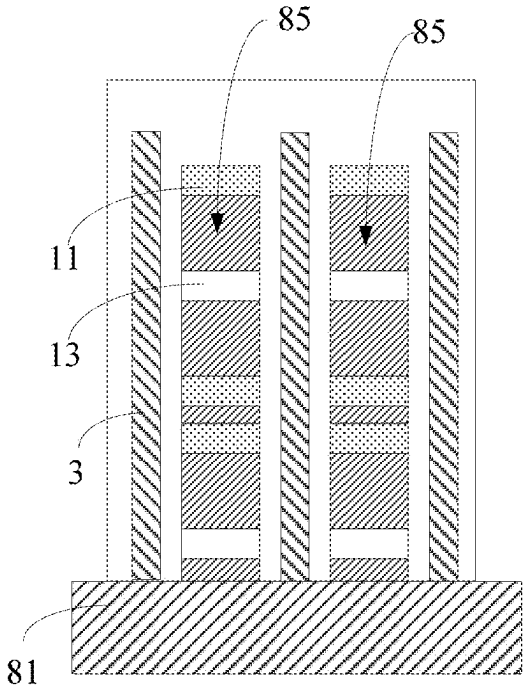

FIG. 32

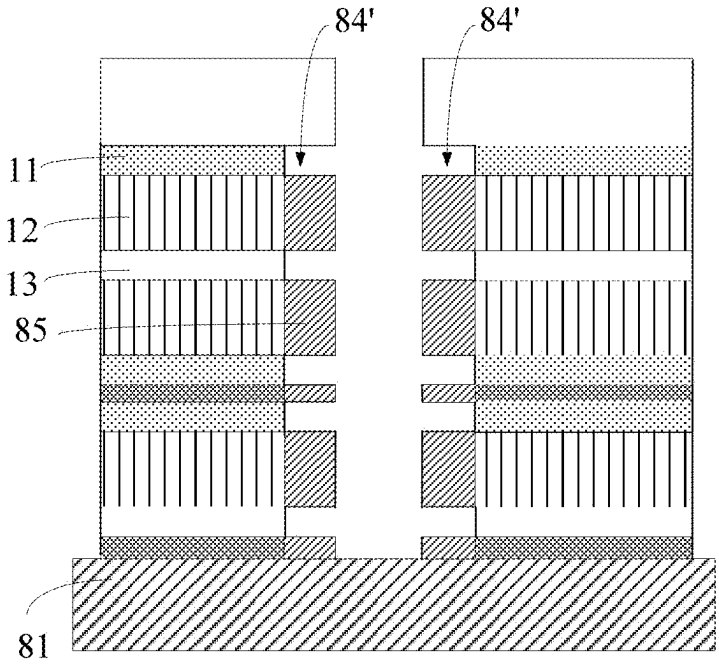

FIG. 33

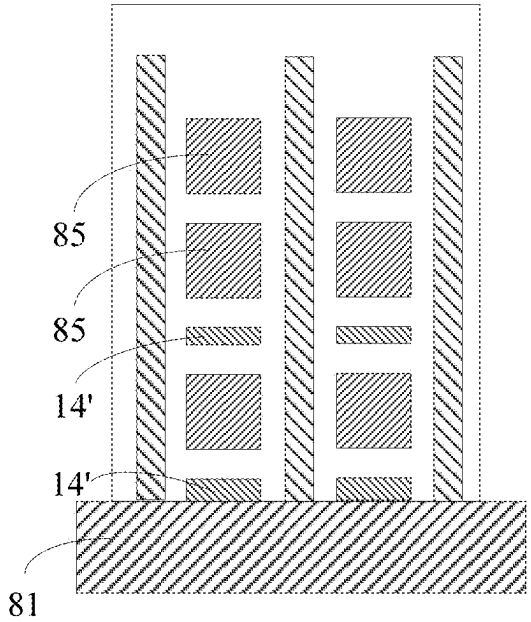

FIG. 34

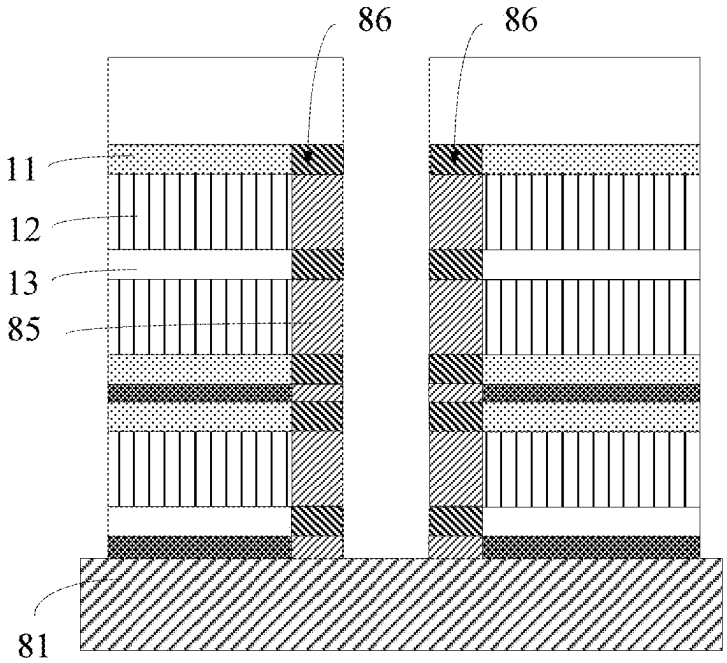

FIG. 35

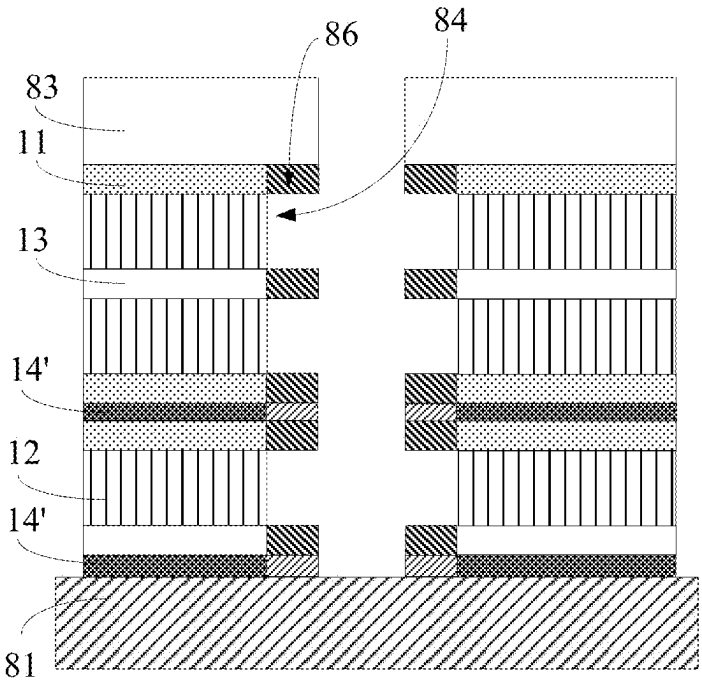

FIG. 36a

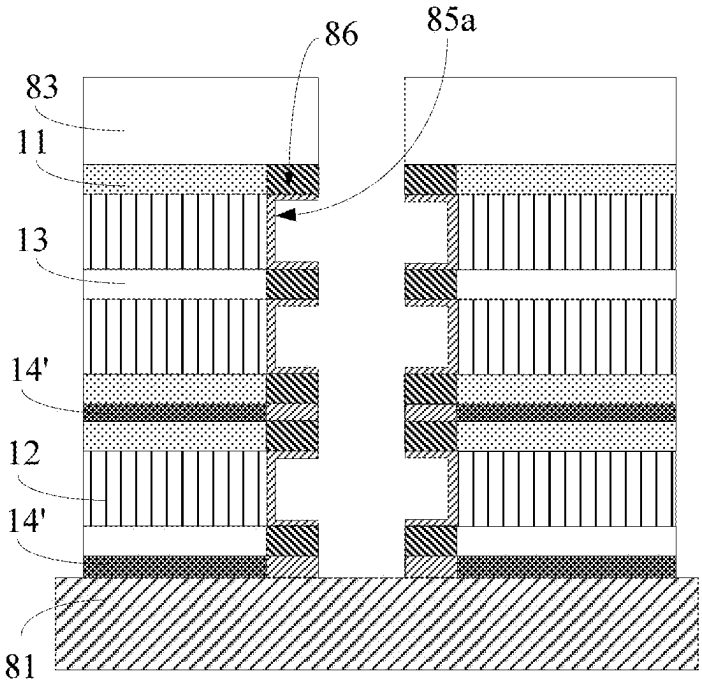

FIG. 36b

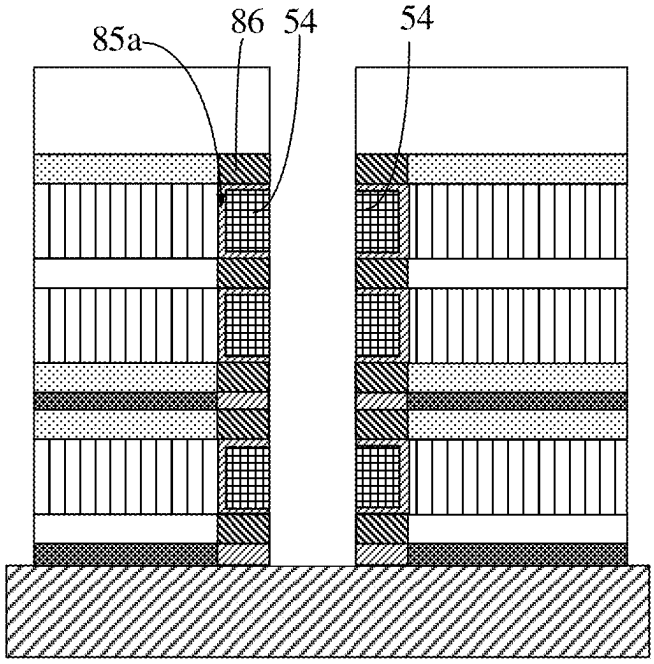

FIG. 37

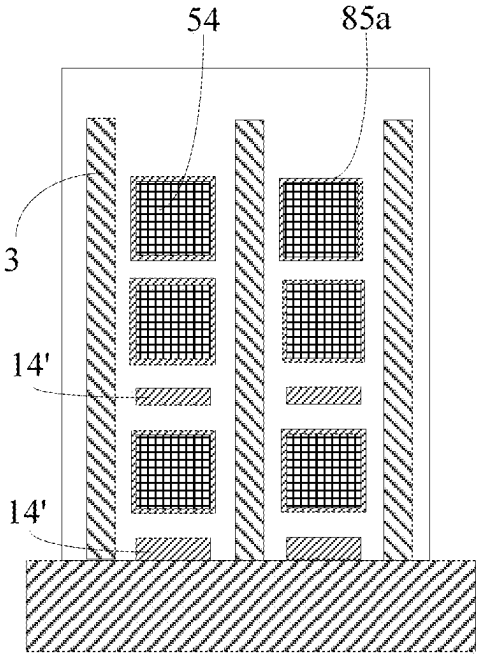

FIG. 38

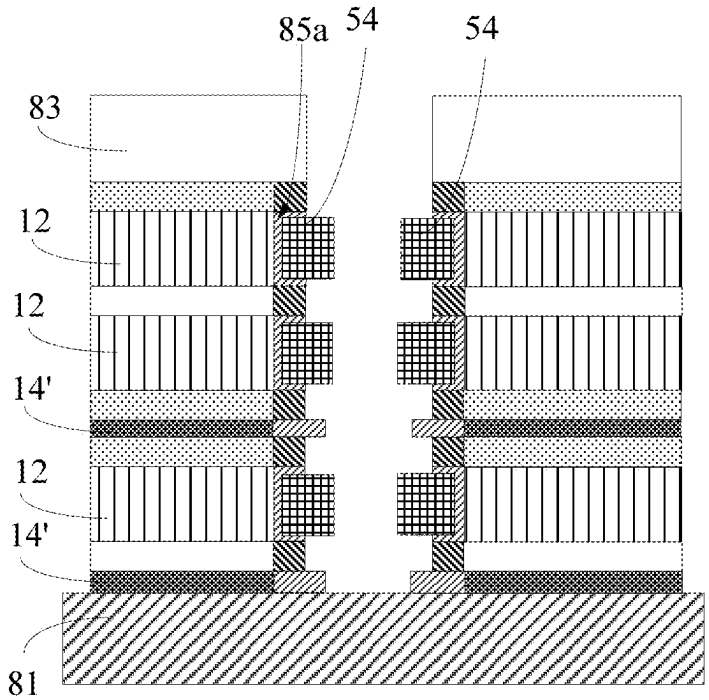

FIG. 39a

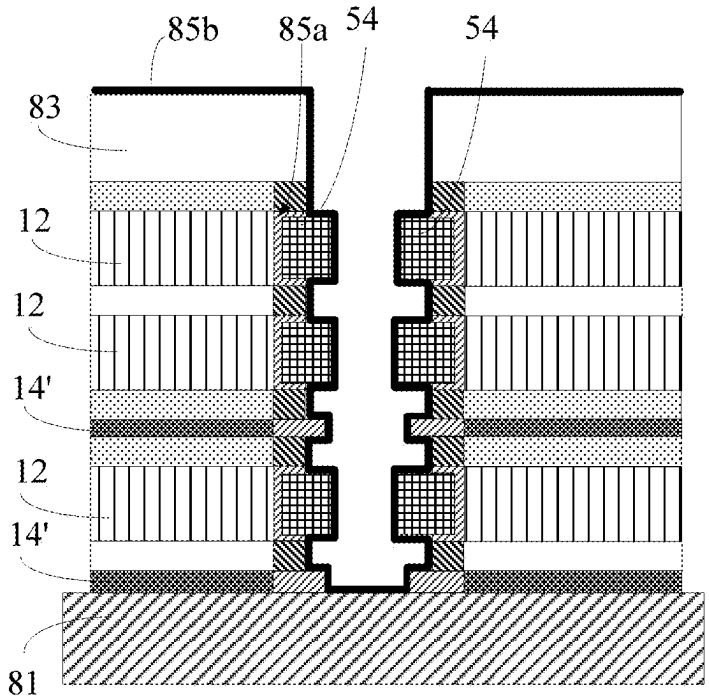

FIG. 39b

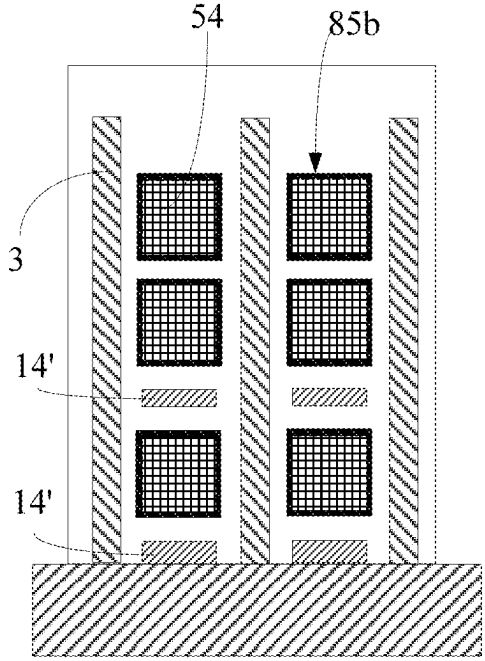

FIG. 40

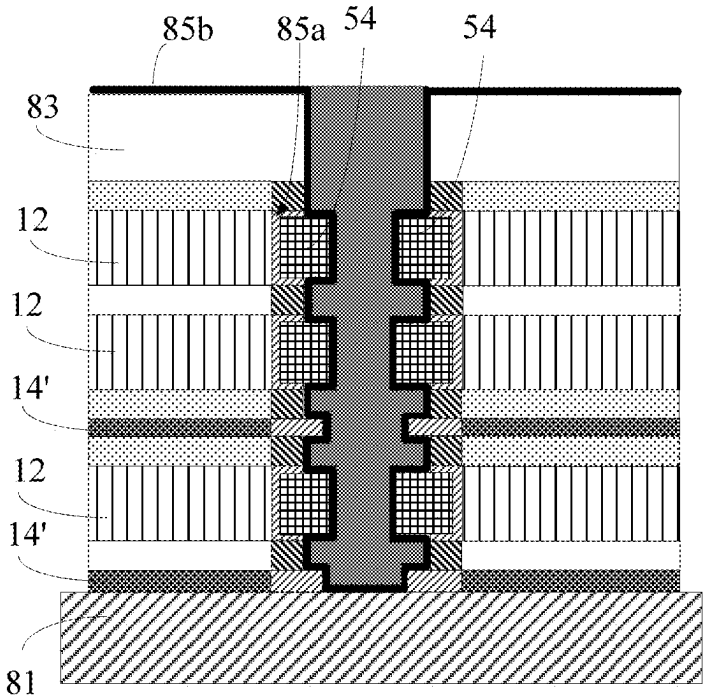

FIG. 41

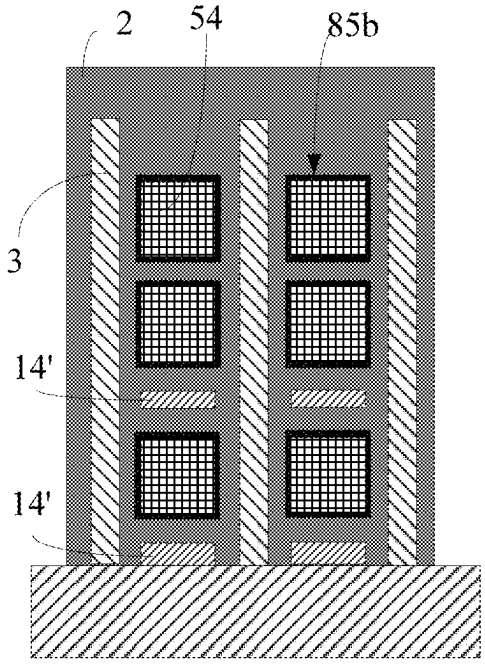

FIG. 42

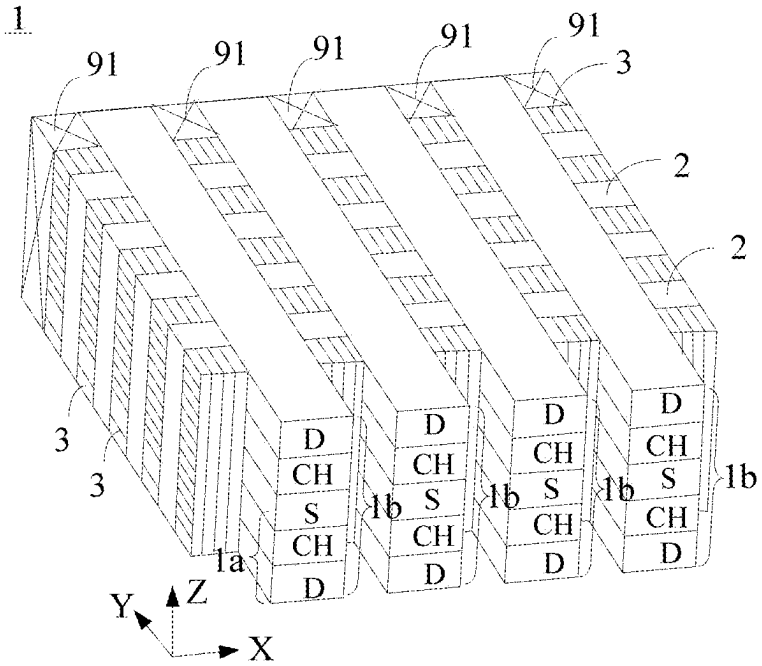

FIG. 43a

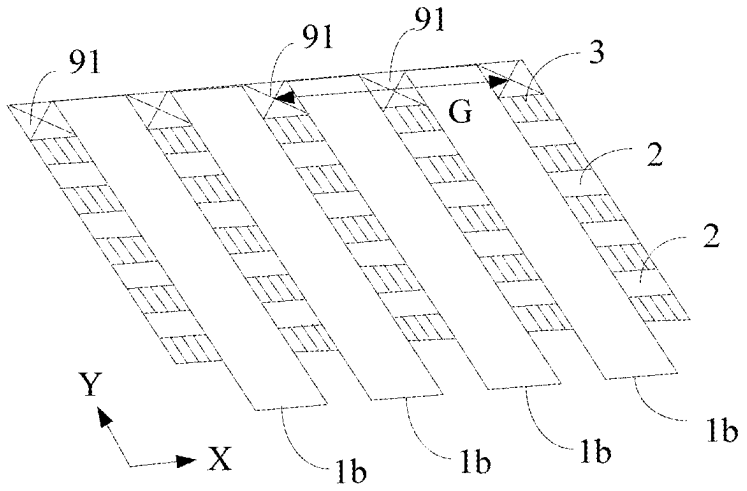

FIG. 43b

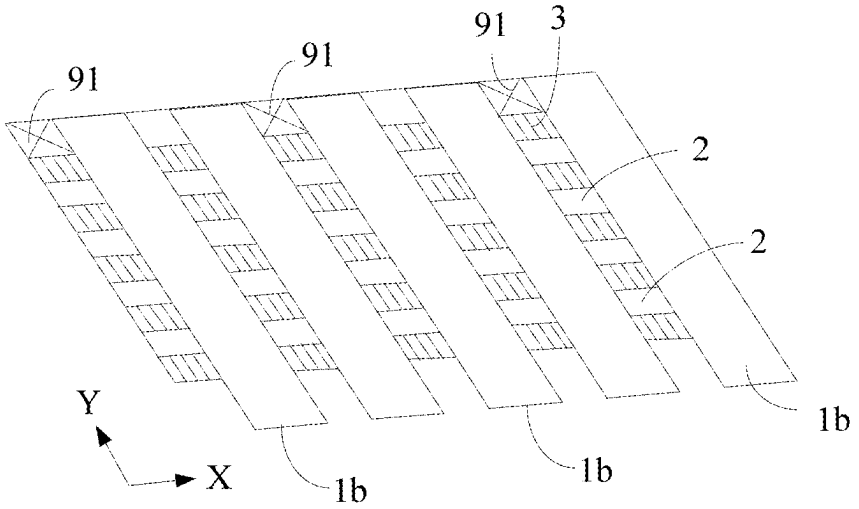

FIG. 44a

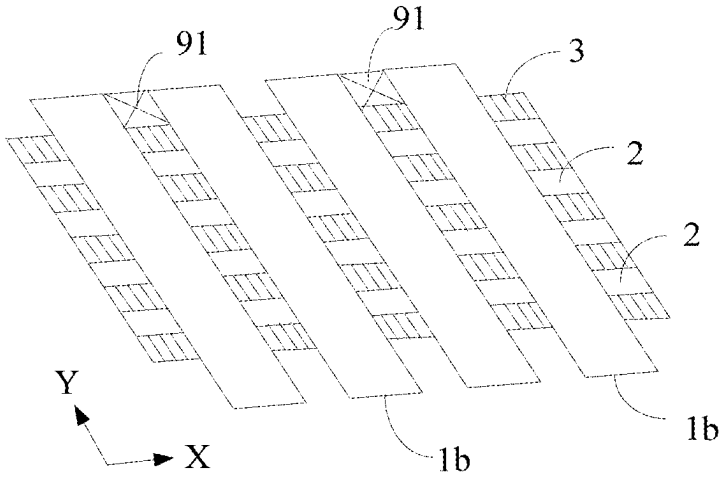

FIG. 44b

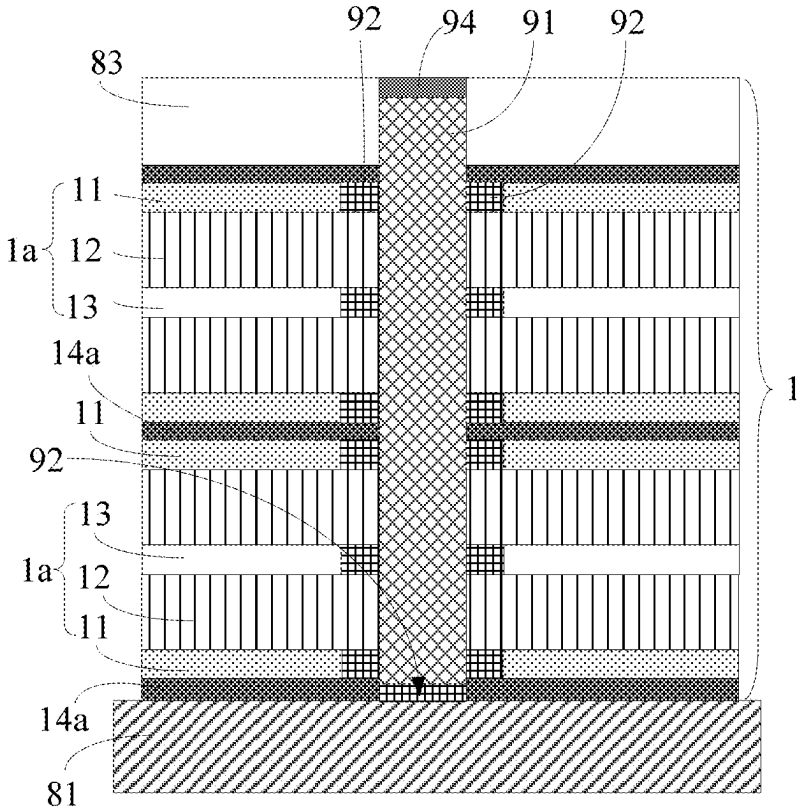

FIG. 45

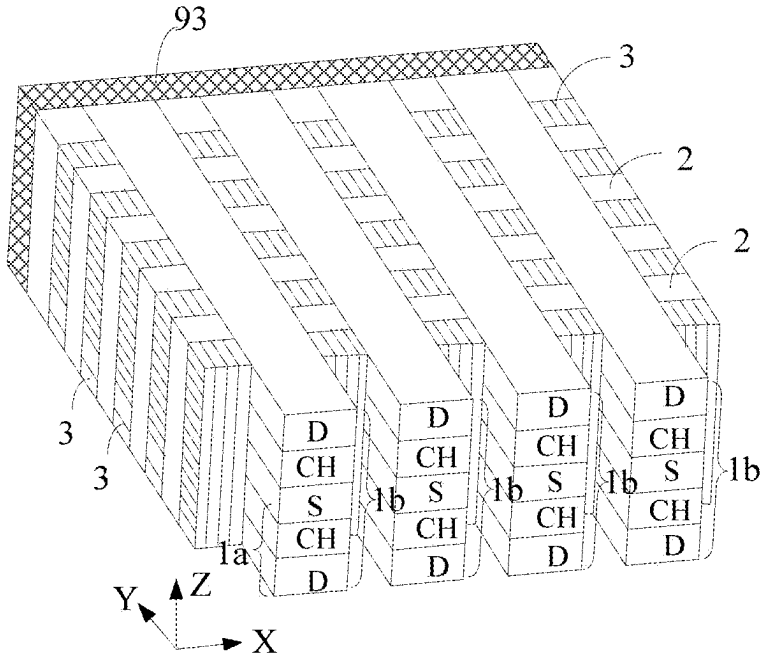

FIG. 46a

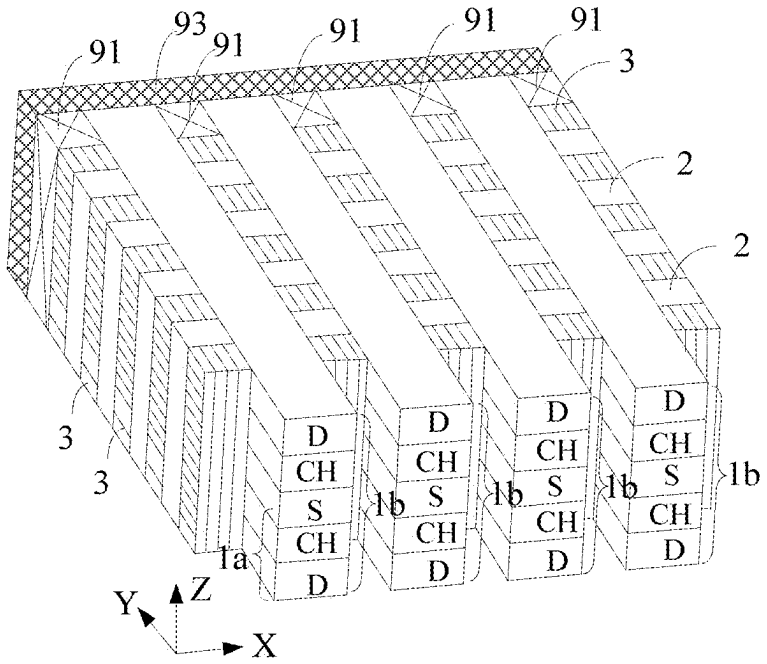

FIG. 46b

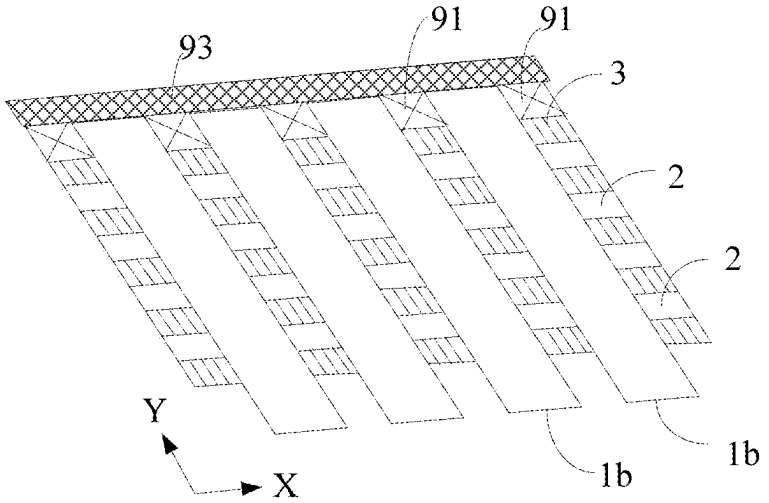

FIG. 47

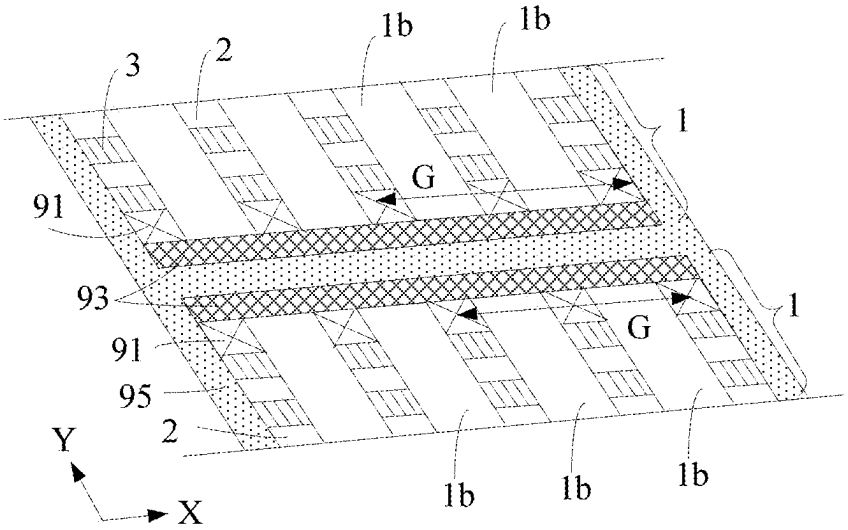

FIG. 48

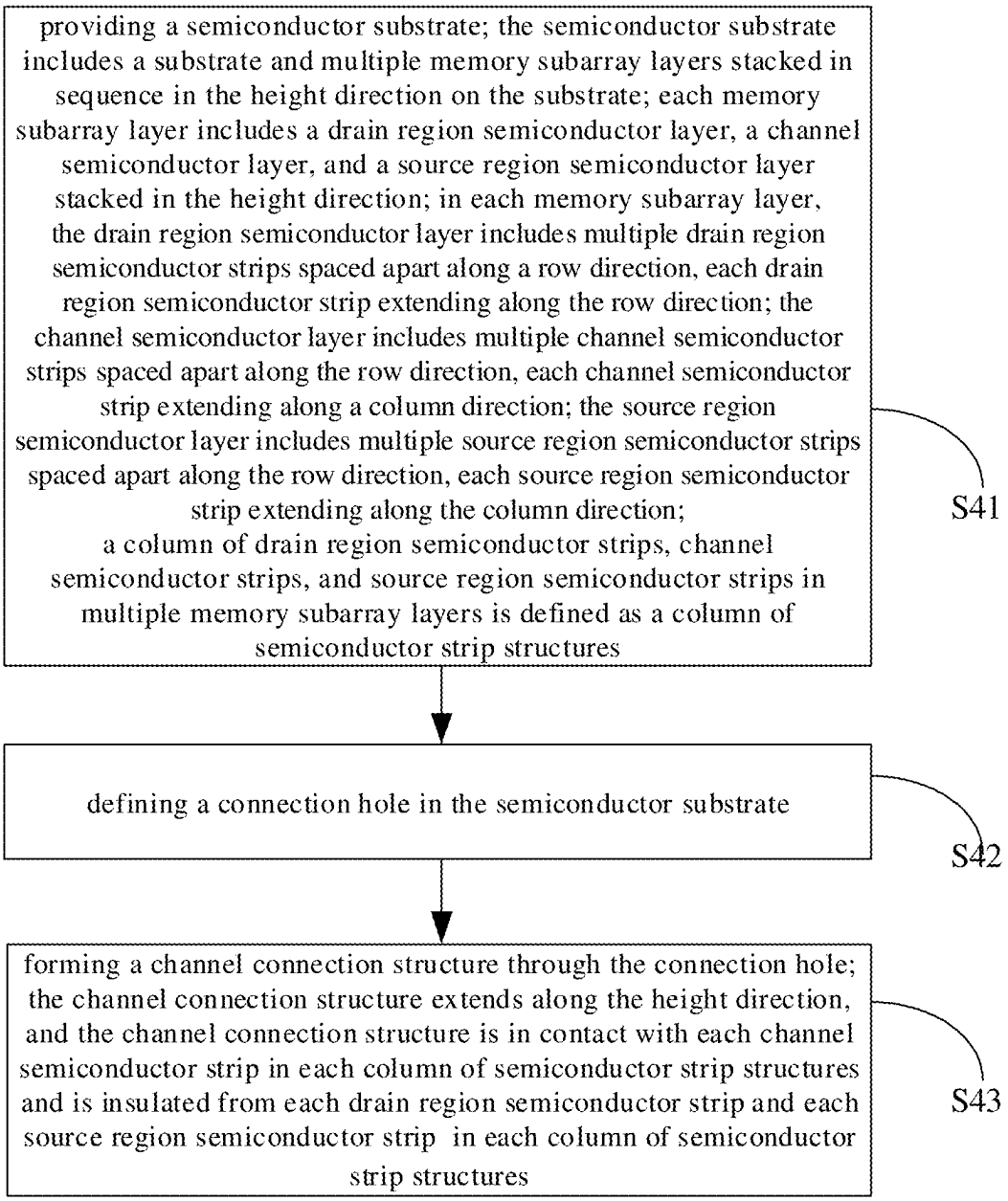
providing a semiconductor substrate; the semiconductor substrate includes a substrate and multiple memory subarray layers stacked in sequence in the height direction on the substrate; each memory subarray layer includes a drain region semiconductor layer, a channel semiconductor layer, and a source region semiconductor layer stacked in the height direction; in each memory subarray layer, the drain region semiconductor layer includes multiple drain region semiconductor strips spaced apart along a row direction, each drain region semiconductor strip extending along the row direction; the channel semiconductor layer includes multiple channel semiconductor strips spaced apart along the row direction, each channel semiconductor strip extending along a column direction; the source region semiconductor layer includes multiple source region semiconductor strips spaced apart along the row direction, each source region semiconductor strip extending along the column direction;
a column of drain region semiconductor strips, channel semiconductor strips, and source region semiconductor strips in multiple memory subarray layers is defined as a column of semiconductor strip structures
S41
defining a connection hole in the semiconductor substrate
S42
forming a channel connection structure through the connection hole; the channel connection structure extends along the height direction, and the channel connection structure is in contact with each channel semiconductor strip in each column of semiconductor strip structures and is insulated from each drain region semiconductor strip and each source region semiconductor strip in each column of semiconductor strip structures
S43

FIG. 49

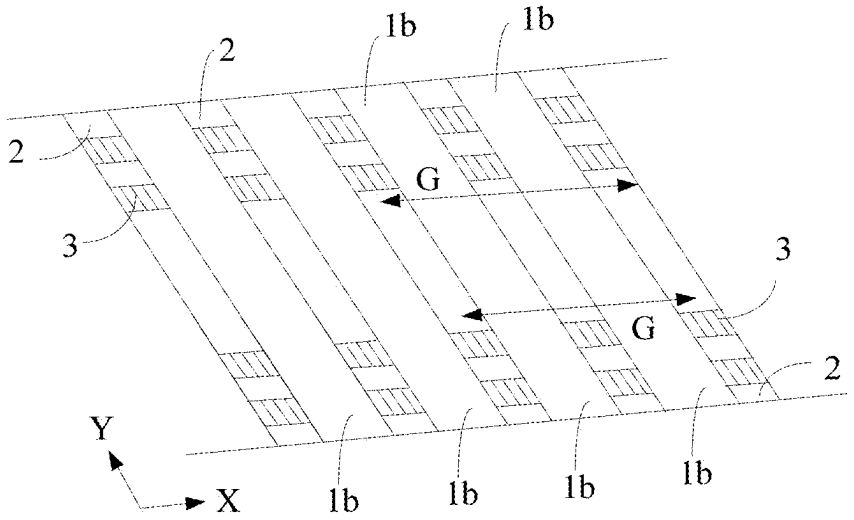
1b
1b
2
2
G
3
3
G
2
Y
X
1b
1b
1b
1b

FIG. 50

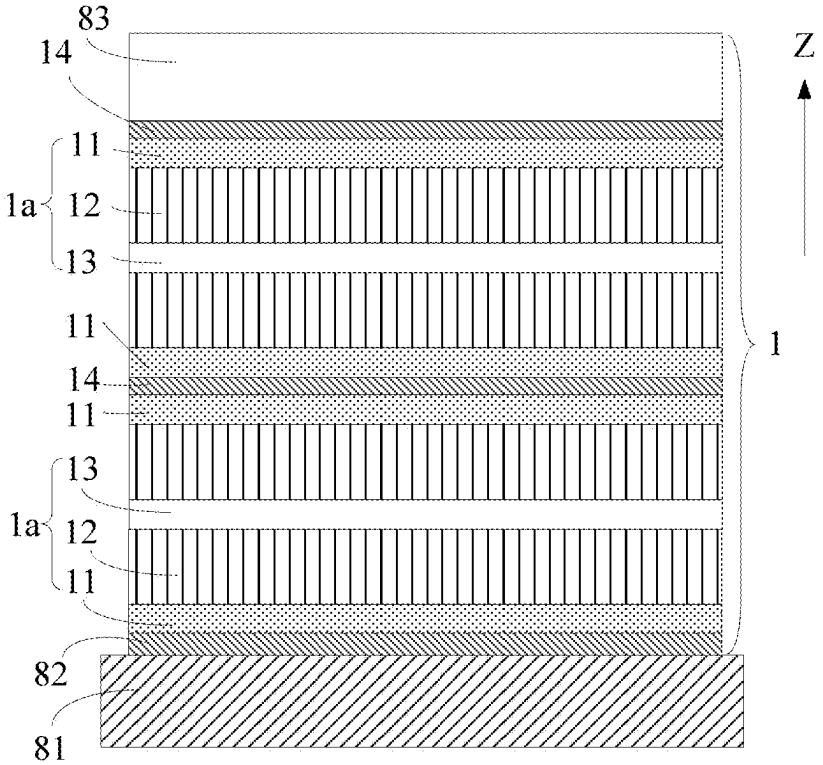
83
14
Z
11
1a
12
13
11
1
14
11
13
1a
12
11
82
81

FIG. 51

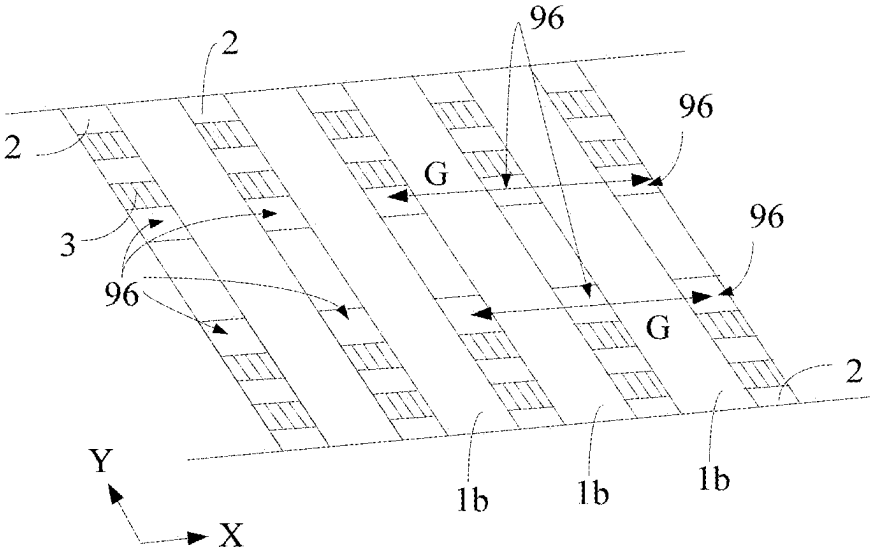
96
2
96
2
G
3
96
96
G
2
Y
1b
1b
1b
X

FIG. 52

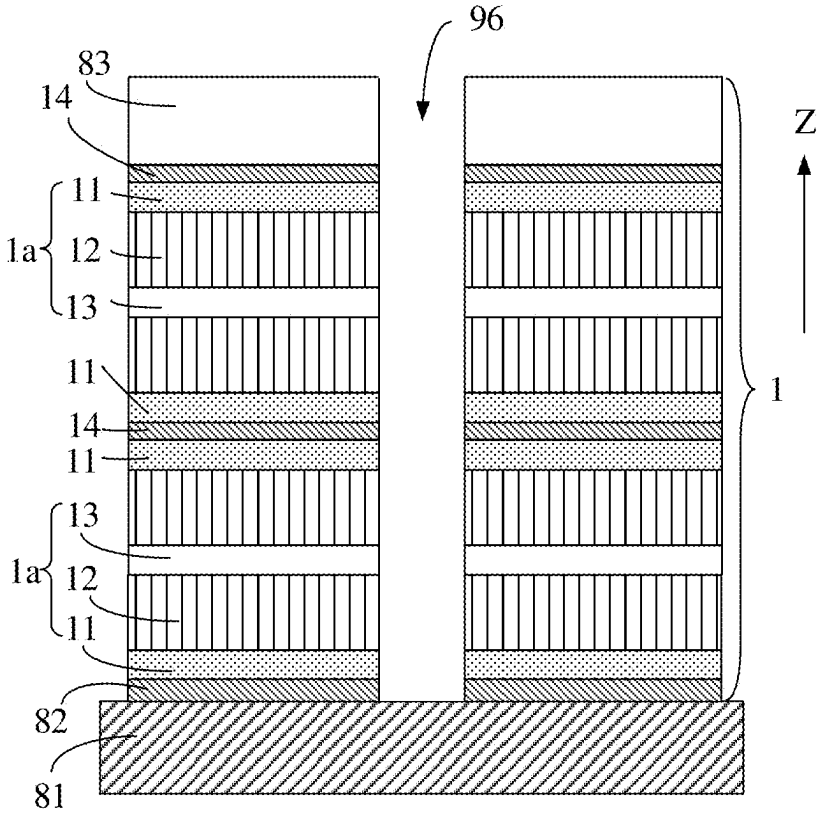
96
83
14
Z
11
1a
12
13
11
1
14
11
13
1a
12
11
82
81

FIG. 53

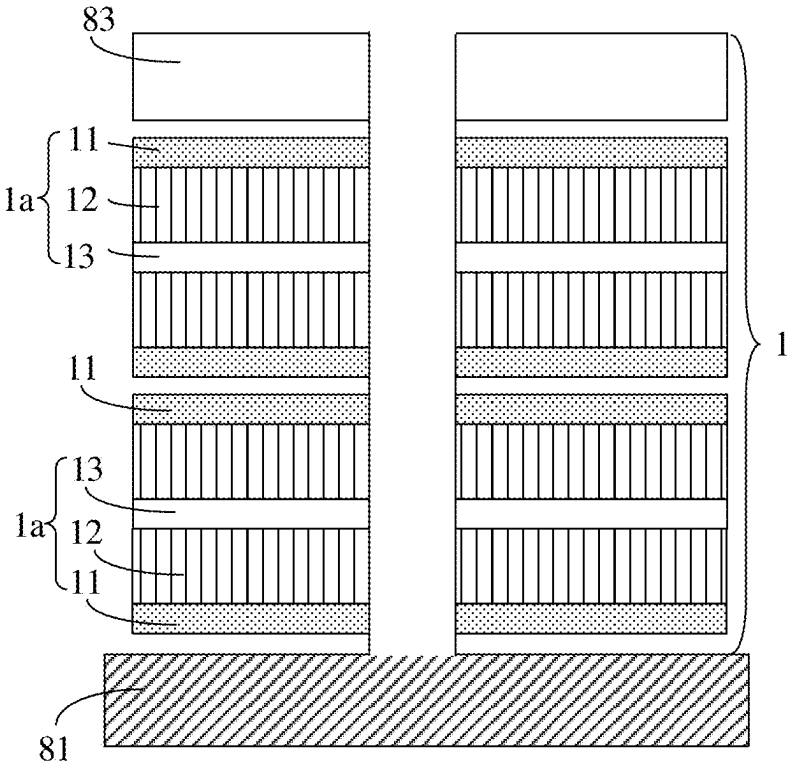
83
11
1a
12
13
11
13
1a
12
11
1
81

FIG. 54

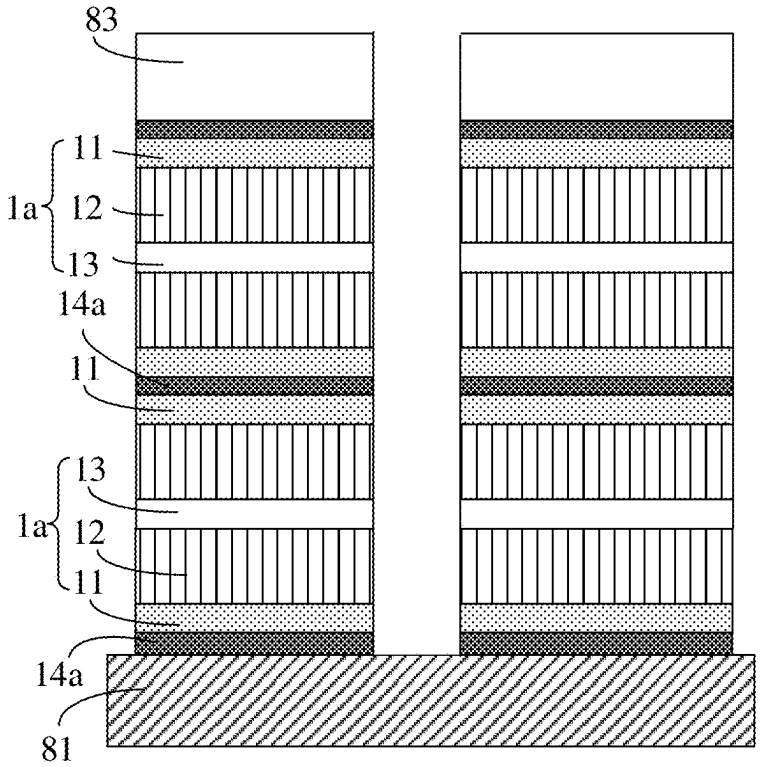
83
11
1a
12
13
14a
11
13
1a
12
11
14a
81

FIG. 55

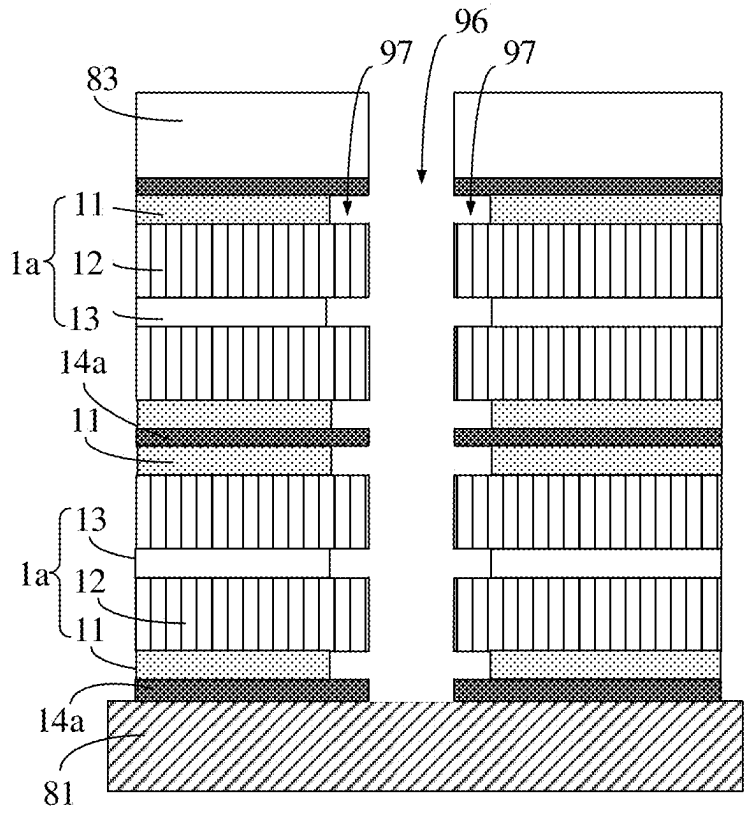
96
97
97
83
11
1a
12
13
14a
11
13
1a
12
11
14a
81

FIG. 56

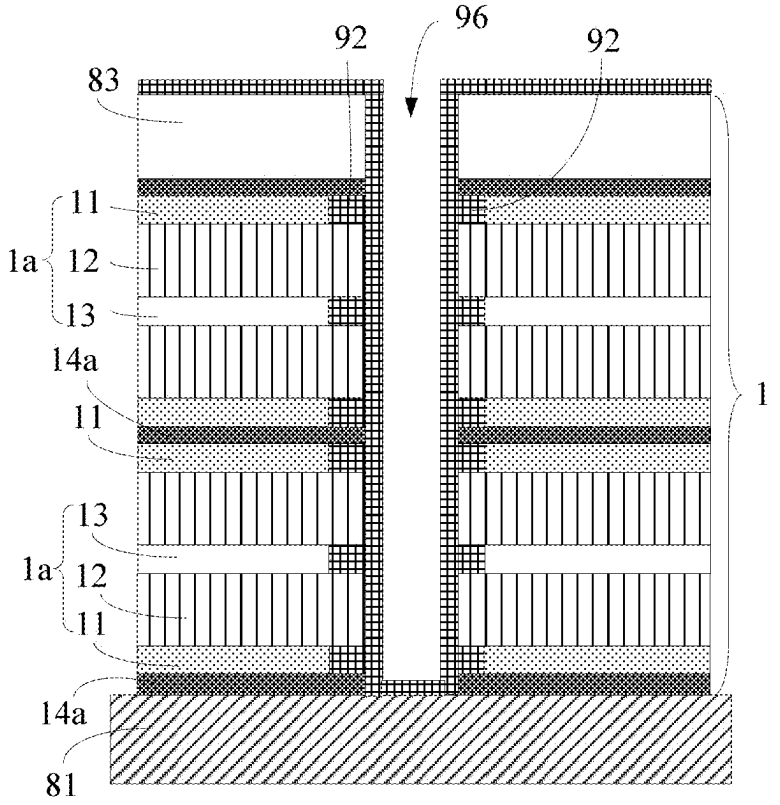
96
92
92
83
11
1a
12
13
14a
11
1
13
1a
12
11
14a
81

FIG. 57

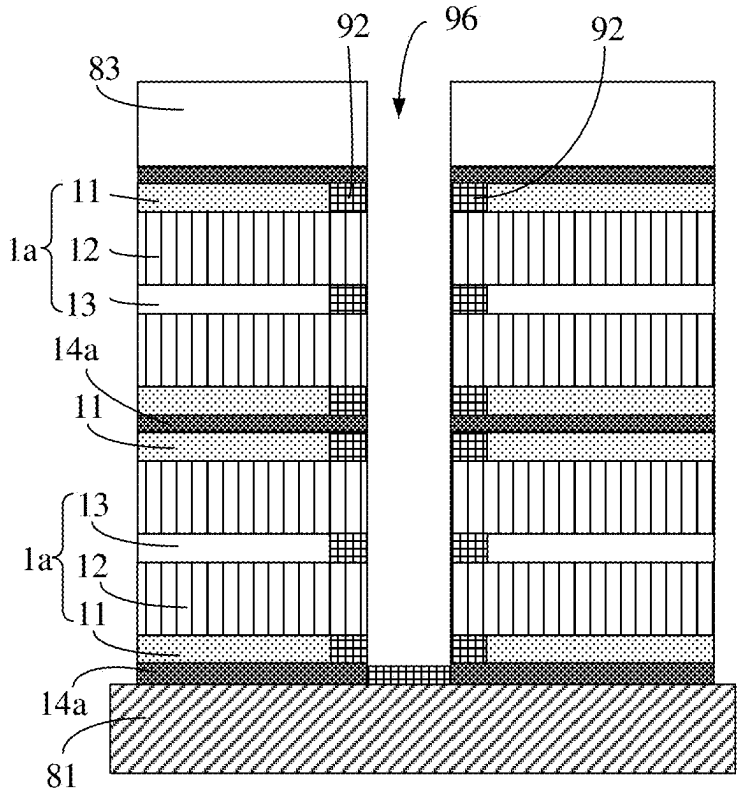
92
96
92
83
11
1a
12
13
14a
11
13
1a
12
11
14a
81

FIG. 58

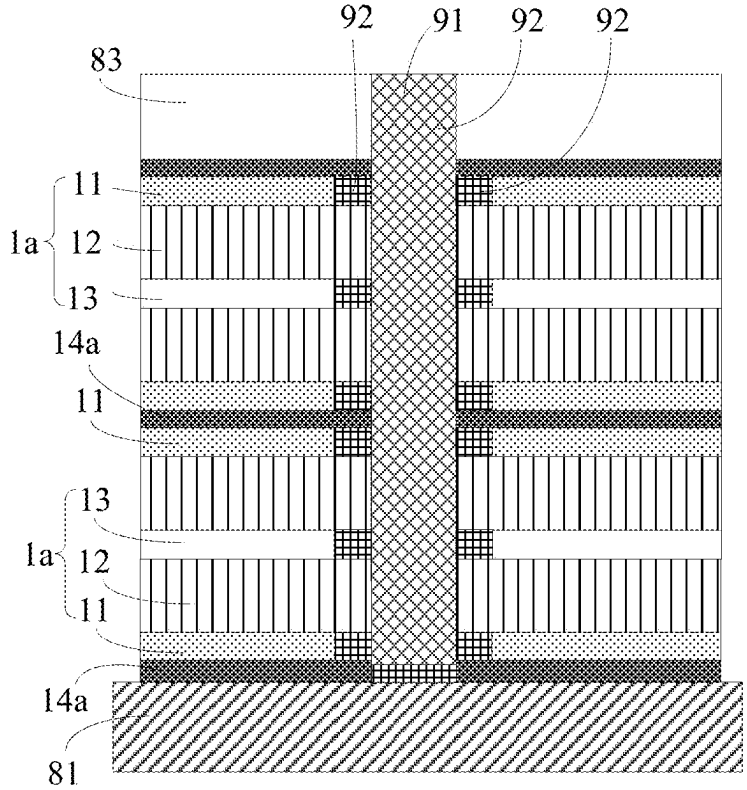
92
91
92
92
83
11
1a
12
13
14a
11
13
1a
12
11
14a
81

FIG. 59

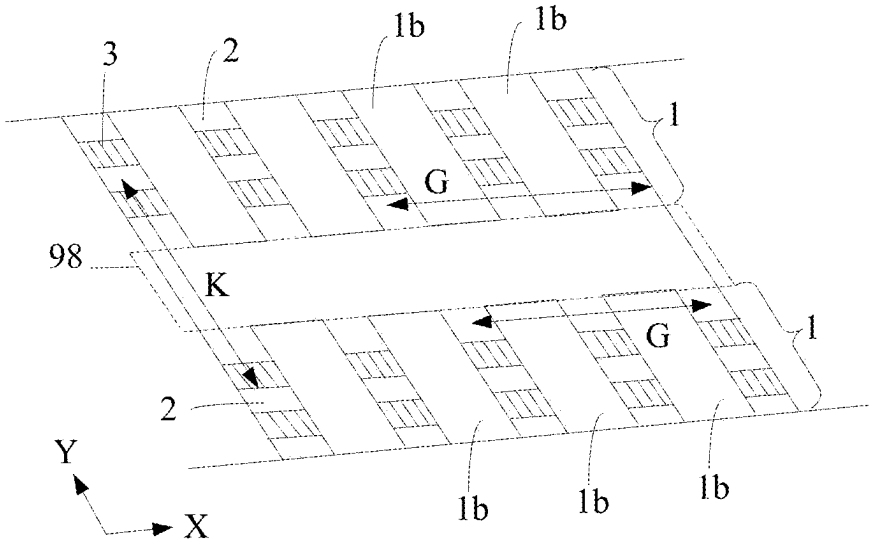
3
2
1b
1b
1
G
98
K
G
1
2
Y
X
1b
1b
1b

FIG. 60

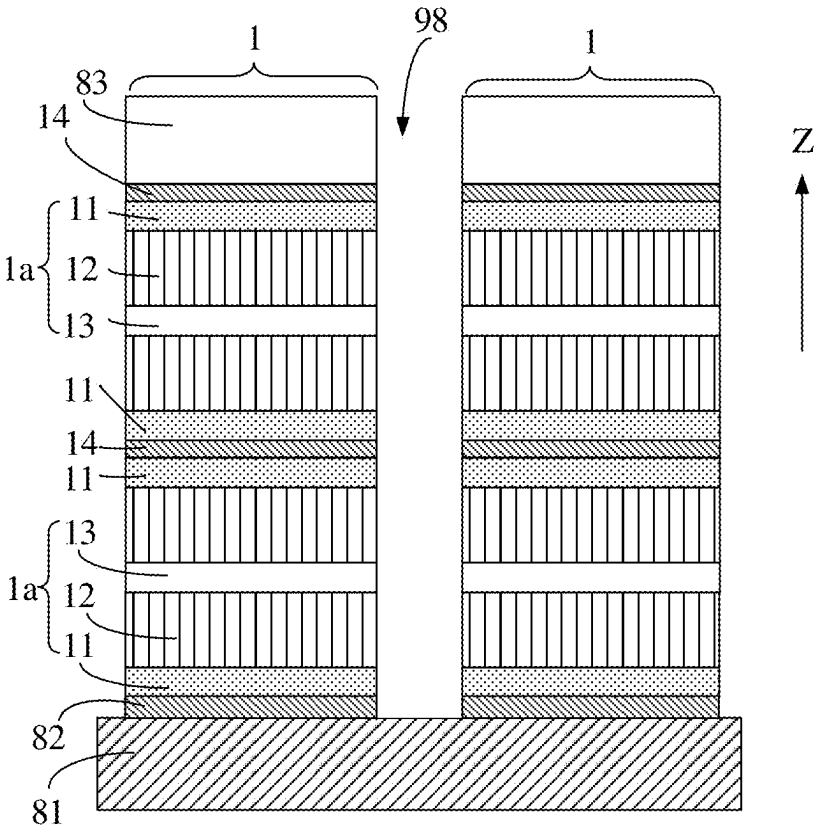
1
98
1
83
14
Z
11
1a
12
13
11
14
11
13
1a
12
11
82
81

FIG. 61

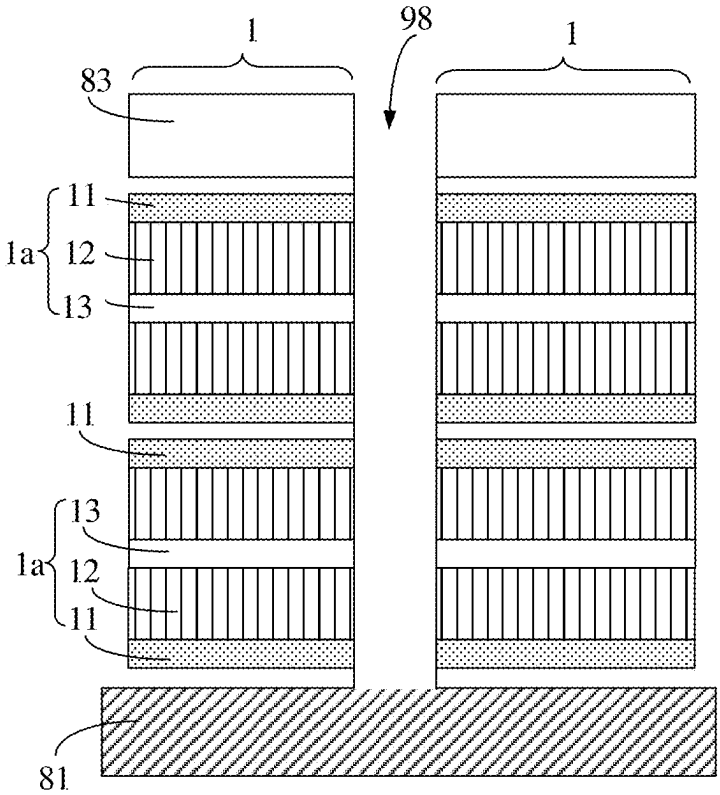
1
98
1
83
11
1a
12
13
11
13
1a
12
11
81

FIG. 62

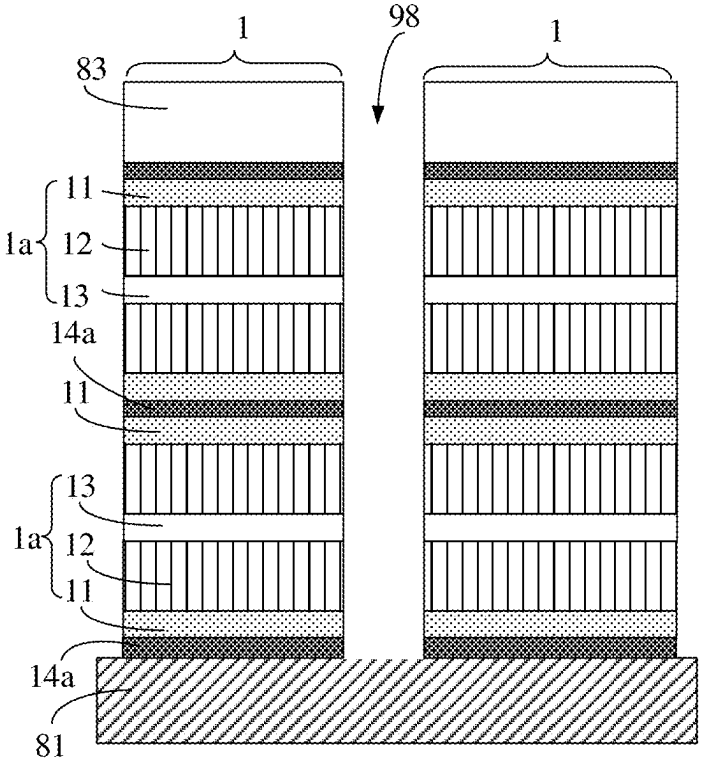
1
98
1
83
11
1a
12
13
14a
11
13
1a
12
11
14a
81

FIG. 63

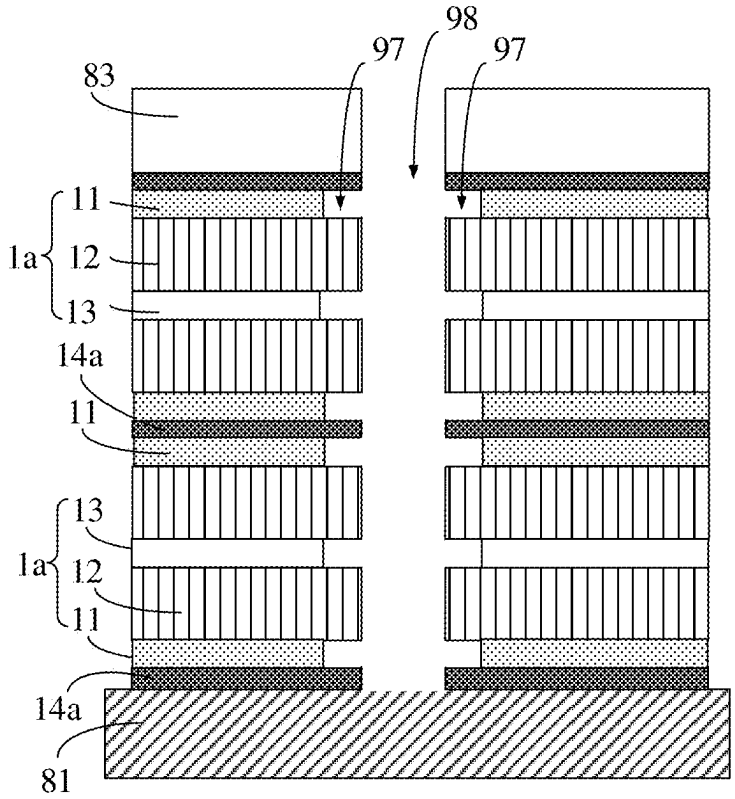
98
97
97
83
11
1a
12
13
14a
11
13
1a
12
11
14a
81

FIG. 64

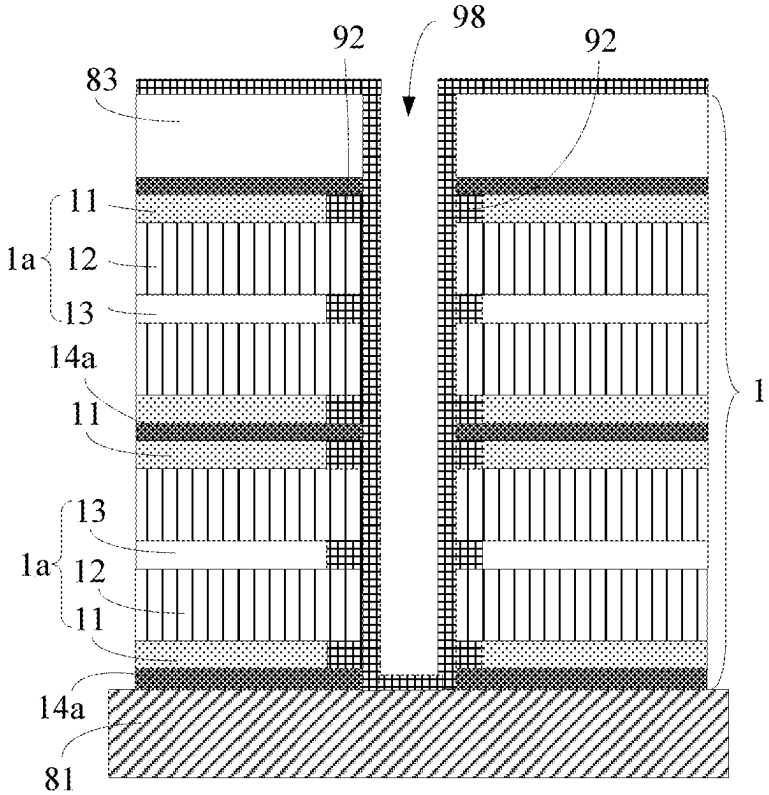
98
92
92
83
11
1a
12
13
14a
11
1
13
1a
12
11
14a
81

FIG. 65

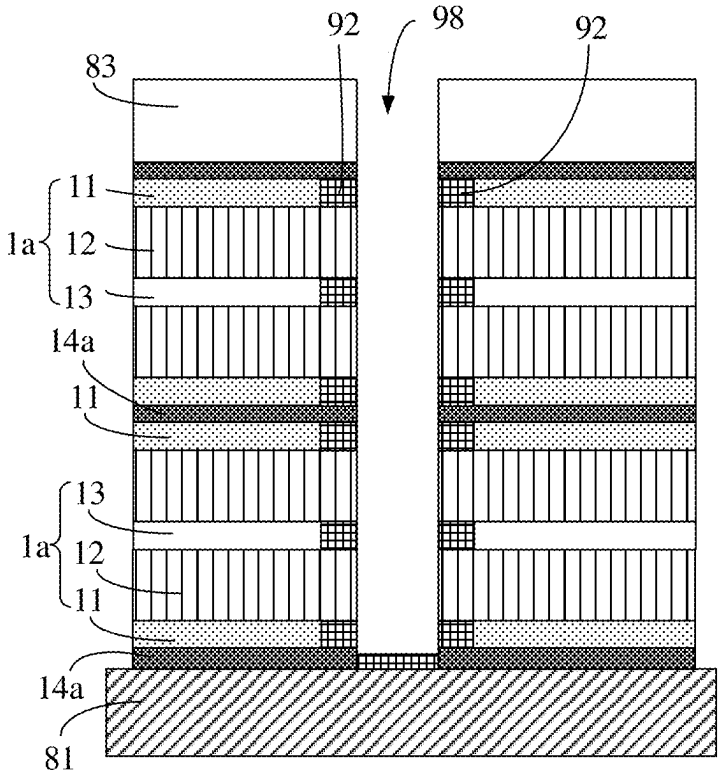
92
98
92
83
11
1a
12
13
14a
11
13
1a
12
11
14a
81

FIG. 66

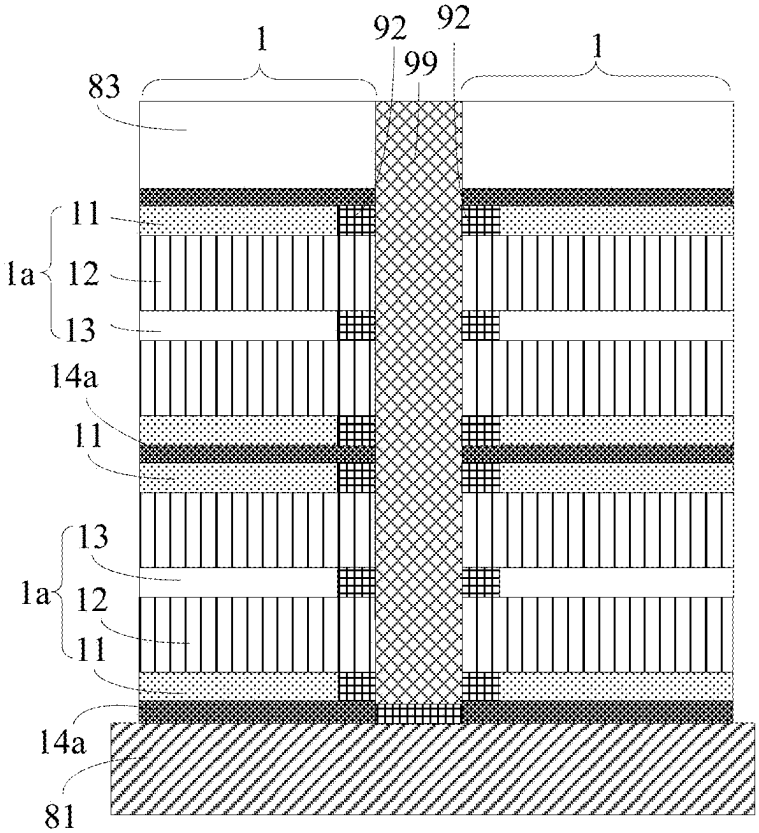
1
92
92
99
1
83
11
1a
12
13
14a
11
13
1a
12
11
14a
81

FIG. 67

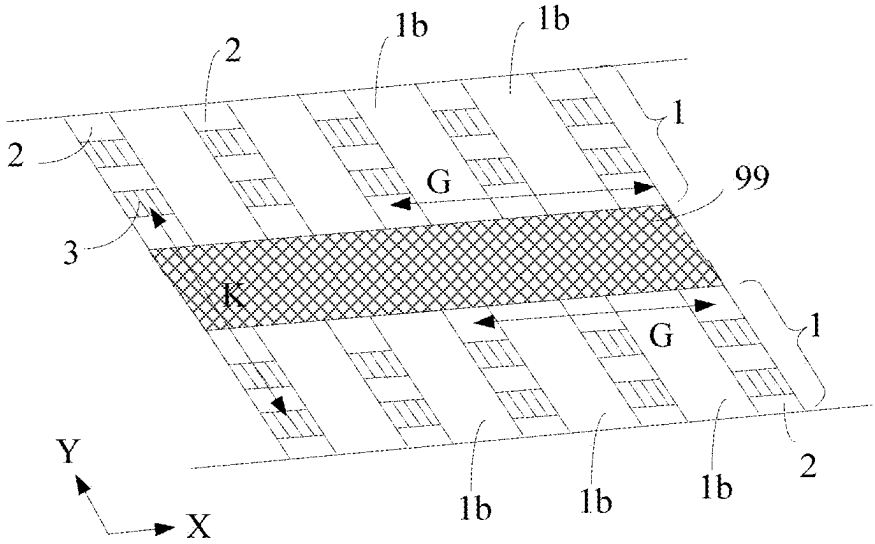

FIG. 68

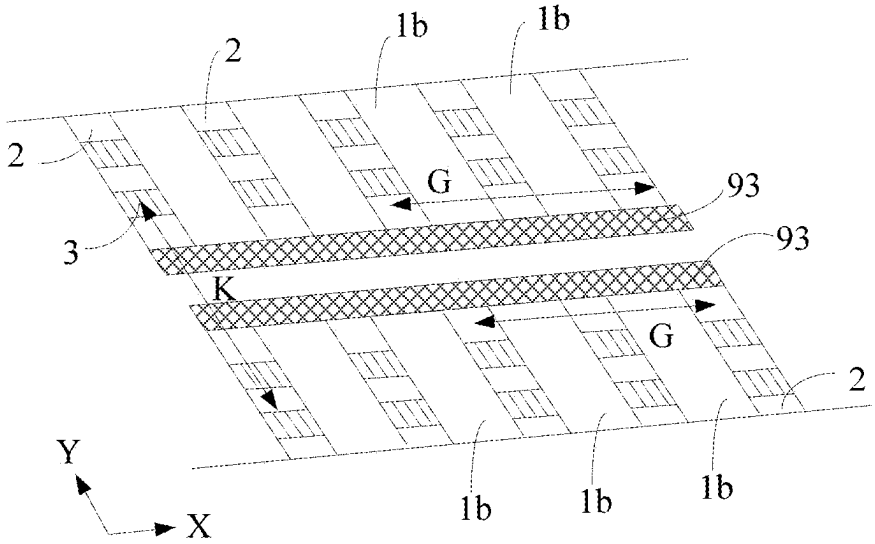

FIG. 69

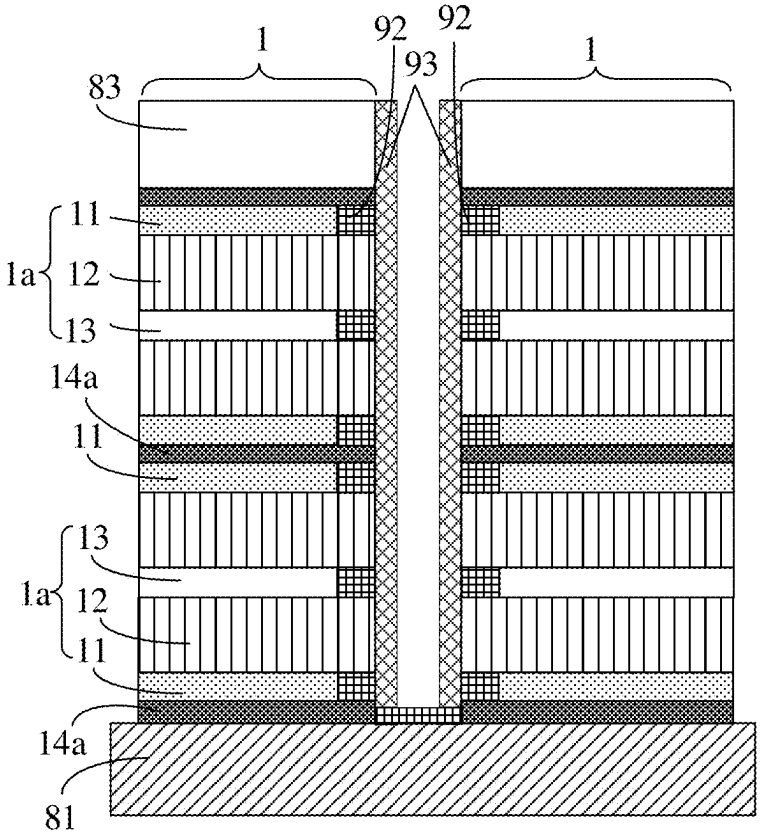
1
92
92
93
1
83
11
1a
12
13
14a
11
13
1a
12
11
14a
81

FIG. 70

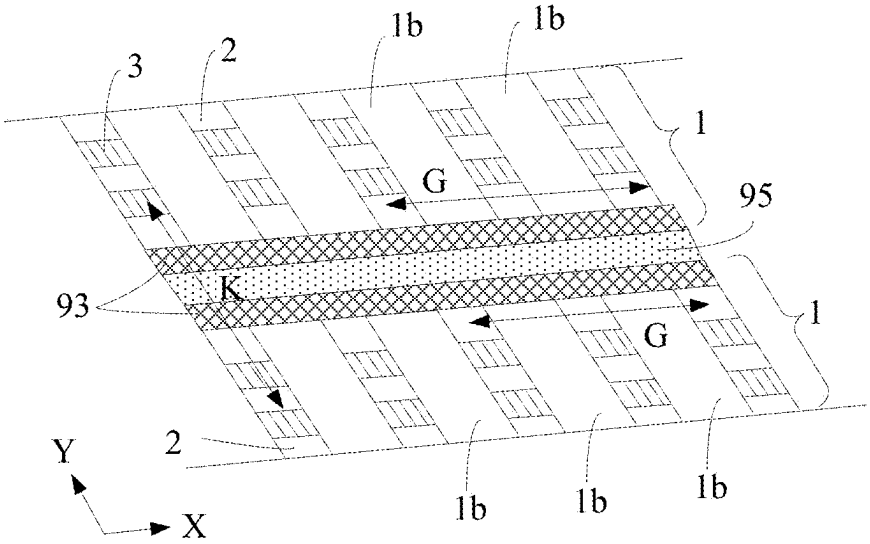
1b
1b
3
2
1
G
95
93
K
1
G
2
Y
X
1b
1b
1b

FIG. 71

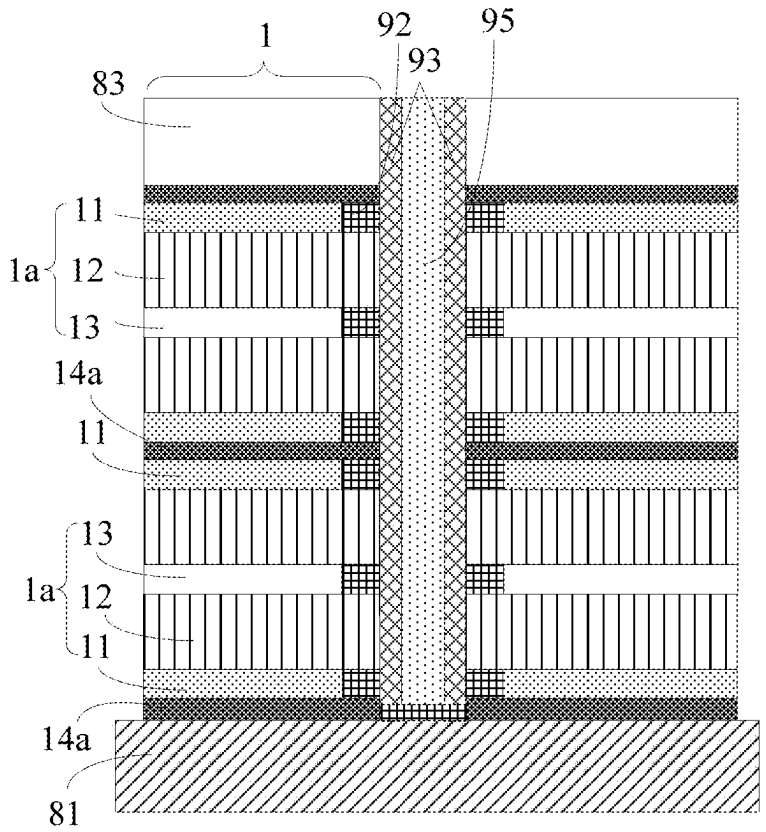
1
92
95
93
83
11
1a
12
13
14a
11
13
1a
12
11
14a
81

FIG. 72

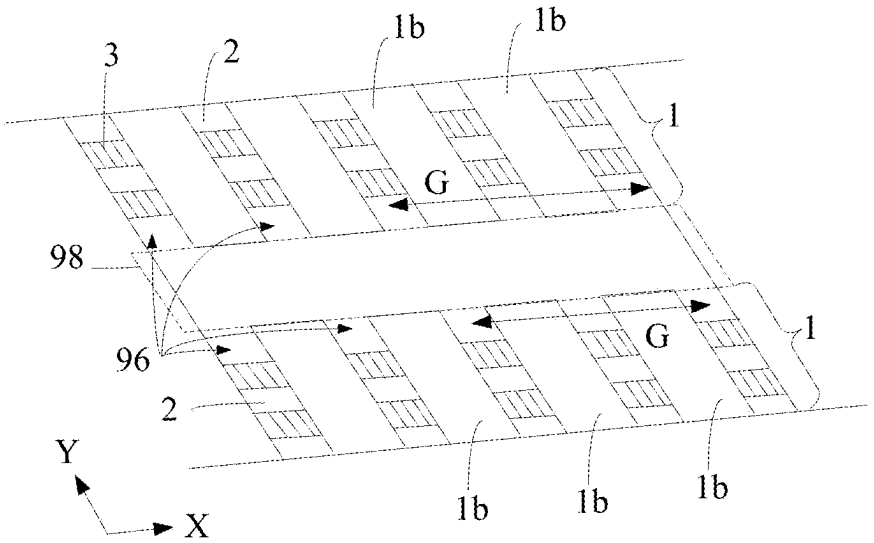
3
2
1b
1b
1
G
98
96
G
1
2
Y
X
1b
1b
1b

FIG. 73

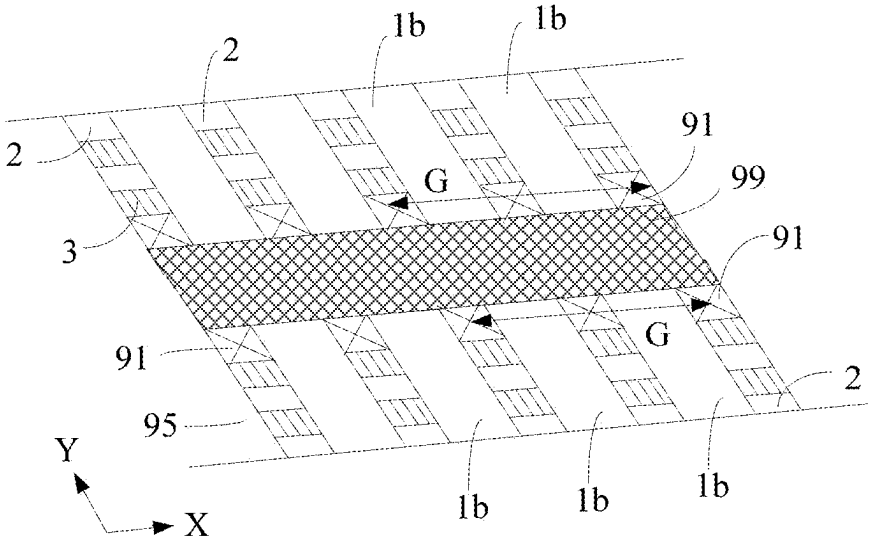
1b
1b
2
2
91
G
99
3
91
G
91
2
95
Y
X
1b
1b
1b

FIG. 74

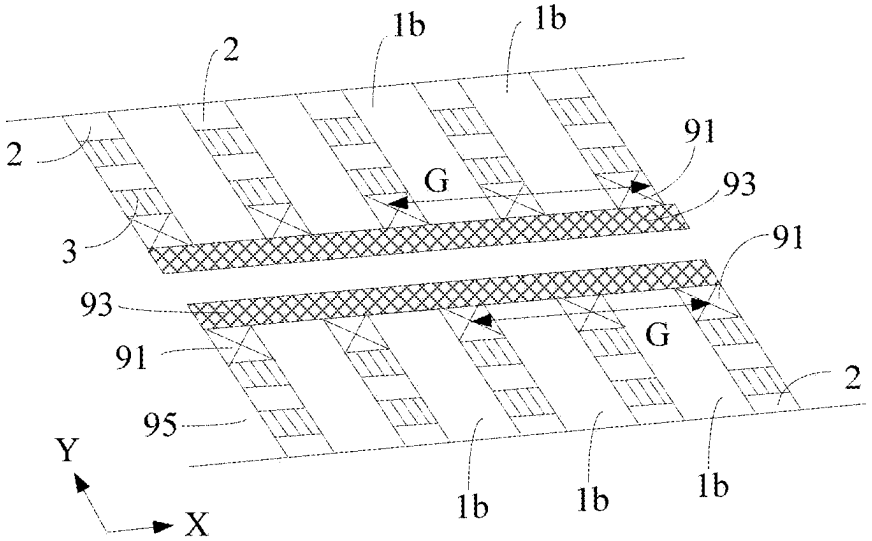
1b
1b
2
2
91
G
93
3
91
93
G
91
2
95
Y
X
1b
1b
1b

FIG. 75

MEMORY DEVICE AND MANUFACTURING METHOD THEREOF

CROSS REFERENCE TO RELATED APPLICATIONS

[0001] The present disclosure is a continuation of International Patent Application No. PCT/CN2023/124594, filed on Oct. 13, 2023, which claims priority to Chinese patent application No. 202211643910.2, filed on Dec. 20, 2022, the entire contents of these applications are incorporated herein by reference.

TECHNICAL FIELD

[0002] The present disclosure relates to the field of semiconductor technologies, and in particular to a memory device and a manufacturing method thereof.

BACKGROUND

[0003] Two-dimensional (2D) memory devices are prevalent in electronic devices and may include, for example, NOR-flash memory arrays, NAND-flash memory arrays, dynamic random-access memory (DRAM) arrays, etc. However, 2D memory arrays are approaching scaling limits and the storage density cannot be further increased. Channel connection posts, which are respectively configured to lead out each channel portion from a plurality of stacked memory cells for storage, occupy a relatively large area on surfaces of the memory arrays, leading to a relatively high degree of difficulty and a relatively high cost in a manufacturing process.

SUMMARY

[0004] To solve the above technical problems, a solution adopted by the present disclosure is to provide a memory device. The memory device includes: a substrate; at least one memory array arranged on the substrate. Each memory array includes a plurality of memory subarray layers sequentially stacked along a height direction, and each memory subarray layer includes a drain region semiconductor layer, a channel semiconductor layer, and a source region semiconductor layer stacked along the height direction. In each memory subarray layer, the drain region semiconductor layer includes a plurality of drain region semiconductor strips spaced apart along a row direction, each drain region semiconductor strip extending along the row direction; the channel semiconductor layer includes a plurality of channel semiconductor strips spaced apart along the row direction, each channel semiconductor strip extending along a column direction; the source region semiconductor layer includes a plurality of source region semiconductor strips spaced apart along the row direction, each source region semiconductor strip extending along the column direction. A column of drain region semiconductor strips, channel semiconductor strips, and source region semiconductor strips in the memory subarray layers is defined as a column of semiconductor strip structures. Each memory array further includes a channel connection structure, the channel connection structure extends along the height direction, and the channel connection structure is in contact with each channel semiconductor strip in each column of semiconductor strip structures, and is insulated from each drain region semiconductor strip and each source region semiconductor strip in each column of semiconductor strip structures.

[0005] To solve the above technical problems, another solution adopted by the present disclosure is to provide a manufacturing method of a memory device. The method includes: providing a semiconductor substrate, the semiconductor substrate including a substrate and a plurality of memory subarray layers arranged on the substrate and sequentially stacked in a height direction, and each memory subarray layer including a drain region semiconductor layer, a channel semiconductor layer, and a source region semiconductor layer stacked along the height direction; in each memory subarray layer, the drain region semiconductor layer includes a plurality of drain region semiconductor strips spaced apart along a row direction, each drain region semiconductor strip extending along the row direction; the channel semiconductor layer includes a plurality of channel semiconductor strips spaced apart along the row direction, each channel semiconductor strip extending along a column direction; the source region semiconductor layer includes a plurality of source region semiconductor strips spaced apart along the row direction, each source region semiconductor strip extending along the column direction; a column of drain region semiconductor strips, channel semiconductor strips, and source region semiconductor strips in the memory subarray layers being defined as a column of semiconductor strip structures; defining a connection hole on the semiconductor substrate; forming a channel connection structure through the connection hole, the channel connection structure extending along the height direction, and the channel connection structure being in contact with each channel semiconductor strip in each column of semiconductor strip structures, and being insulated from each drain region semiconductor strip and each source region semiconductor strip in each column of semiconductor strip structures.

BRIEF DESCRIPTION OF THE DRAWINGS

[0006] In order to more clearly illustrate the technical solutions in the embodiments of the present disclosure or in the related art, a brief introduction will be provided below for the drawings required in the embodiments. It is apparent that the drawings described herein are merely some embodiments of the present disclosure. For those skilled in the art, other drawings may also be obtained according to the drawings without inventive effort.

[0007] FIG. **1** is a perspective structural schematic view of a memory array according to an embodiment of the present disclosure.

[0008] FIG. **2** is another perspective structural schematic view of a memory array according to an embodiment of the present disclosure.

[0009] FIG. **3** is further another perspective structural schematic view of a memory array according to an embodiment of the present disclosure.

[0010] FIG. **4** is further another perspective structural schematic view of a memory array according to an embodiment of the present disclosure.

[0011] FIG. **5** is a perspective structural schematic view of a memory cell according to an embodiment of the present disclosure.

[0012] FIG. **6** is a perspective schematic view of a structure in which of two memory cells share the same column of drain region semiconductor strip, channel semiconductor strip, and source region semiconductor strip.

[0013] FIG. **7** is a perspective structural schematic view of a memory cell according to another embodiment of the present disclosure.

[0014] FIG. **8** is a perspective structural schematic view of a memory cell according to further another embodiment of the present disclosure.

[0015] FIG. **9** is a perspective schematic view of a partial structure of a memory device according to another embodiment of the present disclosure.

[0016] FIG. **10** is a perspective structural schematic view of a memory cell according to further another embodiment of the present disclosure.

[0017] FIG. **11** is a perspective structural schematic view of a memory device according to further another embodiment of the present disclosure.

[0018] FIG. **12** is a structural schematic view of a circuit connection of part of memory cells of a memory device according to an embodiment of the present disclosure.

[0019] FIG. **13** is a schematic view of a circuitry of the memory device shown in FIG. **11**.

[0020] FIG. **14** is a schematic sketch of a plan view of the memory device shown in FIG. **11**.

[0021] FIG. **15** is a schematic view of a memory cell corresponding to each layer of bit lines.

[0022] FIG. **16** is a schematic view of a three-dimensional distribution of word-lines and bit lines.

[0023] FIG. **17** is a flowchart of a manufacturing method of a memory device according to an embodiment of the present disclosure.

[0024] FIG. **18** is a schematic view of structure at a specific operation of a manufacturing method of a memory block according to an embodiment of the present disclosure.

[0025] FIG. **19** is a schematic view of structure at another specific operation of a manufacturing method of a memory block according to an embodiment of the present disclosure.

[0026] FIG. **20** is a schematic view of structure at further another specific operation of a manufacturing method of a memory block according to an embodiment of the present disclosure.

[0027] FIG. **21** is a schematic view of structure at further another specific operation of a manufacturing method of a memory block according to an embodiment of the present disclosure.

[0028] FIG. **22** is a schematic view of structure at further another specific operation of a manufacturing method of a memory block according to an embodiment of the present disclosure.

[0029] FIG. **23** is a schematic view of structure at further another specific operation of a manufacturing method of a memory block according to an embodiment of the present disclosure.

[0030] FIG. **24***a* is a schematic view of structure at further another specific operation of a manufacturing method of a memory block according to an embodiment of the present disclosure.

[0031] FIG. **24***b* is a schematic view of structure at further another specific operation of a manufacturing method of a memory block according to an embodiment of the present disclosure.

[0032] FIG. **25***a* is a schematic view of structure at further another specific operation of a manufacturing method of a memory block according to an embodiment of the present disclosure.

[0033] FIG. **25***b* is a schematic view of structure at further another specific operation of a manufacturing method of a memory block according to an embodiment of the present disclosure.

[0034] FIG. **26** is a schematic view of structure at further another specific operation of a manufacturing method of a memory block according to an embodiment of the present disclosure.

[0035] FIG. **27** is a schematic view of structure at further another specific operation of a manufacturing method of a memory device according to an embodiment of the present disclosure.

[0036] FIG. **28** is a flowchart of a manufacturing method of a memory device according to another embodiment of the present disclosure.

[0037] FIG. **29** is a schematic view of structure at a specific operation of a manufacturing method of a memory block according to another embodiment of the present disclosure.

[0038] FIG. **30** is a schematic view of structure at another specific operation of a manufacturing method of a memory block according to another embodiment of the present disclosure.

[0039] FIG. **31** is a schematic view of structure at further another specific operation of a manufacturing method of a memory block according to another embodiment of the present disclosure.

[0040] FIG. **32** is a schematic view of structure at further another specific operation of a manufacturing method of a memory block according to another embodiment of the present disclosure.

[0041] FIG. **33** is a schematic view of structure at further another specific operation of a manufacturing method of a memory block according to another embodiment of the present disclosure.

[0042] FIG. **34** is a schematic view of structure at further another specific operation of a manufacturing method of a memory block according to another embodiment of the present disclosure.

[0043] FIG. **35** is a schematic view of structure at further another specific operation of a manufacturing method of a memory block according to another embodiment of the present disclosure.

[0044] FIG. **36***a* is a schematic view of structure at further another specific operation of a manufacturing method of a memory block according to another embodiment of the present disclosure.

[0045] FIG. **36***b* is a schematic view of structure at further another specific operation of a manufacturing method of a memory block according to another embodiment of the present disclosure.

[0046] FIG. **37** is a schematic view of structure at further another specific operation of a manufacturing method of a memory block according to another embodiment of the present disclosure.

[0047] FIG. **38** is a schematic view of structure at further another specific operation of a manufacturing method of a memory block according to another embodiment of the present disclosure.

[0048] FIG. **39***a* is a schematic view of structure at further another specific operation of a manufacturing method of a memory block according to another embodiment of the present disclosure.

[0049] FIG. **39***b* is a schematic view of structure at further another specific operation of a manufacturing method of a memory block according to another embodiment of the present disclosure.

[0050] FIG. **40** is a schematic view of structure at further another specific operation of a manufacturing method of a memory block according to another embodiment of the present disclosure.

[0051] FIG. **41** is a schematic view of structure at further another specific operation of a manufacturing method of a memory block according to another embodiment of the present disclosure.

[0052] FIG. **42** is a schematic view of structures at further another specific operation of a manufacturing method of a memory device according to another embodiment of the present disclosure.

[0053] FIG. **43***a* is a perspective structural schematic view of a memory array according to another embodiment of the present disclosure.

[0054] FIG. **43***b* is a schematic sketch of a plan view of a memory device corresponding to the memory array shown in FIG. **43***a*.

[0055] FIG. **44***a* is a distribution schematic view of channel connection posts according to an embodiment of the present disclosure.

[0056] FIG. **44***b* is another distribution schematic view of channel connection posts according to an embodiment of the present disclosure.

[0057] FIG. **45** is a cross-sectional view along G-direction of a product corresponding to FIG. **43***b*.

[0058] FIG. **46***a* is a perspective structural schematic view of a memory array according to another embodiment of the present disclosure.

[0059] FIG. **46***b* is another perspective structural schematic view of a memory array according to another embodiment of the present disclosure.

[0060] FIG. **47** is a schematic sketch of a plan view of a memory device corresponding to the memory array shown in FIG. **46***b*.

[0061] FIG. **48** is a partial top view of a memory device according to an embodiment of the present disclosure.

[0062] FIG. **49** is a flowchart of a manufacturing method of a memory device according to further another embodiment of the present disclosure.

[0063] FIG. **50** is a schematic view of structures at a specific operation of a manufacturing method of a memory device according to further another embodiment of the present disclosure.

[0064] FIG. **51** is a schematic view of structure at another specific operation of a manufacturing method of a memory block according to further another embodiment of the present disclosure.

[0065] FIG. **52** is a schematic view of structure at further another specific operation of a manufacturing method of a memory block according to further another embodiment of the present disclosure.

[0066] FIG. **53** is a schematic view of structure at further another specific operation of a manufacturing method of a memory block according to further another embodiment of the present disclosure.

[0067] FIG. **54** is a schematic view of structure at further another specific operation of a manufacturing method of a memory block according to further another embodiment of the present disclosure.

[0068] FIG. **55** is a schematic view of structure at further another specific operation of a manufacturing method of a memory block according to further another embodiment of the present disclosure.

[0069] FIG. **56** is a schematic view of structure at further another specific operation of a manufacturing method of a memory block according to further another embodiment of the present disclosure.

[0070] FIG. **57** is a schematic view of structure at further another specific operation of a manufacturing method of a memory block according to further another embodiment of the present disclosure.

[0071] FIG. **58** is a schematic view of structure at further another specific operation of a manufacturing method of a memory block according to further another embodiment of the present disclosure.

[0072] FIG. **59** is a schematic view of structure at further another specific operation of a manufacturing method of a memory block according to further another embodiment of the present disclosure.

[0073] FIG. **60** is a schematic view of structures at further another specific operation of a manufacturing method of a memory device according to further another embodiment of the present disclosure.

[0074] FIG. **61** is a schematic view of structure at further another specific operation of a manufacturing method of a memory block according to further another embodiment of the present disclosure.

[0075] FIG. **62** is a schematic view of structure at further another specific operation of a manufacturing method of a memory block according to further another embodiment of the present disclosure.

[0076] FIG. **63** is a schematic view of structure at further another specific operation of a manufacturing method of a memory block according to further another embodiment of the present disclosure.

[0077] FIG. **64** is a schematic view of structure at further another specific operation of a manufacturing method of a memory block according to further another embodiment of the present disclosure.

[0078] FIG. **65** is a schematic view of structure at further another specific operation of a manufacturing method of a memory block according to further another embodiment of the present disclosure.

[0079] FIG. **66** is a schematic view of structure at further another specific operation of a manufacturing method of a memory block according to further another embodiment of the present disclosure.

[0080] FIG. **67** is a schematic view of structure at further another specific operation of a manufacturing method of a memory block according to further another embodiment of the present disclosure.

[0081] FIG. **68** is a schematic view of structure at further another specific operation of a manufacturing method of a memory block according to further another embodiment of the present disclosure.

[0082] FIG. **69** is a schematic view of structure at further another specific operation of a manufacturing method of a memory block according to further another embodiment of the present disclosure.

[0083] FIG. **70** is a schematic view of structures at further another specific operation of a manufacturing method of a memory device according to further another embodiment of the present disclosure.

[0084] FIG. **71** is a schematic view of structure at further another specific operation of a manufacturing method of a memory block according to further another embodiment of the present disclosure.

[0085] FIG. **72** is a schematic view of structure at further another specific operation of a manufacturing method of a memory block according to further another embodiment of the present disclosure.

[0086] FIG. **73** is a schematic view of structure at further another specific operation of a manufacturing method of a memory block according to further another embodiment of the present disclosure.

[0087] FIG. **74** is a schematic view of structure at further another specific operation of a manufacturing method of a memory block according to further another embodiment of the present disclosure.

[0088] FIG. **75** is a schematic view of structure at further another specific operation of a manufacturing method of a memory device according to further another embodiment of the present disclosure.

Reference Numerals

[0089] memory array **1**; memory subarray layer **1***a*; drain region semiconductor strip **11**; bit line connection line **11***a*; channel semiconductor strip **12**; well region connection line **12***a*; common well region line **12***b*; common well region lead line **12***d*; source region semiconductor strip **13**; source connection line **13***a*; common source line **13***b*; common source lead line **13***d*; interlayer isolation strip **14***a*; second single-crystal sacrificial semiconductor layer **14**; insulating isolation layer **14'**; body structure **15***a*; protrusion **15***b*; support post **16**; column of semiconductor strip structures **1***b*; gate strip **2**; isolation wall **3**; isolation wall hole **31**; word-line hole **4**; storage structure **5**; first dielectric layer **51**; charge storage layer **52**; second dielectric layer **53**; floating gate **54**; first insulating dielectric layer **56**; odd word-line **8***a*; even word-line **8***b*; word-line connection line **7**; drain region portion **11'**; channel portion **12'**; source region portion **13'**; gate portion **2'**; storage structure portion **5'**; substrate **81**; first single-crystal sacrificial semiconductor layer **82**; first hard mask layer **83**; word-line opening **831**; first recess **84**; second recess **84'**; third recess **84***a*; first insulating dielectric **85**; first insulating dielectric layer **85***a*; second insulating dielectric layer **85***b*; second insulating dielectric **86**; drain region semiconductor layer **11***c*; channel semiconductor layer **12***c*; source region semiconductor layer **13***c*; channel connection post **91**; first insulating material **92**; channel connection wall **93**; connection layer **94**; second insulating material **95**; first-type connection hole **96**; isolation recess **97**; second-type connection hole **98**; first conductive medium **99**.

DETAILED DESCRIPTION

[0090] The technical solutions in embodiments of the present disclosure will be clearly and completely described below in conjunction with the accompanying drawings in the embodiments of the present disclosure, and it is obvious that the described embodiments are only a part of the embodiments of the present disclosure, but not all of them. Based on the embodiments of the present disclosure, all other embodiments obtained by those skilled in the art without creative labor fall within the protection scope of the present disclosure.

[0091] The terms "first", "second", and "third" in the present disclosure are intended for descriptive purposes only and are not to be construed as indicating or implying relative importance or implicitly indicating the number of indicated technical features. Therefore, a feature defined with "first", "second", or "third" may explicitly or implicitly include at least one such feature. In the description of the present disclosure, the terms "a plurality of" or "multiple" means at least two, e.g., two, three, etc., unless otherwise expressly and specifically limited. All directional indications (e.g., up, down, left, right, forward, backward . . .) in the present disclosure are intended only to explain relative position relationships, movements, etc., between components in a particular posture (as shown in the accompanying drawings). If the particular posture is changed, the directional indications are changed accordingly. In addition, the terms "include" and "have", and any variations thereof are intended to cover non-exclusive inclusion. For example, a process, method, system, product, or device including a series of steps or units is not limited to the listed steps or units, but optionally further includes steps or units not listed, or optionally further includes other steps or units inherent to the process, method, product, or device.

[0092] References herein to the term "embodiment" mean that particular features, structures, or characteristics described in conjunction with an embodiment may be included in at least one embodiment of the present disclosure. The presence of the phrase at various positions in the specification does not necessarily mean the same embodiment, nor is it a separate or alternative embodiment that is mutually exclusive with other embodiments. It is understood, both explicitly and implicitly, by those skilled in the art that the embodiments described herein may be combined with other embodiments.

[0093] The present disclosure is described in detail below in conjunction with the accompanying drawings and embodiments.

[0094] Embodiments of the present disclosure provide a memory device, and the memory device may specifically be a non-volatile memory device. As shown in FIG. **1** to FIG. **3**, FIG. **1** to FIG. **3** are perspective structural schematic views of a memory array according to an embodiment of the present disclosure. The memory device may include substrate **81** and one or more memory arrays **1** arranged on the substrate **81**. The memory array **1** includes a structure in which multiple memory cells are arranged in a three-dimensional array; and the memory device may include, in addition to the memory array **1** formed by the multiple memory cell arrays, other components, such as various types of wires (or connection lines), etc., enabling the memory device to implement various memory operations.

[0095] An example is given with a number of the memory arrays **1** being one. The memory array **1** includes multiple memory cells distributed in a three-dimensional array. As shown in FIG. **1**, the memory array **1** includes multiple memory subarray layers **1***a* stacked sequentially along a height direction Z. Each memory subarray layer **1***a* includes a drain region semiconductor layer, a channel semiconductor layer, and a source region semiconductor layer stacked along the height direction Z. The drain region semiconductor layer, the channel semiconductor layer, and the source region

semiconductor layer may each be a single-crystal semiconductor layer grown by epitaxy. The height direction Z is a direction perpendicular to the substrate **81**. The sequential stacking indicates a sequential arrangement on the substrate from bottom to top, and the stacking represents an arrangement and does not express or imply a structure or a top-to-bottom relationship of the layers.

[0096] In each memory subarray layer **1***a*, the drain region semiconductor layer (D) includes multiple drain region semiconductor strips **11** spaced along a row direction X, each drain region semiconductor strip **11** extending along a column direction Y. The channel semiconductor layer (CH) includes multiple channel semiconductor strips **12** spaced along the row direction X, each channel semiconductor strip **12** extending along the column direction Y. The source region semiconductor layer (S) includes multiple source region semiconductor strips **13** spaced along the row direction X, each source region semiconductor strip **13** extending along the column direction Y. Each drain region semiconductor strip **11**, channel semiconductor strip **12**, and source region semiconductor strip **13** is a single-crystal semiconductor strip, respectively. It is understood by those skilled in the art that each drain region semiconductor strip **11**, channel semiconductor strip **12**, and source region semiconductor strip **13** may be a single-crystal semiconductor strip formed by processing the drain region semiconductor layer, channel semiconductor layer, and source region semiconductor layer formed by epitaxy generation, respectively. As shown in FIG. **1** to FIG. **3**, multiple gate strips **2** (G) are arranged on each side of each column of drain region semiconductor strips **11**, channel semiconductor strips **12**, and source region semiconductor strips **13**, respectively. The multiple gate strips **2** distributed on a side of each column of drain region semiconductor strips **11**, channel semiconductor strips **12**, and source region semiconductor strips **13** are spaced along the column direction Y, and each gate strip **2** extends along the height direction Z. In this way, corresponding parts of the multiple drain region semiconductor strips **11**, channel semiconductor strips **12**, and source region semiconductor strips **13** in the same column in the multiple memory subarray layers la share the same gate strip **2**.

[0097] As shown in FIG. **2**, among the multiple gate strips **2**, each gate strip **2** in the same column and a corresponding gate strip **2** are staggered from each other in the column direction Y, and the corresponding gate strip **2** is in a column adjacent to the column where the gate strip **2** is located and corresponds the gate strip **2** in the row direction X. For example, each gate strip **2** in a first column and each gate strip **2** in a second column are staggered from each other in the column direction Y. Of course, as shown in FIG. **1**, each gate strip **2** in the same column and the corresponding gate strip **2** may be aligned with each other in the column direction Y, and the corresponding gate strip **2** is in a column adjacent to the column where the gate strip **2** is located and corresponds to the gate strip **2** in the row direction X. The staggered arrangement may reduce the influence on an electric field between corresponding two gate strips **2** in two adjacent columns.

[0098] In the height direction Z, a projection of at least a part of each gate strip **2** coincides with a projection of a part of a corresponding channel semiconductor strip **12** in each memory subarray layer la on a projection plane. The projection plane is a plane defined by the height direction Z and the column direction Y, i.e., the projection plane extends along the height direction Z and the column direction Y. As shown in FIG. **1** to FIG. **3**, for the purpose of description, it is defined that a column of drain region semiconductor strip **11**, channel semiconductor strip **12**, and source region semiconductor strip **13** in each memory subarray layer la constitutes a semiconductor strip structure; two adjacent memory subarray layers la may share a common source, i.e., the two adjacent memory subarray layers la share the same source region semiconductor layer (S). Therefore, two semiconductor strip structures corresponding to the two adjacent memory subarray layers la share the same source region semiconductor strip **13**. Of course, it is understood by those skilled in the art that the two adjacent memory subarray layers **1***a* may be arranged with a non-common source design, i.e., each memory subarray layer **1***a* has an independent source region semiconductor layer. In this way, the two semiconductor strip structures **1***b* corresponding to the two adjacent memory subarray layers **1***a* each has its own independent source region semiconductor strip **13**. In the multiple memory subarray layers **1***a*, the drain region semiconductor strips **11**, channel semiconductor strips **12**, and source region semiconductor strips **13** in the same column constitute a column of semiconductor strip structures **1***b*, i.e., a stacked structure **1***b*. The column of semiconductor strip structures **1***b* includes multiple semiconductor strip structures, and the number of the semiconductor strip structures in the column of semiconductor strip structures **1***b* is the same as the number of the memory subarray layers **1***a*. As shown in FIG. **1** to FIG. **3**, each column of semiconductor strip structures **1***b* includes two semiconductor strip structures, but those skilled in the art can understand that a column of semiconductor strip structures **1***b* may include multiple stacked semiconductor strips. As shown in FIG. **4**, which is a sketch of a perspective structure of a memory array according to another embodiment of the present disclosure, where a column of semiconductor strip structures **1***b* includes three semiconductor strip structures.

[0099] In other words, it is understood by those skilled in the art that the memory array **1** includes multiple stacked structures **1***b* distributed along the row direction X, each stacked structure **1***b* extending along the column direction Y. Each stacked structure **1***b* includes drain region semiconductor strips **11**, channel semiconductor strips **12**, and source region semiconductor strips **13** stacked along the height direction. Each drain region semiconductor strip **11**, channel semiconductor strip **12**, and source region semiconductor strip **13** extends along the column direction Y. Multiple gate strips **2** spaced along the column direction Y are arranged on each of two sides of each stacked structure **1***b*, and each gate strip **2** extends along the height direction Z.

[0100] A projection of a part of each column of semiconductor strip structures **1***b* coincides with a projection of a corresponding part of a corresponding gate strip **2** on the projection plane. In particular, a projection of a part of the channel semiconductor strip **12** in each column of semiconductor strip structures **1***b* coincides with a projection of a part of a corresponding gate strip **2** on the projection plane. In this way, a part of the gate strip **2**, a corresponding part of the channel semiconductor strip **12**, a part of the drain region semiconductor strip **11** adjacent to the corresponding part of the channel semiconductor strip **12**, and a part of the source region semiconductor strip **13** adjacent to the corresponding part of the channel semiconductor strip **12**are configured to form a memory cell. For example, as shown in

FIG. **1** to FIG. **3**, for the gate strip **2** of the first column along the row direction X and the first row along the column direction Y, a projection of a part of the gate strip **2** coincides with a projection of a corresponding part of the channel semiconductor strip **12** of the first column of the drain region semiconductor strip **11**, the channel semiconductor strip **12**, and the source region semiconductor strip **13** (a column of semiconductor strip structures **1***b* with a D/CH/S structure) of the first memory subarray layer **1***a* in the height direction Z. That is, the part of the gate strip **2** of the first column and the first row, the corresponding part of the first column of the channel semiconductor strip **12** of the first memory subarray layer **1***a* in the height direction Z, and a part of the drain region semiconductor **11** and a part of the source region semiconductor **13**, that are matched with the corresponding part of the first column of the channel semiconductor strip **12** of the first memory subarray layer **1***a* in the height direction Z, are configured to form a memory cell.

[0101] It will be understood by those skilled in the art that, a channel is required to be formed in a semiconductor region between the semiconductor drain region and the semiconductor source region; and the gate is arranged on a side of the semiconductor region between the semiconductor drain region and the semiconductor source region for constituting a semiconductor device. Therefore, as shown in FIG. **1** to FIG. **3**, the part of each gate strip **2** whose projection overlaps with the projection of a channel semiconductor strip **12** in an adjacent stacked structure **1***b* on the above projection plane is configured as a gate, i.e., a control gate of the corresponding memory cell; the part of the channel semiconductor strip **12** whose projection overlaps with the projection of the gate strip **2** on the above projection plane, i.e., the corresponding part of the channel semiconductor strip **12**, is configured as the channel region (well region) for forming a channel therein; and the drain region semiconductor strip **11** and the source region semiconductor strip **13** adjacent to the channel semiconductor strip **12** each has a part arranged just above or below the corresponding part of the channel semiconductor strip **12**, i.e., the parts of the drain region semiconductor strip **11** and the source region semiconductor strip **13** exactly match the corresponding part of the channel semiconductor strip **12** as the semiconductor drain region and the semiconductor source region. Therefore, the parts of the drain region semiconductor strip **11** and the source region semiconductor strip **13**, the corresponding part of the channel semiconductor strip **12** sandwiched between the parts of the drain region semiconductor strip **11** and the source region semiconductor strip **13**,cooperating with the part of the gate strip **2** as the control gate, are configured to form a memory cell.

[0102] Therefore, as shown in FIG. **1** to FIG. **3**, the memory array **1** of the present disclosure is formed with multiple memory cells arranged in an array, and the multiple memory cells is comprised by the drain region semiconductor strips **11**, the channel semiconductor strips **12**, the source region semiconductor strips **13**, and the gate strips **2**. In particular, the memory array **1** of the present disclosure includes multiple memory subarray layers la stacked sequentially along the height direction Z. Each memory subarray layer **1***a* includes a layer of drain region semiconductor strips **11**, a layer of channel semiconductor strips **12**, a layer of source region semiconductor strips **13**, and parts of gate strips **2** matching the above layers, such that each memory subarray layer **1***a* includes a layer of array-arranged memory cells along the height direction Z, and the stacked multiple memory subarray layers la constitute multiple layers of memory cells arrayed along the height direction Z.

[0103] In the present disclosure, each drain region semiconductor strip **11** is a semiconductor strip of a first doping type, such as an N-type doped semiconductor strip. In some embodiments, each drain region semiconductor strip **11** serves as a bit line (BL) of a memory device.

[0104] Each channel semiconductor strip **12** is a semiconductor strip of a second doping type, such as a P-type doped semiconductor strip. In some embodiments, each channel semiconductor strip **12** serves as a well region of a memory cell.

[0105] Each source region semiconductor strip **13** is also a semiconductor strip of the first doping type, such as an N-type doped semiconductor strip. In some embodiments, each source region semiconductor strip **13** serves as a source line (SL) of the memory device.

[0106] Of course, it is understood by those skilled in the art that in other types of memory devices, each drain region semiconductor strip and each source region semiconductor strip may also be a P-type doped semiconductor strip, while each channel semiconductor strip **12** is an N-type doped semiconductor strip. The present disclosure does not limit thereto.

[0107] Referring further to FIG. **1** to FIG. **3**, in the height direction Z, two adjacent memory subarray layers **1***a* include a drain region semiconductor layer, a channel semiconductor layer, a source region semiconductor layer, a channel semiconductor layer, and a drain region semiconductor layer stacked in sequence to share the common source region semiconductor layer. As shown in FIG. **1** to FIG. **3**, the common source region semiconductor strip **13** is arranged between two adjacent channel semiconductor strips **12** in the height direction Z in the same column, and two drain region semiconductor strips **11** are arranged on two sides of the two adjacent channel semiconductor strips **12**. That is, in the height direction Z, the same column of semiconductor strip structures **1***b* of two adjacent memory subarray layers **1***a* includes the drain region semiconductor strip **11**, the channel semiconductor strip **12**, the source region semiconductor strip **13**, the channel semiconductor strip **12**, and the drain region semiconductor strip **11** stacked in sequence, thereby forming two column of semiconductor strip structures **1***b* which share the common source region semiconductor strip **13**. In this way, the storage density of the memory device may be further increased while reducing cost and process.

[0108] As shown in FIG. **4**, the memory array **1** includes multiple memory subarray layers **1***a* stacked sequentially along the height direction Z. Each memory subarray layer **1***a* includes a drain region semiconductor layer, a channel semiconductor layer, and a source region semiconductor layer stacked along the height direction Z.

[0109] In each memory subarray layer **1***a*, the drain region semiconductor layer, the channel semiconductor layer, and the source region semiconductor layer include multiple drain region semiconductor strips **11**, multiple channel semiconductor strips **12**, and multiple source region semiconductor strips **13**, respectively, spaced along the row direction X.

[0110] Two adjacent memory subarray layers la include a drain region semiconductor layer, a channel semiconductor layer, a source region semiconductor layer, a channel semi-

conductor layer, and a drain region semiconductor layer sequentially stacked to share the same source region semiconductor layer.

[0111] An interlayer isolation layer is arranged between every two memory subarray layers **1***a* to isolate from the other two memory subarray layers **1***a*. That is, an interlayer isolation layer is arranged between each two consecutive memory subarray layers **1***a* and another two consecutive memory subarray layers **1***a*, the another two consecutive memory subarray layers **1***a* being adjacent to the each two consecutive memory subarray layers **1***a*. For example, in the height direction Z, an interlayer isolation layer is arranged between the first/second memory subarray layers **1***a* and the third/fourth memory subarray layers **1***a*; another interlayer isolation layer is arranged between the third/fourth memory subarray layer **1***a* and the fifth/sixth memory subarray layer **1***a*, and so on. It is understood that the one interlayer isolation layer is disposed between the second memory subarray layer **1***a* and the third memory subarray layer **1***a*; and the other interlayer isolation layer is disposed between the fourth memory subarray layer **1***a* and the fifth memory subarray layer **1***a*.

[0112] Specifically, as shown in FIG. **4**, one interlayer isolation strip **14***a* is arranged between every two adjacent columns of semiconductor strip structures **1***b* in the same column of semiconductor strip structures **1***b* in the height direction Z. Similarly, an interlayer isolation strip **14***a* is arranged between every two adjacent columns of semiconductor strip structures **1***b* in another column of semiconductor strip structures **1***b*. It is understood by those skilled in the art that multiple interlayer isolation strips **14***a* in the same horizontal plane constitute an interlayer isolation layer to isolate from the semiconductor strip structures **1***b* in the other two memory subarray layers **1***a*.

[0113] In other words, in the present disclosure, each stacked structure **1***b*' may include multiple stacked substructures, and each stacked substructure includes a drain region semiconductor strip **11**, a channel semiconductor strip **12**, a source region semiconductor strip **13**, a channel semiconductor strip **12**, and a drain region semiconductor strip **11** stacked sequentially along the height direction Z, thereby sharing the same source region semiconductor strip **13**. In the stacked structure **1***b*', an interlayer isolation strip **14***a* is arranged between two adjacent stacked substructures to isolate them from each other. That is, in two adjacent memory subarray layers **1***a*, the drain region semiconductor strip **11**, channel semiconductor strip **12**, source region semiconductor strip **13**, channel semiconductor strip **12**, and drain region semiconductor strip **11** in the same column form a stacked substructure, such that two adjacent memory subarray layers **1***a* share a common source region semiconductor strip **13**.

[0114] Referring further to FIG. **4** or FIG. **1**, multiple isolation walls **3** are distributed in the memory array **1**, and the multiple isolation walls **3** are arranged in a matrix in the row direction X and the column direction Y. As shown in FIG. **1**, multiple isolation walls **3** distributed along the column direction Y are arranged on each of two sides of each column of semiconductor strip structures **1***b*. Each isolation wall **3** extends along the height direction Z and the row direction X to separate at least parts of two adjacent columns of drain region semiconductor strips **11**, channel semiconductor strips **12**, and source region semiconductor strips **13**. That is, the multiple isolation walls **3** distributed along the column direction Y are arranged on each of the two sides of each stacked structure **1***b*' to separate at least parts of the two adjacent columns of stacked structures **1***b*'. In some embodiments, particularly during the manufacturing process of the memory device, the isolation walls **3** may further serve as support structures that may support two adjacent columns of the stacked structures **1***b*' during and/or after the manufacturing process. In addition, a part of each side of each stacked structure **1***b*' may be arranged with support posts (not shown and described in detail below), respectively, to support the two adjacent columns of the stacked structures **1***b*' during and/or after the manufacturing process of the memory array **1**.

[0115] A region between two adjacent isolation walls **3** in the same column in the column direction Y is configured to define a word-line hole **4**. That is, any two adjacent isolation walls **3** in the same column, cooperating with two columns of semiconductor strip structures **1***b* (i.e., stacked structures **1***b*') on both sides thereof, may define multiple regions for the word-line holes **4**, and these regions may be processed such that corresponding word-line holes **4** may be defined. That is, the multiple columns of drain region semiconductor strips **11**, channel semiconductor strips **12**, and source region semiconductor strips **13** extending along the column direction Y pass through the multiple rows of isolation walls **3** extending along the row direction X, to define the multiple word-line holes **4** cooperating with the multiple isolation walls **3**. Each word-line hole **4** extends along the height direction Z.

[0116] Each word-line hole **4** is configured to fill a gate material to form a corresponding gate strip **2**. That is, a gate strip **2** is filled between two adjacent isolation walls **3** in the same column direction Y.

[0117] As shown in FIG. **5**, FIG. **5** is a perspective structural schematic view of a memory cell according to an embodiment of the present disclosure. As shown in FIG. **5**, the memory cell includes a drain region portion **11'**, a channel portion **12'**, a source region portion **13'**, and a gate portion **2'**. The drain region portion **11'**, the channel portion **12'**, and the source region portion **13'** are stacked along the height direction Z, respectively. The channel portion **12'** is disposed between the drain region portion **11'** and the source region portion **13'**. The gate portion **2'** is disposed on a side of the drain region portion **11'**, the channel portion **12'**, and the source region portion **13'**. The drain region portion **11'**, the channel portion **12'**, and the source region portion **13'** are each a single-crystal semiconductor.

[0118] In addition, a projection of the gate portion **2'** at least partially coincides with a projection of the channel portion **12'**on a projection plane in the height direction Z. The projection plane is located on a side of the drain region portion **11'**, the channel portion **12'**, and the source region portion **13'**, and extends along the height direction Z and the column direction Y.

[0119] As shown in FIG. **5**, it is easily understood by those skilled in the art that the drain region portion **11'** is a part of one of the drain region semiconductor strips **11** shown in FIG. **1** to FIG. **4**, the channel portion **12'** is a part of one of the channel semiconductor strips **12** shown in FIG. **1** to FIG. **4**, the source region portion **13'** is a part of one of the source region semiconductor strips shown in FIG. **1** to FIG. **4**, and the gate portion **2'** is a part of one of the gate strips **2** shown

in FIG. **1** to FIG. **4**. Therefore, in the height direction Z, the multiple memory subarray layers la includes multiple memory cells.

[0120] In addition, as shown in FIG. **5**, a storage structure portion **5'** is arranged between the gate portion **2'** and the drain region portion **11'**, the channel portion **12'**, and the source region portion **13'**. The storage structure portion **5'**may be configured to store electric charges; the gate portion **2'**, the drain region portion **11'**, the channel portion **12'**, the source region portion **13'**, and the storage structure portion **5'** sandwiched between the gate portion **2'** and the channel portion **12'**, constitutes a memory cell. The memory cell may indicate logical data 1 or logical data 0 by a state of storing or not storing electric charges in the storage structure portion **5'**, thereby enabling storage of data. The storage structure portion **5'** may include a charge trapping storage structure portion, a floating gate storage structure portion, or other types of capacitive storage structure portions.

[0121] Therefore, it will be understood by those skilled in the art that in the memory array **1** shown in FIG. **1** to FIG. **4**, a storage structure **5** is also arranged between the gate strip **2** and the drain region semiconductor strip **11**, the channel semiconductor strip **12**, and the source region semiconductor strip **13**, such that each memory cell can store electric charges by its corresponding storage structure portion **5'**.

[0122] In addition, it should be noted that for the convenience of the accompanying drawings showing the storage structure portion **5'**, the drain region portion **11'**, the channel portion **12'**, the source region portion **13'**, the gate portion **2'**, and the storage structure portion **5** shown in FIG. **5'** are shown for illustrative purposes only and do not represent actual dimensions or proportions.

[0123] It will be understood by those skilled in the art that, as above, the part of the gate strip **2** whose projection coincides with the projection of the adjacent channel semiconductor strip **12** on the above projection plane is configured as the control gate of the memory cell, such that the part of the gate strip **2** as the gate portion **2'** is the part whose projection coincides with the projection of the channel semiconductor strip **12** on the projection plane; the part of the channel semiconductor strip **12** whose projection coincides with the projection of the gate strip **2** on the above projection plane is the corresponding part of the channel semiconductor strip **12** as the well region, such that the part of the channel semiconductor strip **12** as the channel portion **12'** is the part of the channel semiconductor strip **12** whose projection coincides with the projection of the gate strip **2** on the projection plane; the parts of the drain region semiconductor strip **11** and the source region semiconductor strip **13** as the drain region portion **11'** and the source region portion **13'**, i.e., the part of the drain region semiconductor strip **11** or the source region semiconductor strip **13** arranged above or below the channel portion **12'**, are configured as the semiconductor drain region and the semiconductor source region, respectively.

[0124] Similarly, the storage structure portion **5'** is a part of the storage structure **5** disposed between the channel portion **12'** and the gate portion **2'**.

[0125] Referring further to FIG. **1** to FIG. **4**, a gate strip **2** is flanked by two adjacent columns of drain region semiconductor strips **11**, channel semiconductor strips **12**, and source region semiconductor strips **13**. Therefore, these two adjacent columns of drain region semiconductor strips **11**, channel semiconductor strips **12**, and source region semiconductor strips **13** share the same gate strip **2**. That is, for a gate strip **2**, in a memory subarray layer la, the gate strip cooperates with corresponding parts of the drain region semiconductor strip **11**, channel semiconductor strip **12**, and source region semiconductor strip **13** on the left side of the gate strip **2** to form a memory cell, and cooperates with corresponding parts of the drain region semiconductor strip **11**, channel semiconductor strip **12**, and source region semiconductor strip **13** on the right side of the gate strip **2** to form another memory cell. In other words, in the same row, two gate strips **2** are arranged on the left and right sides of one column of drain region semiconductor strip **11**, channel semiconductor strip **12**, and source region semiconductor strip **13** in one memory subarray layer la. In this way, the one column of drain region semiconductor strip **11**, channel semiconductor strip **12**, and source region semiconductor strip **13** cooperates with a part of the gate strip **2** on the left side to constitute a memory cell, and cooperates with a part of the gate strip **2** on the right side to constitute another memory cell. That is, in the same row, a column of drain region semiconductor strip **11**, channel semiconductor strip **12**, and source region semiconductor strip **13** in one memory subarray layer la is shared by two gate strips **2** on its left and right sides.

[0126] Specifically, further referring to FIG. **6**, FIG. **6** is a perspective schematic view of a structure in which of two memory cells share the same column of drain region semiconductor strip, channel semiconductor strip, and source region semiconductor strip. As shown in FIG. **6**, the source region portion **13'**, channel portion **12'**, and drain region portion **11'** stacked along the height direction Z' cooperate with the gate portion **2'** on the left side and the storage structure portion **5'** between them to constitute a memory cell; similarly, the drain region portion **11'**, the channel portion **12'**, and the source region portion **13'**cooperate with the gate portion **2'** on the right side and the storage structure portion **5'** between them to constitute another memory cell. In this way, both the two memory cells share the same drain region portion **11'**, channel portion **12'**, and the source region portion **13'**.

[0127] For ease of understanding, it may be considered that the drain region portion **11'**, the channel portion **12'**, and the source region portion **13'**cooperate with the gate portion **2'** on the left side and the storage structure portion **5'** between them to form a memory cell (bit); the drain region portion **11'**, the channel portion **12'**, and the source region portion **13'** cooperate with the gate portion **2'** on the right side and the storage structure portion **5'** between them to form another memory cell (bit).

[0128] Therefore, returning to FIG. **1** to FIG. **4**, it will be understood by those skilled in the art that a storage structure **5** is first arranged on each of the left and right sides in each word-line hole **4**, and the gate material is filled in the word-line hole **4** to form the gate strip **2**. That is, the two adjacent columns of drain region semiconductor strips **11**, channel semiconductor strips **12**, and source region semiconductor strips **13** in conjunction with the storage structures **5** share the same gate strip **2**.

[0129] In conjunction with FIG. **1** to FIG. **3**, FIG. **5** and FIG. **6**, in some embodiments, each of the above drain region semiconductor strip **11**, channel semiconductor strip **12**, and source region semiconductor strip **13** is a standard

strip structure. That is, each drain region semiconductor strip **11**, channel semiconductor strip **12**, and source region semiconductor strip **13** has a standard rectangular cross-section at each position along the respective extension direction. The memory cell corresponding to the embodiments may be illustrated specifically in FIG. **5** and FIG. **6**.

[0130] In other embodiments, in conjunction with FIG. **4** and FIG. **7**, FIG. **7** is a perspective structural schematic view of a memory cell according to another embodiment of the present disclosure. Each drain region semiconductor strip **11**, channel semiconductor strip **12**, and source region semiconductor strip **13** includes a body structure **15***a* and multiple protrusions **15***b*, respectively. The body structure **15***a* extends along the column direction Y and is in the shape of a strip. The multiple protrusions **15***b* are distributed on both sides of the body structure in two columns, and each column includes multiple protrusions **15***b* spaced apart, each protrusion **15***b* extending from the body structure **15***a* in the row direction X toward a corresponding gate strip **2** (word-line hole **4**) in a direction deviating from the body structure **15***a*. In other words, in each column of drain region semiconductor strips **11**, channel semiconductor strips **12**, and source region semiconductor strips **13**, two columns of protrusions **15***b* extend from the strip-shaped body structure **15***a* toward the gate strips **2** (word-line holes **4**) on each side. Therefore, it is understood by those skilled in the art that a surface of the storage structure **5** formed in the word-line hole **4** and a surface of the gate strip **2** near the drain region semiconductor strip **11**, the channel semiconductor strip **12**, and the source region semiconductor strip **13** are curved concave surfaces.

[0131] As shown in FIG. **7**, for each memory cell, the drain region portion **11'**, the channel portion **12'**, and the source region portion **13'**include a body portion **15***a'* and a protrusion portion **15***b'*, and each of the storage structure portion **5'** and the gate portion **2'**includes a concave surface corresponding to the protrusion portion **15***b'* to wrap a surface of the protrusion **15***b* away from the body structure **15***a*.

[0132] In the present disclosure, by making each drain region semiconductor strip **11**, channel semiconductor strip **12**, and source region semiconductor strip **13** include multiple protrusions **15***b* that are raised toward the two sides, it is possible to increase the surface area of each drain region semiconductor strip **11**, channel semiconductor strip **12**, and source region semiconductor strip **13**, thereby increasing the area of a corresponding region of the channel portion **12'** and the gate portion **2'** in each memory cell, thereby enhancing the performance of the memory device.

[0133] Specifically, the convex surface of the protrusion **15***b* away from the body structure **15***a* may be an arc or other form of convex surface, where the arc may include a columnar semicircular surface. The protrusions **15***b* of each column of drain region semiconductor strip **11**, channel semiconductor strip **12**, and source region semiconductor strip **13** form a columnar semicircle. The gate strip **2** corresponding to the protrusions **15***b* is arranged with a concave surface toward the drain region semiconductor strip **11**, the channel semiconductor strip **12**, and the source region semiconductor strip **13**, and the concave surface is a curved surface corresponding to the convex surface of the protrusions **15***b* to ensure that the gate strip **2** matches the channel semiconductor strip **12** at the corresponding position.

[0134] In some embodiments, as shown in FIG. **4**, the storage structure **5** extends inside the word-line hole **4** in the height direction Z and is arranged between the gate strip **2** and the adjacent drain region semiconductor strip **11**, the channel semiconductor strip **12**, and the source region semiconductor strip **13**, such that the storage structures **5** may form the multiple memory cells together with the parts of the drain region semiconductor strips **11**, the channel semiconductor strips **12**, and the source region semiconductor strips **13** at corresponding positions. In the present disclosure, the storage structure **5** may be a charge trapping storage structure, a floating gate storage structure, or other types of capacitive dielectric structures.

[0135] As shown in FIG. **8**, FIG. **8** is a perspective structural schematic view of a memory cell according to further another embodiment of the present disclosure. In the embodiments, the storage structure **5** is a charge trapping storage structure. As shown in FIG. **8**, the storage structure portion **5'** of the memory cell includes a first dielectric portion **51**, a charge storage portion **52**, and a second dielectric portion **53**. The first dielectric portion **51** is disposed between the charge storage portion **52** and the stacked drain region portion **11'**, the channel portion **12'**, and the source region portion **13'**; the charge storage portion **52** is disposed between the first dielectric portion **51** and the second dielectric portion **53**; and the second dielectric portion **53** is disposed between the charge storage portion **52** and the gate portion **2'**. The charge storage portion **52** is configured to store electrical charges to enable the memory cell to store data.

[0136] Therefore, with reference to FIG. **8**, it will be understood by those skilled in the art that the storage structure **5** in the memory array shown in FIG. **1** to FIG. **4** of the present disclosure includes a first dielectric layer, a charge storage layer, and a second dielectric layer, the first dielectric layer being disposed between the charge storage layer and the drain region semiconductor strip **11**, the channel semiconductor strip **12**, and the source region semiconductor strip **13**, the charge storage layer being disposed between the first dielectric layer and the second dielectric layer, and the second dielectric layer being disposed between the charge storage layer and the gate strip **2**.

[0137] The first dielectric layer (first dielectric portion **51**) and the second dielectric layer (second dielectric portion **53**) may be made of an insulating material, such as silicon oxide. The charge storage layer (charge storage portion **52**) may be made of a storage material with charge trapping properties, in particular, the charge storage layer may be made of silicon nitride. Therefore, the first dielectric layer (first dielectric portion **51**), the charge storage layer (charge storage portion **52**), and the second dielectric layer (second dielectric portion **53**) form an ONO storage structure. Specifically, reference thereto may be made to a manufacturing method involving a memory device of a charge trapping storage structure in the following embodiments.

[0138] In other embodiments, referring to FIG. **9**, FIG. **9** is a perspective schematic view of a partial structure of a memory device according to another embodiment of the present disclosure. In the embodiments, the storage structure **5** is a floating gate storage structure, and the floating gate storage structure extends at least partially within the word-line hole **4** in the height direction Z and is arranged between

the gate strip **2** and the drain region semiconductor strip **11**, the channel semiconductor strip **12**, and the source region semiconductor strip **13**.

[0139] Specifically, in conjunction with FIG. **9** and FIG. **10**, FIG. **10** is a perspective structural schematic view of a memory cell according to further another embodiment of the present disclosure. For each memory cell, the floating gate storage structure includes multiple floating gates **54** and an insulating dielectric wrapping each floating gate **54**. As shown in FIG. **9**, as can be seen through the word-line hole **4**, the multiple floating gates **54** are spaced along the height direction Z, and each floating gate **54** is arranged on a side of the channel semiconductor strip **12** along the row direction X and faces a corresponding part of the channel semiconductor strip **12**. As shown in FIG. **10**, the insulating dielectric wrapping the floating gate **54** includes a first insulating dielectric layer **56** between the channel semiconductor strip **12** and the floating gate **54** (referring also to the first insulating dielectric layer **85***a* shown in FIG. **41** below), and a second insulating dielectric layer covering several other faces of the floating gate **54** (not shown in FIG. **10**, referring to the second insulating dielectric layer **85***b* shown in FIG. **41** below). That is, the insulating dielectric is present between the floating gate **54** and the corresponding part of the channel semiconductor strip **12**, between two adjacent floating gates **54**, and between the floating gate **54** and the gate strip **2**. The insulating dielectric wraps every surface of the floating gate **54** to completely isolate the floating gate **54** from the rest of the structure.

[0140] Among them, the floating gate **54** may be made of polycrystalline silicon. The insulating dielectric may be made of an insulating material such as silicon oxide. Specifically, reference thereto may be made to a manufacturing method involving a memory device of a floating gate storage structure in the following embodiments.

[0141] In the memory cell of the charge trapping storage structure shown in FIG. **8** and FIG. **1** to FIG. **4**, the storage structure **5** is adopted with a first dielectric layer (first dielectric portion **51**), a charge storage layer (charge storage portion **52**), and a second dielectric layer (second dielectric portion **53**) to form an ONO storage structure.

[0142] The ONO storage structure is characterized by the fact that the charges injected into can be fixed near an injection point, while the floating gate storage structure (e.g., FIG. **9** to FIG. **11** is adopted with polysilicon as a floating gate) is characterized by the fact that the charges injected into can be uniformly distributed in over the entire floating gate **54**. In other words, in the ONO storage structure, the charges can only move in the injection/removal direction, i.e., the stored charges can only be fixed near the injection point and cannot move arbitrarily in the charge storage layer, especially cannot move in the extension direction of the charge storage layer. Therefore, for the ONO storage structure, the charge storage layer only needs to have an insulating dielectric on its front and back side, and the charges stored in each memory cell will be fixed near the injection point of the charge storage portion **52** and will not move along the same layer of the charge storage layer to the charge storage portion **52** in another memory cell. While in the floating gate storage structure, the charge can not only move in the injection/removal direction, but also can move arbitrarily in the floating gate **54**. Therefore, when the floating gate **54** is a continuous structure, the stored charges can move in the direction of extension of the floating gate **54** and thus move to the floating gate **54** in another memory cell. Therefore, for the floating gate storage structure, the floating gates **54** of each memory cell are independent, and each surface of each floating gate needs to be covered by an insulating dielectric, and need to be isolated from each other, to prevent the charges stored in the floating gates **54** in one memory cell from moving to the floating gates **54** in the other memory cells.

[0143] That is, for the memory cell and memory device of the charge trapping storage structure shown in FIG. **8** and FIG. **1** to FIG. **4**, the storage structure **5** may extend from top to bottom in the word-line hole **4**, and it is sufficient to arrange a first dielectric layer and a second dielectric layer on both sides of the charge storage layer, respectively.

[0144] In contrast, in the floating gate storage structure shown in FIG. **9** to FIG. **11**, the floating gates **54** of each memory cell are independent, and each surface of each floating gate **54** needs to be covered by an insulating dielectric, and need to be isolated from each other, to prevent the charges stored in the floating gates **54** in one memory cell from moving to the floating gates in other memory cells.

[0145] It will be understood by those skilled in the art that some parts of the insulating dielectric (e.g., the second insulating dielectric layer **85***b* mentioned above) are interconnected with each other, as long as it is possible to ensure that the floating gates **54** of each memory cell are independent of each other and that the surfaces of each floating gate **54** are wrapped with the insulating dielectric. Therefore, parts of the insulating dielectric (e.g., the second insulating dielectric layer **85***b* mentioned above) that wraps the floating gates **54** in the word-line hole **4** may extend substantially in the height direction, thereby wrapping the floating gates **54** of each memory cell. Specifically, reference to the memory device with a floating gate storage structure may be made to a manufacturing method involving a memory device of a floating gate storage structure in the following embodiments.

[0146] In addition, it will be understood by those skilled in the art that the storage structure **5** may be adopted with other types of storage structures, such as ferroelectric, variable resistance, or other types of capacitive storage structures.

[0147] In some embodiments, referring to FIG. **11**, FIG. **11** is a perspective structural schematic view of a memory device according to further another embodiment of the present disclosure. In FIG. **11**, only three layers of memory subarray layers la are shown, which are merely schematic, and it will be understood by those skilled in the art that the memory device includes multiple layers of memory subarray layers **1***a*, with each two layers of memory subarray layers la separated from each other by an interlayer isolation layer (formed by multiple interlayer isolation strips **14***a*). The memory device further includes multiple word-lines (WL) and multiple word-line connection lines **7**.

[0148] As above, the part of the gate strip **2** whose projection overlaps with the projection of the channel semiconductor strip **12** in an adjacent stacked structures **1***b*' on the above projection plane is configured as the control gate of the corresponding memory cell. Therefore, each gate strip **2** is configured to form the control gate (CG) of multiple memory cells. As is known, the control gates of a row of memory cells need to be connected to a corresponding word-line, through which a voltage is applied to the control gates of the row of the memory cells, thereby controlling the memory cells to perform various memory operations.

[0149] In the present disclosure, as shown in FIG. **11**, multiple word-lines are arranged on top of multiple memory subarray layers **1***a* and are spaced apart in the column direction Y, with each word-line extending along the row direction X. Each word-line is connected to multiple word-line connection lines **7**. The multiple word-line connection lines **7** connected to the same word-line extend along the height direction Z, respectively, and extend to the gate strips **2** in the multiple word-line holes **4** in the same row, respectively, to be connected to the gate strips **2** in the corresponding word-line holes **4**, thereby realizing the connection of the word-line to the control gates of the multiple memory cells in the same row of the multiple memory subarray layers **1***a*. It can be understood that the multiple word-line holes **4** and the multiple word-line connection lines **7** are arranged in a one-to-one correspondence.

[0150] Specifically, the word-line of the same row may be an individual word-line connected to the gate strip **2** in each word-line hole **4** of the same row. Of course, the word-line of the same row may include multiple different types of word-lines; the gate strips **2** in multiple word-line holes **4** of the same row may each be connected to the multiple different types of word-lines of the corresponding row. In some embodiments, as shown in FIG. **11**, multiple gate strips **2** in the same row are configured to be connected to two corresponding word-lines, i.e., each row of word-lines include an odd word-line **8***a* and an even word-line **8***b*. It should be noted that one odd word-line **8***a* and one even word-line **8***b* connected to the multiple gate strips **2** of the same row in the present disclosure are defined as one row of word-line corresponding to one row of gate strips **2**.

[0151] Specifically, the memory cells of the same row in the multiple memory subarray layers **1***a* are connected to the odd word-line **8***a* of the corresponding row through the odd word-line holes **4** of the same row, respectively; the others of the memory cells of the same row in the multiple memory subarray layers **1***a* are connected to the even word-line **8***b* of the corresponding row through the even word-line holes **4** of the same row, respectively. For example, a first part of the memory cells of the first row are connected to the odd word-line **8***a* of the first row through the first word-line hole **4**, the third word-line hole **4**, the fifth word-line hole **4** . . . respectively; a second part of the memory cells of the first row are connected to the even word-line **8***b* of the first row through the second word-line hole **4**, the fourth word-line hole **4**, the sixth word-line hole **4** . . . , respectively. That is, the odd word-line **8***a* of the word-line of the same row is connected to multiple memory cells (the first part of the memory cells) in the multiple memory subarray layers **1***a* corresponding to the odd word-line holes **4** of this row; the even word-line **8***b* of the word-line of the same row are connected to multiple memory cells (the second part of the memory cells) in the multiple memory subarray layers **1***a* corresponding to the even word-line holes **4** of this row.

[0152] As above, each drain region semiconductor strip **11**, channel semiconductor strip **12**, and source region semiconductor strip **13** has odd word-line holes **4** distributed on one side thereof and even word-line holes **4** distributed on the other side thereof. Therefore, a part of the drain region semiconductor strip **11**, channel semiconductor strip **12**, and source region semiconductor strip **13** in each same column in each memory subarray layer **1***a* may cooperate with an odd number gate strip **2** in an odd word-line hole **4** on one side thereof and a storage structure **5** arranged between the gate strip **2** and the drain region semiconductor strip **11**, channel semiconductor strip **12**, and source region semiconductor strip **13**, to form a memory cell, i.e., a first memory cell; and may cooperated with an even word-line hole **4** on the other side thereof and a storage structure **5** arranged therebetween, to form another memory cell, i.e., a second memory cell.

[0153] In other words, the gate strip **2** filled in each word-line hole **4** may be configured to form a memory cell (bit) in conjunction with the drain region semiconductor strip **11**, the channel semiconductor strip **12**, the source region semiconductor strip **13**, and the storage structure **5** on the left side in each memory subarray layer **1***a*; and may be configured to form another memory cell (bit), i.e., a second memory cell, in conjunction with the drain region semiconductor strip **11**, the channel semiconductor strip **12**, the source region semiconductor strip **13**, and the storage structure **5** on the right side in each memory subarray layer **1***a*.

[0154] Therefore, for an odd word-line hole **4**, the left half or right half of each drain region semiconductor strip **11**, channel semiconductor strip **12**, and source region semiconductor strip **13** in the same column in each memory subarray layer **1***a* may cooperate with the corresponding gate strip **2** in the odd word-line hole **4** to form a first memory cell. Specifically, in each memory subarray layer **1***a*, for each column of drain region semiconductor strip **11**, channel semiconductor strip **12**, and source region semiconductor strip **13**; for example, word-line holes **4** on the left side of the first column of drain region semiconductor strip **11**, channel semiconductor strip **12**, and source region semiconductor strip **13** counting from left to right are odd word-line holes, and a part of the drain region semiconductor strip **11**, channel semiconductor strip **12**, and source region semiconductor strip **13** of that column cooperate with a gate strip **2** in a corresponding odd word-line hole **4** on its left side for forming a first memory cell. Word-line holes **4** on the right side of the second column of the drain region semiconductor strip **11**, channel semiconductor strip **12**, and source region semiconductor strip **13** counting from left to right are odd word-line holes, and a part of the drain region semiconductor strip **11**, channel semiconductor strip **12**, and source region semiconductor strip **13** of this column cooperate with a gate strip **2** in a corresponding odd word-line hole **4** on its right side also for constituting a first memory cell.

[0155] Similarly, for an even word-line hole **4**, the other half of each drain region semiconductor strip **11**, channel semiconductor strip **12**, and source region semiconductor strip **13** in the same column in each memory subarray layer **1***a* may cooperate with a corresponding gate strip **2** in the even word-line hole **4** to form a second memory cell. Specifically, in each memory subarray layer **1***a*, for each column of drain region semiconductor strip **11**, channel semiconductor strip **12**, and source region semiconductor strip **13**: for example, word-line holes **4** on the right side of the first column of drain region semiconductor strip **11**, channel semiconductor strip **12**, and source region semiconductor strip **13** from left to right are even word-line holes, and a part of the drain region semiconductor strip **11**, channel semiconductor strip **12**, and source region semiconductor strip **13** of that column cooperate with a gate strip **2** in a corresponding even word-line hole **4** on its right side for forming a second memory cell. Word-line holes **4** on the left side of the second column of the drain region semiconductor strip **11**, channel semiconductor strip **12**, and source region

semiconductor strip **13** from left to right are even word-line holes, and a part of the drain region semiconductor strip **11**, channel semiconductor strip **12**, and source region semiconductor strip **13** of this column cooperate with a gate strip **2** in a corresponding even word-line hole **4** on its left side also for forming a second memory cell.

[0156] Therefore, in the present disclosure, each gate strip **2** in the memory array **1** is connected to a corresponding word-line, and the gate strips **2** in the same row are connected to the corresponding row of word-line. The gate strips **2** in the odd word-line holes **4** in the same row are connected to the odd word-lines **8***a* in the corresponding row of word-line, and the gate strips **2** in the even word-line holes **4** in the same row are connected to the even word-line **8***b* in the corresponding row of word-line. In other words, all the first memory cells of the same row in the multiple memory subarray layers **1***a* are each connected to an odd word-line **8***a* of the corresponding row through odd number gate strips **2** in odd word-line holes **4** of the same row, and all the second memory cells of the same row in the multiple memory subarray layers **1***a* are each connected to an even word-line **8***a* of the corresponding row through even number gate strips **2** in even word-line holes **4** of the same row.

[0157] Of course, in other embodiments, it may be, in the same row, every adjacent three, four or five word-line holes **4**, etc. are configured as a group, then each line word-line includes three, four, five, etc. different types of word-lines, and the gate strip **2** in each word-line hole **4** in each group is connected to a different type of word-line.

[0158] Furthermore, as shown in FIG. **11**, in the present disclosure, the number of rows of word-lines may be defined to be the same as the number of rows of word-line holes **4**. That is, as shown in FIG. **11**, although the gate strips **2** in the word-line holes **4** of the same row are connected to a corresponding odd word-line **8***a* and a corresponding even word-line **8***b*, one odd word-line **8***a* and one even word-line **8***b* corresponding to the word-line holes **4** of the same row may be defined as one row of word-lines corresponding to the row of gate strips **2** (word-line holes **4**). That is, each row of word-line includes one odd word-line **8***a* and one even word-line **8***b*, and the number of rows of word-lines is the same as the number of rows of the word-line holes **4**. It should also be noted that, as shown in FIG. **11**, in each row, each of the left side and right side of a word-line hole **4** not disposed on ends of the memory array correspond to a column of drain region semiconductor strips **11**, channel semiconductor strips **12**, and source region semiconductor strips **13**. However, from left to right, for a word-line hole **4** disposed on a left terminal of the memory array (first terminal), only the right side of the word-line hole **4** corresponds to a column of drain region semiconductor strips **11**, channel semiconductor strips **12**, and source region semiconductor strips **13**; for a word-line hole **4** disposed on a right terminal of the memory array (last terminal), only the left side of the word-line hole **4** corresponds to a column of drain region semiconductor strips **11**, channel semiconductor strips **12**, and source region semiconductor strips **13**. Therefore, it is understood by those skilled in the art that in each row, the word-line hole **4** at the first terminal and the word-line hole **4** at the last terminal functionally constitute a complete word-line hole.

[0159] As shown in FIG. **11**, in the embodiments, multiple word-lines may be arranged above the multiple memory subarray layers **1***a* in the memory device, each of which is connected to corresponding word-line holes **4** through word-line connection lines **7**.

[0160] Of course, it is understood by those skilled in the art that multiple word-lines may be arranged on another stacked chip, and the stacked chip may be stacked with and electrically connected to a chip in which the memory device is located. For example, the stacked chip may be stacked with the chip in which the memory device is located by means of hybrid bonding. A terminal of each word-line connection line **7** in the memory device away from the corresponding gate strip **2** serves as a word-line connection terminal of the memory device for connecting to the stacked chip stacked together in the height direction Z of the memory device.

[0161] In addition, as shown in FIG. **11**, in another embodiments, the memory device may further include multiple word-line lead lines **6***a* or **6***b*, each word-line further corresponding to a word-line lead line **6***a* or **6***b*, respectively, with the word-line lead line **6***a* or **6***b* extending in the height direction Z and away from the gate strips **2** with respect to the word-line connection lines **7**. A terminal of the word-line lead line **6***a* or **6***b* away from the word-line is configured as a word-line connection terminal for connecting to the stacked chip stacked together in the height direction Z of the memory device. That is, the word-lines are arranged on the memory array chip and the control circuit is arranged on the other chip. Of course, those skilled in the art can understand that each word-line may be connected to the control circuit on the chip on which the memory device is located through a corresponding word-line lead line **6***a* or **6***b*, i.e., the relevant lines, memory array, and control circuit are arranged on the same chip.

[0162] Referring further to FIG. **12**, FIG. **12** is a structural schematic view of a circuit connection of part of memory cells of a memory device according to an embodiment of the present disclosure. As shown in FIG. **12**, for each column of drain region semiconductor strips **11**, channel semiconductor strips **12**, and source region semiconductor strips **13** of the multiple memory subarray layers **1***a*: the multiple drain region semiconductor strips **11** in the same column are led out through different bit line connection lines **11***a* arranged on an end of each drain region semiconductor strip **11**, the bit line connection lines **11***a* extending along the height direction Z as shown in FIG. **12**. For example, for the drain region semiconductor strips **11**, the channel semiconductor strips **12**, and the source region semiconductor strips **13** in the first column, the drain region semiconductor strip **11** in the first memory subarray layer **1***a* is led out at its terminal by a bit line connection line **11***a*, where a terminal of the bit line connection line **11***a* away from the drain region semiconductor strip **11** may be configured as a bit line connection terminal; the drain region semiconductor strip **11** in the second memory subarray layer **1***a* is led out at its terminal by another bit line connection line **11***a*, and a terminal of the another bit line connection line **11***a* away from the corresponding drain region semiconductor strip **11** is configured as another bit line connection terminal; . . . , and so on. Therefore, each drain region semiconductor strip **11** may serve as a bit line and receive a bit line voltage through the each bit line connection terminal.

[0163] It will be understood by those skilled in the art that the memory device may be connected to another stacked chip stacked together in the height direction Z of the

memory device through the bit line connection terminal, and provide a bit line voltage to each drain region semiconductor strip **11** in the memory device as a bit line through the bit line connection terminal by means of another stacked chip. Of course, the bit line connection terminal may be further configured to be connected to the control circuit on the chip where the memory device is located, i.e., the relevant lines, the memory array **1**, and the control circuit are arranged on the same chip.

[0164] Similarly, for each column of drain region semiconductor strips **11**, channel semiconductor strips **12**, and source region semiconductor strips **13** of the multiple memory subarray layers **1***a*, the multiple source region semiconductor strips **13** in the same column are led out through different source connection lines **13***a* disposed on a terminal of each source region semiconductor strip, and the source connection lines **13***a* extend along the height direction Z.

[0165] As shown in FIG. **12**, all of the source connection lines **13***a* in the memory device may be connected to the same common source line **13***b*, respectively, and a source voltage is applied to the source region semiconductor strips **13** in the memory device through the common source line **13***b* and the source connection lines **13***a*.

[0166] Of course, it is understood by those skilled in the art that in other embodiments, the memory device may include multiple common source lines **13***b*, such as a predetermined number of the multiple common source lines **13***b*, and the source region semiconductor strips **13** in the multiple memory subarray layers **1***a* may be connected to different multiple common source lines **13***b* via corresponding source connection lines **13***a* according to a predetermined rule. In addition, also similar to the bit line connection line **11***a* corresponding to the drain region semiconductor strip **11**, a terminal of the source connection line **13***a* corresponding to each source region semiconductor strip **13** away from the source region semiconductor strip **13** may be configured as a source connection terminal to receive the source voltage.

[0167] Referring further to FIG. **12**, the memory device may further include a common source lead line **13***d* connected to the common source line **13***b*, where the common source line **13***b* is connected to all source connection lines **13***a* in the memory device. The common source lead line **13***d* extends away from the memory array **1** in the memory device and in the height direction Z. A terminal of the common source lead line **13***d* away from the common source line **13***b* may be configured as a common source connection terminal for connecting to another stacked chip stacked together in the height direction Z in the memory device. Of course, the common source connection terminal may further be configured to connect to the control circuit on the chip on which the memory device is located, i.e., the relevant lines, the memory array, and the control circuit are arranged on the same chip.

[0168] Of course, it can be understood by those skilled in the art that the common source line **13***b* may be arranged in another stacked chip stacked with the memory device in the height direction Z. That is, a terminal of the source connection line **13***a* away from the corresponding source region semiconductor strip **13** may be configured as a source connection terminal for connection with another stacked chip stacked with the memory device in the height direction Z, such that the common source line **13***b* are arranged in another stacked chip.

[0169] As above, for each column of drain region semiconductor strips **11**, channel semiconductor strips **12**, and source region semiconductor strips **13** of the multiple memory subarray layers **1***a*, the multiple channel region semiconductor strips **12** in the same column are led out through different well region connection lines **12***a* disposed on a terminal of each channel semiconductor strip **12**, and the well region connection lines **12***a* extends along the height direction Z.

[0170] As shown in FIG. **12**, all of the well region connection lines **12***a* in the memory device are each connected to the same common well region line **12***b*, thereby uniformly applying a well region voltage to all the channel semiconductor strips **12** in the memory device through the common well region line **12***b*.

[0171] Of course, it will be understood by those skilled in the art that the corresponding well region connection line **12***a* of each channel semiconductor strip **12** in the memory device may be connected to multiple separate common well region lines **12***b* to apply a well voltage to each channel semiconductor strip **12** separately. For example, similar to the above, a terminal of the well region connection line **12***a* corresponding to each channel semiconductor strip **12** away from the channel semiconductor strip **12** serves as a well connection terminal which is configured to receive a separate well voltage.

[0172] Referring further to FIG. **12**, all of the well region connection lines **12***a* in the memory device are each connected to the same common well region line **12***b*; the memory device may further include a common well region lead line **12***d* connected to the common well region line **12***b*, with the common well region lead line **12***d* extending away from the memory array **1** in the memory device and along the height direction Z. A terminal of the common well region lead line **12***d* away from the common well region line **12***b* may be configured as a common well region connection terminal for connection to another stacked chip stacked with the memory device in the height direction Z. Of course, the common well region connection terminal may further be configured for connection to the control circuit on the chip on which the memory device is located, i.e., the associated lines, the memory array **1**, and the control circuit are arranged on the same chip. That is, through the common well region line **12***b* it is possible to connect all the channel semiconductor strips **12** in the memory device together to receive the same well voltage. In the embodiments, the channel semiconductor strip **12** may be a p-type semiconductor strip forming a p-well, and all the channel semiconductor strips **12** in the memory device are connected together through the common well region line **12***b*, receiving the same well voltage through the common well region line **12***b*. In addition, in the embodiments, the memory device may read signals through the same common source line **13***b*.

[0173] Of course, it will be understood by those skilled in the art that the common well region line **12***b* may be arranged in another stacked chip stacked together with the memory device in the height direction Z. That is, a terminal of the well region connection line **12***a* away from the corresponding channel semiconductor strip **12** may be configured as a well region connection terminal for connection to another stacked chip stacked together with the memory

device in the height direction Z, thereby arranging the common well region line **12***b* in another stacked chip.

[0174] In some embodiments, it is noted that, as shown in FIG. **11** and FIG. **13**, in the present disclosure, connecting wires, such as word-line **8***a* or **8***b*, word-line connection line **7**, word-line lead line **6***a* or **6***b*, common source line **13***b*, common well region line **12***b*, etc. are arranged in the memory device, especially on the same side of the memory array **1** in the memory device, i.e., arranged above the memory array **1**. Therefore, it may be ensured that the drain region semiconductor strips **11**, the channel semiconductor strips **12**, and the source region semiconductor strips **13** in the memory array **1**may be each formed as single-crystal semiconductor strips by epitaxial growth, while only polycrystalline semiconductor strips can be formed by the deposition method. Compared to polycrystalline semiconductor strips formed by deposition, the drain region semiconductor strips **11**, channel semiconductor strips **12**, and source region semiconductor strips **13** formed by epitaxial growth of the present disclosure may have superior device performance and greatly improve the performance of the relevant memory device. Specifically, when comparing the memory cell adopted with a single-crystal semiconductor (single-crystal drain region semiconductor strip **11**, channel semiconductor strip **12**, and source region semiconductor strip **13**) to the memory cell adopted with a polycrystalline semiconductor, the memory cell with the polycrystalline semiconductor has more interfaces, along which electrons move when passing through the polycrystalline semiconductor, i.e., the distance of electron movement increases and the current decreases significantly. According to a practical empirical test, the current of the memory cell with a polycrystalline semiconductor is only 1/10 of the current of the memory cell with a single-crystal semiconductor. Therefore, the memory device of the present disclosure, with the memory cell with a single-crystal semiconductor, may greatly improve the performance of the memory device. In addition, the low current of the memory cell with the polycrystalline semiconductor affects the read window between the read/write operation (PGM) and the erase operation (ERS) of the memory cell, which has a great impact on the reliability of the memory device, especially for the NOR memory device. In addition, for NOR memory devices, when a hot carrier injection (HCI) method is applied for read/write operations, a single-crystal semiconductor must be adopted to accomplish this.

[0175] In addition, since the connecting wires in the present disclosure are arranged on the same side of the memory array **1** in the memory device, it is more convenient to perform the bonding stacking process in three dimensions with the stacked chips, thereby improving the performance of the related memory devices, and manufacturing the chips separately is conducive to optimizing the process and reducing the manufacturing time.

[0176] It can be understood by those skilled in the art that in some embodiments, in order for the memory device to obtain better performance, the outermost memory cell may generally serve as a dummy memory cell (dummy cell) and does not perform actual storage works. For example, the memory cells included in the lowermost memory subarray layer **1***a* may be configured as dummy memory cells. In addition, in some embodiments, the leftmost and rightmost columns of the memory device are each arranged with a column of drain region semiconductor strips **11**, channel semiconductor strips **12**, and source region semiconductor strips **13**, respectively. The memory cells formed by the leftmost column of the drain region semiconductor strips **11**, the channel semiconductor strips **12**, and the source region semiconductor strips **13**, together with the gate strips **2** in the word-line holes **4** on the right side and the storage structures **5** between them, and the memory cells formed by the rightmost column of drain region semiconductor strips **11**, channel semiconductor strips **12** and source region semiconductor strips **13**, together with the gate strips **2** in the word-line hole **4** on the left side and the storage structures **5** between them, are also taken as dummy memory cells not participating in the actual storage work.

[0177] Therefore, in the present disclosure, unless intentionally pointed out, the memory subarray layers **1***a* in the entire specification do not include the lowermost memory subarray layer involved in the dummy memory cells (dummy cells); nor do the drain region semiconductor strips **11**, the channel semiconductor strips **12**, and the source region semiconductor strips **13** include the leftmost column of drain region semiconductor strips **11**, channel semiconductor strips **12**, and source region semiconductor strips **13**, and the rightmost column of drain region semiconductor strips **11**, channel semiconductor strips **12**, and source region semiconductor strips **13**, involved in the dummy memory cells (dummy cells).

[0178] Therefore, as above, in the same row, from left to right, the first word-line hole **4** only corresponds to a column of drain region semiconductor strips **11**, channel semiconductor strips **12**, and source region semiconductor strips **13** on the right side; the last word-line hole **4** only corresponds to a column of drain region semiconductor strips **11**, channel semiconductor strips **12**, and source region semiconductor strips **13** on the left side. Therefore, those skilled in the art can understand that the first and last word-line holes functionally constitute a complete word-line hole.

[0179] In conjunction with FIG. **13** to FIG. **16**, FIG. **13** is a schematic view of a circuitry of the memory device shown in FIG. **11**, FIG. **14** is a schematic sketch of a plan view of the memory device shown in FIG. **11**, FIG. **15** is a schematic view of a memory cell corresponding to each layer of bit lines, and FIG. **16** is a schematic view of a three-dimensional distribution of word-lines and bit lines.

[0180] As shown in FIG. **13**, the memory device includes multiple memory subarray layers **1***a* (six layers herein illustrated in FIG. **13**), and the drain region semiconductor strips **11** in the multiple memory subarray layers **1***a* serve as bit lines, such as BL-**1**-**1**, BL-**1**-**2**, BL-**1**-**3**, BL-**1**-**4**, BL-**1**-**5**, BL-**1**-**6**; multiple columns of drain region semiconductor strips **11** in each memory subarray layer **1***a* constitute multiple columns of bit lines, such as BL-**1**-**1**, BL-**2**-**1**, . . . ; the source region semiconductors **13** in the multiple memory subarray layers la in memory device are connected to a common source line **13***b*; the channel semiconductor strips **12** in the multiple memory subarray layers **1***a* in memory device are connected to a common well region line **12***b*. In addition, the gate strip **2** in the same word-line hole **4**, together with the drain region semiconductor layers **11***c*, the channel semiconductor layers **12***c*, and the source region semiconductor layers **13***c* on the left and right sides, forms two columns of memory cells (as shown in the middle two columns of memory cells), respectively. The gate strips **2** corresponding to the odd number word holes **4** are connected to an odd word-line WL-a, such as the first, fourth

column memory cells, which correspond to the first word-line holes and third word-line holes, respectively; and the gate strips **2** corresponding to the even number word holes **4** are connected to an even word-line WL-b, such as the second, third column memory cells, which correspond to the second word-line holes.

[0181] As shown in FIG. **14** to FIG. **16**, in each memory subarray layer **1***a*, for the drain region semiconductor strips **11**, channel semiconductor strips **12**, and source region semiconductor strips **13** extending along the column direction, one column of semiconductor strip structure **1***b* forms a memory cell (bit) with the gate strip **2** in the left word-line hole **4** and another memory cell (bit) with the gate strip **2** in the right word-line hole **4**. The first row of odd word-line holes **4**, such as hole-**1**, hole-**3**, . . . , are connected to the first row of odd word-line WL-**1**-*a*, and the first row of even word-line holes, such as hole-**2**, hole-**4**, . . . , are connected to the first row of even word-line WL-**1**-*b*.

[0182] As shown in FIG. **16**, assume that the memory device includes P layers of memory subarray layers **1***a*, M rows of word-lines, and N columns of bit lines. Then, each memory subarray layer **1***a* includes N columns of drain region semiconductor strips **11** as bit lines, such as shown as BL-**1**-**1**, . . . , BL-N-**1**; for the P-th memory subarray layer **1***a*, such as BL-**1**-**1**, . . . , BL-N-P as shown, the memory device includes N*P drain region semiconductor strips **11** as bit lines. M rows of word-lines, e.g., WL-**1**-*a/b*, . . . , WL-M-a/b, each have a projection crossed with a projection of each of the N columns of bit lines on a projection plane defined by the row direction X and the column direction Y, respectively, to form multiple memory cells. P, M and N are all natural numbers greater than 0.

[0183] According to the above conditions, it is understood by those skilled in the art that in the same row direction X, the memory device includes (N+1) word-line holes **4**, such as shown as WL-hole-**1**-**1**, . . . , WL-hole-**1**-(N+1); and in the same column direction Y, the memory device includes M word-line holes **4**, such as shown as WL-hole-**1**-(N+1), . . . , WL-hole-M-(N+1). A side of each column of drain region semiconductor strips **11**, channel semiconductor strips **12**, and source region semiconductor strips **13** corresponds to M word-line holes **4**. Each row of word-lines (one odd word-line **8***a* and one even word-line **8***b*) corresponds to (N+1) word-line holes **4**. As above, in the same row, the word-line holes **4** at the first and last ends each correspond to only one memory cell in each memory subarray layer **1***a*, and therefore the word-line holes **4** at the first and last ends can be functionally regarded as a complete word-line hole; while other word-line holes **4** correspond to two memory cells (one on each of the left and right sides) in each memory subarray layer **1***a*. Therefore, each row of word-lines corresponds to N*2*P memory cells. When N is an even number, an odd word-line **8***a* corresponds to (N/2+1) word-line holes, which includes word-line holes **4** at the first and last ends of the same row, that is, an odd word-line **8***a* also corresponds to N/2 complete word-line holes **4**, corresponding to (N/2)*P*2 memory cells. An even word-line **8***b* corresponds to N/2 word-line holes **4**, corresponding to (N/2)*P*2 memory cells. In other words, the number of memory cells corresponding to an odd word-lines **8***a* and the number of memory cells corresponding to an even word-lines **8***b* are the same.

[0184] In some embodiments, assume that the memory device specifically includes 8 layers of the memory subarray layers **1***a* and 1024 rows of word-lines, each row of word-lines includes an odd word-line **8***a* and an even word-line **8***b*, each layer of the memory subarray layer **1***a* includes 2048 columns of the drain region semiconductor strips **11** as bit lines, and the memory device includes 2048*8 of the drain region semiconductor strips **11** as bit lines.

[0185] In the same row direction X, the memory device includes (2048+1=2049) word-line holes **4**; in the same column direction Y, the memory device includes 1024 word-line holes **4**. Each drain region semiconductor strip **11** as a bit line corresponds to 1024 word-line holes **4**, corresponding to 1024*2 memory cells. Each row of word-lines corresponds to (2048+1=2049) word-line holes **4**. The word-line holes **4** at the first and last terminals each correspond to only one memory cell in each memory subarray layer **1***a*, which functionally constitutes a complete word-line hole **4**, which corresponds to 2048*2*8=32K memory cells. N is an even number 2048, then an odd word-line **8***a* corresponds to (2048/2+1=1025) word-line holes, which includes the word-line holes**4** at the first and last ends of the same row, that is, an odd word-line **8***a* also corresponds to 1024 complete word-line holes**4**, which corresponds to (2048/2)*8*2 memory cells; an even word-line **8***b* corresponds to 2048/2 word-line holes**4**, which corresponds to (2048/2)*8*2 memory cells.

[0186] In the memory device, ⅛ of the memory cells corresponding to a word-line, that is, 1024*2 memory cells, may be defined as one memory page (128 complete word-line holes **4**). In the memory device, 32K memory cells corresponding to one word-line may be defined as a sector, which can be understood that one sector corresponds to 2 word-lines, (2048+1) word-line holes**4** (2048 complete word-line holes**4**), and 2048*2*8 memory cells (bit).

[0187] In the memory device, 16 sectors may be defined to form a sub memory device (eblk) including 0.5 M memory cells (2048*2*8*16=1024*2*2*8*16=1024*1024*0.5). In specific embodiments, the memory device includes 64 sub memory devices **10** including 32 M memory cells. Each memory device shares a common source line **13***b* and a common well region line **12***b*.

[0188] The memory device provided in the embodiments includes a memory array **1**, and the memory array **1** includes multiple memory cells distributed in a three-dimensional array; the memory array **1** includes multiple memory sub-array layers **1***a* stacked sequentially along a height direction Z, and each memory subarray layer **1***a* includes a drain region semiconductor layer, a channel semiconductor layer, and a source region semiconductor layer stacked along the height direction Z; the drain region semiconductor layer, channel semiconductor layer, and source region semiconductor layer in each memory subarray layer **1***a* include multiple drain region semiconductor strips **11**, channel semiconductor strips **12**, and source region semiconductor strips **13**, respectively, distributed along a row direction X, and each drain region semiconductor strip **11**, channel semiconductor strip **12**, and source region semiconductor strip **13** extends along a column direction Y; multiple gate strips **2** distributed along the column direction Y are arranged on each side of each column of drain region semiconductor strips **11**, channel semiconductor strips **12**, and source region semiconductor strips **13**, each gate strip **2** extending along the height direction Z; in the height direction Z, a projection of at least a part of each gate strip **2** coincides with a projection of a part of a corresponding channel semicon-

ductor strip **12** in each memory subarray layer **1***a* on a projection plane, the projection plane extending along the height direction Z and the column direction Y. A part of the gate strip **2**, a corresponding part of the channel semiconductor strip **12**, a part of the drain region semiconductor strip **11** adjacent to the corresponding part of the channel semiconductor strip **12**, and a part of the source region semiconductor strip **13** adjacent to the corresponding part of the channel semiconductor strip **12** are configured to form a memory cell. The memory device has a higher storage density compared to a two-dimensional memory array.

[0189] As above, the memory device of the present disclosure includes at least two structures of memory cells. In some embodiments, in combination with FIG. **5**, FIG. **7**, FIG. **8** and FIG. **10**, a memory cell is provided that includes a drain region portion **11'**, a channel portion **12'**, a source region portion **13'**, and a gate portion **2'**. The drain region portion **11'**, the channel portion **12'**, and the source region portion **13'** are stacked along the height direction Z, and the gate portion **2'** is disposed on one side of the drain region portion **11'**, the channel portion **12'**, and the source region portion **13'**, and extends along the height direction Z. In the height direction Z, a projection of the gate portion **2'**partially overlaps with a projection of the channel portion **12'**on a projection plane extending along the height direction Z. A storage structure portion **5'** is arranged between the gate portion **2'** and the drain region portion **11'**, the channel portion **12'**, and the source region portion **13'**.

[0190] The drain region portion **11'** is a part of the drain region semiconductor layer, the channel portion **12'** is a part of the channel semiconductor layer, and the source region portion **13'** is a part of the source region semiconductor layer of the memory device provided in the above embodiments. The specific structures, functions, and lamination methods of the drain region portion **11'**, the channel portion **12'**, the source region portion **13'**, and the storage structure portion **5'** can be found in those of the drain region semiconductor layer, the channel semiconductor layer, the source region semiconductor layer, and the storage structure **5'** in each of the memory subarray layers **1***a* described above, and the same or similar technical effects can be achieved, which will not be repeated herein.

[0191] When the drain region portion **11'**, the channel portion **12'**, and the source region portion **13'** are each in a strip structure and the storage structure portion **5'** is a charge trapping storage structure portion, the specific structure of the memory cell can be seen in FIG. **5**, and other structures of the memory cell can be seen in the relevant description of FIG. **5** above. When the drain region portion **11'**, the channel portion **12'**, and the source region portion **13'**each include the body structure **15***a* and multiple protrusions **15***b*, and the storage structure portion **5'** is a charge trapping storage structure portion, the specific structure of the memory cell can be seen in FIG. **7**, and other structures of the memory cell can be found in the above description of FIG. **7**. When the storage structure portion **5'** is a floating gate storage structure portion, the specific structure of the memory cell can be seen in FIG. **10** and FIG. **11**, and other structures of the memory cell can be seen in the above description of FIG. **10** and FIG. **11**.

[0192] As shown in FIG. **17**, FIG. **17** is a flowchart of a manufacturing method of a memory device according to an embodiment of the present disclosure. In the embodiments, a manufacturing method of a memory device is provided that may be configured to prepare the memory device provided in FIG. **1** to FIG. **4** of the above embodiments, and the storage structure **5** of the memory device is a charge trapping storage structure. Specifically, the method includes operations at blocks illustrated in FIG. **17**.

[0193] At step S**21**: providing a semiconductor substrate.

[0194] As shown in FIG. **18**, FIG. **18** is a cross-sectional view of a semiconductor substrate according to an embodiment of the present disclosure. The semiconductor substrate includes a substrate **81**, a first single-crystal sacrificial semiconductor layer **82** arranged on the substrate **81**, and two memory subarray layers la and a second single-crystal sacrificial semiconductor layer **14** stacked and formed alternately in sequence on the first single-crystal sacrificial semiconductor layer **82**, until another two memory subarray layers **1***a* are formed uppermost.

[0195] The substrate **81** may be a single-crystal substrate **81**; specifically, it may be made of single-crystal silicon. The first single-crystal sacrificial semiconductor layer **82** and/or the second single-crystal sacrificial semiconductor layer **14** may be made of silicon germanium (SiGe). The multiple memory subarray layers la are sequentially layered in a height direction Z perpendicular to the substrate **81**. Each memory subarray layer la includes a drain region semiconductor layer **11***c*, a channel semiconductor layer **12***c*', and a source region semiconductor layer **13***c* stacked along the height direction Z. Two adjacent memory subarray layers **1***a* in the height direction Z may share a common source region. The two adjacent memory subarray layers **1***a* may include sequentially stacked drain region semiconductor layer **11***c*, channel semiconductor layer **12***c*', source region semiconductor layer **13***c*, channel semiconductor layer **12***c*', and drain region semiconductor layer **11***c*, to achieve sharing the common source region semiconductor layer **13***c*. Therefore, for common-source memory subarray layers **1***a*, a second single-crystal sacrificial semiconductor layer **14** is arranged on every two memory subarray layers **1***a* to isolate from the other two memory subarray layers **1***a*. The second single-crystal sacrificial semiconductor layer **14** may be made of silicon germanium (SiGe).

[0196] It should be noted that the structure shown in FIG. **18** only exemplarily illustrates part of the structure of the semiconductor substrate; it is understood by those skilled in the art that between the first single-crystal sacrificial semiconductor layer **82** and the second single-crystal sacrificial semiconductor layer **14** shown in FIG. **18**, two memory subarray layers **1***a* sharing a common source region semiconductor layer **13***c* are arranged. For the sake of brevity of the accompanying drawings, one layer of the memory subarray layer **1***a* is shown schematically only for illustrative purposes only.

[0197] In some embodiments, step S**21** may specifically include the following.

[0198] Step S**211***a*: providing a substrate **81**.

[0199] The substrate **81** may be a single-crystal substrate **81**; specifically, it may be single-crystal silicon.

[0200] Step S**212***a*: forming multiple memory subarray layers la sequentially on the substrate **81** along the height direction Z.

[0201] Step S**212***a* may specifically include the following.

[0202] Step a: forming the first single-crystal sacrificial semiconductor layer **82** on the substrate **81** in epitaxial growth.

[0203] The first single-crystal sacrificial semiconductor layer **82** may be silicon germanium (SiGe).

[0204] Step b: forming two memory subarray layers la and a second single-crystal sacrificial semiconductor layer **14** alternately in sequence by epitaxial growth on the first single-crystal sacrificial semiconductor layer **82**; continuing to form another two memory subarray layers **1***a*, optionally continuing to repeatedly stack another second single-crystal sacrificial semiconductor layer **14** and another two common-source memory subarray layers **1***a*, until forming uppermost two common-source memory subarray layers.

[0205] The material of the second single-crystal sacrificial semiconductor layer **14** is the same as the material of the first single-crystal sacrificial semiconductor layer **82**, which may also be silicon germanium (SiGe).

[0206] It is understood by those skilled in the art that the purpose of providing the first single-crystal sacrificial semiconductor layer **82** on the substrate **81** first is to avoid electrical leakage caused by the multiple memory subarray layers la directly contacting the substrate **81**. However, as above, the device performance of the lowermost memory subarray layer **1***a* in the memory device of the present disclosure is poor, and therefore, the memory cells in the lowermost memory subarray layer **1***a* are generally configured as dummy memory cells and do not participate in the actual memory work. Therefore, it is understood by those skilled in the art that the first single-crystal sacrificial semiconductor layer **82** may not be arranged on the substrate **81**, and a single memory subarray layer **1***a* or two common-source memory subarray layers **1***a* are formed directly on the substrate **81** as dummy memory cells, on which the second single-crystal sacrificial semiconductor layer **14** and two common-source memory subarray layers **1***a* are alternately formed by epitaxial growth until the uppermost layer of two common-source memory subarray layers **1***a* are formed. That is, the lowermost one memory subarray layer **1***a* or two common-source memory subarray layers **1***a*, as a dummy memory cell(s), does not participate in the actual memory work, and therefore, it can also prevent electrical leakage to the substrate **81**.

[0207] Two adjacent memory subarray layers **1***a* share a common source region, and each two common-source memory subarray layers may be formed in a manner including the following.

[0208] Step b1: forming a first single-crystal semiconductor layer of a first doping type by epitaxial growth on the first single-crystal sacrificial semiconductor layer **82** or the second single-crystal sacrificial semiconductor layer **14** of the lower layer.

[0209] Specifically, a semiconductor material gas and a first-type of dopant ion gas may be simultaneously introduced to form one layer of the first single-crystal semiconductor layer of the first doping type on the first single-crystal sacrificial semiconductor layer **82** or the second single-crystal sacrificial semiconductor layer **14** of the lower layer by epitaxial growth. The first single-crystal semiconductor layer serves as a drain region semiconductor layer **11***c* (or a source region semiconductor layer **13***c*). The first-type of dopant ion may be an arsenic ion. The semiconductor material may be an existing semiconductor material for forming the drain region (or source region).

[0210] Step b2: forming a second single-crystal semiconductor layer of a second doping type on the first single-crystal semiconductor layer by epitaxial growth.

[0211] Specifically, a semiconductor material gas and a second-type of dopant ion gas may be simultaneously fed to form one layer of the second single-crystal semiconductor layer of the second doping type on the first single-crystal semiconductor layer by epitaxial growth. The second single-crystal semiconductor layer serves as a channel semiconductor layer **12***c*'. The second-type of dopant ion may be a BF2+ ion. The semiconductor material may be an existing semiconductor material for forming a well region.

[0212] Step b3: forming a third single-crystal semiconductor layer of the first doping type on the second single-crystal semiconductor layer by epitaxial growth.

[0213] Specifically, a semiconductor material gas and a first-type of dopant ion gas may be simultaneously fed to form one layer of the third single-crystal semiconductor layer of the first doping type on the second single-crystal semiconductor layer by epitaxial growth. The third single-crystal semiconductor layer serves as a source region semiconductor layer **13***c* (or a drain region semiconductor layer **11***c*). The first-type of dopant ion may be an arsenic ion. The semiconductor material may be an existing semiconductor material for forming the source drain region (or drain region).

[0214] In a specific implementation of step S**212***a*, one layer of the second single-crystal sacrificial semiconductor layer **14** is further formed between every two memory subarray layers **1***a*. Each two adjacent memory subarray layers **1***a* separated by the second single-crystal sacrificial semiconductor layer **14** in the height direction Z includes sequentially stacked drain region semiconductor layer **11***c*, channel semiconductor layer **12***c*', source region semiconductor layer **13***c*, channel semiconductor layer **12***c*', and drain region semiconductor layer **11***c* to share the same source region semiconductor layer **13***c*.

[0215] Step b4: forming a fourth single-crystal semiconductor layer of a second doping type on the third single-crystal semiconductor layer by epitaxial growth.

[0216] This step b4 is performed in a similar manner to step b**2**. The fourth single-crystal semiconductor layer serve as the channel semiconductor layer **12***c*'.

[0217] Step b5: forming a fifth single-crystal semiconductor layer of a first doping type on the fourth single-crystal semiconductor layer by epitaxial growth.

[0218] This step b5 is performed in a similar manner as step b1. The fifth single-crystal semiconductor layer serve as the drain region semiconductor layer **11***c* (or source region semiconductor layer **13***c*).

[0219] The first single-crystal semiconductor layer, the second single-crystal semiconductor layer, and the third single-crystal semiconductor layer form a memory subarray layer **1***a*; the third single-crystal semiconductor layer, the fourth single-crystal semiconductor layer, and the fifth single-crystal semiconductor layer form another memory subarray layer **1***a*; and the two memory subarray layers **1***a* share the third single-crystal semiconductor layer as the shared source region semiconductor layer **13***c*.

[0220] It is understood that, in the embodiments, after step b5, one layer of the second single-crystal sacrificial semiconductor layer **14** is formed on the fifth single-crystal semiconductor layer, after which steps b1-b5 may be repeated on the second single-crystal sacrificial semiconductor layer **14** until a predetermined number of layers of the memory subarray layers **1***a* is formed.

[0221] That is, a second single-crystal sacrificial semiconductor layer **14** is formed between every two memory subarray layers **1***a*. Moreover, each adjacent two memory subarray layers **1***a* separated by the second single-crystal sacrificial semiconductor layer **14** in the height direction Z includes sequentially stacked drain region semiconductor layer **11***c*, channel semiconductor layer **12***c*', source region semiconductor layer **13***c*, channel semiconductor layer **12***c*', and drain region semiconductor layer **11***c* to share the same source region semiconductor layer **13***c*.

[0222] Step S**213***a*: forming a first hard mask layer **83** on the multiple memory subarray layers **1***a*, and defining multiple isolation wall holes **31** in the first hard mask layer **83** and the multiple memory subarray layers **1***a*, and filling the multiple isolation wall holes **31** with an isolation material to form multiple isolation walls **3** to form a semiconductor substrate.

[0223] The first hard mask layer **83** may be made of silicon dioxide or silicon nitride.

[0224] Specifically, referring to FIG. **19**, FIG. **19** is a top view of defining multiple isolation wall holes **31** in the memory subarray layers la. The multiple isolation wall holes **31** may be formed etching, and the isolation wall holes **31** are arranged in a matrix in the row direction X and the column direction Y, with each isolation wall hole **31** extending in the height direction Z to a surface of the substrate **81**. The specific structure of forming the isolation walls **3** in the isolation wall holes **31** can be seen in FIG. **20**, which is a top view of the multiple isolation walls **3** formed in the isolation wall holes **31** shown in FIG. **19**. Specifically, the isolation wall **3** near an edge of the memory device in the column direction Y extends further in the column direction Y to the edge of the memory device to ensure that the isolation wall **3** at the edge of the column direction Y can completely isolate two adjacent columns stacked structures **1***b*'. Specifically, in some embodiments, the isolation wall **3** near the edge of the memory device in the column direction Y is a T-shaped isolation wall **3**, i.e., the isolation wall **3** includes a lateral portion and a protruding portion toward the edge of the memory device in the column direction Y, and the protruding portion is in contact with the edge of the memory device in the column direction Y to completely isolate the two adjacent column stack structures **1***b*' to prevent a short circuit between the two columns of the drain region semiconductor strips **11**, the channel semiconductor strips **12**, and the source region semiconductor strips **13**. The isolation wall **3** and the first hard mask layer **83** may be made of the same material.

[0225] In other embodiments, step S**21** specifically includes the following operations.

[0226] Step S**211***b*: providing the substrate **81**.

[0227] Step S**212***b*: forming multiple isolation walls **3** on the substrate **81**, where the multiple isolation walls **3** are arranged in a matrix in the row direction X and the column direction Y, each isolation wall **3** extending along the height direction Z perpendicular to the substrate **81**.

[0228] Step S**213***b*: forming multiple memory subarray layers la sequentially on the substrate **81** and between the multiple isolation walls **3** along the height direction Z.

[0229] The specific implementation process of forming the multiple memory subarray layers **1***a* is the same or similar to the specific implementation process of forming the multiple memory subarray layers **1***a* in step S**212***a* above, and the same or similar technical effect can be achieved, as described above.

[0230] Step S**214***b*: forming a first hard mask layer **83** on the above structure to form the semiconductor substrate.

[0231] Specifically, the first hard mask layer **83** may be formed on the product structure after being processed by step S**213***b*, with the first hard mask layer **83** being disposed on a side surface of the multiple memory subarray layers **1***a* back from the substrate **81**.

[0232] At step S**22**: defining multiple word-line holes on the semiconductor substrate to divide each memory subarray layer into multiple columns of drain region semiconductor strips, channel semiconductor strips, and source region semiconductor strips along a row direction.

[0233] In some embodiments, step S**22** specifically includes the following.

[0234] Step S**221**: forming the multiple word-line openings **831** on the first hard mask layer **83**.

[0235] As shown in FIG. **21**, FIG. **21** is a top view of forming the multiple word-line openings **831** and word-line holes **4** on the semiconductor substrate. The multiple word-line openings **831** may be formed on the first hard mask layer **83** by etching. The multiple word-line openings **831** are arranged in a matrix in the row direction X and the column direction Y.

[0236] Step S**222**: etching the multiple memory subarray layers **1***a* under the first hard mask layer **83** to form multiple word-line holes **4**.

[0237] As shown in FIG. **21** to FIG. **23**, FIG. **22** is a cross-sectional view in the E-direction of the product corresponding to FIG. **21**; and FIG. **23** is a cross-sectional view in the F-direction of the product corresponding to FIG. **21**. Specifically, the word-line holes **4** may be formed by etching, and as shown in FIG. **21**, the multiple word-line holes **4** are spaced apart from the isolation walls **3**; and the multiple word-line holes **4** are arranged in a matrix in the row direction X and the column direction Y, and each memory subarray layer **1***a* is divided into multiple columns of drain region semiconductor strips **11**, channel semiconductor strips **12**, and source region semiconductor strips **13** along the row direction X. As shown in FIG. **22**, each word-line hole **4** extends along the height direction Z, and the left and right sides (such as the left and right sides in the orientation of FIG. **22**) of each word-line hole **4** at a non-edge position expose parts of two columns of drain region semiconductor strips **11**, channel semiconductor strips **12**, and source region semiconductor strips **13** of the multiple memory subarray layers **1***a*, respectively. Each word-line hole **4**'s both sides in the left-right direction are the drain region semiconductor strips **11**, channel semiconductor strips **12** and, source region semiconductor strips **13**; both sides in the front-rear direction are isolation walls **3**. In this step, an etchant with a high etch ratio for the semiconductor material and a low etch ratio for the isolation wall **3** may be applied to process the formation of the word-line holes **4**. In addition, as shown in FIG. **2** to FIG. **4**, the leftmost edge word-line holes **4** correspond to only one column of the drain region semiconductor strips **11**, channel semiconductor strips **12** and, source region semiconductor strips **13** on right side; similarly, the rightmost edge word-line holes **4** correspond to only one column of the drain region semiconductor strips **11**, channel semiconductor strips **12** and, source region semiconductor strips **13** on left

side. However, it is understood by those skilled in the art that the leftmost edge line holes **4** and the rightmost edge line holes **4** can be considered as a combination to form a complete word-line hole, and the differences in the edge word-line holes **4** will not be specifically noted subsequently.

[0238] As shown in FIG. **2** and FIG. **4**, the multiple word-line holes **4** together with the multiple isolation walls **3** divide the drain region semiconductor layer **11***c* in each memory subarray layer **1***a* into multiple drain region semiconductor strips **11** spaced at intervals along the row direction X; the channel semiconductor layer **12***c* into multiple channel semiconductor strips **12** spaced at intervals along the row direction X; and the source region semiconductor layer **13***c* into multiple source region semiconductor strips **13** spaced at intervals along the row direction X. The other specific structures and functions of each drain region semiconductor strip **11**, channel semiconductor strip **12**, and source region semiconductor strip **13** can be found in the above description and will not be repeated here. In addition, as shown in FIG. **23**, the interior of the isolation wall **3** may be silicon oxide with a layer of silicon nitride wrapped around the outside, and the silicon nitride wrapped around the outside may be the same as the material of the first hard mask layer **83**.

[0239] In a specific implementation, referring to FIG. **24***a* and FIG. **24***b*, FIG. **24***a* is a schematic view of the structure shown in FIG. **21** after being processed by step S**223**; FIG. **24***b* is a schematic view of the structure shown in FIG. **24***a* after being filled with the insulating material; after step S**222**, the method may further include the following.

[0240] Step S**223**: removing the first single-crystal sacrificial semiconductor layer **82** and the second single-crystal sacrificial semiconductor layer **14** through the word-line holes **4**.

[0241] Specifically, the first single-crystal sacrificial semiconductor layer **82** and the second single-crystal sacrificial semiconductor layer **14** may be removed by etching.

[0242] Step S**224**: depositing on regions where the removed first single-crystal sacrificial semiconductor layer **82** and the second single-crystal sacrificial semiconductor layer **14** were located to fill the regions with an insulating material, thereby replacing the first single-crystal sacrificial semiconductor layer **82** and the second single-crystal sacrificial semiconductor layer **14** with an insulating isolation layer **14'**.

[0243] The insulating material may be filled by means of atomic layer deposition. The insulating material may specifically be silicon oxide. It will be understood by those skilled in the art that after step S**223** removing the first single-crystal sacrificial semiconductor layer **82** and the second single-crystal sacrificial semiconductor layer **14**, the isolation walls **3** may provide sufficient support to the adjacent stacked structures **1***b*' to facilitate subsequent execution of step S**224**.

[0244] Further, it will be understood by those skilled in the art that in some embodiments, the memory array **1** further includes multiple support posts **16**. Specifically, referring to FIG. **25***a* and FIG. **25***b*. FIG. **25***a* is a schematic view of a perspective structure of a memory array according to an embodiment of the present disclosure; and FIG. **25***b* is a partial plan schematic view of a memory array according to an embodiment of the present disclosure.

[0245] As shown in FIG. **25***a* and FIG. **25***b*, the memory array **1** further includes multiple support posts **16**, each of which extends along the height direction Z of the memory array **1**.

[0246] As described above, the first single-crystal sacrificial semiconductor layer **82** and the second single-crystal sacrificial semiconductor layer **14** are required to be replaced with the insulating isolation layer **14'**. In this step, the first single-crystal sacrificial semiconductor layer **82** and the second single-crystal sacrificial semiconductor layer **14** are partially replaced with the insulating isolation layer **14'**, but in subsequent steps, all of the first single-crystal sacrificial semiconductor layer **82** and the second single-crystal sacrificial semiconductor layer **14** are replaced with the insulating isolation layer **14'** as required for electrical isolation. That is, during the manufacturing of the memory array **1**, after etching off the first single-crystal sacrificial semiconductor layer **82** and/or the second single-crystal sacrificial semiconductor layer **14**, the memory subarray layers **1***a* in the relevant regions are overhanging. In these relevant regions, when the isolation walls **3** are provided, the isolation walls **3** can provide sufficient support to the overhanging memory subarray layers la in these regions to prevent the memory subarray layers **1***a* from collapsing.

[0247] However, the isolation walls **3** may not present in some regions. For example, in a drain/source lead region, the memory subarray layers **1***a* in this region are not required to manufacture the memory cells, and the drain region semiconductor strips **11**, source region semiconductor strips **13**, and/or channel semiconductor strips **12** in the memory subarray layers **1***a* in this region are required to be led out to be connected with corresponding wires. Therefore, in these regions, multiple support posts **16** are required to be arranged between two columns of the stacked structures **1***b*'. In this way, after etching the first single-crystal sacrificial semiconductor layer **82** and/or the second single-crystal sacrificial semiconductor layer **14** in the stacked structures **1***b*' in these regions during the manufacturing of the memory array **1**, the support posts **16** can provide sufficient support to the overhanging memory subarray layers **1***a* to prevent the memory subarray layers **1***a* from collapsing, and support the frame of the memory array **1** and maintain the structural stability of the memory array **1**.

[0248] It will be understood by those skilled in the art that the support posts **16** may be made of the same material as the isolation wall **3** and manufactured in the same process steps as the isolation wall **3**. That is, the isolation wall **3** and the support post **16** are similar in nature, except that the isolation wall **3** is arranged in the region of the memory array **1** where the memory cells are required to be manufactured, and it serves to support and form the word-line holes **4** during the manufacturing of the memory array **1**; whereas the support post **16** is formed in another region of the memory array **1** where the memory cell is not required to be manufactured, for example, the drain/source lead region, and it serves to support the memory array **1** during the manufacturing process. Of course, in other embodiments, the support post **16** may be arranged in the region of the memory array **1** where the memory cells are required to be manufactured. For example, when the distance between two adjacent isolation walls **3** is far, and the isolation wall **3** does not provide sufficient support, then the support post **16** may be arranged in this region as needed to assist the isolation wall **3** to

provide support. That is, the support post **16** may be arranged according to the actual needs, which is not limited by the present disclosure.

[0249] The material of the support post **16** may be silicon oxide or silicon nitride.

[0250] Step S**23**: forming a storage structure on each of at least one side of a part of each word-line hole that exposes a corresponding drain region semiconductor strip, a corresponding channel semiconductor strip, and a corresponding source region semiconductor strip, where the storage structure is a charge trapping storage structure.

[0251] The product structure after processing by step S**23** can be seen specifically in FIG. **26**, which is a schematic view of the structure shown in FIG. **24***b* after processing by step S**23**. In some embodiments, step S**23** specifically includes the following.

[0252] Step S**231**: depositing a first dielectric layer on the semiconductor substrate defining the word-line holes **4**.

[0253] Specifically, one layer of the first dielectric layer is deposited within each word-line hole **4** and on a surface of the first hard mask layer **83** back from the substrate **81**. The first dielectric layer within each word-line hole **4** covers surfaces of the parts of the drain region semiconductor strips **11**, channel semiconductor strips **12**, and source region semiconductor strips **13** that are exposed on both sides of the word-line hole **4**. For example, in conjunction with FIG. **4**, parts of the first stacked structures **1***b*' and the second stacked structures **1***b*' are exposed through word-line hole **4** of the first row and the second column (hereinafter referred to as a first word-line hole **4**), the first dielectric layer in the first word-line hole **4** covers the part of the first column of semiconductor strip storage structures **1***b* exposed through the first word-line hole **4**, and the part of the second column of semiconductor strip structures **1***b* exposed through the first word-line hole **4**.

[0254] Step S**232**: depositing a charge storage layer on the first dielectric layer.

[0255] The charge storage layer is disposed on a side surface of the first dielectric layer back from a corresponding semiconductor strip structure **1***b*.

[0256] Step S**233**: depositing a second dielectric layer on the charge storage layer.

[0257] The second dielectric layer is disposed on a side surface of the charge storage layer back from the first dielectric layer.

[0258] At block S**24**: filling each of the word-line holes with a gate material to form multiple gate strips.

[0259] The product structure after processing by step S**24** is specified in FIG. **5** and FIG. **27**, where FIG. **27** is a schematic view of the structure shown in FIG. **26** after processing by step S**24**. As shown in FIG. **5**, a projection of at least a part of each gate strip **2** coincides with a projection of a part of a corresponding channel semiconductor strip **12** in each memory subarray layer **1***a* on a projection plane extending along the height direction Z and the column direction Y. A part of the gate strip **2**, a corresponding part of the channel semiconductor strip **12**, a part of the drain region semiconductor strip **11** adjacent to the corresponding part of the channel semiconductor strip **12**, a part of the source region semiconductor strip **13** adjacent to the corresponding part of the channel semiconductor strip **12**, and a part of the charge trapping storage structure form a memory cell.

[0260] As above, in the embodiments, the storage structure **5** is a charge trapping storage structure, such as an ONO type charge trapping storage structure, such that it can hold the electric charges injected into near the injection point. The electric charges can only move in the injection/removal direction (substantially perpendicular to the extension direction of the charge storage layer **52**), and cannot move freely in the charge storage layer **52**, especially not in the extension direction of the charge storage layer **52**. For the charge trapping storage structure, the charge storage layer **52** is only required to have an insulating dielectric arranged on its front and back side, and the charge stored in each memory cell will be fixed near the injection point of the charge storage portion and will not move to the charge storage portion in other memory cells along the same layer of the charge storage layer **52**. Therefore, in its corresponding manufacturing method, it is only necessary to form a first dielectric layer **51** and a second dielectric layer **53** on both sides of the charge storage layer **52**, respectively, to separate the charge storage layer **52** from the drain region semiconductor strip **11**, the channel semiconductor strip **12**, the source region semiconductor strip **13** and the gate strip **2**, and its manufacturing method is relatively simple.

[0261] Specifically, the above manufacturing method of memory devices may be configured to prepare the memory devices involved in the following embodiments. In conjunction with FIG. **1** to FIG. **4**, the memory device includes a memory array **1**, which includes multiple memory cells distributed in a three-dimensional array. The memory array **1** includes multiple stacked structures **1***b*' distributed along the row direction X, each stacked structure **1***b*' extending along the column direction Y, and each stacked structure **1***b*' includes drain region semiconductor strips **11**, channel semiconductor strips **12**, and source region semiconductor strips **13** stacked along the height direction Z. Each drain region semiconductor strip **11**, channel semiconductor strip **12**, and source region semiconductor strip **13** extends along the column direction Y, and each drain region semiconductor strip **11**, channel semiconductor strip **12**, and source region semiconductor strip **13** is a single-crystal semiconductor strip.

[0262] Multiple gate strips **2** are arranged on each of two sides of each stacked structure **1***b*' along the column direction Y, and each gate strip **2** extends along the height direction Z. In the height direction Z, a projection of at least a part of each gate strip **2** coincides with a projection of a part of a corresponding channel semiconductor strip **12** on a projection plane extending along the height direction Z and the column direction Y. A part of the gate strip **2**, a corresponding part of the channel semiconductor strip **12**, a part of the drain region semiconductor strip **11** adjacent to the corresponding part of the channel semiconductor strip **12**, and a part of the source region semiconductor strip **13** adjacent to the corresponding part of the channel semiconductor strip **12** form a memory cell. Specifically, a charge trapping storage structure is arranged between each gate strip **2** and corresponding drain region semiconductor strips **11**, channel semiconductor strips **12**, and source region semiconductor strips **13** in the multiple memory subarray layers **1***a*. The specific structure and function of the charge trapping storage structure, and the position relationship with the memory array **1**, etc., can be found in the relevant description above.

[0263] Specifically, each stacked structure **1***b*' includes multiple stacked substructures, each stacked substructure including a drain region semiconductor strip **11**, a channel semiconductor strip **12**, a source region semiconductor strip **13**, a channel semiconductor strip **12**, and a drain region semiconductor strip **11** stacked sequentially along the height direction Z to share the same source region semiconductor strip **13**. Specifically, an interlayer isolation layer is arranged between two adjacent stacked substructures (i.e., the above-mentioned insulating isolation layer **14'**) to isolate the two adjacent stacked substructures from each other.

[0264] Multiple isolation walls **3** distributed along the column direction Y are arranged on each side of each stacked structure **1***b*', and each isolation wall **3** extends along the height direction Z and the row direction X to separate at least part of the two adjacent columns of the stacked structures **1***b*'. The isolation walls **3** further serve as support structures to support the two adjacent columns of the stacked structures **1***b*' in the manufacturing process as shown above to facilitate the subsequent manufacturing process. Of course, after the manufacturing process, the isolation walls **3** may be further configured as support structures to support the two adjacent columns of the stacked structures **1***b*'. The isolation wall **3** near an edge of the memory device in the column direction Y is a T-shaped wall to completely isolate the two adjacent columns of the stacked structures **1***b*'. Of course, the isolation wall **3** at the edge in the column direction Y may take other shapes, such as extending in the column direction Y to the edge of the memory device in the column direction Y, etc., as long as it can completely isolate the two adjacent columns of the stacked structures **1***b*' at the edge of the memory device in the column direction Y.

[0265] In the column direction Y, a gate strip **2** is arranged between two adjacent isolation walls **3** on the same column; parts of two adjacent columns of the stacked structures **1***b* share the same gate strip **2**.

[0266] Other structures and functions of the memory device provided in the embodiments can be found in the specific description of the memory device provided in any of the above embodiments where the storage structure is a charge trapping storage structure, and will not be repeated herein.

[0267] The memory cell corresponding to the above manufacturing method includes: a drain region portion **11'**, a channel portion **12'**, a source region portion **13'**, and a gate portion **2'**. The drain region portion **11'**, the channel portion **12'**, and the source region portion **13'** are stacked along the height direction Z, and the gate portion **2'** is disposed on one side of the drain region portion **11'**, the channel portion **12'**, and the source region portion **13'**, and along the height direction Z. In the height direction Z, a projection of the gate portion **2'**at least partially coincides with a projection of the channel portion **12'**on a projection plane, the projection plane extending along the height direction Z and the drain region portion **11'**. A charge trapping storage structure portion is arranged between the gate portion **2'** and the drain region portion **11'**, the channel portion **12'**, and the source region portion **13'**.

[0268] The specific structure and position of the charge trapping storage structure portion can be found in the above description. Other structures and functions of the memory cell can be found in the description of the memory cell with the charge trapping storage structure portion **5'** involved in the above embodiments, which will not be repeated herein.

[0269] In other embodiments, referring FIG. **28**, FIG. **28** is a flowchart of a manufacturing method of a memory device according to another embodiment of the present disclosure. A storage structure of the memory device herein is a floating gate storage structure. Another manufacturing method of a memory device is provided, which may be configured to prepare the memory device corresponding to FIG. **9** to FIG. **11** above. The method specifically includes operations at blocks illustrated in FIG. **23**.

[0270] At step S**31**: providing a semiconductor substrate.

[0271] At step S**32**: forming multiple word-line holes on the semiconductor substrate to divide each memory subarray layer into multiple columns of drain region semiconductor strips, channel semiconductor strips, and source region semiconductor strips along a row direction.

[0272] The specific implementation process of step S**31**-step S**32** is the same or similar to the specific implementation process of step S**21**-step S**22** above, and can achieve the same or similar technical effect, as can be seen above, which will not be repeated herein.

[0273] It should be noted that the subsequent steps are the relevant steps after the first single-crystal sacrificial semiconductor layer **82** and the second single-crystal sacrificial semiconductor layer **14** are replaced by the insulating isolation layer **14'** using the word-line holes **4**. The relevant process steps of the embodiments are the same as the relevant process steps of the previous embodiments, and will not be repeated herein.

[0274] At step S**33**: forming a floating gate storage structure on at least one side of a part of each word-line hole that exposes corresponding channel semiconductor strips.

[0275] Step S**33** may specifically include the following.

[0276] Step S**331**: forming a first insulating dielectric layer **85***a* on at least one side of a part of each word-line hole **4** that exposes a corresponding drain region semiconductor strip **11**, channel semiconductor strip **12**, and source region semiconductor strip **13**.

[0277] In some embodiments, step S**331** specifically includes the following.

[0278] Step A: removing a part of the corresponding channel semiconductor strip **12** exposed by each word-line hole **4** to define a first recess **84**.

[0279] As shown in FIG. **29** and FIG. **30**, FIG. **29** is a schematic view of the structure shown in FIG. **24***b* defining the first recess **84**; FIG. **30** is a cross-sectional view of the product corresponding to FIG. **29** in another direction. Specifically, parts of the channel semiconductor strips **12** exposed on both sides of each word-line hole **4** may be removed by etching to define the first recesses **84**, for example by acid etching.

[0280] In the embodiments, etching may be performed using an etchant with a high etch ratio for the channel semiconductor strips **12** and the insulating isolation layers **14'**, and an etchant with a low etch ratio for the drain region semiconductor strips **11** and the source region semiconductor strips **13**. For example, when the drain region semiconductor strips **11** and the source region semiconductor strips **13** are N-type semiconductor strips, and the channel semiconductor strips **12** are P-type semiconductor strips, then an etchant with a high etch ratio for the P-type semiconductor and with a low etch ratio for the N-type semiconductor may be applied for selective etching, such that only the parts of the channel semiconductor strips **12** and the insulating

isolation layers **14'**exposed on both sides of the word-line hole **4** are etched, thereby defining the first recesses **84**.

[0281] It will be understood by those skilled in the art that when acid etching is performed on a part of the channel semiconductor strips **12**, the etchant etches a part of the insulating isolation layers **14'** while etching the part of the channel semiconductor strips **12**, defining third recesses **84***a*, as shown in FIG. **29**. Although this etching is unfavorable, the third recess **84***a* will be backfilled in subsequent steps, in particular with the same material as the insulating isolation layer **14'**.

[0282] Although in FIG. **29**, the third recesses **84***a* are formed by etching, in other embodiments, the third recesses **84***a* may not be necessarily defined formed when the etching selection ratio is well controlled.

[0283] Step B: filling the multiple first recesses **84** each with a first insulating dielectric **85**.

[0284] As shown in FIG. **31** and FIG. **32**, FIG. **31** is a schematic view of the formation of the first insulating dielectric **85** on the structure shown in FIG. **29**; FIG. **32** is a cross-sectional view in the F-direction of the product corresponding to FIG. **31**. Specifically, the first insulating dielectric **85** may be filled in the first recesses **84** by deposition. The third recesses **84***a* may be also filled with the first insulating dielectric **85** by means of deposition. The first insulating dielectric **85** may be the same material as the insulating layer **14'**, e.g., silicon oxide.

[0285] When the first recesses **84** are filled with the first insulating dielectric **85**, the third recesses **84***a*, formed by etching off parts of the insulating layers **14'**, are also filled with the first insulating dielectric **85**. Since the material of the first insulating dielectric **85** is silicon oxide, which is the same material as the insulating isolation layers **14'**, the device performance will not be affected.

[0286] In some embodiments, referring to FIG. **33** to FIG. **35**, FIG. **33** is a schematic view of the structure shown in FIG. **31** after defining the second recesses **84'**; FIG. **34** is a cross-sectional view of the F-direction of the product corresponding to FIG. **33**; and FIG. **35** is a schematic view of the structure shown in FIG. **33** after forming a second insulating dielectric **86**. After step B, the method may further include the following.

[0287] Step C: removing parts of corresponding drain region semiconductor strips **11** and parts of corresponding source region semiconductor strips **13** exposed on both sides of each word-line hole **4** to define multiple second recesses **84'**; where each second recess **84'** exposes at least a part of a corresponding first insulating dielectric **85**.

[0288] The second recesses **84'** may be defined by etching. A vertical cross-sectional view of the product after removing the parts of the drain region semiconductor strips **11** and the parts of the source region semiconductor strips **13** exposed on both sides of each word-line hole **4** to define the multiple second recesses **84'** can be seen in FIG. **33**. Specifically, in this step, an etchant with a low etch ratio for the channel semiconductor strips **12** and with a high etch ratio for the drain region semiconductor strips **11** and source region semiconductor strips **13** may be applied. For example, when the drain region semiconductor strip **11** and the source region semiconductor strip **13** are N-type semiconductor strips, and the channel semiconductor strip **12** is P-type semiconductor strip, an etchant with a high etch ratio for the N-type semiconductor and with a low etch ratio for the P-type semiconductor may be applied for selective etching, such that only the parts of the drain region semiconductor strips **11** and the parts of the source region semiconductor strips **13** exposed on both sides of the exposed line hole **4** are etched to define the second recesses **84'**.

[0289] Step D: forming a second insulating dielectric **86** in each second recess **84'**.

[0290] The second insulating dielectric **86** may be formed by deposition. The second insulating dielectric **86** may be made of silicon nitride. After step D, step E is performed.

[0291] Step E: removing the first insulating dielectric **85** in the first recesses **84** to empty the first recesses **84**, and depositing a first insulating dielectric layer **85***a* on walls of the corresponding first recesses **84**.

[0292] As shown in FIG. **36***a* and FIG. **36***b*, FIG. **36***a* is a schematic view of the structure after removing the first insulating dielectric **85** in the first recesses **84**; FIG. **36***b* is a schematic view of the structure shown in FIG. **35** forming the first insulating dielectric layer **85***a*. In this step, etching may be performed using an etchant with a high etch ratio for the first insulating dielectric **85** and with a low etch ratio for the second insulating dielectric **86**, e.g., an etchant with a high etch ratio for silicon oxide and with a low etch ratio for silicon nitride. Further, by controlling the amount of etchant, etch speed, and etch time to etch off the first insulating dielectric **85**. Thereafter, a first insulating dielectric layer **85***a* is formed by deposition or growth in the first recesses **84** where the first insulating dielectric **85** was etched off; the first insulating dielectric layer **85***a* has a gate-shaped (U-shaped) cross-section for defining a floating gate slot.

[0293] Step S**332**: forming a floating gate **54** on a side surface of a part of the first insulating dielectric layer **85***a* back from a corresponding channel semiconductor strip **12**.

[0294] The structure of the product after step S**332** can be seen in FIG. **37** and FIG. **38**. FIG. **37** is a schematic view of the structure shown in FIG. **36***b* forming the floating gates **54**; FIG. **38** is a cross-sectional view of the product corresponding to FIG. **37** in another direction.

[0295] Specifically, a floating gate material may be deposited in the floating gate slots to form the floating gate **54**, and the floating gate material may include polycrystalline silicon material.

[0296] Step S**333**: forming a second insulating dielectric layer **85***b* on a side wall of each word-line hole, and the second insulating dielectric layer **85***b* cooperates with the first insulating dielectric layer **85***a* to wrap any surface of each floating gate **54**.

[0297] In some embodiments, referring to FIG. **39***a*, FIG. **39***a* is a schematic view of the structure after removing a part of the first hard mask layer around each word-line hole and a part of the second insulating dielectric in each second recess. Step S**333** may specifically include the following.

[0298] Step **3331**: removing a part of the first hard mask layer **83** around each word-line hole **4** and a part of the second insulating dielectric **86** in each second recess **84'**, to widen the word-line hole **4** and expose at least a part of each floating gate **54**.

[0299] It will be understood that after step **3331**, the first insulating dielectric layer **85***a* wraps only a part of the floating gate **54**.

[0300] As shown in FIG. **39***b* and FIG. **40**, FIG. **39***b* is a schematic view of the second insulating dielectric layer **85***b*; FIG. **40** is a cross-sectional view of the F-direction of the product corresponding to FIG. **39***b*.

[0301] Step **3332**: forming the second insulating dielectric layer **85***b* on the side wall of each of widened word-line hole **4** such that the second insulating dielectric layer **85***b* wraps around an exposed portion of each floating gate **54**.

[0302] As can be seen in FIG. **39***b*, the first insulating dielectric layer **85***a* and the second insulating dielectric layer **85***b* completely wrap and isolate various surfaces of the floating gates **54**. The second insulating dielectric layer **85***b* includes a multilayer structure including a silicon oxide layer, a silicon nitride layer, and another silicon oxide layer. By widening the word-line hole **4**, it is ensured that the second insulating dielectric layer **85***b* partially covers each of five surfaces of the floating gate **54**. In this way, the second insulating dielectric layer **85***b* and the first insulating dielectric layer **85***a* can wrap any surface of the floating gate **54**. Specifically, as shown in FIG. **39***b*, a part of the second insulating dielectric layer **85***b* covers the five surfaces of each floating gate **54**, where four of each five surfaces of the floating gate **54** are at least partially covered by the part of the second insulating dielectric layer **85***b* and the remaining one of the five surfaces is fully covered by the second insulating dielectric layer **85***b*. Further, the first insulating dielectric layer **85***a*, in addition to covering the surface of the floating gate **54** near the channel semiconductor strip **12**, also covers parts of the other four surfaces of the floating gate **54**. Therefore, the first insulating dielectric layer **85***a*, in conjunction with the second insulating dielectric layer **85***b*, may wrap all surfaces of the floating gates **54**.

[0303] Step S**34**: filling the gate material in each word-line hole to form the gate strips.

[0304] The structure of the product after step S**34** can be seen in FIG. **41** and FIG. **42**, FIG. **41** is a schematic view of the formation of gate strips **2**; FIG. **42** is a cross-sectional view of the product corresponding to FIG. **41** in another direction. The gate strip **2** wraps all other surfaces of the floating gate **54** other than those wrapped by the first insulating dielectric layer **85***a* to improve the coupling rate. That is, a surface of the gate strip **2** extends in the extension direction of the second insulating dielectric layer **85***b*, thereby sandwiching the second insulating dielectric layer **85***b* and wrapping the five surfaces of the floating gate **54**, and four of the five surfaces of the floating gate **54** are at least partially wrapped by the gate strip **2** through the second insulating dielectric layer **85***b*. The specific structure of each memory cell in the memory device produced by this manufacturing method can be seen in FIG. **10**.

[0305] A projection of at least a part of each gate strip **2** coincides with a projection of a part of a corresponding channel semiconductor strip **12** in each memory subarray layer **1***a* on a projection plane, the projection plane extending along the height direction Z and the column direction Y. A part of the gate strip **2**, a corresponding part of the channel semiconductor strip **12**, a part of the drain region semiconductor strip **11** adjacent to the corresponding part of the channel semiconductor strip **12**, a part of the source region semiconductor strip **13** adjacent to the corresponding part of the channel semiconductor strip **12**, and a part of a corresponding floating gate storage structure, form a memory cell.

[0306] In the embodiments, the storage structure **5** is a floating gate storage structure, as above, and the floating gate storage structure is characterized by the fact that the charge injected in can be uniformly distributed in the entire floating gate **54**, and the charges can move not only in the injection/removal direction (substantially perpendicular to the extension direction of the floating gate), but also in the floating gate **54**, particularly in the extension direction of the floating gate **54**. Therefore, in the floating gate storage structure, the floating gate **54** of each memory cell is independent, and each surface of each floating gate **54** is required to be covered by an insulating dielectric to be isolated from each other, thereby preventing the charges stored in the floating gates **54** in one memory cell from moving to the floating gates **54** in other memory cells. Therefore, in the manufacturing method thereof, the floating gate **54** of each memory cell is independent, and the insulating dielectric formed by the first insulating dielectric layer **85***a* and the second insulating dielectric layer **85***b* can completely wrap and isolate the various surfaces of the floating gates **54**, such that the floating gates **54** of each memory cell are independent and the charge stored in each floating gate **54** cannot move to the floating gates **54** of other memory cells.

[0307] Specifically, the manufacturing method may be configured to prepare the memory device involved in the following embodiments. The memory device includes a memory array **1**, which includes multiple memory cells distributed in a three-dimensional array. The memory array **1** includes multiple stacked structures **1***b*' distributed along the row direction X, each stacked structure **1***b*' extending along the column direction Y, and each stacked structure **1***b*' includes drain region semiconductor strips **11**, channel semiconductor strips **12**, and source region semiconductor strips **13** stacked along the height direction Z. Each drain region semiconductor strip **11**, channel semiconductor strip **12**, and source region semiconductor strip **13** extends along the column direction Y, and each drain region semiconductor strip **11**, channel semiconductor strip **12**, and source region semiconductor strip **13** is a single-crystal semiconductor strip.

[0308] Multiple gate strips **2** are arranged on each of two sides of each stacked structure **1***b*' along the column direction Y, and each gate strip **2** extends along the height direction Z. In the height direction Z, a projection of at least a part of each gate strip **2** coincides with a projection of a part of a corresponding channel semiconductor strip **12** on a projection plane extending along the height direction Z and the column direction Y. A part of the gate strip **2**, a corresponding part of the channel semiconductor strip **12**, a part of the drain region semiconductor strip **11** adjacent to the corresponding part of the channel semiconductor strip **12**, and a part of the source region semiconductor strip **13** adjacent to the corresponding part of the channel semiconductor strip **12** form a memory cell. Specifically, a floating gate storage structure is arranged between each gate strip **2** and corresponding drain region semiconductor strips **11**, channel semiconductor strips **12**, and source region semiconductor strips **13** in the multiple memory subarray layers **1***a*. The floating gate storage structure includes multiple first insulating dielectric layers **85***a*, multiple floating gates **54**, and the second insulating dielectric layer **85***b*. Each first insulating dielectric layer **85***a* is disposed between at least a corresponding channel semiconductor strip **12** and a corresponding floating gate **54**, the floating gate **54** is located disposed a corresponding first insulating dielectric layer **85***a* and the second insulating dielectric layer **85***b*, and the second dielectric layer **85***b* is disposed between the floating gates **54** and the gate strip **2**.

[0309] Specifically, each stacked structure **1***b*' includes multiple stacked substructures, each stacked substructure including a drain region semiconductor strip **11**, a channel semiconductor strip **12**, a source region semiconductor strip **13**, a channel semiconductor strip **12**, and a drain region semiconductor strip **11** stacked sequentially along the height direction Z to share the same source region semiconductor strip **13**. Specifically, an interlayer isolation layer is arranged between two adjacent stacked substructures to isolate the two adjacent stacked substructures from each other.

[0310] Multiple isolation walls **3** distributed along the column direction Y are arranged on each side of each stacked structure **1***b*', and each isolation wall **3** extends along the height direction Z and the row direction X to separate at least part of the two adjacent columns of the stacked structures **1***b*'. The isolation walls **3** further serve as support structures to support the two adjacent columns of the stacked structures **1***b*'. The isolation wall **3** near an edge of the memory device in the column direction Y is a T-shaped wall to completely isolate the two adjacent columns of the stacked structures **1***b*'.

[0311] In the column direction Y, a gate strip **2** is arranged between two adjacent isolation walls **3** on the same column; parts of two adjacent columns of the stacked structures **1***b*' share the same gate strip **2**.

[0312] Other structures and functions of the memory device provided in the embodiments can be found in the specific description of the memory device provided in any of the above embodiments where the storage structure is a floating gate storage structure, and will not be repeated herein.

[0313] The memory cell corresponding to the above manufacturing method includes: a drain region portion **11'**, a channel portion **12'**, a source region portion **13'**, and a gate portion **2'**. The drain region portion **11'**, the channel portion **12'**, and the source region portion **13'** are stacked along the height direction Z, and the gate portion **2'** is disposed on one side of the drain region portion **11'**, the channel portion **12'**, and the source region portion **13'**, and along the height direction Z. In the height direction Z, a projection of the gate portion **2'** and a projection the channel portion **12'** on a projection plane extending along the height direction Z at least partially coincide, the projection plane being located on a side of the drain region portion **11'**, the channel portion **12'**, and the source region portion **13'** and extending along the height direction Z and the column direction Y. A floating gate storage structure portions arranged between the gate portion **2'** and the drain region portion **11'**, the channel portion **12'**, and the source region portion **13'**.

[0314] The floating gate storage structure portion specifically includes a corresponding first insulating dielectric layer **85***a*, a corresponding floating gate **54**, and a part of the second insulating dielectric layer **85***b*. The first insulating dielectric layer **85***a* is disposed between the channel portion **12'** and the floating gate **54**, the floating gate **54** is disposed between the first insulating dielectric layer **85***a* and the part of the second insulating dielectric layer **85***b*, and the part of the second insulating dielectric layer **85***b* is disposed between the floating gate **54** and the gate strip **2**. The part of the second insulating dielectric layer **85***b* covers five surfaces of the floating gate **54**. One of the five surfaces of the floating gate **54** is fully covered by the second insulating dielectric layer **85***b*. The part of the second insulating dielectric layer **85***b* includes a multilayer structure including a part of a silicon oxide layer, a part of a silicon nitride layer, and a part of another silicon oxide layer.

[0315] Other structures and functions of the memory cell can be found in the description of the memory cell for which the storage structure portion **5'** is a floating gate storage structure portion involved in the above-described embodiments, and will not be repeated herein.

[0316] As shown in FIG. **1** to FIG. **45**, FIG. **43***a* is a perspective structural schematic view of a memory array according to another embodiment of the present disclosure; FIG. **43***b* is a schematic sketch of a plan view of a memory device corresponding to the memory array shown in FIG. **43***a*; FIG. **44***a* and FIG. **44***b* are distribution schematic views of channel connection posts according to an embodiment of the present disclosure; FIG. **45** is a cross-sectional view along G-direction of a product corresponding to FIG. **43***b*. In some embodiments, another memory device is provided. The difference between this memory device and the memory device provided in any embodiments mentioned above is that: in this memory device, the channel semiconductor strips **12** in the memory arrays **1** are not led out to the surface of the memory arrays **1** through the well region connection lines **12***a* (as shown in FIG. **12**) connected to the channel semiconductor strips **12**.

[0317] Specifically, as shown in FIG. **43***a* to FIG. **45**, each memory array **1** of the memory device further includes a channel connection structure. The channel connection structure extends along the height direction Z. The channel connection structure is in contact with each channel semiconductor strip **12** in each column of semiconductor strip structures **1***b*, so that each channel semiconductor strip **12** in the column of semiconductor strip structures **1***b* may be led out to the surface of the memory array **1** through the channel connection structure. Further, the channel connection structure is insulated from each drain region semiconductor strip **11** and each source region semiconductor strip **13** in each column of semiconductor strip structures **1***b* to prevent short-circuits. Each channel semiconductor strip **12** may be led out to the surface of the memory array **1** through the channel connection structure. The channel semiconductor strip refers to a channel semiconductor strip of an effective memory cell in the memory array **1**, excluding a channel semiconductor strip serves as a dummy memory cell or a channel semiconductor strip of other memory cells without storage functions.

[0318] In some embodiments, the channel connection structure includes multiple channel connection posts **91**. At least one side of each column of semiconductor strip structures **1***b* is arranged with a corresponding channel connection post **91**. The channel connection posts **91** extend respectively along the height direction Z. At least a portion of the channel connection post **91** is in contact with each channel semiconductor strip **12** in an adjacent semiconductor strip structures **1***b*, so that each channel semiconductor strip **12** in the column of semiconductor strip structures **1***b* may be led out to the surface of the memory array **1** through the channel connection post **91**. In some embodiments, each of the channel connection posts **91** may be respectively connected to an independent well region voltage line to apply a well region voltage to each channel semiconductor strip **12**. Of course, all channel connection posts **91** may also be respectively connected to the same common well region line to uniformly apply a well region voltage to all channel semiconductor strips **12** in the memory array **1** through the

common well region line. Further, the channel connection post **91** is insulated from each drain region semiconductor strip **11** and each source region semiconductor strip **13** in the adjacent column of semiconductor strip structures **1***b* to prevent short-circuits.

[0319] Compared with the scheme in which the channel semiconductor strips **12** in each column of semiconductor strip structures **1***b* are respectively led out to the surface of the memory array **1** through the well region connection line **12***a*, the above-mentioned scheme of the present disclosure only needs one channel connection post **91** to lead out all the channel semiconductor strips **12** in the column of semiconductor strip structures **1***b*, which greatly reduces areas occupied by the channel connection posts **91** on the surface of the memory array **1**, and reduces the process difficulty and cost.

[0320] In specific embodiments, in conjunction with FIG. **45**, each drain region semiconductor strip **11** and source region semiconductor strip **13** in each column of semiconductor strip structures **1***b* are spaced apart from an adjacent channel connection post **91**. A first insulating material **92** is filled between each drain region semiconductor strip **11** and each source region semiconductor strip **13** in each column of semiconductor strip **1***b* and a corresponding adjacent channel connection post **91**, so that the channel connection post **91** is insulated from each drain region semiconductor strip **11** and source region semiconductor strip **13** in each adjacent column of semiconductor strip structures **1***b*. The first insulating material **92** may be silicon oxide.

[0321] As shown in FIG. **43***a* or FIG. **43***b*, corresponding channel connection posts **91** may be arranged on two sides of each column of semiconductor strip structures **1***b* respectively, and two adjacent columns of semiconductor strip structures **1***b* share a corresponding same channel connection post **91**.

[0322] In some embodiments, as shown in FIG. **44***a*, a corresponding channel connection post **91** is arranged on each odd column of semiconductor strip structures **1***b* at a same side (such as the left side) thereof. In this way, from left to right, a first column of channel semiconductor strip structures **1***b* may be applied with a well region voltage through a first channel connection post **91**; a second and a third columns of channel semiconductor strip structures **1***b* may be both applied with a well region voltage through a second channel connection post **91**; a fourth and a fifth columns of channel semiconductor strip structures **1***b* may be both applied with a well region voltage through a third channel connection post **91**.

[0323] Alternatively, as shown in FIG. **44***b*, a corresponding channel connection post **91** is arranged on each even column of semiconductor strip structures **1***b* at a same side (such as the left side) thereof. In this way, from left to right, a first and a second columns of channel semiconductor strip structures **1***b* may be both applied with a well region voltage through a first channel connection post **91**; a third and a fourth columns of channel semiconductor strip structures **1***b* may be both applied with a well region voltage through a second channel connection post **91**.

[0324] In conjunction with FIG. **44***b*, the multiple channel connection posts **91** are distributed in a straight line along the row direction X. Of course, the multiple channel connection posts **91** may also be arranged in a staggered manner along the row direction X, such as in a zigzag distribution.

[0325] In some embodiments, an end of each of the channel connection posts **91** away from the substrate **81** is exposed through the multiple memory subarray layers. The ends of the channel connection posts **91** are connected together through a common connection structure, so as to be uniformly applied a well region voltage through the common connection structure.

[0326] In some embodiments, as shown in FIG. **46***a* to FIG. **47**, FIG. **46***a* and FIG. **46***b* are perspective structural schematic views of a memory array **1** according to another embodiment of the present disclosure; FIG. **47** is a schematic sketch of a plan view of a memory device corresponding to the memory array shown in FIG. **46***b*. As shown in FIG. **46***a*, the channel connection structure includes a channel connection wall **93**. The channel connection wall **93** is arranged at a position of an end edge of the semiconductor strip structures **1***b* of a corresponding memory array **1**, and extends along the height direction Z and the row direction X. The channel connection wall **93** is in contact with each channel semiconductor strip **12** in each column of semiconductor strip structures **1***b*, so that each channel semiconductor strip **12** in the column of semiconductor strip structures **1***b* may be led out to the surface of the memory array **1** through the channel connection wall **93**. Further, the channel connection wall **93** is insulated from each drain region semiconductor strip **12** and each source region semiconductor strip **13** in the column of semiconductor strip structures **1***b* to prevent short-circuits.

[0327] In specific embodiments, each drain region semiconductor strip **11** and source region semiconductor strip **13** in each column of semiconductor strip structures **1***b* are spaced apart from an adjacent channel connection wall **93**. The first insulating material **92** is filled between each drain region semiconductor strip **11** and each source region semiconductor strip **13** in each column of semiconductor strip structures **1***b* and the corresponding adjacent channel connection wall **93**, so that the channel connection wall **93** is insulated from each drain region semiconductor strip **11** and each source region semiconductor strip **13** in each adjacent column of semiconductor strip structures **1***b*. The first insulating material **92** may be silicon oxide.

[0328] In specific embodiments, as shown in FIG. **46***b*, the channel connection structure includes multiple channel connection posts **91** and a channel connection wall **93**. Specifically, each of the channel connection posts **91** may be connected to the channel connection wall **93**, making the multiple channel connection posts **91** to be connected together through the channel connection wall **93**. In some embodiments, the common well region line may be specifically connected to the channel connection wall **93** to uniformly apply a well region voltage to all the channel semiconductor strips **12** in the memory device.

[0329] As shown in FIG. **46***b*, along the column direction Y, corresponding channel connection posts **91** are arranged on both sides of the end of the column of semiconductor strip structures **1***b* respectively. The channel connection post **91** extends along the column direction Y to the position of the end edge of the column of semiconductor strip structures **1***b*. The channel connection wall **93** is arranged at the position of the end edge of the column of semiconductor strip structures **1***b*, extends along the height direction Z and the row direction X, and is in contact with all the channel connection posts **91**, thereby connecting all the channel connection posts **91** in the memory array **1** together. The channel connection posts **91** and the channel connection wall **93** may be integrally formed, and the process is simple.

[0330] Of course, those skilled in the art can understand that each of the channel connection posts **91** in the memory array **1** may also be independent of each other to respectively apply a well region voltage to the channel semiconductor strips **12** in each column of semiconductor strip structures **1***b*. For example, similar to the above, an end of each of the channel connection posts **91** away from the substrate **81** serves as a well region connection terminal, which is configured to receive a separate well region voltage.

[0331] Specifically, the channel connection posts **91** and/or the channel connection wall **93** are made of a conductive material. Materials of the channel connection posts **91** and/or the channel connection wall **93** include polysilicon and/or metal. In some embodiments, the materials of the channel connection posts **91** and/or the channel connection wall **93** include polysilicon. In some embodiments, as shown in FIG. **45**, each memory array **1** further includes a connection layer **94**. The connection layer **94** is arranged on surfaces of sides of the channel connection posts **91** and/or the channel connection wall **93** away from the substrate **81**. An electrical conductivity of the connection layer **94** is better than an electrical conductivity of the channel connection posts **91** and/or the channel connection wall **93**. In some embodiments, a separate well region line or a common well region line may be specifically connected to the connection layer **94** to apply a well region voltage to the channel semiconductor strips **12**. The connection layer **94** with better electrical conductivity is used to connect with the well region line in the above-mentioned embodiments, because the impedance of the connection layer **94** is smaller, more time is saved during signal transmission, making the response speed of the memory device faster.

[0332] Specifically, a material of the connection layer **94** includes a metal silicide.

[0333] As shown in FIG. **48**, FIG. **48** is a partial top view of a memory device according to an embodiment of the present disclosure. In some embodiments, a number of the memory arrays **1** in the memory device is multiple. The channel connection structure in each memory array **1** is located at the position of the end edge of the memory array **1**, so that during the manufacturing process, the channel connection structures of two memory arrays **1** may be produced simultaneously, and then separated by subsequent processes. A second insulating material **95** is filled between two adjacent memory arrays **1** to isolate the channel connection structures between the two adjacent memory arrays **1**. A material of the second insulating material **95** may also be silicon oxide. The channel connection structure includes the channel connection posts **91** and/or the channel connection wall **93**.

[0334] Of course, in other embodiments, the channel connection wall **93** and/or the channel connection posts **91** may also be arranged in a middle position of each memory array **1**. Those skilled in the art can understand that during the manufacturing process of the channel connection structure corresponding to some embodiments, the channel connection structure corresponding to each memory array **1** needs to be produced separately.

[0335] In specific embodiments, each memory array **1** includes multiple channel connection posts **91** and a channel connection wall **93**. The multiple channel connection posts **91** are respectively in contact with the channel connection wall **93**. The channel connection wall **93** is located at an end edge of the memory array **1**, and extends along the height direction Z and the row direction X. The second insulating material **95** is specifically filled between the channel connection structures of two adjacent memory arrays **1**. Further, as shown in FIG. **48**, the second insulating material **95** also surrounds other surfaces of the memory array **1**, and the second insulating material **95** on each surface extends along the height direction Z and the column direction Y or the row direction X.

[0336] The memory device provided in some embodiments is provided with the substrate **81**, at least one memory array **1** is arranged on the substrate **81**, and each memory array **1** includes multiple memory subarray layers **1***a* sequentially stacked along the height direction Z. Each memory subarray layer **1***a* includes the drain region semiconductor layer, the channel semiconductor layer, and the source region semiconductor layer stacked along the height direction Z. In each memory subarray layer **1***a*, the drain region semiconductor layer includes multiple drain region semiconductor strips **11** spaced apart along the row direction X, the channel semiconductor layer include multiple channel semiconductor strips **12** spaced apart along the row direction X, and the source region semiconductor layer include multiple source region semiconductor strips **13** spaced apart along the row direction X. Each drain region semiconductor strip **11**, channel semiconductor strip **12**, and source region semiconductor strip **13** extends along the column direction Y. The column of drain region semiconductor strips **11**, channel semiconductor strips **12**, and source region semiconductor strips **13** in multiple memory subarray layers **1***a* is defined as the column of semiconductor strip structures **1***b*. Compared with a two-dimensional memory device, the storage density of the memory device is higher. In addition, each memory array **1** further includes the channel connection structure. The channel connection structure extends along the height direction Z. The channel connection structure is in contact with each channel semiconductor strip **12** in each column of semiconductor strip structures **1***b*, so that each channel semiconductor strip **12** in the column of semiconductor strip structures **1***b* may be led out to the surface of the memory array **1** through the channel connection structure. The channel connection structure is insulated from each drain region semiconductor strip **11** and each source region semiconductor strip **13** to prevent short-circuits. Compared with the scheme in which each channel semiconductor strip **12** in each column of semiconductor strip structures **1***b* is respectively led out to the surface of the memory array **1** through the well region connection line **12***a*, this scheme only needs the channel connection structure to lead out all the channel semiconductor strips **12** in the column of semiconductor strip structures **1***b*, which greatly reduces the area occupied by the channel connection structure on the surface of the memory array **1**, and reduces the process difficulty and cost.

[0337] As shown in FIG. **49**, FIG. **49** is a flowchart of a manufacturing method of a memory device according to further another embodiment of the present disclosure. In some embodiments, a manufacturing method of a memory device is provided, which may be configured to produce the memory device provided in FIG. **43***a* to FIG. **48** of the above-mentioned embodiments. The method specifically includes operations at blocks illustrated in FIG. **49**.

[0338] Step S**41**: providing a semiconductor substrate. The semiconductor substrate includes a substrate and mul-

tiple memory subarray layers stacked in sequence in the height direction on the substrate. Each memory subarray layer includes a drain region semiconductor layer, a channel semiconductor layer, and a source region semiconductor layer stacked in the height direction. In each memory subarray layer, the drain region semiconductor layer, the channel semiconductor layer, and the source region semiconductor layer respectively include multiple drain region semiconductor strips, multiple channel semiconductor strips, and multiple source region semiconductor strips spaced apart along a row direction. Each of the drain region semiconductor strips, each of the channel semiconductor strips, and each of the source region semiconductor strips extending along the row direction respectively. A column of drain region semiconductor strips, channel semiconductor strips, and source region semiconductor strips in multiple memory subarray layers is defined as a column of semiconductor strip structures.

[0339] As shown in FIG. **50** and FIG. **51**, FIG. **50** is a top view of the semiconductor substrate according to an embodiment of the present disclosure; FIG. **51** is a cross-sectional view along G-direction of a product shown in FIG. **50**. The semiconductor substrate includes the substrate **81**, a first single-crystal sacrificial semiconductor layer **82** arranged on the substrate **81**, multiple memory subarray layers **1***a* and second single-crystal sacrificial semiconductor layers **14** alternately formed on the first single-crystal sacrificial semiconductor layer **82**, and a first hard mask layer **83** arranged on a surface of a side of the second single-crystal sacrificial semiconductor layer **14** away from the substrate **81**. Two common-source memory subarray layers **1***a* may be alternately arranged with the second single-crystal sacrificial semiconductor layer **14** to achieve a higher storage density, or one memory subarray layer **1***a* may be alternately arranged with the second single-crystal sacrificial semiconductor layer **14**.

[0340] The multiple memory subarray layers **1***a* are stacked in sequence along the height direction Z perpendicular to the substrate **81**. Each memory subarray layer **1***a* includes the drain region semiconductor layer, the channel semiconductor layer, and the source region semiconductor layer stacked along the height direction Z. In each memory subarray layer **1***a*, the drain region semiconductor layer include multiple drain region semiconductor strips **11** spaced apart along the row direction X, the channel semiconductor layer includes multiple channel semiconductor strips **12** spaced apart along the row direction X, and the source region semiconductor layer includes multiple source region semiconductor strips **13** spaced apart along the row direction X. Each drain region semiconductor strip **11**, channel semiconductor strip **12**, and source region semiconductor strip **13** extends along the column direction Y. A column of drain region semiconductor strips **11**, channel semiconductor strips **12**, and source region semiconductor strips **14** in multiple memory subarray layers is defined as the column of semiconductor strip structures **1***b*. Multiple gate strips **2** spaced apart along the column direction Y are arranged between two adjacent columns of drain region semiconductor strips **11**, channel semiconductor strips **12**, and source region semiconductor strips **13**, and each gate strip **2** extends along the height direction Z.

[0341] The semiconductor substrate is also arranged with multiple isolation walls **3** and multiple gate strips **2**. The isolation walls **3** and the gate strips **2** respectively extend along the height direction Z to the surface of the substrate **81**. For the other specific structures and manufacturing methods of the semiconductor substrate, please refer to the relevant descriptions in the specific structures and manufacturing methods of the memory device provided in any of the above-mentioned embodiments, and details will not be repeated here.

[0342] Step S**42**: defining a connection hole in the semiconductor substrate.

[0343] As shown in FIG. **52** and FIG. **53**, FIG. **52** is a top view of the semiconductor substrate shown in FIG. **50** after defining the connection hole; FIG. **53** is a cross-sectional view along G-direction of a product shown in FIG. **52**. The connection hole may be defined in the semiconductor substrate at positions different from the gate strips **2** and the isolation walls **3** by means of etching. In some embodiments, the connection hole includes first-type connection holes **96**. The first-type connection holes **96**, in cooperation with the gate strips **2** and the isolation walls **3**, divide each memory subarray layer **1***a* into multiple columns of drain region semiconductor strips **11**, channel semiconductor strips **12**, and source region semiconductor strips **13**.

[0344] Specifically, each first-type connection hole **96** extends along the height direction Z to the surface of the substrate **81**. Each first-type connection hole **96** exposes parts of each drain region semiconductor strip **11**, channel semiconductor strip **12**, and source region semiconductor strip **13** in an adjacent semiconductor strip structures **1***b*. The first-type connection holes **96** are configured to form the channel connection posts **91**.

[0345] Step S**43**: forming a channel connection structure through the connection hole. The channel connection structure extends along the height direction, and the channel connection structure is in contact with each channel semiconductor strip in each column of semiconductor strip structures and is insulated from each drain region semiconductor strip and each source region semiconductor strip in each column of semiconductor strip structures.

[0346] As shown in FIG. **54** to FIG. **59**, FIG. **54** to FIG. **59** are schematic views of structures at specific operations of forming the channel connection posts **91** through the first-type connection holes **96**. Step S**43** specifically includes the following operations.

[0347] Step S**431**: removing the first single-crystal sacrificial semiconductor layer **82** and the second single-crystal sacrificial semiconductor layers **14** through the first-type connection holes **96**.

[0348] Specifically, as shown in FIG. **54**, the first single-crystal sacrificial semiconductor layer **82** and the second single-crystal sacrificial semiconductor layers **14** may be removed by means of etching.

[0349] Step S**432**: filling a third insulating material in areas where the first single-crystal sacrificial semiconductor layer **82** and the second single-crystal sacrificial semiconductor layers **14** have been removed.

[0350] Specifically, as shown in FIG. **55**, deposition may be carried out in the areas where the removed first single-crystal sacrificial semiconductor layer **82** and second single-crystal sacrificial semiconductor layers **14** were originally located, so as to fill the third insulating material in the areas where the removed first single-crystal sacrificial semiconductor layer **82** and second single-crystal sacrificial semiconductor layers **14** were originally located, thereby replacing the first single-crystal sacrificial semiconductor layer **82**

and the second single-crystal sacrificial semiconductor layers **14** with an insulating isolation layer. It can be understood that a part of the insulating isolation layer corresponding to each column of semiconductor strip structures **1***b* is the interlayer isolation strip **14***a* mentioned above.

[0351] The third insulating material may be filled by means of atomic layer deposition. The third insulating material may specifically be silicon oxide. Those skilled in the art can understand that after the first single-crystal sacrificial semiconductor layer **82** and the second single-crystal sacrificial semiconductor layers **14** are removed in step S**431**, the isolation walls **3** may provide sufficient support for the adjacent stacked structures, so as to facilitate the subsequent operation of step S**432**.

[0352] Step S**433**: removing parts of the drain region semiconductor strips **11** and the source region semiconductor strips **13** on both sides exposed by each first-type connection hole **96** to form isolation recesses **97**.

[0353] In combination with FIG. **56**, the isolation recesses **97** may be formed by means of etching. Specifically, an etching process with a low etching ratio for the channel semiconductor strips **12** and a high etching ratio for the drain region semiconductor strips **11** and the source region semiconductor strips **13** may be used for etching. For example, in the case the drain region semiconductor strips **11** and the source region semiconductor strips **13** are N-type semiconductor strips, and the channel semiconductor strips **12** are P-type semiconductor strips, an etching process with a high etching ratio for the N-type semiconductor material and a low etching ratio for the P-type semiconductor material may be used for selective etching, so that only the parts of the drain region semiconductor strips **11** and the source region semiconductor strips **13** on both sides exposed by each first-type connection hole **96** are etched to form the isolation recesses **97**.

[0354] Step S**434**: filling the first insulating material **92** in the isolation recesses **97** to cover the exposed drain region semiconductor strips **11** and source region semiconductor strips **13**.

[0355] As shown in FIG. **57**, the first insulating material **92** may be filled in the first-type connection holes **96** by means of deposition to cover the exposed drain region semiconductor strips **11**, source region semiconductor strips **13**, side walls of the first-type connection holes **96**, an upper surface of the semiconductor substrate, and a surface of the substrate **81** exposed through the first-type connection holes **96**. Then, as shown in FIG. **58**, the first insulating material **92** on the upper surface of the semiconductor substrate and the side walls of the first-type connection holes **96** is removed, and each channel semiconductor strip **12** is exposed through the first-type connection holes **96**. The first insulating material **92** on the surface of the substrate **81** exposed through the first-type connection holes **96** may not be removed or only partially removed, so that the channel connection posts **91** formed subsequently are insulated from the substrate **81** through the first insulating material **92**. Of course, the channel connection posts **91** and the substrate **81** may also be set to have opposite conductivity types. For example, in the case the substrate **81** is N-type doped, the channel connection posts **91** are P-type doped. It can be understood that the first insulating material **92** on the surface of the substrate **81** exposed through the first-type connection holes **96** may be selectively removed entirely or partially. The first insulating material **92** is silicon oxide.

[0356] Since the interlayer isolation strips **14***a* and the first insulating material **92** are made of the same material, after the first single-crystal sacrificial semiconductor layer **82** and the second single-crystal sacrificial semiconductor layers **14** are removed, the isolation recesses **97** may be formed, and then silicon oxide may be deposited to form the interlayer isolation strips **14***a* in the areas where the first single-crystal sacrificial semiconductor layer **82** and the second single-crystal sacrificial semiconductor layers **14** were removed, and the first insulating material **92** may be filled in the isolation recesses **97**. In this way, one deposition process may be reduced, and the interlayer isolation strips **14***a* and the first insulating material **92** may be formed simultaneously.

[0357] Step S**435**: filling a first conductive medium **99** in the first-type connection holes **96** to form the channel connection posts **91** in contact with the channel semiconductor strips **12**.

[0358] As shown in FIG. **43***a* and FIG. **59**, the first conductive medium **99** is filled in the entire first-type connection holes **96** and is in contact with each channel semiconductor strip **12** in the two adjacent columns of semiconductor strip structures **1***b* respectively, thereby forming the channel connection posts **91**. Through the channel connection posts **91**, each channel semiconductor strip **12** in the two adjacent columns of semiconductor strip structures **1***b* is led out to the surface of the semiconductor substrate. The first conductive medium **99** includes polysilicon and/or metal.

[0359] In specific embodiments, at least one side of each column of semiconductor strip structures **1***b* is arranged with a corresponding channel connection post **91**. The channel connection posts **91** respectively extend along the height direction Z. At least part of the channel connection post **91** is in contact with each channel semiconductor strip **12** in the adjacent semiconductor strip structures **1***b*, so that each channel semiconductor strip **12** in the column of semiconductor strip structures **1***b* may be led out to the surface of the memory array **1** through the channel connection post **91**. The channel connection post **91** is insulated from each drain region semiconductor strip **11** and each source region semiconductor strip **13** to prevent short-circuits. Compared with the scheme in which each channel semiconductor strip **12** in each column of semiconductor strip structures **1***b* is led out to the surface of the memory array **1** through the well-region connection line **12***a*, this scheme only needs one channel connection post **91** to lead out all the channel semiconductor strips **12** in the column of semiconductor strip structures **1***b*, which greatly reduces the area occupied by the channel connection posts **91** on the surface of the memory array **1** and reduces the process difficulty and cost.

[0360] In other embodiments, as shown in FIG. **60** to FIG. **61**, FIG. **60** is a schematic view of the semiconductor substrate after defining second-type connection holes **98**; FIG. **61** is a cross-sectional view along a K-direction of the product shown in FIG. **60**. The connection hole defined in step S**42** includes multiple second-type connection holes **98**. The second-type connection holes **98** extend along the height direction Z and the row direction X to the surface of the substrate **81**. The second-type connection holes **98** may be configured to divide the multiple memory subarray layers into multiple memory arrays **1** spaced apart along the column direction Y, and to form the channel connection wall **93** of each memory array **1**. Each second-type connection

hole **98** exposes the positions of the end edge of each drain region semiconductor strip **11**, channel semiconductor strip **12**, and source region semiconductor strip **13** in the adjacent memory array **2**. The second-type connection holes **98** are configured to form the channel connection walls **93**. The manufacturing method of the channel connection wall **93** is similar to the manufacturing method of the channel connection post **91** mentioned above. The difference is that the positions of the first-type connection holes **96** and the second-type connection holes **98** are different, and the number of the channel connection wall **93** and the number of the channel connection posts **93** for each memory array **1** are also different.

[0361] In some embodiments, as shown in FIG. **62** to FIG. **72**, FIG. **62** to FIG. **72** are schematic views of structures at specific operations of step S**43**. Step S**43** specifically includes the following operations.

[0362] Step S**436**: removing the first single-crystal sacrificial semiconductor layer **82** and the second single-crystal sacrificial semiconductor layers **14** through the second-type connection holes **98**.

[0363] The product after step S**436** may be shown in FIG. **62**.

[0364] Step S**437**: filling the third insulating material in the areas where the first single-crystal sacrificial semiconductor layer **82** and the second single-crystal sacrificial semiconductor layers **14** have been removed.

[0365] The product after step S**437** may be shown in FIG. **63**.

[0366] Step S**438**: removing parts of the positions of the end edge of each drain region semiconductor strip **11** and source region semiconductor strip **13** in the two adjacent memory arrays **2** exposed through the second-type connection hole **98** to form isolation recesses **97**.

[0367] The product after step S**438** may be shown in FIG. **64**.

[0368] Step S**439**: filling the first insulating material **92** in the isolation recesses **97** to cover the exposed drain region semiconductor strips **11** and source region semiconductor strips **13**.

[0369] The product after step S**439** may be shown in FIG. **65**. Then, as shown in FIG. **66**, all or part of the first insulating material **92** exposed on the surface of the substrate **81** through the second-type connection hole **98** is removed.

[0370] Step S**440**: filling the first conductive medium **99** in the second-type connection hole **98**.

[0371] The product after step S**440** may be shown in FIG. **67**. The top view of the product corresponding to FIG. **67** is shown in FIG. **68**.

[0372] The specific implementation of step $**436** to step S**440** mentioned above is similar to the specific implementation of step S**431** to step S**435** mentioned above. For details, please refer to the above content.

[0373] Further, as shown in FIG. **69** and FIG. **70**, FIG. **69** is a schematic view of a product after removing part of the first conductive medium **99** in the second-type connection hole **98**; FIG. **70** is a cross-sectional view along the K-direction of the product shown in FIG. **69**. After step S**440**, the method further includes the following operation.

[0374] Step S**441**: removing part of the first conductive medium **99** in the second-type connection hole **98** along the column direction Y to form the channel connection wall **93** on each memory array **1** of the two adjacent memory arrays **1**.

[0375] The channel connection wall **93** is disposed at the position of the end edge of each memory array **1**, and extends along the height direction Z and the row direction X.

[0376] In combination with FIG. **71** to FIG. **72**, FIG. **71** is a top view of a semiconductor substrate after filling the second insulating material **95** in a gap between two adjacent memory arrays **1**; FIG. **72** is a cross-sectional view along the K-direction of the product shown in FIG. **70**. After step S**441**, the method further includes the following operation.

[0377] Step S**442**: filling the second insulating material **95** at least in the gap between two adjacent memory arrays **1**.

[0378] Specifically, the second insulating material **95** extends along the height direction Z to the surface of the substrate **81**, and extends along the row direction X to completely isolate the channel connection walls **93** on two adjacent memory arrays **1**. Further, as shown in FIG. **48**, the second insulating material **95** may also be filled on other exposed surfaces of each memory array **1**, so that the second insulating material **95** also surrounds other surfaces of the memory array **1**. The second insulating material **95** on each surface extends along the height direction Z and the column direction Y or the row direction X.

[0379] Of course, in other embodiments, as shown in FIG. **73**, FIG. **73** is a top view of a semiconductor substrate after defining the first-type connection holes **96** and the second-type connection hole **98**. The connection hole includes the first-type connection holes **96** and the second-type connection hole **98**. In some embodiments, step S**431** and step S**436** may be carried out simultaneously; step S**432** and step S**437** may be carried out simultaneously; step S**433** and step S**438** may be carried out simultaneously; step S**434** and step S**439** may be carried out simultaneously; step S**435** and step S**440** may be carried out simultaneously. As shown in FIG. **74**, while filling the first-type connection holes **96**, the second-type connection hole **98** are filled synchronously, which simplifies the process and reduces the cost. As shown in FIG. **75**, the first conductive medium **99** filled in the first-type connection holes **96** is configured to form the channel connection posts **91**, and the first conductive medium **99** filled in the second-type connection hole **98** is configured to form the channel connection walls **93**. It can be understood that since the first-type connection holes **96** corresponding to each memory array **1** are communicated with an adjacent second-type connection hole **98**, the channel connection posts **91** formed in the first-type connection holes **96** are respectively in contact with the channel connection wall **93** formed in the second-type connection hole **98**. Thus, a well region voltage may be uniformly applied to each channel semiconductor strip **12** through multiple channel connection posts **91** via the channel connection wall **93**.

[0380] In the present disclosure, the semiconductor substrate is divided into multiple memory arrays **1** through the second-type connection holes **98**, and multiple channel connection posts **91** and/or channel connection wall **93** are formed on each memory array **1**. Compared with the scheme where multiple channel connection posts **91** and/or channel connection wall **93** corresponding to one memory array **1** are shared by the entire semiconductor substrate, this scheme may reduce parasitic capacitance and make the operation speed faster.

[0381] Specifically, the first conductive medium includes polysilicon and/or metal. In some embodiments, the first conductive medium includes polysilicon. In specific embodiments, as shown in FIG. **45**, after the channel connection posts **91** and/or channel connection wall **93** are formed, the method further includes the following operation.

[0382] Step S**443**: arranging a second conductive medium on the surfaces of the channel connection posts **91** and/or the channel connection wall **93** away from the substrate **81** to form a connection layer **94**.

[0383] Specifically, the connection layer **94** may be formed by deposition. The electrical conductivity of the second conductive medium is better than the electrical conductivity of the first conductive medium **99**. The connection layer **94** with better electrical conductivity is used, and since the impedance of the connection layer **94** is smaller, more time is saved during signal transmission, making the response speed of the memory device faster. The second conductive medium may include a silicide containing metal.

[0384] Specifically, step S**443** may be executed at any stage after forming the channel connection posts **91** and/or the channel connection wall **93**. The present disclosure does not limit this.

[0385] The manufacturing method of the memory device provided in some embodiments is provided with the semiconductor substrate. The semiconductor substrate includes the substrate **81** and multiple memory subarray layers **1***a* stacked in sequence along the height direction Z on the substrate **81**. Each memory subarray layer **1***a* includes a drain region semiconductor layer, a channel semiconductor layer, and a source region semiconductor layer stacked along the height direction Z. In each memory subarray layer **1***a*, the drain region semiconductor layer includes multiple drain region semiconductor strips **11** spaced apart along the row direction X, the channel semiconductor layer include multiple channel semiconductor strips **12** spaced apart along the row direction X, and the source region semiconductor layer include multiple source region semiconductor strips **13** spaced apart along the row direction X. Each drain region semiconductor strip **11**, channel semiconductor strip **12**, and source region semiconductor strip **13** extends along the column direction Y. The column of drain region semiconductor strips **11**, channel semiconductor strips **12**, and source region semiconductor strips **13** in multiple memory subarray layers la is defined as the column of semiconductor strip structures **1***b*. Compared with a two-dimensional memory device, the storage density of the memory device is higher. The connection hole is defined in the semiconductor substrate. The channel connection structure is formed in the connection hole. The channel connection structure extends along the height direction Z. At least part of the channel connection structure is in contact with each channel semiconductor strip **12** in the adjacent semiconductor strip structures **1***b*, so that each channel semiconductor strip **12** in the column of semiconductor strip structures **1***b* may be led out to the surface of the memory array **1** through the channel connection structure. The channel connection structure is not in contact with each drain region semiconductor strip **11** and each source region semiconductor strip **13** to prevent short-circuits. Compared with the scheme in which each channel semiconductor strip **12** in each column of semiconductor strip structures **1***b* is respectively led out to the surface of the memory array **1** through the well region connection line **12***a*, this scheme only needs the channel connection structure to lead out all the channel semiconductor strips **12** in the column of semiconductor strip structures **1***b*, which greatly reduces the area occupied by the channel connection structure on the surface of the memory array **1**, and reduces the process difficulty and cost.

[0386] The above is only some embodiments of the present disclosure, and is not intended to limit the scope of the present disclosure. Any equivalent structure or equivalent process transformation using the contents and the accompanying drawings of the present disclosure, or any direct or indirect application in other related technical fields, is included in the scope of the present disclosure.

1. A memory device, comprising:

a substrate;

at least one memory array, arranged on the substrate, wherein each memory array comprises a plurality of memory subarray layers sequentially stacked along a height direction, and each memory subarray layer comprises a drain region semiconductor layer, a channel semiconductor layer, and a source region semiconductor layer stacked along the height direction; in each memory subarray layer, the drain region semiconductor layer comprises a plurality of drain region semiconductor strips spaced apart along a row direction, each drain region semiconductor strip extending along the row direction; the channel semiconductor layer comprises a plurality of channel semiconductor strips spaced apart along the row direction, each channel semiconductor strip extending along a column direction; the source region semiconductor layer comprises a plurality of source region semiconductor strips spaced apart along the row direction, each source region semiconductor strip extending along the column direction; a column of drain region semiconductor strips, channel semiconductor strips, and source region semiconductor strips in the memory subarray layers is defined as a column of semiconductor strip structures;

each memory array further comprises a channel connection structure, the channel connection structure extends along the height direction, and the channel connection structure is in contact with each channel semiconductor strip in each column of semiconductor strip structures, and is insulated from each drain region semiconductor strip and each source region semiconductor strip in each column of semiconductor strip structures.

2. The memory device according to claim **1**, wherein

the channel connection structure comprises a plurality of channel connection posts; at least one side of each column of semiconductor strip structures is arranged with a corresponding channel connection post; each of the channel connection posts extends along the height direction, and at least a portion of each of the channel connection posts is in contact with each channel semiconductor strip in an adjacent column of semiconductor strip structures, and is insulated from each drain region semiconductor strip and each source region semiconductor strip in the adjacent column of semiconductor strip structures; and/or

the channel connection structure comprises a channel connection wall; the channel connection wall extends along the height direction and the row direction, and the channel connection wall is in contact with each channel semiconductor strip in each column of semiconductor

strip structures, and is insulated from each drain region semiconductor strip and each source region semiconductor strip in each column of semiconductor strip structures.

3. The memory device according to claim **2**, wherein two sides of each column of semiconductor strip structures are arranged with corresponding channel connection posts respectively, and two adjacent columns of semiconductor strip structures share a corresponding same channel connection post.

4. The memory device according to claim **2**, wherein each of the channel connection posts is connected to the channel connection wall respectively, so that the plurality of channel connection posts are connected together through the channel connection wall.

5. The memory device according to claim **2**, wherein in the column direction, both two sides of an end of each column of semiconductor strip structures are arranged with corresponding channel connection posts respectively, and each of the channel connection posts extends along the column direction to a position of an end edge of a corresponding column of semiconductor strip structures; the channel connection wall is arranged at the position of the end edge of each column of semiconductor strip structures, and extends along the height direction and the row direction and is in contact with the plurality of channel connection posts, for connecting the plurality of channel connection posts together.

6. The memory device according to claim **4**, wherein the channel connection posts and the channel connection wall are integrally formed.

7. The memory device according to claim **2**, wherein

each odd column of semiconductor strip structures is arranged with a corresponding channel connection post at a same side thereof; or

each even column of semiconductor strip structures is arranged with a corresponding channel connection post at a same side thereof.

8. The memory device according to claim **1**, wherein a material of the channel connection structure comprises polysilicon;

each memory array further comprises:

a connection layer, arranged on a surface of a side of the channel connection structure away from the substrate; an electrical conductivity of the connection layer is better than an electrical conductivity of the channel connection structure.

9. The memory device according to claim **8**, wherein a material of the connection layer comprises a metal silicide.

10. The memory device according to claim **1**, wherein each drain region semiconductor strip and each source region semiconductor strip in each column of semiconductor strip structures are spaced apart from an adjacent channel connection structure; and a first insulating material is filled between each drain region semiconductor strip and each source region semiconductor strip in each column of semiconductor strip structures and the adjacent channel connection structure to achieve insulation through the first insulating material.

11. The memory device according to claim **1**, wherein a number of the memory arrays is multiple; the channel connection structure in each memory array is located at a position of an end edge of the memory array, and a second insulating material is filled between two adjacent memory arrays to isolate the channel connection structure between the two adjacent memory arrays.

12. The memory device according to claim **2**, wherein the plurality of channel connection posts are distributed in a straight line along the row direction; or the plurality of channel connection posts are staggered along the row direction.

13. A manufacturing method of a memory device, comprising:

providing a semiconductor substrate, wherein the semiconductor substrate comprises a substrate and a plurality of memory subarray layers arranged on the substrate and sequentially stacked in a height direction, and each memory subarray layer comprises a drain region semiconductor layer, a channel semiconductor layer, and a source region semiconductor layer stacked along the height direction; in each memory subarray layer, the drain region semiconductor layer comprises a plurality of drain region semiconductor strips spaced apart along a row direction, each drain region semiconductor strip extending along the row direction; the channel semiconductor layer comprises a plurality of channel semiconductor strips spaced apart along the row direction, each channel semiconductor strip extending along a column direction; the source region semiconductor layer comprises a plurality of source region semiconductor strips spaced apart along the row direction, each source region semiconductor strip extending along the column direction; a column of drain region semiconductor strips, channel semiconductor strips, and source region semiconductor strips in the memory subarray layers are defined as a column of semiconductor strip structures;

defining a connection hole on the semiconductor substrate;

forming a channel connection structure through the connection hole, wherein the channel connection structure extends along the height direction, and the channel connection structure is in contact with each channel semiconductor strip in each column of semiconductor strip structures, and is insulated from each drain region semiconductor strip and each source region semiconductor strip in each column of semiconductor strip structures.

14. The method according to claim **13**, wherein

the connection hole comprises a plurality of first-type connection holes, each of the first-type connection holes extends to the substrate along the height direction, and each of the first-type connection holes exposes a portion of each drain region semiconductor strip, channel semiconductor strip, and source region semiconductor strip in an adjacent column of semiconductor strip structures, so as to form a plurality of channel connection posts; at least one side of each column of semiconductor strip structures is arranged with a corresponding channel connection post;

the channel connection posts extend along the height direction, and at least a portion of a channel connection post is in contact with each channel semiconductor strip in the adjacent column of semiconductor strip structures, and is insulated from each drain region semiconductor strip and each source region semiconductor strip; and/or

the connection hole comprises a second-type connection hole, the second-type connection hole extends to the substrate along the height direction and the row direction, and is configured to form a channel connection wall of each memory array; the second-type connection hole exposes a position of an end edge of each drain region semiconductor strip, channel semiconductor strip, and source region semiconductor strip in an adjacent memory array; the channel connection wall extends along the height direction and the row direction, and the channel connection wall is in contact with each channel semiconductor strip in each column of semiconductor strip structures, and is insulated from each drain region semiconductor strip and each source region semiconductor strip in each column of semiconductor strip structures.

15. The method according to claim **14**, wherein the forming a channel connection structure through the connection hole, comprises:

removing parts of the drain region semiconductor strips and the source region semiconductor strips exposed through each of the first-type connection holes and/or the second-type connection hole to form isolation recesses;

filling the isolation recesses with a first insulating material to cover the exposed drain region semiconductor strips and the exposed source region semiconductor strips;

filling a first conductive medium in each of the first-type connection holes and/or the second-type connection hole to form each of the channel connection posts and/or the channel connection wall in contact with the channel semiconductor strips.

16. The method according to claim **15**, further comprising:

removing a portion of the first conductive medium in the second-type connection hole along the column direction to form the channel connection wall on each of two adjacent memory arrays; wherein the channel connection wall is arranged at the position of the end edge of each memory array and extends along the height direction and the row direction.

17. The method according to claim **16**, wherein further comprising:

filling a second insulating material in at least a gap between the two adjacent memory arrays.

18. The method according to claim **15**, wherein the first conductive medium comprises polysilicon;

the method further comprises:

disposing a second conductive medium on surfaces of the channel connection posts and/or the channel connection wall away from the substrate to form a connection layer; wherein an electrical conductivity of the second conductive medium is better than an electrical conductivity of the first conductive medium.

19. The method according to claim **14**, wherein the first-type connection holes and the second-type connection hole are formed simultaneously and filled with a first conductive material to simultaneously form the channel connection posts and the channel connection wall.

20. The method according to claim **18**, wherein the second conductive medium comprises a silicide containing a metal.

* * * * *