US 20250277982A1

(19) United States
(12) Patent Application Publication
KUSAFUKA et al.
(10) Pub. No.: US 2025/0277982 A1
(43) Pub. Date: Sep. 4, 2025

(54) **DISPLAY DEVICE, IMAGING DEVICE, DISPLAY SYSTEM, AND VEHICLE**

(71) Applicant: **KYOCERA Corporation**, Kyoto-shi (JP)

(72) Inventors: **Kaoru KUSAFUKA**, Kyoto-shi (JP); **Akinori SATOU**, Kyoto-shi (JP); **Kazumasa MATSUDA**, Kyoto-shi (JP); **Takashi SHIMADA**, Kyoto-shi (JP)

(21) Appl. No.: **19/209,490**

(22) Filed: **May 15, 2025**

Related U.S. Application Data

(63) Continuation of application No. PCT/JP2024/040045, filed on Nov. 11, 2024.

(30) **Foreign Application Priority Data**

Nov. 10, 2023	(JP)	2023-192609
May 10, 2024	(JP)	2024-077602
Jun. 12, 2024	(JP)	2024-095459

Publication Classification

(51) **Int. Cl.**

G02B 27/01	(2006.01)
G02B 5/08	(2006.01)
G02B 5/30	(2006.01)

(52) **U.S. Cl.**

CPC ***G02B 27/0172*** (2013.01); *G02B 5/0816* (2013.01); *G02B 5/3083* (2013.01)

(57) **ABSTRACT**

A display device includes a display panel, a first retarder, a semitransmissive mirror, a second retarder, and a reflective polarizer. The display panel emits display light. The first retarder faces the display panel. The second retarder is spaced from the first retarder. The reflective polarizer faces the second retarder to transmit first polarized light and reflect second polarized light. The semitransmissive mirror is between the first retarder and the second retarder and includes a reflective surface facing the second retarder. The first retarder and the second retarder convert the display light to the first polarized light and the second polarized light.

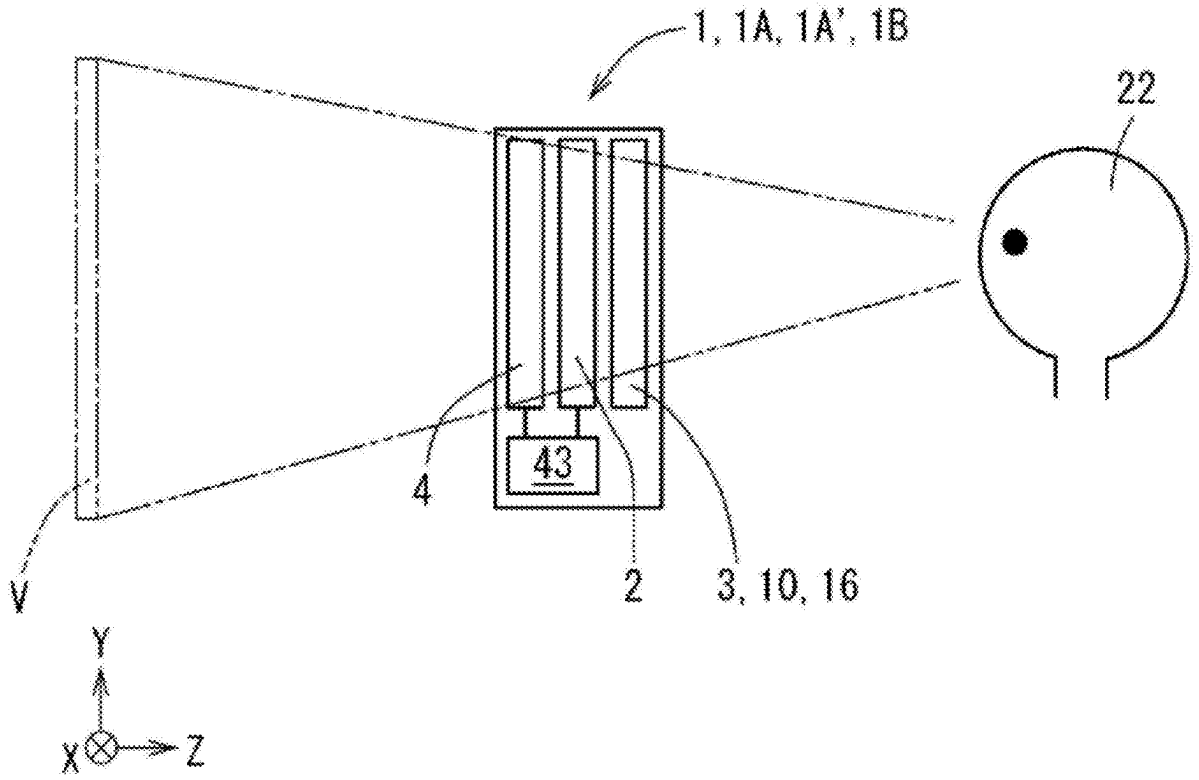

FIG. 1

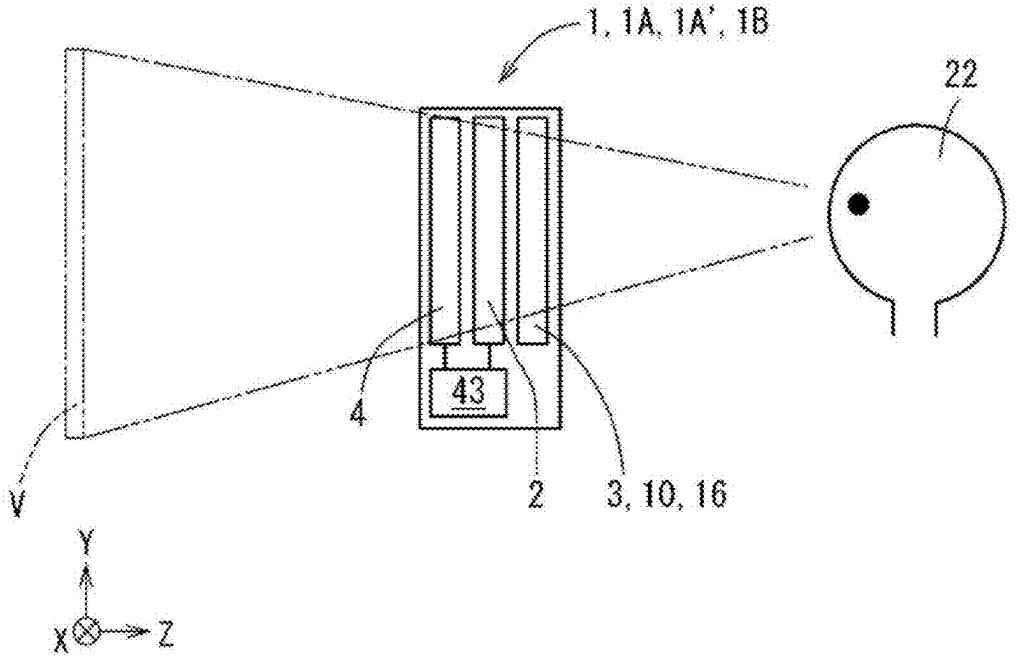
1, 1A, 1A', 1B
22
43
4
2
3, 10, 16
V
Y
X
Z

FIG. 2

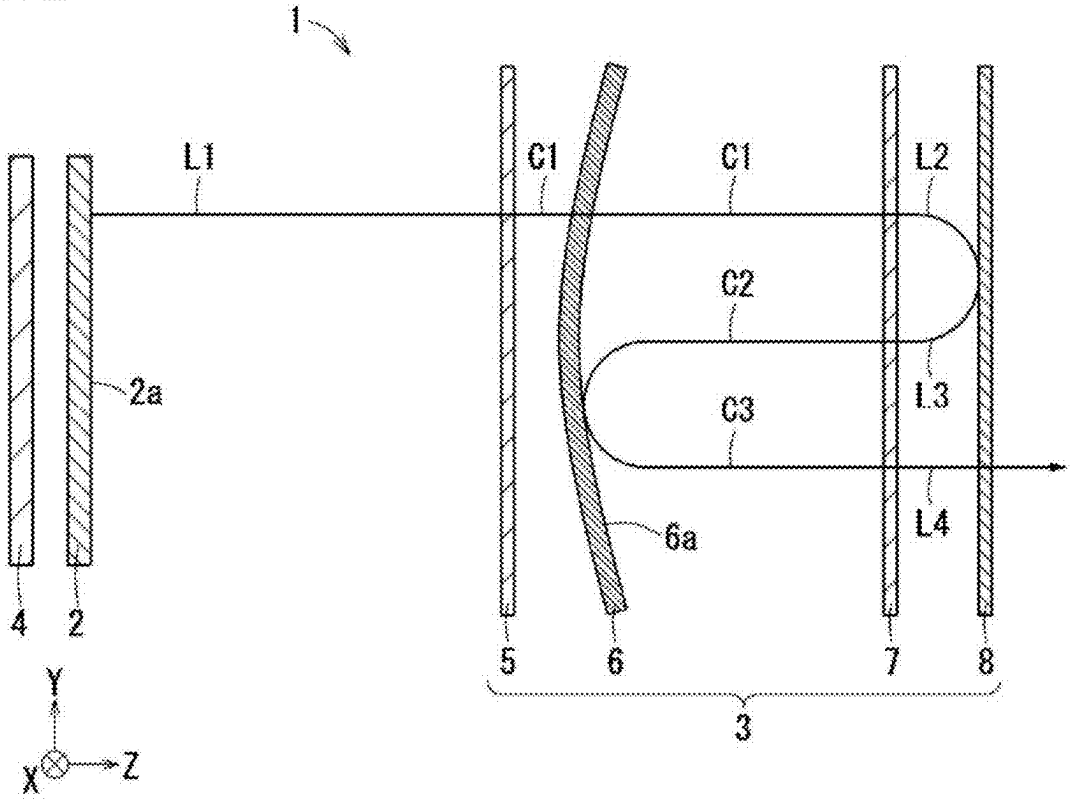
1
L1
C1
C1
L2
C2
2a
C3
L3
L4
6a
4
2
5
6
7
8
3
Y
X
Z

FIG. 3

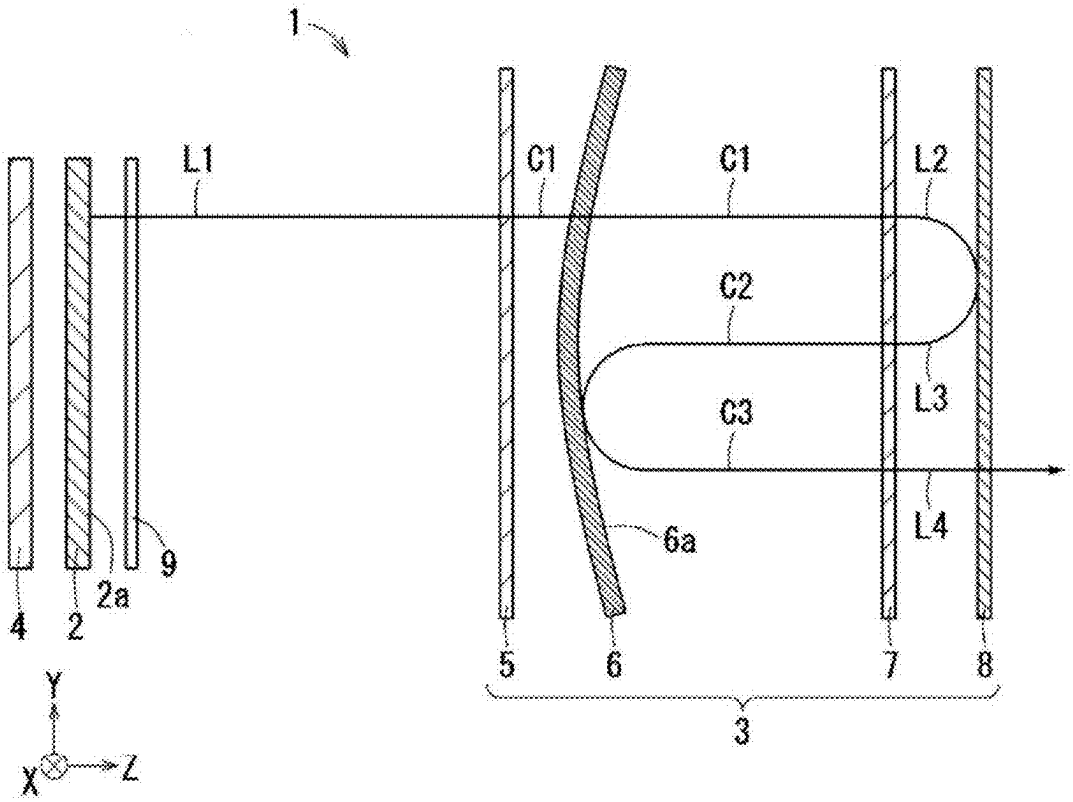
1
L1
C1
C1
L2
C2
L3
C3
L4
6a
9
2a
4
2
5
6
7
8
3
Y
X
Z

FIG. 4

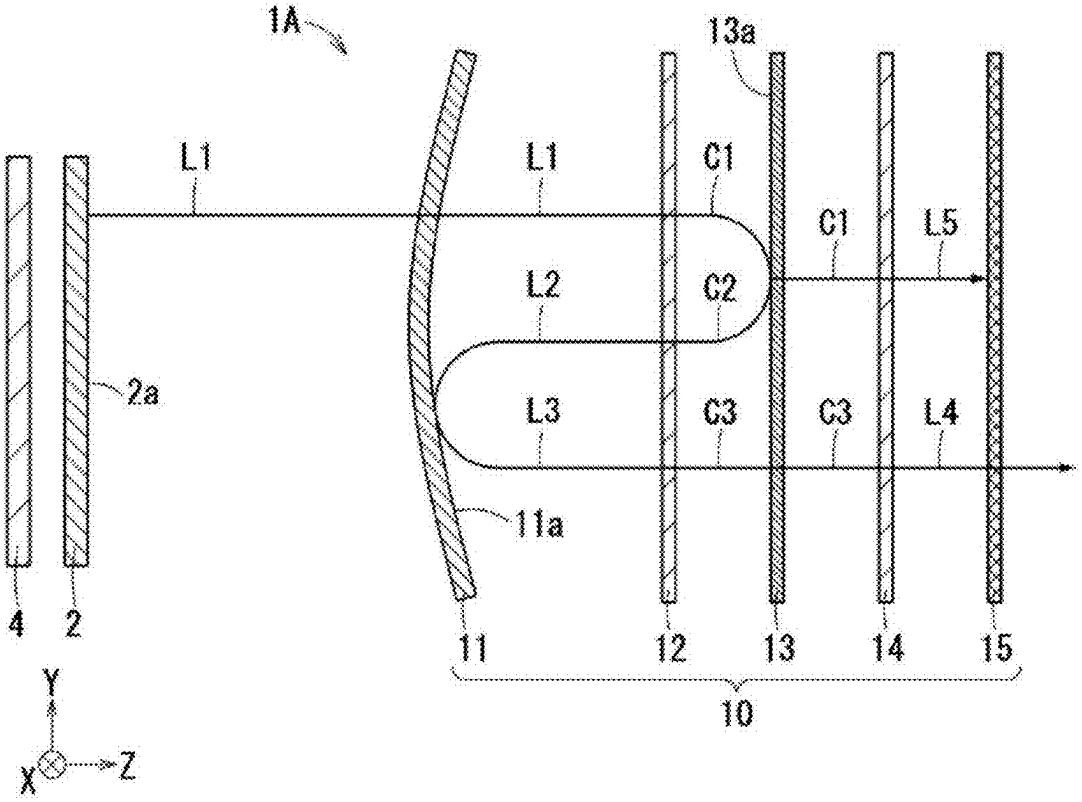
1A
13a
L1
L1
C1
C1
L5
L2
C2
2a
L3
C3
C3
L4
11a
4
2
11
12
13
14
15
10
Y
X
Z

FIG. 5

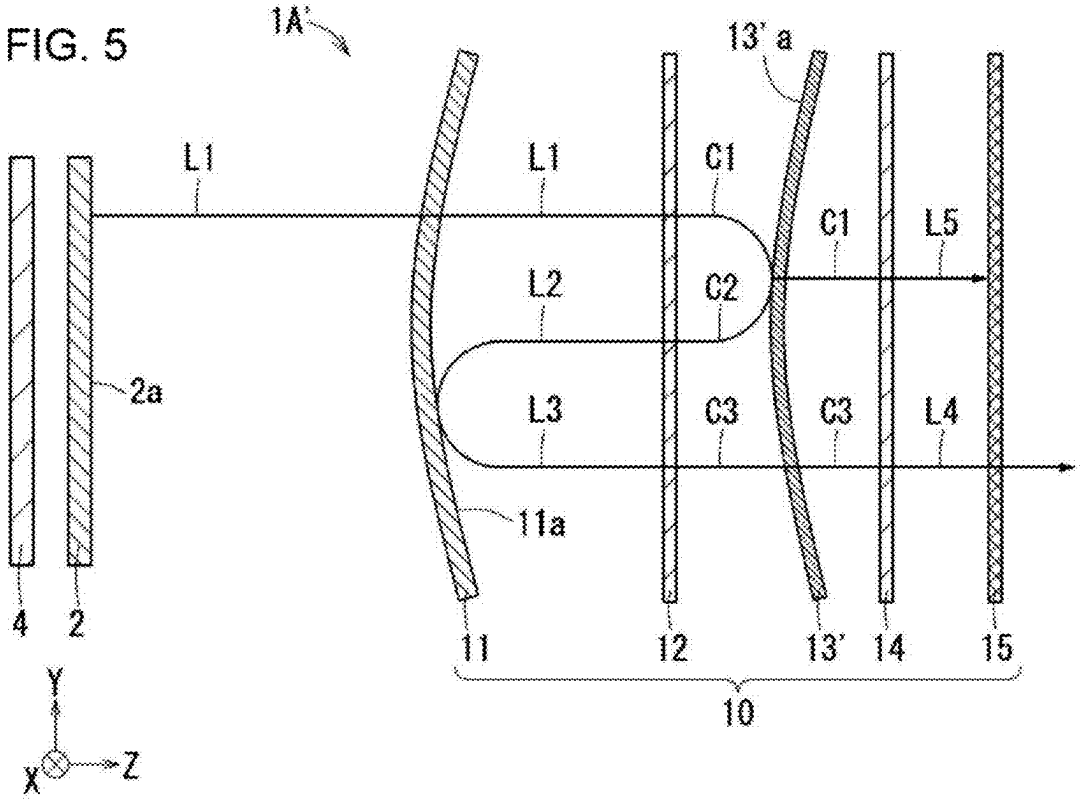
1A'
13' a
L1
L1
C1
C1
L5
L2
C2
2a
L3
C3
C3
L4
11a
4
2
11
12
13'
14
15
10
Y
X
Z

FIG. 6

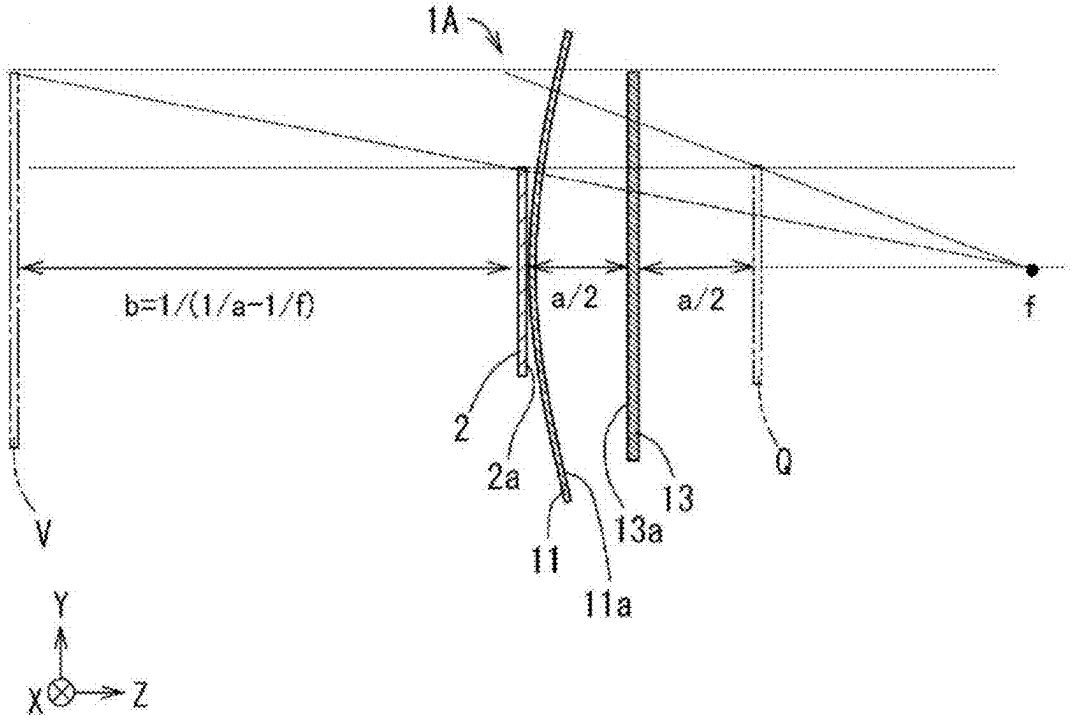
1A
b=1/(1/a-1/f)
a/2
a/2
f
2
2a
Q
13
13a
V
11
11a
Y
X
Z

FIG. 7

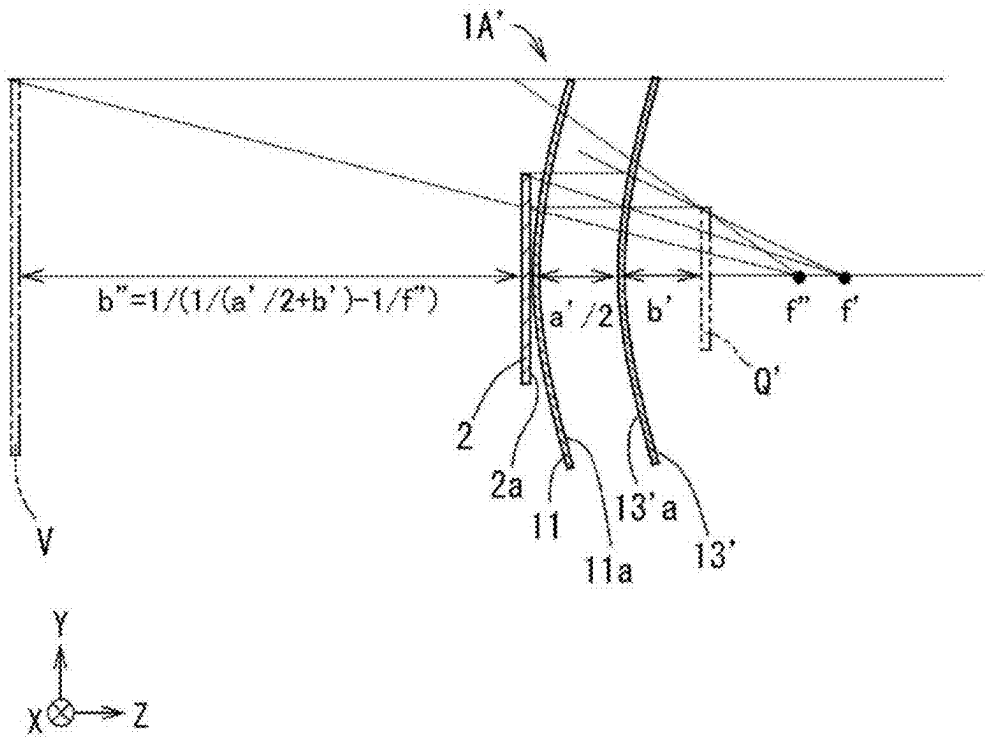
1A'
b"=1/(1/(a'/2+b')-1/f")
a'/2
b'
f"
f'
Q'
2
2a
11
11a
13'a
13'
V
Y
X
Z

FIG. 8

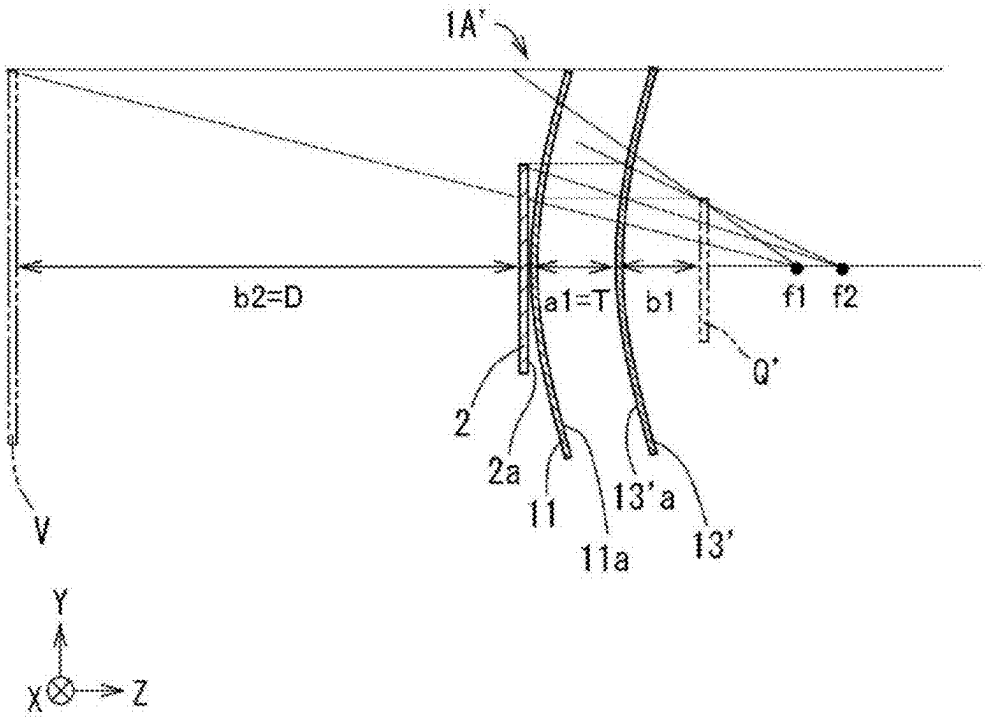
1A'
b2=D
a1=T
b1
f1
f2
Q'
2
2a
11
11a
13'a
13'
V
Y
X
Z

FIG. 9

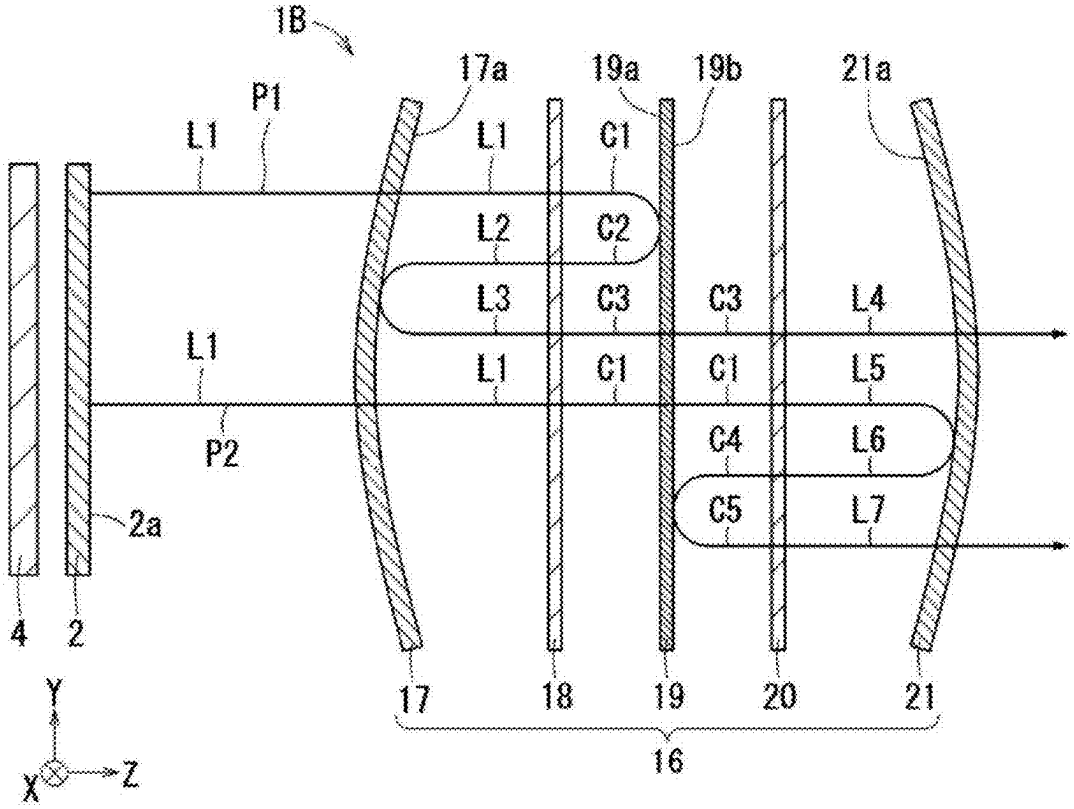
1B
17a
19a
19b
21a
P1
L1
L1
C1
L2
C2
L3
C3
C3
L4
L1
L1
C1
C1
L5
P2
C4
L6
C5
L7
2a
4
2
17
18
19
20
21
16
Y
X
Z

FIG. 10

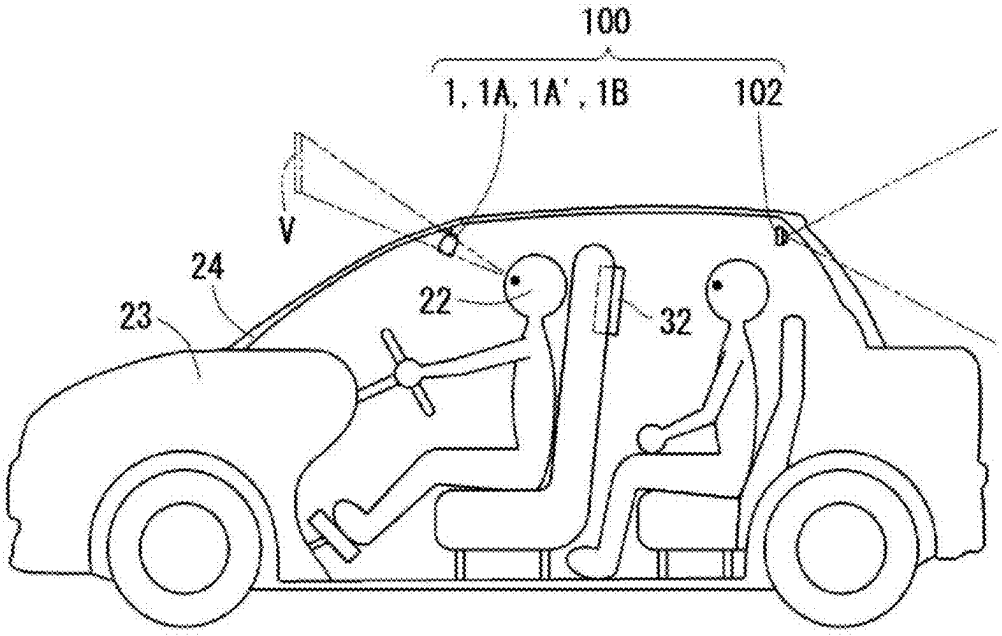
100
1, 1A, 1A', 1B
102
V
24
23
22
32

FIG. 11

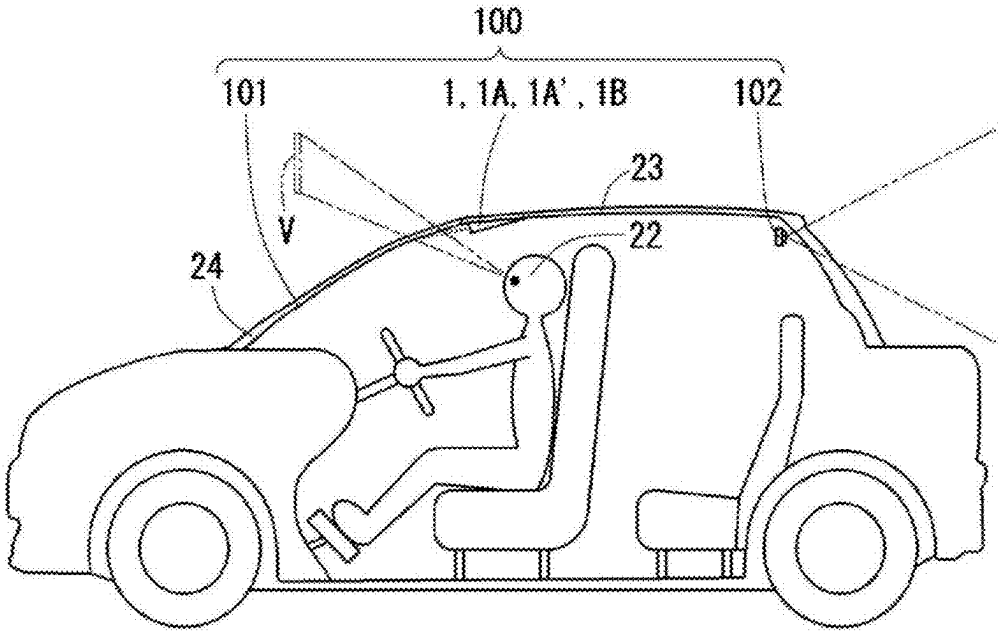
100
101
1, 1A, 1A', 1B
102
23
V
22
24

FIG. 12

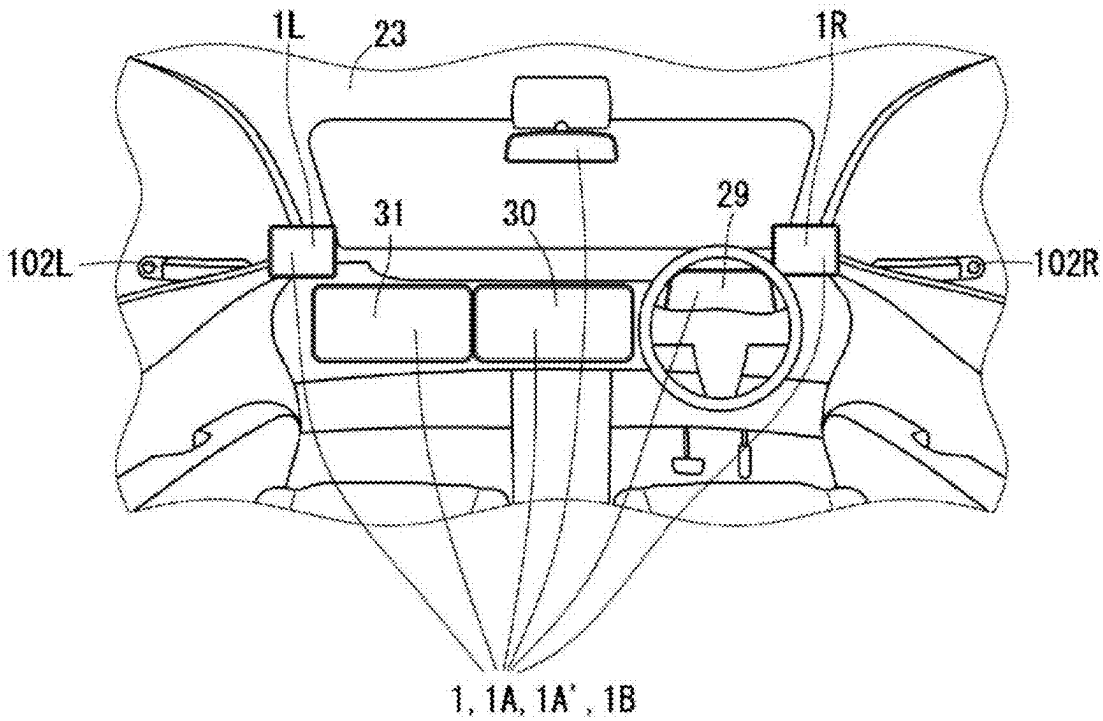
1L
23
1R
31
30
29
102L
102R
1, 1A, 1A', 1B

FIG. 13

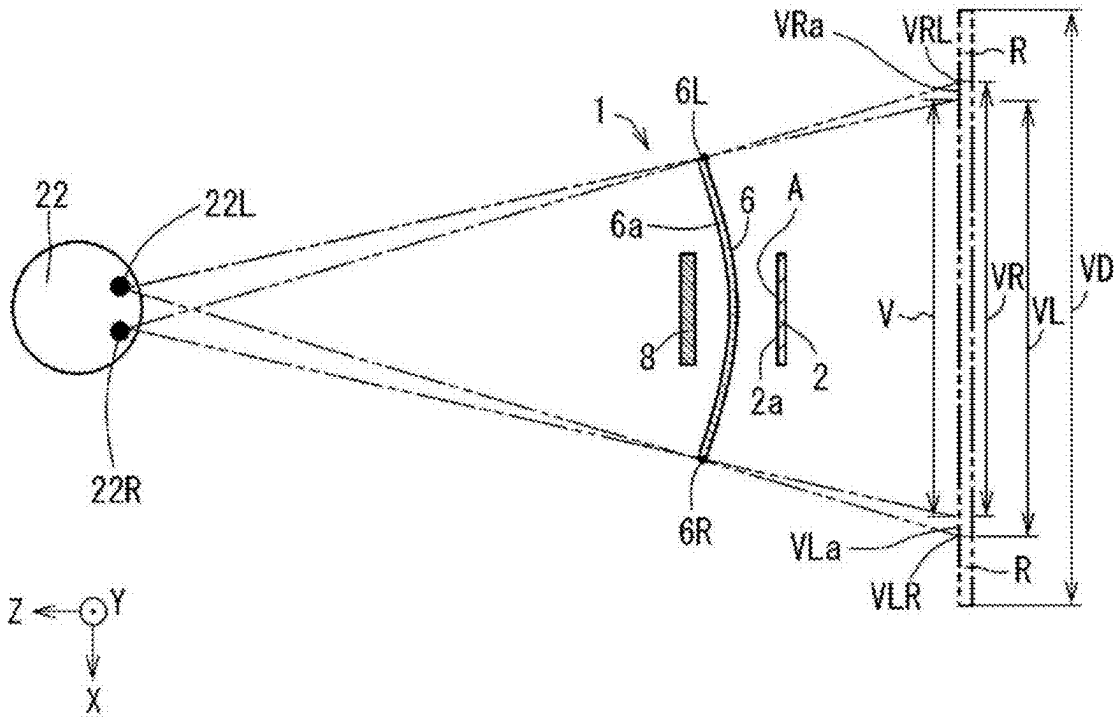
VRa
VRL
R
1
6L
22
22L
6a
6
A
VR
VD
V
VL
8
2
2a
22R
6R
VLa
R
VLR
Z
Y
X

FIG. 14

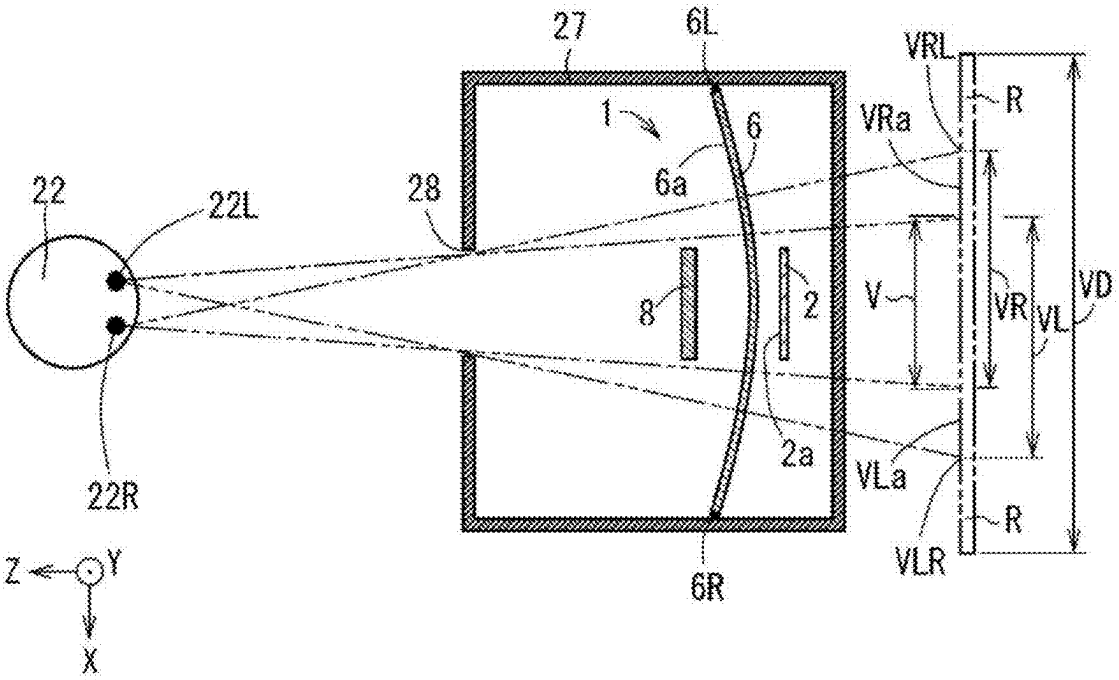
27
6L
VRL
R
1
6
VRa
6a
22
22L
28
V
VR
VL
VD
8
2
2a
VLa
22R
R
VLR
6R
Z
Y
X

FIG. 15

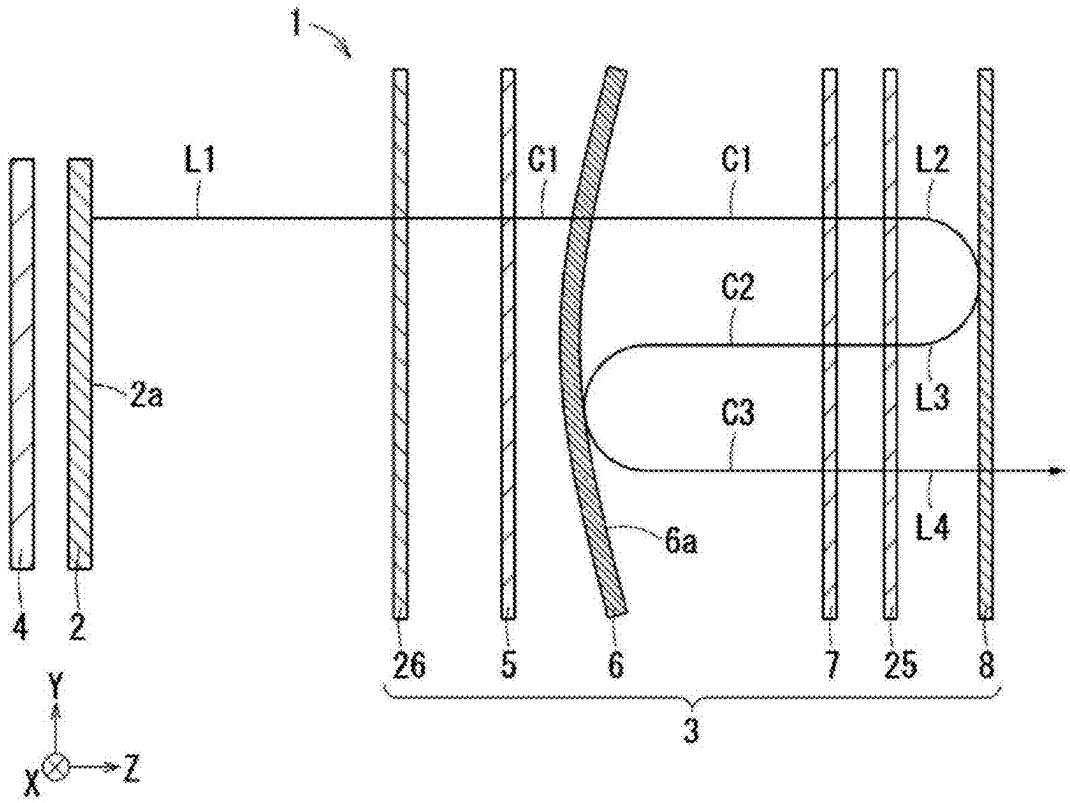
1
L1
C1
C1
L2
C2
2a
L3
C3
L4
6a
4
2
26
5
6
7
25
8
3
Y
X
Z

FIG. 16

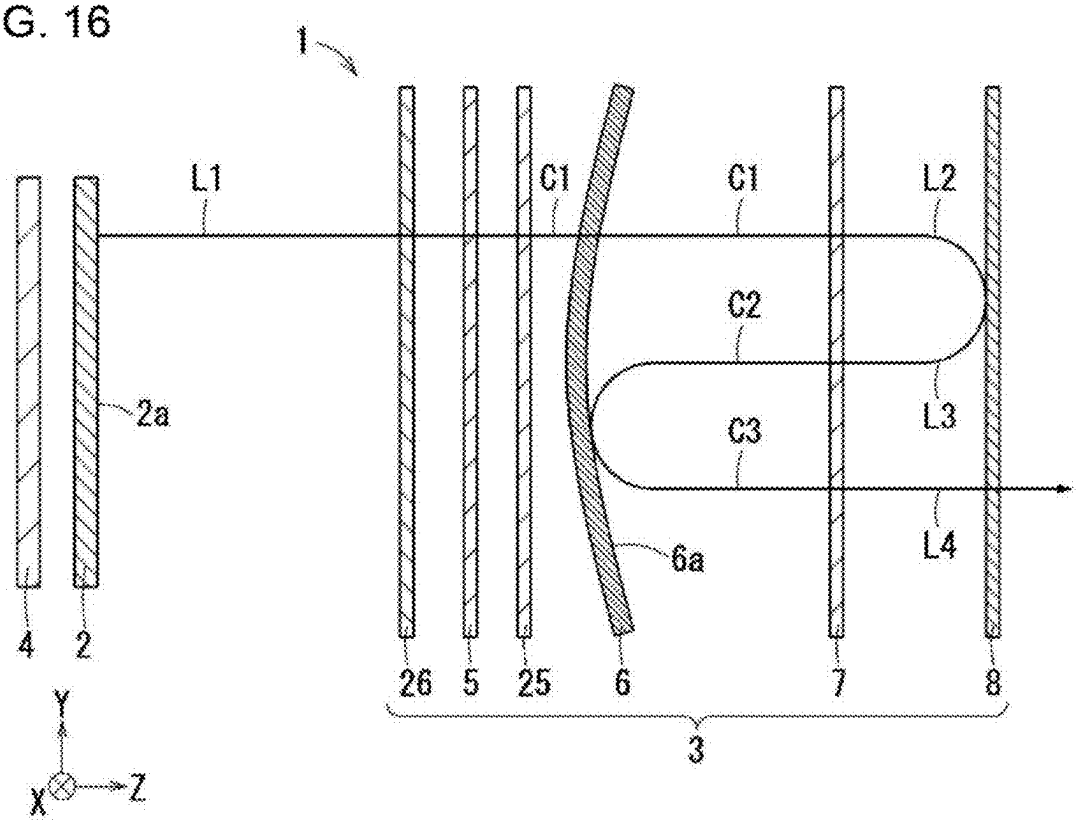
1
L1
C1
C1
L2
C2
2a
L3
C3
L4
6a
4
2
26
5
25
6
7
8
3
Y
X
Z

FIG. 17A

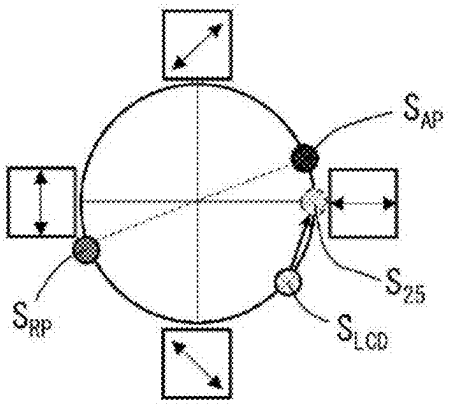

FIG. 17B

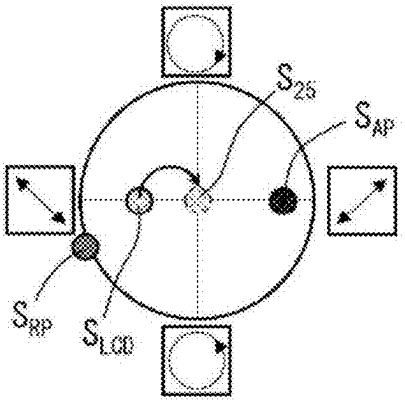

FIG. 17C

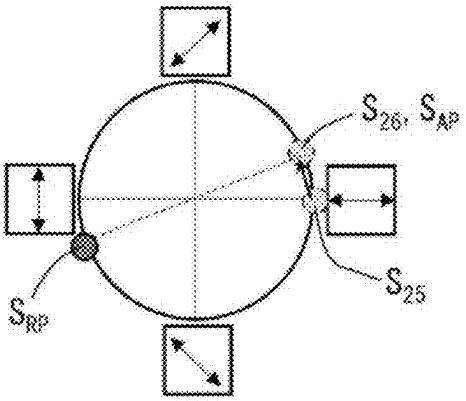

FIG. 17D

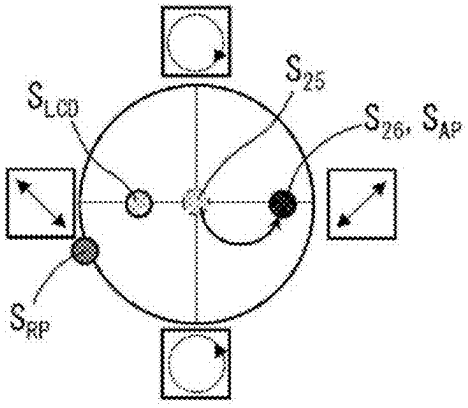

FIG. 18A

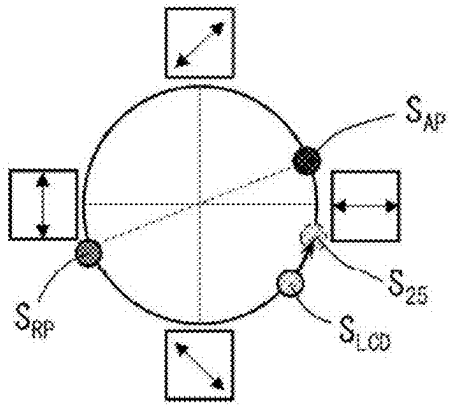

FIG. 18B

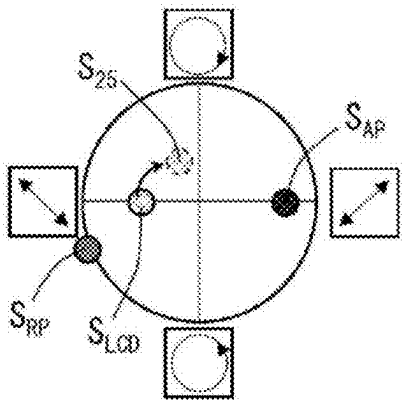

FIG. 18C

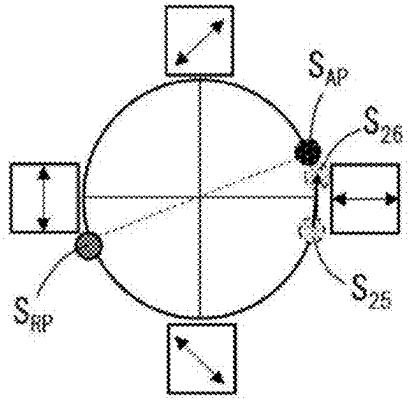

FIG. 18D

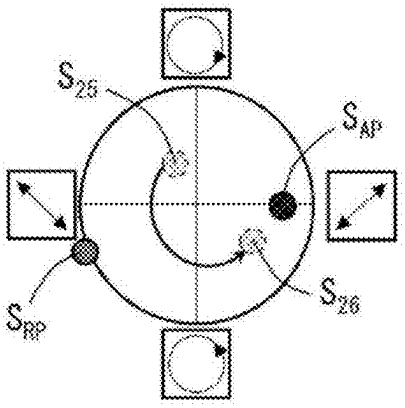

FIG. 19

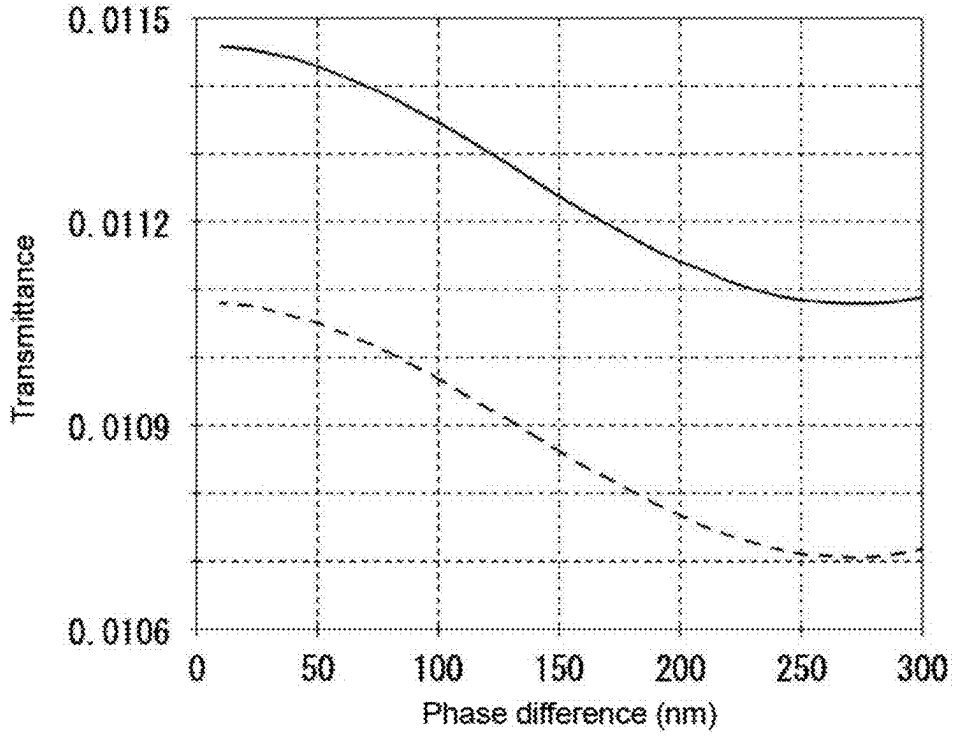
0.0115
0.0112
0.0109
0.0106
Transmittance
0
50
100
150
200
250
300
Phase difference (nm)

FIG. 20

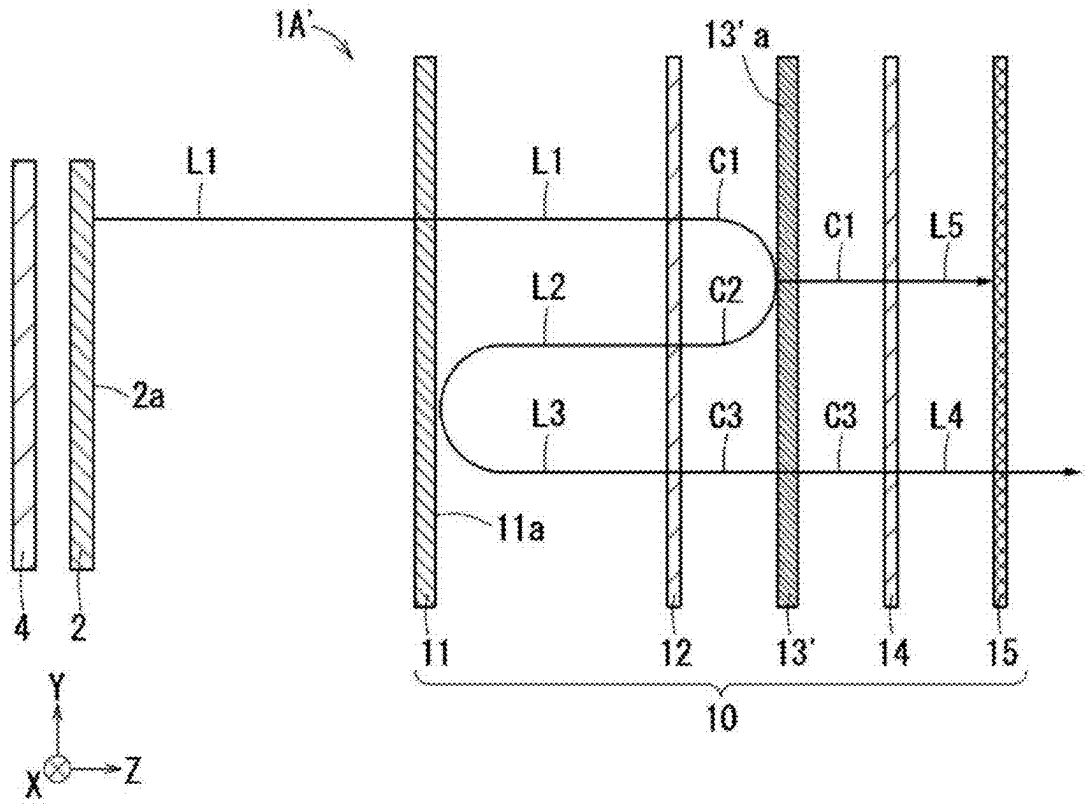
1A'
13' a
L1
L1
C1
C1
L5
L2
C2
2a
L3
C3
C3
L4
11a
4
2
11
12
13'
14
15
10
Y
X
Z

FIG. 21

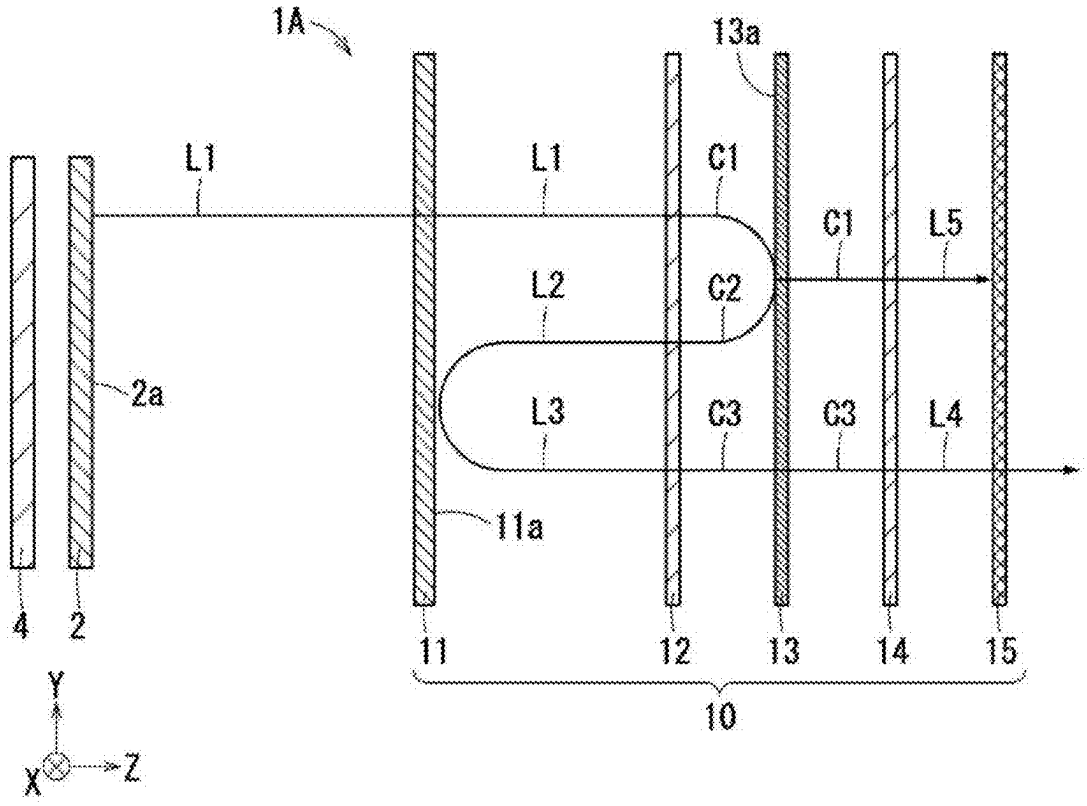

FIG. 22

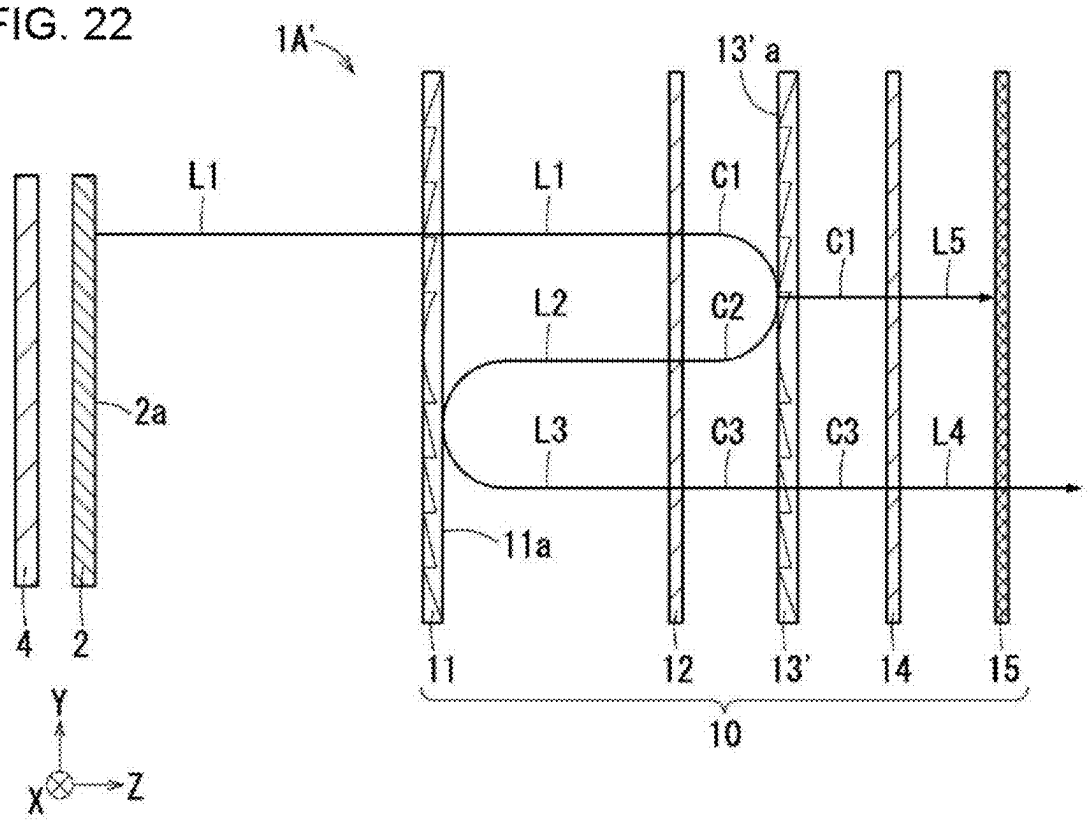
1A'
13' a
L1
L1
C1
C1
L5
L2
C2
2a
L3
C3
C3
L4
11a
4
2
11
12
13'
14
15
10
Y
X
Z

FIG. 23

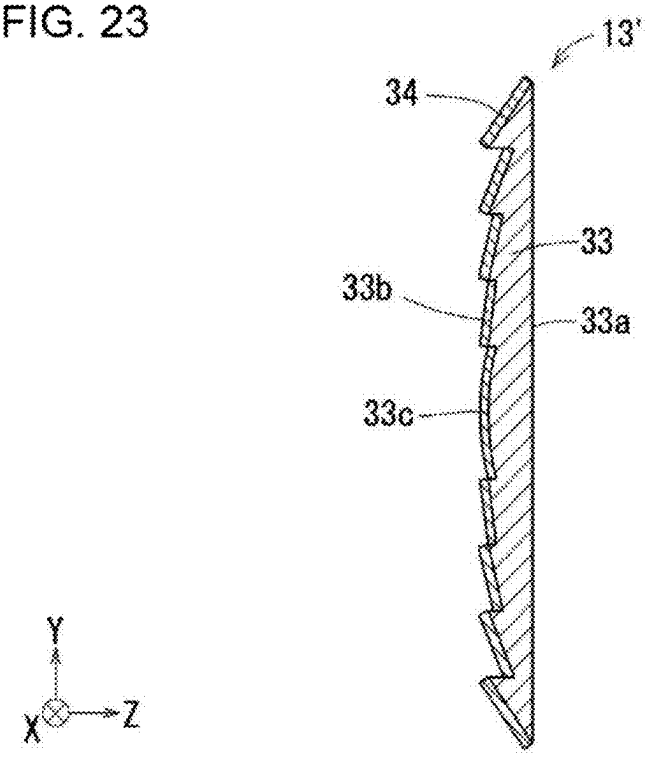
13'
34
33
33b
33a
33c
Y
X
Z

FIG. 24

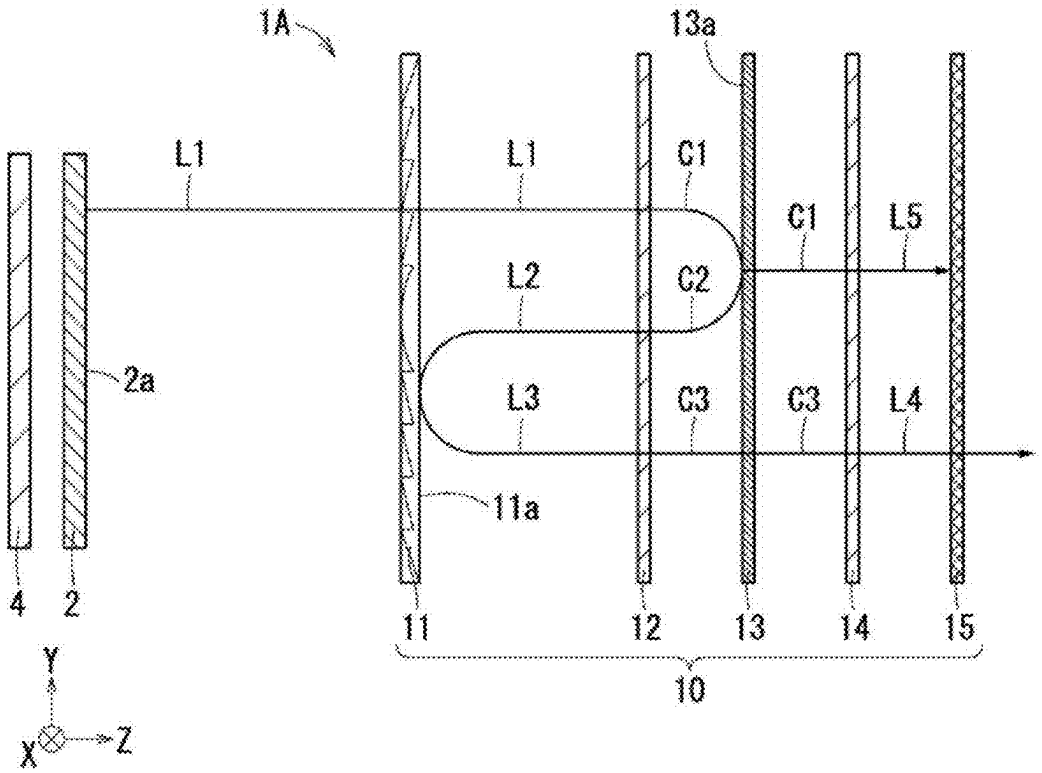
1A
13a
L1
L1
C1
C1
L5
L2
C2
2a
L3
C3
C3
L4
11a
4
2
11
12
13
14
15
10
Y
X
Z

FIG. 25

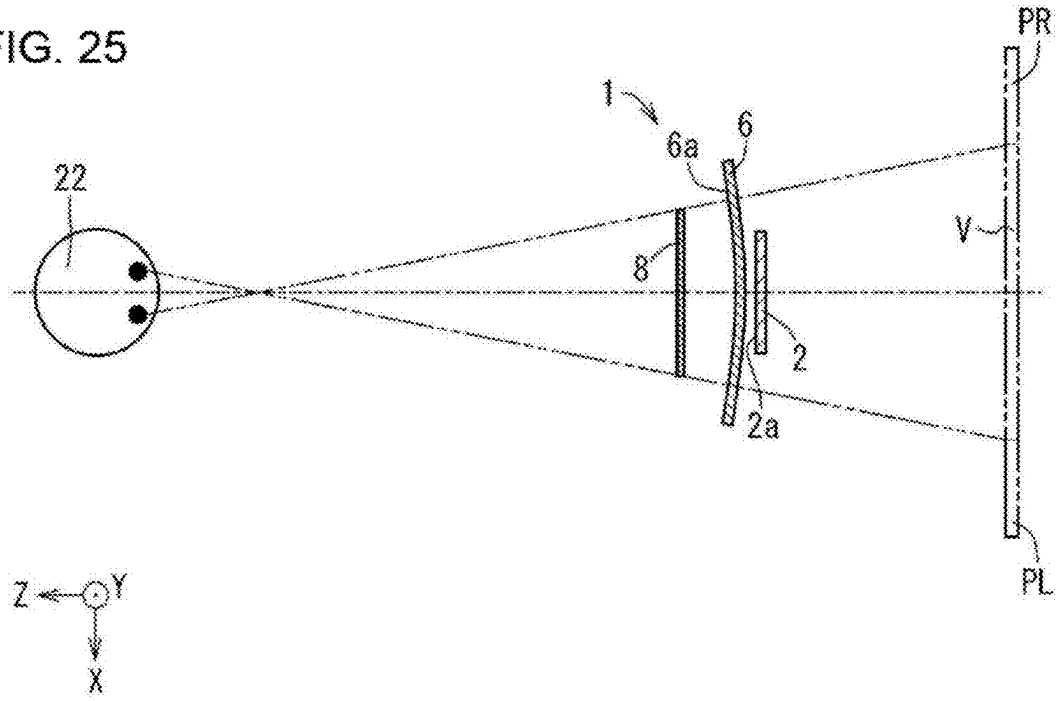
PR
1
6a
6
22
V
8
2
2a
PL
Z
Y
X

FIG. 26

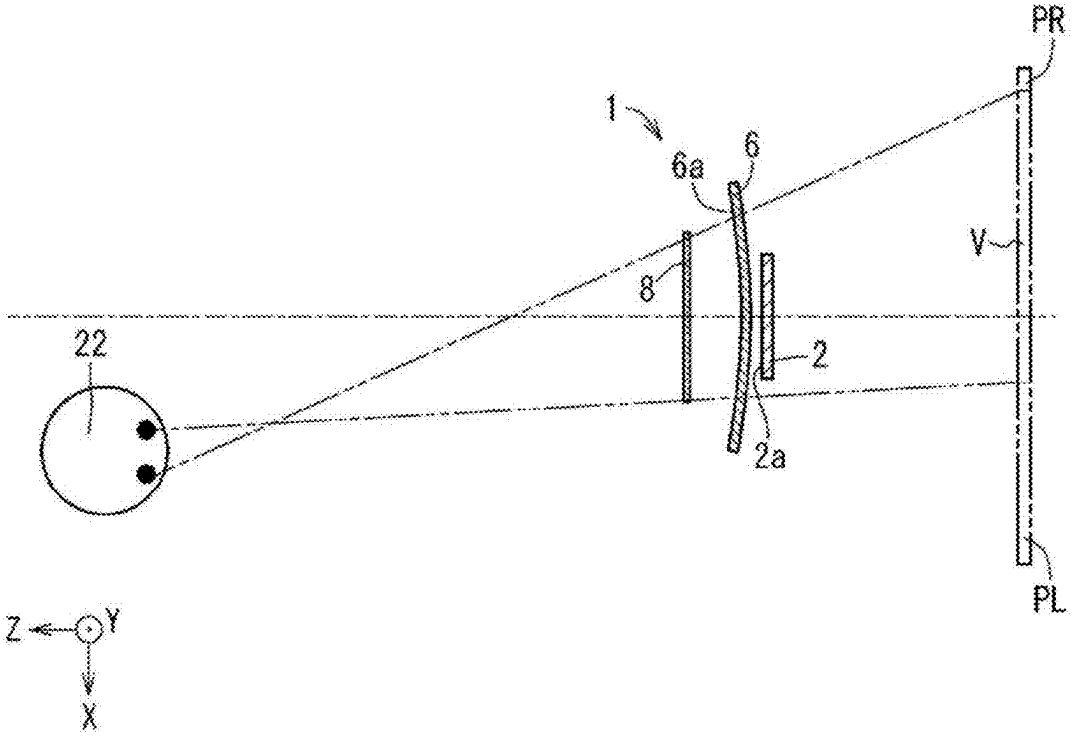

FIG. 27

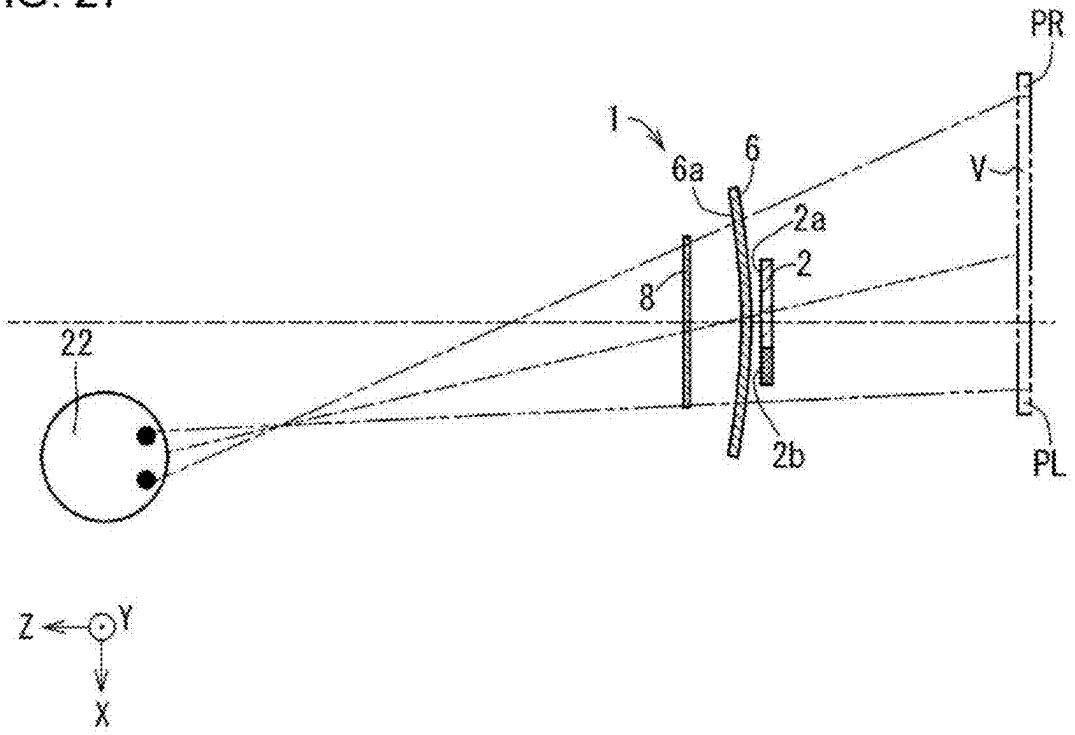

FIG. 28

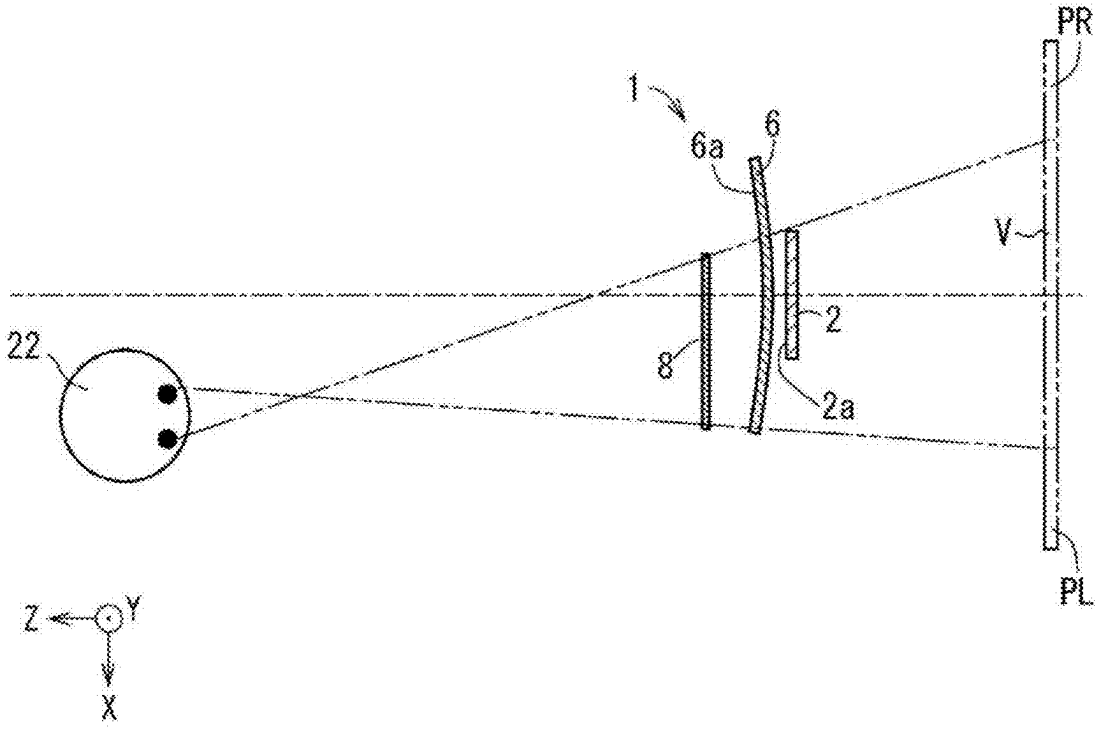

FIG. 29

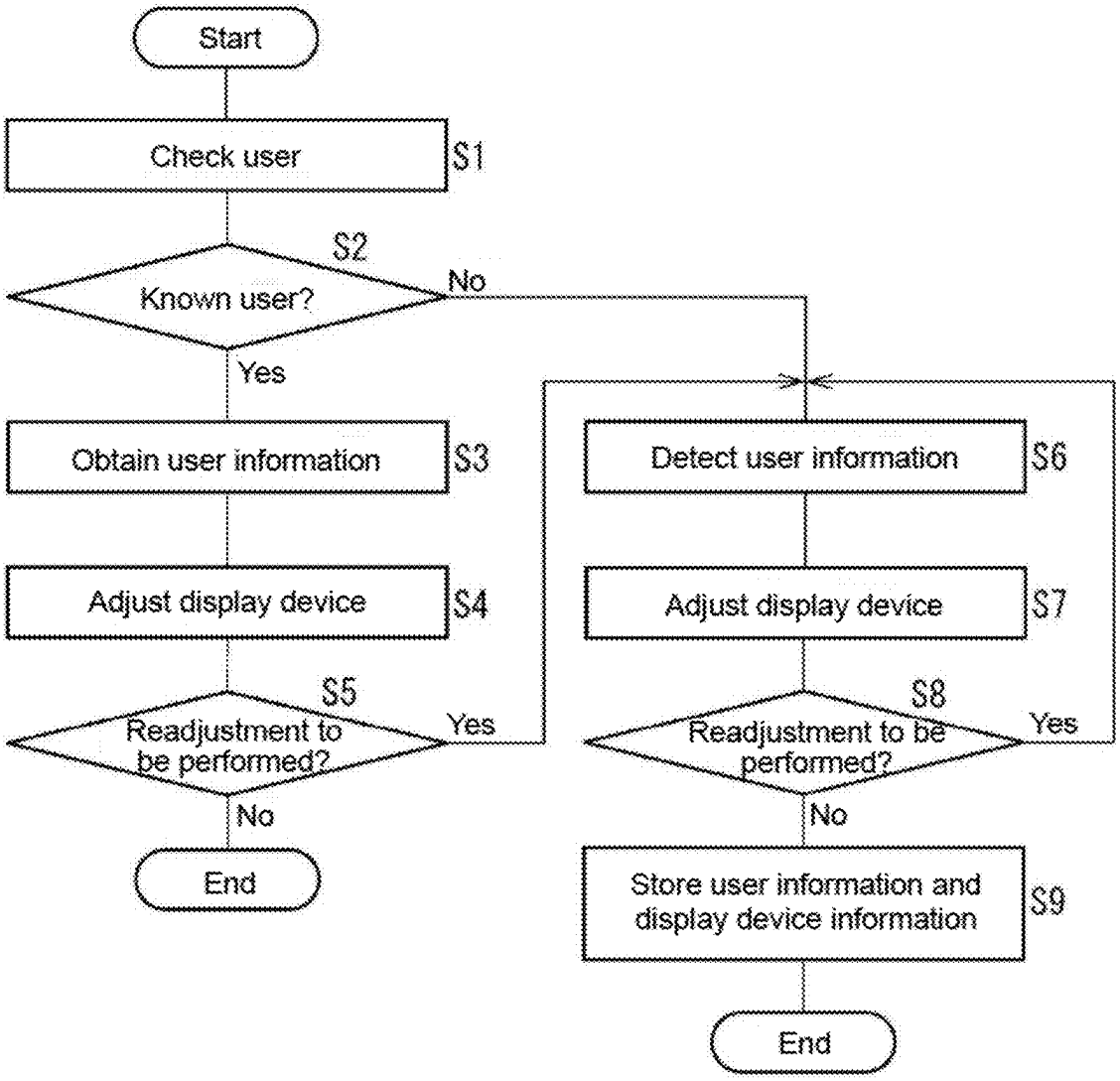
Start
Check user
S1
S2
Known user?
No
Yes
Obtain user information
S3
Adjust display device
S4
S5
Readjustment to be performed?
Yes
No
End
Detect user information
S6
Adjust display device
S7
S8
Readjustment to be performed?
Yes
No
Store user information and display device information
S9
End

FIG. 30

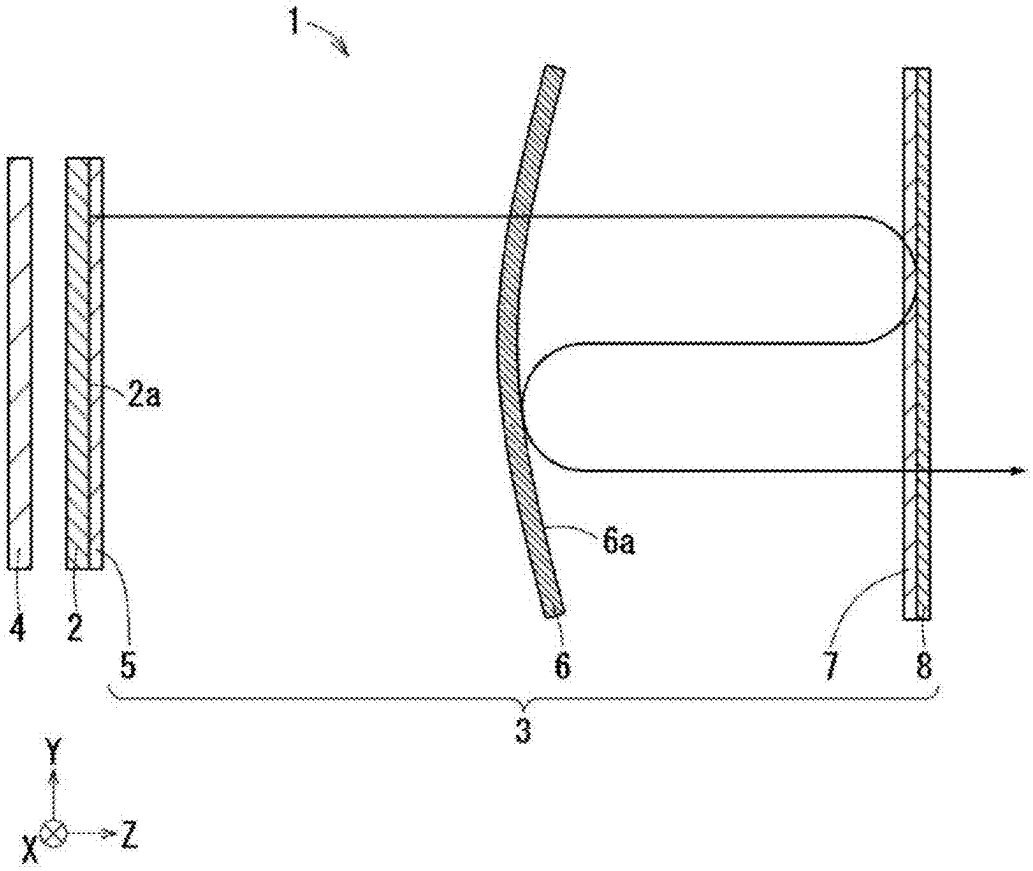

FIG. 31

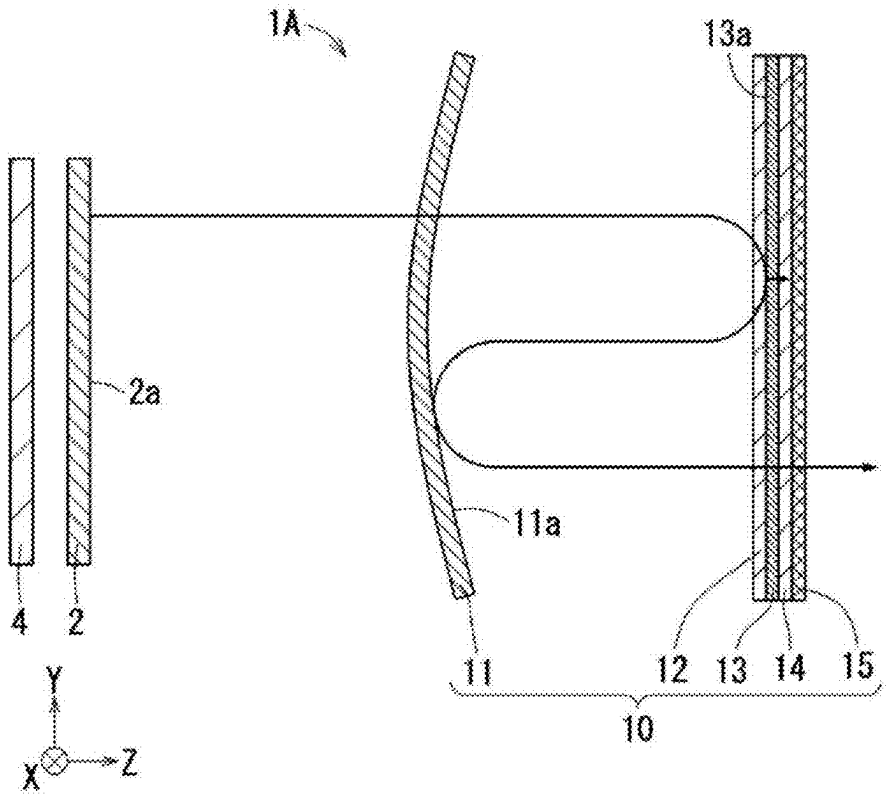
1A
13a
2a
11a
4
2
11
12
13
14
15
10
Y
X
Z

FIG. 32

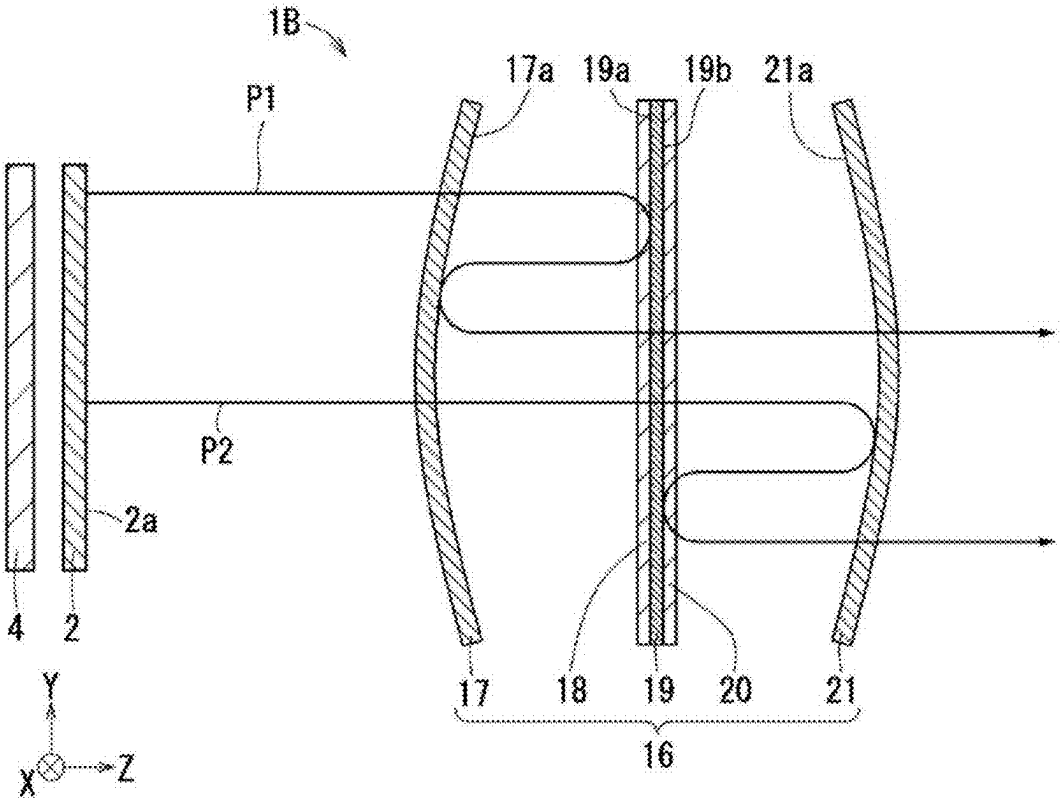
1B
17a
19a
19b
21a
P1
P2
2a
4
2
17
18
19
20
21
16
Y
X
Z

FIG. 33

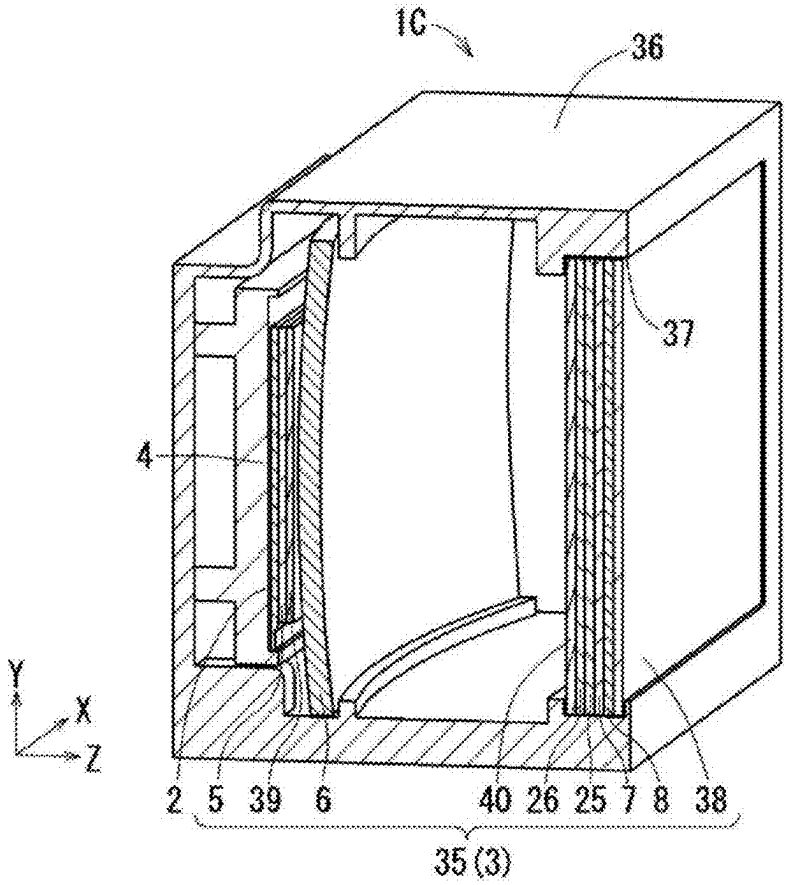
1C
36
37
4
Y
X
Z
2
5
39
6
40
26
25
7
8
38
35 (3)

FIG. 34

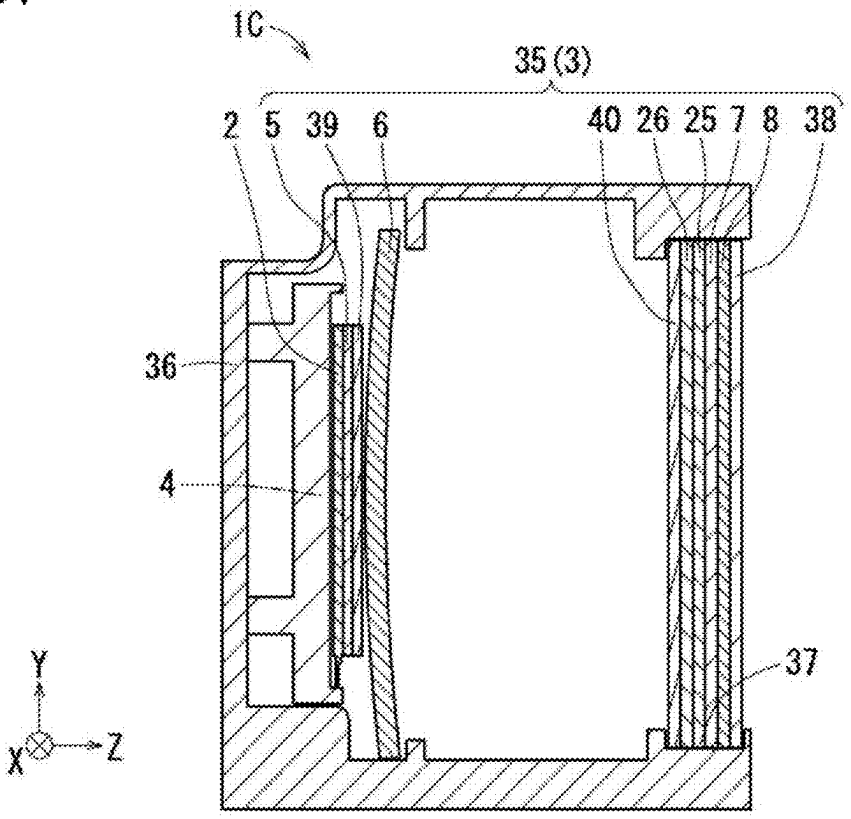
1C
35 (3)
2
5
39
6
40
26
25
7
8
38
36
4
37
Y
X
Z

FIG. 35

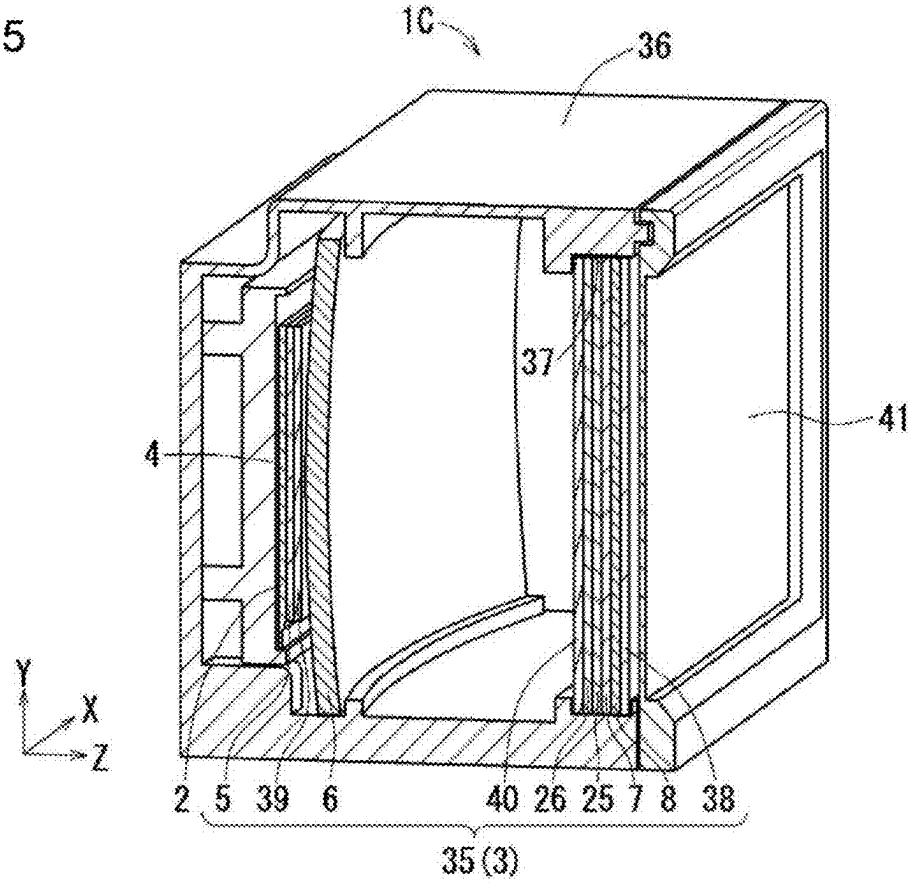
1C
36
37
41
4
Y
X
Z
2
5
39
6
40
26
25
7
8
38
35(3)

FIG. 36

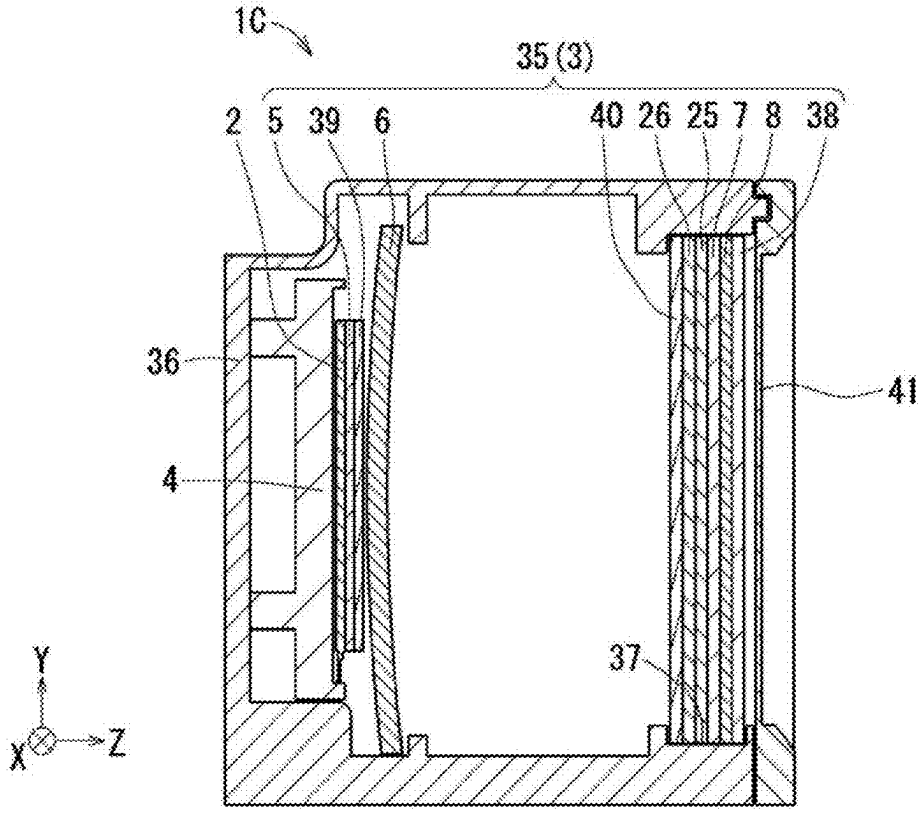
1C
35(3)
2
5
39
6
40
26
25
7
8
38
36
41
4
37
Y
X
Z

FIG. 37

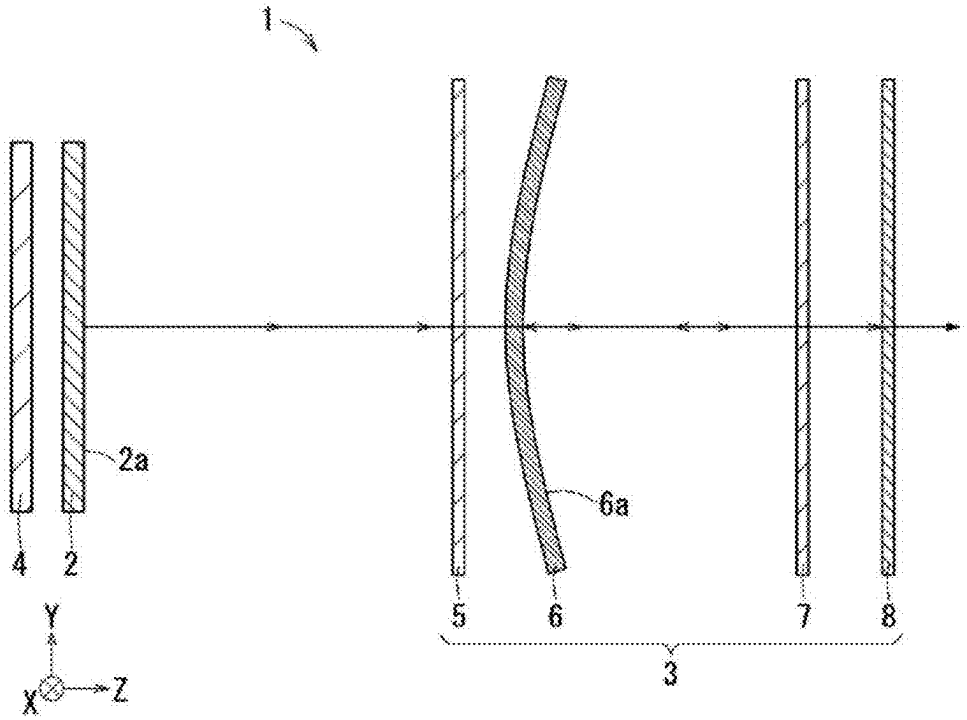

FIG. 38

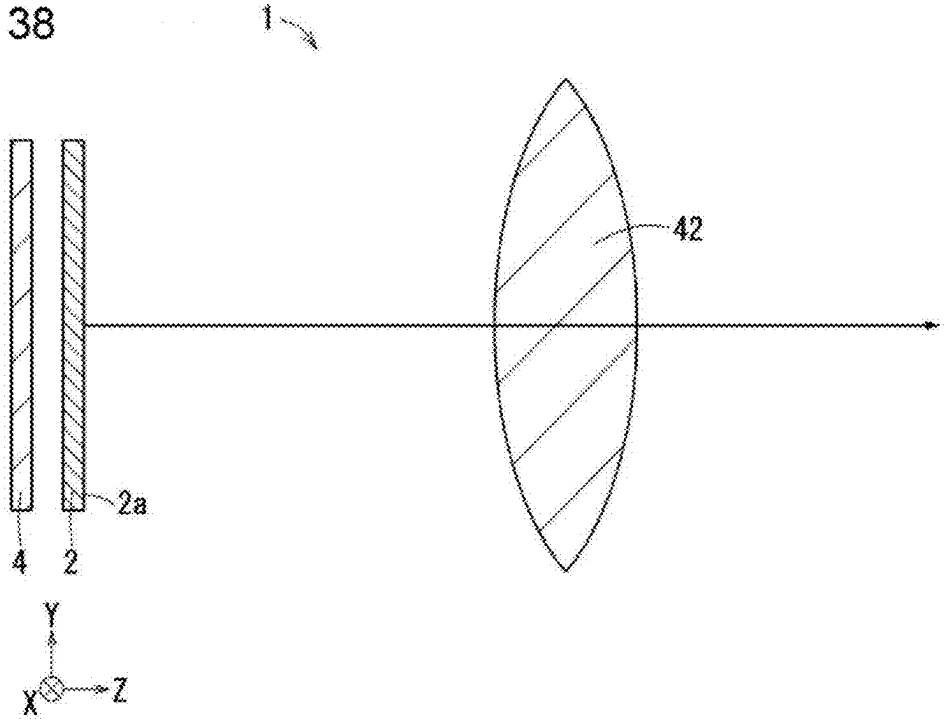

FIG. 39

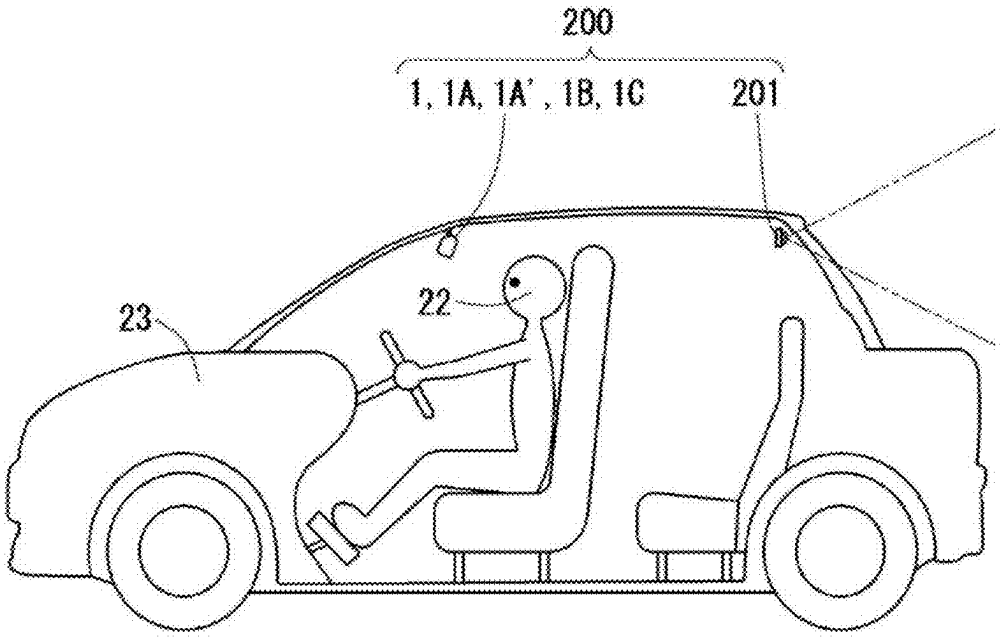

DISPLAY DEVICE, IMAGING DEVICE, DISPLAY SYSTEM, AND VEHICLE

CROSS-REFERENCE TO RELATED APPLICATION

[0001] This application is a continuation of International Patent Application No. PCT/JP2024/040045, filed on Nov. 11, 2024, which claims priority to and the benefit of Japanese Patent Application No. 2023-192609, filed on Nov. 10, 2023, Japanse Patent Application No. 2024-077602, filed on May 10, 2024, and Japanese Patent Application No. 2024-095459, filed on Jun. 12, 2024, each of which is incorporated herein by reference in its entirety.

[0002] The present disclosure relates to a display device, an imaging device, a display system, and a vehicle.

BACKGROUND OF INVENTION

[0003] A known display device is described in, for example, Patent Literature 1.

CITATION LIST

Patent Literature

[0004] Patent Literature 1: Japanese Unexamined Patent Application Publication No. 2022-63533

SUMMARY

[0005] In an aspect of the present disclosure, a display device includes a display panel, a first retarder, a second retarder, a reflective polarizer, and a semitransmissive mirror. The display panel emits display light. The first retarder faces the display panel. The second retarder is spaced from the first retarder. The reflective polarizer faces the second retarder to transmit first polarized light and reflect second polarized light. The semitransmissive mirror is between the first retarder and the second retarder and includes a reflective surface facing the second retarder. The first retarder and the second retarder convert the display light to the first polarized light and the second polarized light.

[0006] In another aspect of the present disclosure, a display device includes a display panel, a first retarder, a second retarder, a first semitransmissive mirror, a second semitransmissive mirror, and a polarizer. The display panel emits display light. The first retarder transmits the display light. The second retarder is spaced from the first retarder. The first semitransmissive mirror is between the display panel and the first retarder and includes a first reflective surface facing the first retarder. The second semitransmissive mirror is between the first retarder and the second retarder and includes a second reflective surface facing the first retarder. The polarizer faces the second retarder. The first retarder and the second retarder convert the display light to first polarized light to be transmitted through the polarizer and second polarized light to be transmitted through the polarizer with less transmission than the first polarized light.

[0007] In another aspect of the present disclosure, a display device includes a display panel, a first retarder, a second retarder, a first semitransmissive mirror, a second semitransmissive mirror, and a third semitransmissive mirror. The display panel emits display light. The first retarder transmits the display light. The second retarder is spaced from the first retarder. The first semitransmissive mirror is between the display panel and the first retarder and includes a first reflective surface facing the first retarder. The second semitransmissive mirror is between the first retarder and the second retarder and includes a second reflective surface facing the first retarder and a third reflective surface facing the second retarder. The third semitransmissive mirror includes a fourth reflective surface facing the second retarder.

[0008] In another aspect of the present disclosure, an imaging device includes any of the above display devices.

[0009] In another aspect of the present disclosure, a display device includes a display panel, an optical system, and a housing. The optical system projects display light emitted from the display panel as a virtual image or a real image. The housing accommodates the display panel and the optical system. The housing includes a window that transmits light emitted from the optical system. The window, the optical system, and the display panel overlap one another when viewed through the window in the housing.

[0010] In another aspect of the present disclosure, a vehicle includes the above display device.

[0011] In another aspect of the present disclosure, a display device includes a display panel and a convex lens. The display panel emits display light. The convex lens transmits the display light. An optical path length from the display panel to the convex lens is shorter than a focal length of the convex lens.

[0012] In another aspect of the present disclosure, a display device includes a display panel and a convex lens. The display panel emits display light. The convex lens transmits the display light. An optical path length from the display panel to the convex lens is longer than a focal length of the convex lens.

[0013] In another aspect of the present disclosure, a display system includes any of the above display devices and a camera. The display panel is configured to communicate with the camera and display an image captured by the camera.

[0014] In another aspect of the present disclosure, a vehicle includes the above display system.

BRIEF DESCRIPTION OF THE DRAWINGS

[0015] The objects, features, and advantages of the present disclosure will become more apparent from the following detailed description and the drawings.

[0016] FIG. **1** is a schematic diagram of a display device according to one or more embodiments of the present disclosure.

[0017] FIG. **2** is a cross-sectional view of a display device according to one embodiment of the present disclosure, illustrating its main components in an example.

[0018] FIG. **3** is a cross-sectional view of a display device according to one embodiment of the present disclosure, illustrating its main components in another example.

[0019] FIG. **4** is a cross-sectional view of a display device according to another embodiment of the present disclosure, illustrating its main components in an example.

[0020] FIG. **5** is a cross-sectional view of a display device according to another embodiment of the present disclosure, illustrating its main components in another example.

[0021] FIG. **6** is a diagram describing projection of a virtual image in the display device in FIG. **4**.

[0022] FIG. **7** is a diagram describing projection of a virtual image in the display device in FIG. **5**.

[0023] FIG. **8** is a diagram describing the design of an optical system in the display device in FIG. **5**.

[0024] FIG. **9** is a cross-sectional view of a display device according to still another embodiment of the present disclosure, illustrating its main components in an example.

[0025] FIG. **10** is a diagram of an imaging device according to one embodiment of the present disclosure, illustrating its structure in an example.

[0026] FIG. **11** is a diagram of an imaging device according to one embodiment of the present disclosure, illustrating its structure in another example.

[0027] FIG. **12** is a diagram of an imaging device according to one embodiment of the present disclosure, illustrating its structure in another example.

[0028] FIG. **13** is a top view describing another example display device.

[0029] FIG. **14** is a top view describing another example display device.

[0030] FIG. **15** is a cross-sectional view describing another example display device.

[0031] FIG. **16** is a cross-sectional view describing another example display device.

[0032] FIG. **17**A is a diagram describing an optical system in another example display device.

[0033] FIG. **17**B is a diagram describing an optical system in another example display device.

[0034] FIG. **17**C is a diagram describing an optical system in another example display device.

[0035] FIG. **17**D is a diagram describing an optical system in another example display device.

[0036] FIG. **18**A is a diagram describing an optical system in another example display device.

[0037] FIG. **18**B is a diagram describing an optical system in another example display device.

[0038] FIG. **18**C is a diagram describing an optical system in another example display device.

[0039] FIG. **18**D is a diagram describing an optical system in another example display device.

[0040] FIG. **19** is a graph describing an optical system in another example display device.

[0041] FIG. **20** is a cross-sectional view describing another example display device.

[0042] FIG. **21** is a cross-sectional view describing another example display device.

[0043] FIG. **22** is a cross-sectional view describing another example display device.

[0044] FIG. **23** is a cross-sectional view of a second semitransmissive mirror, illustrating its structure in an example.

[0045] FIG. **24** is a cross-sectional view describing another example display device.

[0046] FIG. **25** is a diagram describing the manner in which a virtual image appears to a user in front of the display device.

[0047] FIG. **26** is a diagram describing the manner in which a virtual image appears to a user not in front of the display device.

[0048] FIG. **27** is a diagram describing the manner in which a virtual image appears after the display device is adjusted.

[0049] FIG. **28** is a diagram describing the manner in which a virtual image appears after the display device is adjusted.

[0050] FIG. **29** is a flowchart describing control of the imaging device.

[0051] FIG. **30** is a cross-sectional view of a display device according to one embodiment of the present disclosure, illustrating its main components in another example.

[0052] FIG. **31** is a cross-sectional view of a display device according to another embodiment of the present disclosure, illustrating its main components in another example.

[0053] FIG. **32** is a cross-sectional view of a display device according to still another embodiment of the present disclosure, illustrating its main components in another example.

[0054] FIG. **33** is a perspective view of another example display device according to one embodiment of the present disclosure, illustrating its cross section.

[0055] FIG. **34** is a cross-sectional view of another example display device according to one embodiment of the present disclosure.

[0056] FIG. **35** is a perspective view of another example display device according to one embodiment of the present disclosure, illustrating its cross section.

[0057] FIG. **36** is a cross-sectional view of another example display device according to one embodiment of the present disclosure.

[0058] FIG. **37** is a diagram illustrating the optical path of display light in the display device in FIG. **2**.

[0059] FIG. **38** is a cross-sectional view of another example of the display device in FIG. **2**.

[0060] FIG. **39** is a diagram of a display system and a vehicle according to one embodiment of the present disclosure, illustrating their structures in an example.

DESCRIPTION OF EMBODIMENTS

[0061] Various small display devices have been proposed for, for example, a digital rearview mirror installed in a vehicle or a head-mounted display mountable on a user's head. A display device described in Patent Literature 1 is configured to emit display light from a display panel through multiple optical members, such as retarders and a reflective polarizer.

[0062] Such a known display device may easily undergo, for example, deformation or misalignment of its optical members, possibly reducing display quality.

[0063] One or more embodiments of the present disclosure will now be described with reference to the drawings. The drawings used hereafter may be schematic. The drawings used hereafter illustrate the main components of a display device and a virtual image display device according to one or more embodiments of the present disclosure. In one or more embodiments of the present disclosure, a display device and a virtual image display device may include known components that are not illustrated, such as a holder of an optical system and a housing. Some of the figures herein use an orthogonal XYZ coordinate system defined for convenience. A Y-direction is also referred to as a height direction. A Z-direction is also referred to as an emission direction or a depth direction.

[0064] FIGS. **1** to **39** are diagrams and a graph describing a display device, an imaging device, a display system, and a vehicle according to one or more embodiments of the present disclosure. For ease of illustration, the optical path of light incident on a light-reflective optical member and the optical path of light reflected by the optical member are

shifted from each other in the height direction (Y-direction) in FIGS. **2** to **5**, **9**, **15**, **16**, **20** to **22**, **24**, and **30** to **32**.

[0065] In one embodiment of the present disclosure, as illustrated in FIG. **1**, a display device **1** includes a display panel **2** and an optical system **3**. The display device **1** causes a part of the display light emitted from the display panel **2** to be incident on the eyes of a user **22** and allow the user **22** to view the display light as a formed image, a picture, or an aerial image. The display device **1** allows the user **22** to view the display on the display panel **2**, or in other words, the display light emitted from the display panel **2**, at a position different from the position of the display panel **2**. In one embodiment of the present disclosure, the display device **1** allows the user **22** to view the display light as a virtual image V. The virtual image V may be formed at a position farther than the display device **1** as viewed from the user **22**. The virtual image V may be a magnified erect virtual image of the display on the display panel **2**. When the display device **1** includes a housing (refer to FIGS. **33** to **36**) accommodating the display panel **2** and the optical system **3**, the virtual image V may be formed inside the housing or outside the housing. The virtual image V may be formed at a position farther than or nearer than the display panel **2** as viewed from the user **22**. When the housing includes a window **37** (refer to FIGS. **33** to **36**) that transmits the display light emitted from the optical system **3**, the virtual image V may be formed at a position farther than or nearer than the window **37** (a light-transmissive plate **38**) as viewed from the user **22**. When the display device **1** includes a touchscreen **41** (refer to FIGS. **35** and **36**), the virtual image V may be formed at a position farther than or nearer than the touchscreen **41** as viewed from the user **22**.

[0066] Note that the display device **1** may be configured to cause a part of the display light emitted from the display panel **2** to be incident on the eyes of the user **22** and allow the user **22** to view the display light as a real image. The real image may be formed at a position nearer than the display device **1** as viewed from the user **22**. When the display device **1** includes a housing **36** (refer to FIGS. **33** to **36**) accommodating the display panel **2** and the optical system **3**, the real image may be formed inside the housing **36** or outside the housing **36**. The real image may be formed at a position farther than or nearer than the display panel **2** as viewed from the user **22**. When the housing **36** includes the window **37** (refer to FIGS. **33** to **36**) that transmits the display light emitted from the optical system **3**, the real image may be formed at a position farther than or nearer than the window **37** (the light-transmissive plate **38**) as viewed from the user **22**. When the display device **1** includes the touchscreen **41** (refer to FIGS. **35** and **36**), the real image may be formed at a position farther than or nearer than the touchscreen **41** as viewed from the user **22**.

[0067] The display panel **2** includes a display surface **2***a* to display an image. In other words, the display panel **2** emits display light of the displayed image from the display surface **2***a*. The display panel **2** may be configured to emit linearly polarized light as the display light. Although the display panel **2** emits s-polarized light as the display light in the example described below, the display light is not limited to this.

[0068] The display panel **2** may be a liquid crystal panel. The liquid crystal panel may have a structure of any known liquid crystal panel. A known liquid crystal panel may be, for example, an in-plane switching (IPS) panel, a fringe field switching (FFS) panel, a vertical alignment (VA) panel, or an electrically controlled birefringence (ECB) panel.

[0069] The display device **1** may include an illuminator **4** that illuminates the display panel **2** in a planar manner. The illuminator **4** is also referred to as a backlight. The illuminator **4** may be an edge-lit backlight or a direct backlight. The edge-lit backlight includes one or more light sources arranged at the outer periphery of the display panel **2**. The light emitted from the light sources is guided by a light guide plate and evenly distributed over the entire back surface of the display panel **2**. The direct backlight includes an array of light sources on the back surface of the display panel **2**. The light emitted from the light sources illuminates the display panel **2**. The light sources in the illuminator **4** may be, for example, cold cathode fluorescent lamps, halogen lamps, or xenon lamps, or may be light-emitting diodes (LEDs), organic LEDs (OLEDs), or laser diodes (LDs). The light sources in the illuminator **4** may be LDs, which can emit highly monochromatic light, to facilitate the design of the optical system **3**, particularly, an optical member with wavelength-dependent optical properties.

[0070] The display panel **2** is not limited to the liquid crystal panel (transmissive display panel). The display panel **2** may be a self-luminous display panel including self-luminous light emitters, such as LEDs, OLEDs, and LDs.

[0071] The optical system **3** projects the display light emitted from the display panel **2** in the field of view of the user **22** as the virtual image V. As illustrated in FIG. **2**, the optical system **3** may include a first retarder **5**, a semitransmissive mirror **6**, a second retarder **7**, and a reflective polarizer **8**. The first retarder **5**, the semitransmissive mirror **6**, the second retarder **7**, and the reflective polarizer **8** are arranged in this order in the emission direction (positive Z-direction) of the display light from the display panel **2**.

[0072] The first retarder **5** faces the display surface **2***a* of the display panel **2**. The first retarder **5** is spaced from the display surface **2***a* in the emission direction of the display light from the display panel **2**. The second retarder **7** is spaced from the first retarder **5** in the emission direction of the display light from the display panel **2**. The first retarder **5** and the second retarder **7** are quarter-wave plates. Each of the first retarder **5** and the second retarder **7** introduces a quarter-wavelength phase difference to the polarization plane of incident light (the polarization plane in a vibration direction of the electric field). This allows a part of the display light emitted from the display panel **2** to be reflected by the reflective polarizer **8** and incident on the semitransmissive mirror **6**.

[0073] Each of the first retarder **5** and the second retarder **7** may have any structure that can introduce an intended phase difference to light that has been transmitted through the first retarder **5** and the second retarder **7** to cause the light to be reflected by the reflective polarizer **8** after being transmitted through the first retarder **5** and the second retarder **7**. More specifically, when the polarized light transmitted through the first retarder **5** and the second retarder **7** is referred to as second polarized light, the first retarder **5** and the second retarder **7** may be, for example, waveplates other than quarter-wave plates or a combination of a quarter-wave plate and another waveplate that can produce such second polarized light. Note that, in one or more embodiments of the present disclosure described below, the first retarder **5** and the second retarder **7** are quarter-wave plates.

[0074] The second retarder **7** may have any structure that can introduce an intended phase difference to light that has been transmitted through the second retarder **7** to cause the light to be transmitted through the reflective polarizer **8** when the light reaches the reflective polarizer **8** again after being reflected by the reflective polarizer **8** and transmitted through the second retarder **7**. More specifically, when the polarized light reflected by the reflective polarizer **8** and then transmitted through the second retarder **7** is referred to as first polarized light, the second retarder **7** may be, for example, a waveplate other than a quarter-wave plate that can produce such first polarized light.

[0075] As illustrated in FIG. **30**, the first retarder **5** may be integral with the display panel **2**. Note that, being "integral" may refer to two members being placed in contact with each other or joined together with an optically transparent adhesive, such as an optically clear adhesive (OCA).

[0076] The semitransmissive mirror **6** is located between the first retarder **5** and the second retarder **7**. The semitransmissive mirror **6** may transmit a part (e.g., substantially 50%) of incident light and reflect the remaining part (e.g., substantially 50%). The semitransmissive mirror **6** reflects a part of the display light reflected by the reflective polarizer **8** and causes the reflected light to be incident on the eyes of the user **22**. This allows the user **22** to view the virtual image V. As illustrated in FIG. **2**, the semitransmissive mirror **6** may be a concave mirror including a concave reflective surface **6***a* facing the second retarder **7**. The reflective surface **6***a* of the semitransmissive mirror **6** may at least partly have a spherical shape, an aspherical shape, or a freeform shape.

[0077] The semitransmissive mirror **6** includes, for example, a substrate and a semitransmissive reflective layer on a surface of the substrate. The substrate may have a transmittance of 100% or substantially 100% to light in the visible light region. The substrate may be made of, for example, a resin material or a glass material. The resin material may be, for example, an acrylic resin or a polycarbonate resin. The semitransmissive reflective layer may be a metal thin film. The metal thin film may be made of a metal material such as aluminum or chromium. The semitransmissive reflective layer is not limited to a metal thin film, and may be, for example, a dielectric multilayer film. The semitransmissive mirror **6** may be configured to reflect light with its semitransmissive reflective layer. The semitransmissive reflective layer may be on the surface of the substrate facing the second retarder **7**.

[0078] The reflective polarizer **8** faces the surface of the second retarder **7** opposite to the surface facing the semitransmissive mirror **6**. In other words, the reflective polarizer **8** is located downstream from the second retarder **7** in the emission direction of the display light from the display panel **2**. The reflective polarizer **8** may transmit a part of incident light and reflect the remaining part. In the present embodiment, the reflective polarizer **8** is configured to reflect polarized light (also referred to as p-polarized light or second polarized light) having a polarization axis perpendicular to the polarization axis of the display light, and transmit polarized light (also referred to as s-polarized light or first polarized light) having a polarization axis parallel to the polarization axis of the display light. This allows the user **22** to view the virtual image V. As illustrated in FIG. **30**, the reflective polarizer **8** may be integral with the second retarder **7**.

[0079] The reflective polarizer **8** may be, for example, a wire-grid polarizer including a substrate and multiple thin metal wires (also referred to as a metal nanowire grid) on a surface of the substrate. The substrate may have a transmittance of 100% or substantially 100% to light in the visible light region. The substrate may be made of, for example, a resin material or a glass material. The thin metal wires may be made of a metal material such as aluminum, chromium, or titanium oxide. The thin metal wires may be arranged in one direction. The reflective polarizer **8** can transmit an optical component vibrating in a direction perpendicular to the grid, and reflect an optical component vibrating in a direction parallel to the grid.

[0080] The display device **1** includes a controller **43**. The controller **43** is connected to and controls each of the components of the display device **1**. The controller **43** may control the illuminator **4**. The controller **43** may control an image displayed on the display panel **2** and control the illuminator **4**. The controller **43** may control the illuminator **4** based on the image displayed on the display panel **2**. The controller **43** may include one or more processors. The processors may include a general-purpose processor configured to cause reading of a specific program to perform a specific function, and a processor dedicated to specific processing. The processors may include a programmable logic device (PLD). The controller **43** may be a system on a chip (SoC) or a system in a package (SiP) in which one or more processors cooperate with one another. The controller **43** includes a storage that may store, for example, various items of information or a program for causing each of the components of the display device **1** to operate. The storage may be, for example, a semiconductor memory. The storage may function as a work memory for the controller **43**.

[0081] The optical function of the optical system **3** will now be described. The display panel **2** emits s-polarized light (first linearly polarized light L**1**) as the display light. The first linearly polarized light L**1** as the display light emitted from the display panel **2** is transmitted through the first retarder **5** to be converted to first circularly polarized light C**1**. A part (e.g., substantially 50%) of the first circularly polarized light C**1** resulting from transmission through the first retarder **5** is transmitted through the semitransmissive mirror **6**. The first circularly polarized light C**1** transmitted through the semitransmissive mirror **6** is then transmitted through the second retarder **7** to be converted to second linearly polarized light L**2** (in other words, p-polarized light) having a polarization direction perpendicular to the polarization direction of the first linearly polarized light L**1**. The second linearly polarized light L**2** is incident on the reflective polarizer **8**. As described above, the reflective polarizer **8** reflects p-polarized light and transmits s-polarized light. The second linearly polarized light L**2** incident on the reflective polarizer **8** is reflected by the reflective polarizer **8** to be converted to third linearly polarized light L**3**. The third linearly polarized light L**3** is transmitted through the second retarder **7** to be converted to second circularly polarized light C**2**. A part (e.g., substantially 50%) of the second circularly polarized light C**2** resulting from transmission through the second retarder **7** is reflected by the semitransmissive mirror **6** to be converted to third circularly polarized light C**3**. The third circularly polarized light C**3** is transmitted through the second retarder **7** to be converted to fourth linearly polarized light L**4** (in other words, s-polarized light) having a polarization direction parallel to the

polarization direction of the first linearly polarized light L**1**. The fourth linearly polarized light L**4** is transmitted through the reflective polarizer **8** and emitted outside. The amount (luminance) of light emitted from the display device **1** is, for example, substantially 25% of the amount (luminance) of the display light emitted from the display panel **2**.

[0082] The first retarder **5**, the semitransmissive mirror **6**, the second retarder **7**, and the reflective polarizer **8** are held by a holder (not illustrated) to maintain their relative positions. The first retarder **5** and the second retarder **7** are spaced from each other with air between the first retarder **5** and the second retarder **7** (more specifically, the first retarder **5** and the semitransmissive mirror **6** are spaced from each other with air between the first retarder **5** and the semitransmissive mirror **6**, and the semitransmissive mirror **6** and the second retarder **7** are spaced from each other with air between the semitransmissive mirror **6** and the second retarder **7**). The display device **1** includes no member made of a resin material, such as a polymer, between the first retarder **5** and the second retarder **7**. This can eliminate the likelihood of, for example, deformation of the semitransmissive mirror **6** or misalignment between the semitransmissive mirror **6** and the first retarder **5** or between the semitransmissive mirror **6** and the second retarder **7** that may occur when a resin material is cured in the manufacturing process of the display device **1**. The resin material, such as a polymer, has retardation specific to the material. The above structure can thus also eliminate the likelihood that such a resin material changes the polarization state of light transmitted through the resin material. This can reduce deterioration in display quality.

[0083] The optical system **3** is a single-axis (on-axis) optical system in which the optical axis of incident light is substantially aligned with the optical axis of emitted light. The optical system **3** thus uses a smaller space, allowing the display device **1** to be smaller. The single-axis optical system **3** can reduce, for example, distortion or uneven luminance of the virtual image V viewed by the user **22**. This also facilitates the design of the optical system **3**.

[0084] In the display device **1**, the optical path length of light emitted from the display panel **2**, transmitted through the semitransmissive mirror **6**, reflected by the reflective polarizer **8**, and reaching the semitransmissive mirror **6** may be shorter than the focal length of the semitransmissive mirror **6**. This structure allows the user **22** to view the virtual image V. In the display device **1**, the optical path length of light emitted from the display panel **2**, transmitted through the semitransmissive mirror **6**, reflected by the reflective polarizer **8**, and reaching the semitransmissive mirror **6** may be longer than the focal length of the semitransmissive mirror **6**. This structure allows the user **22** to view the real image.

[0085] In FIG. **2**, for ease of illustration, the optical path of light incident on the reflective polarizer **8** and the optical path of light reflected by the reflective polarizer **8** are shifted from each other in the height direction (Y-direction). The optical path of light incident on the semitransmissive mirror **6** and the optical path of light reflected by the semitransmissive mirror **6** are also shifted from each other in the height direction (Y-direction). However, the display light emitted from the display panel **2** actually travels substantially along a single axis as illustrated in FIG. **37**. FIGS. **3** to **5**, **9**, **15**, **16**, **20** to **22**, **24**, and **30** to **32** illustrate the optical path in the same or a similar manner.

[0086] As illustrated in FIG. **38**, the display device **1** may include a convex lens **42** in place of the first retarder **5**, the semitransmissive mirror **6**, the second retarder **7**, and the reflective polarizer **8**. In the display device **1**, the optical path length from the display panel **2** to the convex lens **42** may be shorter than the focal length of the convex lens **42**. This structure allows the user **22** to view the virtual image V. In the display device **1**, the optical path length from the display panel **2** to the convex lens **42** may be longer than the focal length of the convex lens **42**. This structure allows the user **22** to view the real image.

[0087] The display panel **2** may display a composite image including a left-eye image and a right-eye image having parallax between these images, and may emit display light of the composite image. As illustrated in FIG. **3**, the display device **1** may include an optical element **9** located on the optical path of the display light emitted from the display panel **2**. The optical element **9** is configured to cause a part of the display light of the composite image to reach one of the left eye or the right eye of the user **22** and cause another part of the display light to reach the other of the left eye or the right eye of the user **22**. The optical element **9** is configured to define the traveling direction of the display light of the left-eye image and the traveling direction of the display light of the right-eye image to cause at least a part of the display light of the left-eye image to reach the left eye of the user **22** and cause at least a part of the display light of the right-eye image to reach the right eye of the user **22**. The display device **1** thus allows the user **22** to view a stereoscopic image.

[0088] The optical element **9** may have any structure that causes a part of the display light of the composite image to reach one of the left eye or the right eye of the user **22** and causes another part of the display light to reach the other of the left eye or the right eye of the user **22**. For example, the optical element **9** may be a parallax barrier or a lenticular lens. The parallax barrier may be a liquid crystal panel. The optical element **9** may be at any position in the display device **1**. The optical element **9** may be located between the display panel **2** and the first retarder **5**, may be located downstream from the reflective polarizer **8** in the emission direction of the display light, or may be located between the semitransmissive mirror **6** and the second retarder **7**.

[0089] A display device according to another embodiment of the present disclosure will now be described. The display device according to the present embodiment differs from the display device according to the above embodiment in the structure of the optical system. The other components that are the same as or similar to the components of the display device according to the above embodiment are denoted by the same reference numerals and will not be described in detail.

[0090] In the present embodiment, as illustrated in FIG. **4**, a display device **1**A includes the display panel **2** and an optical system **10**. The display panel **2** includes the display surface **2***a* to display an image. The optical system **10** projects display light emitted from the display panel **2** in the field of view of the user **22** as the virtual image V.

[0091] The optical system **10** includes a first semitransmissive mirror **11**, a first retarder **12**, a second semitransmissive mirror **13**, a second retarder **14**, and a polarizer **15**. The first semitransmissive mirror **11**, the first retarder **12**, the second semitransmissive mirror **13**, the second retarder **14**,

and the polarizer **15** are arranged in this order in the emission direction of the display light from the display panel **2**.

[0092] The first retarder **12** faces a reflective surface **11***a* of the first semitransmissive mirror **11**. The first retarder **12** is spaced from the display surface **2***a* in the emission direction of the display light from the display panel **2**. The second retarder **14** is spaced from the first retarder **12** in the emission direction of the display light. The first retarder **12** and the second retarder **14** are quarter-wave plates.

[0093] The first semitransmissive mirror **11** is located between the display panel **2** and the first retarder **12**. The first semitransmissive mirror **11** may transmit a part of incident light and reflect the remaining part. As illustrated in FIG. **4**, the first semitransmissive mirror **11** is a concave mirror including a concave reflective surface **11***a* facing the first retarder **12**. In the present embodiment, the first semitransmissive mirror **11** may be configured to transmit s-polarized light and reflect p-polarized light. The reflective surface **11***a* of the first semitransmissive mirror **11** may at least partly have a spherical shape, an aspherical shape, or a freeform shape.

[0094] The first semitransmissive mirror **11** may include, for example, a substrate and multiple thin metal wires (a metal nanowire grid) on a surface of the substrate. The substrate may have a transmittance of 100% or substantially 100% to light in the visible light region. The substrate may be made of, for example, a resin material or a glass material. The resin material may be, for example, an acrylic resin or a polycarbonate resin. The thin metal wires may be made of a metal material such as aluminum, chromium, or titanium oxide. The thin metal wires may be arranged in one direction. The first semitransmissive mirror **11** can transmit an optical component vibrating in a direction perpendicular to the grid, and reflect an optical component vibrating in a direction parallel to the grid. The metal nanowire grid may be on the surface of the substrate adjacent to the first retarder **12**. Note that, although the first semitransmissive mirror **11** includes the metal nanowire grid to function as a reflective polarizer in this example, the first semitransmissive mirror **11** may simply be a semitransparent mirror, with a reflective polarizer being separate from the first semitransmissive mirror **11**.

[0095] The second semitransmissive mirror **13** is located between the first retarder **12** and the second retarder **14**. The second semitransmissive mirror **13** may transmit a part (e.g., substantially 50%) of incident light and reflect the remaining part (e.g., substantially 50%). As illustrated in FIG. **4**, the second semitransmissive mirror **13** may be a plane mirror including a reflective surface **13***a* facing the first retarder **12**. The second semitransmissive mirror **13** is also referred to as a plane semitransparent mirror. As illustrated in FIG. **31**, the second semitransmissive mirror **13** may be integral with at least one of the first retarder **12** or the second retarder **14**.

[0096] The second semitransmissive mirror **13** may include, for example, a substrate and a semitransmissive reflective layer on a surface of the substrate. The substrate may have a transmittance of 100% or substantially 100% to light in the visible light region. The substrate may be made of, for example, inorganic glass or a resin material. The resin material may be, for example, an acrylic resin or a polycarbonate resin. The semitransmissive reflective layer may be a metal thin film. The metal thin film may be made of a metal material such as aluminum or chromium. The semitransmissive reflective layer is not limited to a metal thin film, and may be, for example, a dielectric multilayer film.

[0097] The polarizer **15** faces the surface of the second retarder **14** opposite to the surface facing the second semitransmissive mirror **13**. In other words, the polarizer **15** is located downstream from the second retarder **14** in the emission direction of the display light from the display panel **2**. The polarizer **15** may transmit a part of incident light and absorb the remaining part. In the present embodiment, the polarizer **15** is configured to transmit p-polarized light and absorb s-polarized light. As illustrated in FIG. **31**, the polarizer **15** may be integral with the second retarder **14**.

[0098] The polarizer **15** may be any of known absorptive polarizers. Examples of the known absorptive polarizers may include an iodine polarizer including a polyvinyl alcohol (PVA) film with an oriented iodine compound adsorbed or a dye polarizer including a PVA film with an oriented dichromatic organic dye adsorbed.

[0099] The optical function of the optical system **10** will now be described. The s-polarized light (first linearly polarized light L**1**) as the display light emitted from the display panel **2** is transmitted through the first semitransmissive mirror **11**. The first linearly polarized light L**1** as the display light is transmitted through the first retarder **12** to be converted to first circularly polarized light C**1**. The first circularly polarized light C**1** is incident on the second semitransmissive mirror **13**. A part (e.g., substantially 50%) of the first circularly polarized light C**1** is reflected by the second semitransmissive mirror **13** to be converted to second circularly polarized light C**2**. The second circularly polarized light C**2** is transmitted through the first retarder **12** to be converted to second linearly polarized light L**2** (in other words, p-polarized light) having a polarization direction perpendicular to the polarization direction of the first linearly polarized light L**1**. The second linearly polarized light L**2** is reflected by the first semitransmissive mirror **11** to be converted to third linearly polarized light L**3** having a polarization direction perpendicular to the polarization direction of the first linearly polarized light L**1**. The third linearly polarized light L**3** is transmitted through the first retarder **12** to be converted to third circularly polarized light C**3**. A part (e.g., substantially 50%) of the third circularly polarized light C**3** is transmitted through the second semitransmissive mirror **13**. The third circularly polarized light C**3** transmitted through the second semitransmissive mirror **13** is then transmitted through the second retarder **14** to be converted to fourth linearly polarized light L**4** (in other words, p-polarized light) having a polarization direction perpendicular to the polarization direction of the first linearly polarized light L**1**. The fourth linearly polarized light L**4** is transmitted through the polarizer **15** and emitted outside.

[0100] The remaining part (e.g., substantially 50%) of the first circularly polarized light C**1** is transmitted through the second semitransmissive mirror **13** and then through the second retarder **14** to be converted to fifth linearly polarized light L**5** (in other words, s-polarized light) having a polarization direction parallel to the polarization direction of the first linearly polarized light L**1**. The fifth linearly polarized light L**5** is absorbed by the polarizer **15** rather than being emitted outside. In other words, the fifth linearly polarized light L**5** has a lower transmittance through the polarizer **15**. The amount (luminance) of light emitted from the display

device **1**A is, for example, substantially 25% of the amount (luminance) of the display light emitted from the display panel **2**.

[0101] Note that, although the first retarder **12** and the second retarder **14** are quarter-wave plates in the above example, the first retarder **12** and the second retarder **14** may be, for example, waveplates other than quarter-wave plates or a combination of a quarter-wave plate and another waveplate that allows a part of light to be absorbed by the polarizer **15** and another part of the light to be transmitted through the polarizer **15**. The first retarder **12** and the second retarder **14** may be, for example, waveplates other than quarter-wave plates or a combination of a quarter-wave plate and another waveplate that allows a part of light to be reflected by the first semitransmissive mirror **11** and another part of the light to be transmitted through the first semitransmissive mirror **11**.

[0102] The first semitransmissive mirror **11**, the first retarder **12**, the second semitransmissive mirror **13**, the second retarder **14**, and the polarizer **15** are held by a holder (not illustrated) to maintain their relative positions. The first semitransmissive mirror **11** and the first retarder **12** are spaced from each other with air between the first semitransmissive mirror **11** and the first retarder **12**. The display device **1**A includes no member made of a resin material, such as a polymer, between the first semitransmissive mirror **11** and the first retarder **12**. This can eliminate the likelihood of, for example, deformation of the first semitransmissive mirror **11** or misalignment between the first semitransmissive mirror **11** and the first retarder **12** that may occur when a resin material is cured in the manufacturing process of the display device **1**A. This can reduce deterioration in display quality.

[0103] The optical system **10** is a single-axis (on-axis) optical system in which the optical axis of incident light is substantially aligned with the optical axis of emitted light. The optical system **10** thus uses a smaller space, allowing the display device **1**A to be smaller. The single-axis optical system **10** can reduce, for example, distortion or uneven luminance of the virtual image V viewed by the user **22**. This also facilitates the design of the optical system **10**.

[0104] The display device **1**A may include the optical element **9** in the same manner as or in a similar manner to the display device **1**. With this structure, the display device **1**A allows the user **22** to view the stereoscopic image. The optical element **9** may be located between the display panel **2** and the first semitransmissive mirror **11**, may be located downstream from the polarizer **15** in the emission direction of the display light, or may be located between the first semitransmissive mirror **11** and the first retarder **12**.

[0105] Another example of the display device **1**A will now be described. A display device **1**A' in this example differs from the display device **1**A described above in the structure (shape) of the second semitransmissive mirror. The other components that are the same as or similar to the components of the display device **1**A are denoted by the same reference numerals and will not be described in detail.

[0106] In this example, as illustrated in FIG. **5**, the display device **1**A' includes the display panel **2** and the optical system **10**. The optical system **10** includes the first semitransmissive mirror **11**, the first retarder **12**, a second semitransmissive mirror **13'**, the second retarder **14**, and the polarizer **15**. The first semitransmissive mirror **11**, the first retarder **12**, the second semitransmissive mirror **13'**, the second retarder **14**, and the polarizer **15** are arranged in this order in the emission direction of the display light from the display panel **2**.

[0107] The second semitransmissive mirror **13'** includes a convex reflective surface **13'***a* facing the first retarder **12**. The second semitransmissive mirror **13'** is also referred to as a convex semitransparent mirror. The second semitransmissive mirror **13'** may transmit a part (e.g., substantially 50%) of incident light and reflect the remaining part (e.g., substantially 50%).

[0108] The second semitransmissive mirror **13'** may include, for example, a substrate and a semitransmissive reflective layer on a surface of the substrate. The substrate may have a transmittance of 100% or substantially 100% to light in the visible light region. The substrate may be made of, for example, inorganic glass or a resin material. The resin material may be, for example, an acrylic resin or a polycarbonate resin. The semitransmissive reflective layer may be a metal thin film. The metal thin film may be made of a metal material such as aluminum or chromium. The semitransmissive reflective layer is not limited to a metal thin film, and may be, for example, a dielectric multilayer film.

[0109] In the optical system **10**, the focal length of the second semitransmissive mirror **13'** may be longer than the distance between the display panel **2** and the second semitransmissive mirror **13'**. In other words, the optical system **10** may be configured to project a virtual image Q' (refer to FIG. **7**) that is a reduced image of an object (specifically, the display surface **2***a*) onto the second semitransmissive mirror **13'**. Further, in the optical system **10**, the focal length of the first semitransmissive mirror **11** may be longer than the distance between the virtual image Q' and the first semitransmissive mirror **11**. In other words, the optical system **10** may be configured to project the virtual image V that is a magnified image of an object (specifically, the virtual image Q') onto the first semitransmissive mirror **11**. This structure can reduce the thickness of the optical system **10** in the depth direction (Z-direction), and also allows adjustment of the magnification factor and the projection distance of the virtual image V.

[0110] The first semitransmissive mirror **11**, the first retarder **12**, the second semitransmissive mirror **13'**, the second retarder **14**, and the polarizer **15** are held by a holder (not illustrated) to maintain their relative positions. The first semitransmissive mirror **11** and the first retarder **12** are spaced from each other with air between the first semitransmissive mirror **11** and the first retarder **12**. The display device **1**A' includes no member made of a resin material, such as a polymer, between the first semitransmissive mirror **11** and the first retarder **12**. This can eliminate the likelihood of, for example, deformation of the first semitransmissive mirror **11** or misalignment between the first semitransmissive mirror **11** and the first retarder **12** that may occur when a resin material is cured in the manufacturing process of the display device **1**A'. This can reduce deterioration in display quality.

[0111] The optical system **10** is a single-axis (on-axis) optical system in which the optical axis of incident light is substantially aligned with the optical axis of emitted light. The optical system **10** thus uses a smaller space, allowing the display device **1**A' to be smaller. The single-axis optical system **10** can reduce, for example, distortion or uneven luminance of the virtual image V viewed by the user **22**. This also facilitates the design of the optical system **10**.

[0112] The display device **1**A' may include the optical element **9**. This structure allows the user **22** to view a stereoscopic virtual image V.

[0113] In this example, the optical system **10** can be thinner in the depth direction (Z-direction), thus allowing the display device **1**A' to be thinner. Achieving the thinner optical system **10** will now be described with reference to FIGS. **6** and **7**. Note that, in the display device **1**A or **1**A', the reflective surface **11***a* of the first semitransmissive mirror **11** that reflects the display light to be emitted outside is concave. The first semitransmissive mirror **11** may thus be hereafter referred to as a concave mirror. In the display device **1**A, the reflective surface **13***a* of the second semitransmissive mirror **13** that reflects the display light to be emitted outside is planar. The second semitransmissive mirror **13** may thus be hereafter referred to as a plane mirror. In the display device **1**A', the reflective surface **13**'*a* of the second semitransmissive mirror **13**' that reflects the display light to be emitted outside is convex. The second semitransmissive mirror **13**' may thus be hereafter referred to as a convex mirror. The dimension of the optical system **10** in the depth direction (Z-direction) may be referred to as the thickness of the optical system **10**.

[0114] FIG. **6** is a diagram describing projection of the virtual image V in the display device **1**A. FIG. **6** does not illustrate the illuminator **4** and the optical members (the first retarder **12**, the second retarder **14**, and the polarizer **15**) that do not contribute to the projection distance of the virtual image V (virtual image distance) or do not contribute to the magnification factor of the virtual image V. In the figure, the concave mirror **11** is in contact with the display panel **2** to define the distance between the concave mirror **11** and the display panel **2** to be substantially "zero". In the example described below, the focal length of the concave mirror **11** is denoted by f. The distance between the concave mirror **11** and the plane mirror **13** is denoted by a/**2**. The distance a/**2** corresponds to the thickness of the optical system **10** in the display device **1**A.

[0115] The display device **1**A is configured to magnify, using the concave mirror **11**, a virtual image Q of the display surface **2***a* produced with the plane mirror **13**, and to project the magnified image as the virtual image V. As illustrated in FIG. **6**, the virtual image Q is located opposite to the concave mirror **11** from the plane mirror **13**, and is located at the distance a/**2** from the plane mirror **13**. The virtual image Q is an image of the display surface **2***a* at the magnification of 1× (actual size).

[0116] A virtual image distance b of the virtual image V and a virtual image magnification factor m of the virtual image V are respectively expressed by Formulas 1 and 2 below. Note that the virtual image distance b is the distance between the virtual image V and the concave mirror **11**. The virtual image magnification factor m is the magnification factor by which the display surface **2***a* is magnified to form the virtual image V.

$$b = 1/(1/a - 1/f) \tag{1}$$

$$m = b/a \tag{2}$$

TABLE 1

Example structure	Focal length f	Thickness a/2	Virtual image distance b	Virtual image magnification factor m
1	200	50	200	2.0
2	101	33.5	200	3.0

[0117] Table 1 shows example structures 1 and 2 of the display device **1**A. Table 1 shows the focal length f, the thickness a/**2**, and the virtual image distance b in "mm". In example structures 1 and 2, the virtual image distance b is 200 mm, and the virtual image magnification factor m is 2 or 3. As shown in Table 1, when the optical system **10** includes the plane mirror **13**, the optical system **10** has the thickness a/**2** of 50 mm for the virtual image distance b being 200 mm and the virtual image magnification factor m being 2 (refer to example structure 1), and has the thickness a/**2** of 33.5 mm for the virtual image distance b being 200 mm and the virtual image magnification factor m being 3 (refer to example structure 2).

[0118] FIG. **7** is a diagram describing projection of the virtual image V in the display device **1**A'. FIG. **7** does not illustrate the illuminator **4** and the optical members (the first retarder **12**, the second retarder **14**, and the polarizer **15**) that do not contribute to the projection distance of the virtual image V (virtual image distance) or do not contribute to the magnification factor of the virtual image V. In the figure, the concave mirror **11** is in contact with the display panel **2** to define the distance between the concave mirror **11** and the display panel **2** to be substantially "zero". In the example described below, the focal length of the convex mirror **13**' is denoted by f. The focal length of the concave mirror **11** is denoted by f". The distance between the concave mirror **11** and the convex mirror **13**' is denoted by a'/**2**. The distance a'/**2** corresponds to the thickness of the optical system **10** in the display device **1**A'.

[0119] The display device **1**A' is configured to magnify, using the concave mirror **11**, the virtual image Q' of the display surface **2***a* produced with the convex mirror **13**', and to project the magnified image as the virtual image V. As illustrated in FIG. **7**, the virtual image Q' is located opposite to the concave mirror **11** from the convex mirror **13**'. A distance b' between the virtual image Q' and the convex mirror **13**' is expressed by Formula 3 below. A magnification factor m' by which the display surface **2***a* is magnified to form the virtual image Q' is expressed by Formula 4 below. As expressed by Formula 3, b' <a'/**2**, and the magnification factor m' for the virtual image Q' is less than 1. The virtual image Q' is thus an image of the display surface **2***a* being reduced.

$$b' = 1/\{1/f' + 1/(a'/2)\} \tag{3}$$

$$m' = b'/(a'/2) \tag{4}$$

[0120] A virtual image distance b" of the virtual image V and a virtual image magnification factor m" of the virtual image V are respectively expressed by Formulas 5 and 6 below. Note that the virtual image distance b" is the distance between the virtual image V and the concave mirror **11**. The

virtual image magnification factor m" is the magnification factor by which the display surface **2***a* is magnified to form the virtual image V.

$$b'' = 1/\{1/(a'/2 + b') - 1/f''\} \tag{5}$$
$$m'' = (b'/(a'/2)) \times b''/(a'/2 + b')$$

[0121] Table 2 shows example structures 3 and 4 of the display device **1**A'. Table 2 shows the focal lengths f and f", the thickness a'/**2**, and the virtual image distance b" in "mm". In example structures 3 and 4, the virtual image distance b" is 200 mm, and the virtual image magnification factor m" is 2 or 3, as in example structures 1 and 2. As shown in Table 2, when the optical system **10** includes the convex mirror **13**', the optical system **10** has the thickness a'/**2** of 32 mm for the virtual image distance b" being 200 mm and the virtual image magnification factor m" being 2 as in example structure 1 (refer to example structure 3), and has the thickness a'/**2** of 25.5 mm for the virtual image distance b" being 200 mm and the virtual image magnification factor m" being 3 as in example structure 2 (refer to example structure 4). The optical system **10** can thus be thinner, allowing the display device **1**A' to be thinner.

TABLE 2

Example structure	Focal length f'	Focal length f"	Thickness a'/2	Virtual image distance b"	Virtual image magnification factor m"
3	28.4	61.5	32	200	2.0
4	39.3	51.5	25.5	200	3.0

[0122] When the value of each of the virtual image distance b", the virtual image magnification factor m", and the thickness a'/**2** is given, the optical system **10** in the display device **1**A' can be designed to achieve the given values.

[0123] The design of the optical system **10** in the display device **1**A' will now be described with reference to FIG. **8**. FIG. **8** does not illustrate the illuminator **4**, the first retarder **12**, the second retarder **14**, and the polarizer **15**, as in FIG. **7**. In the figure, the concave mirror **11** is in contact with the display panel **2** to define the distance between the concave mirror **11** and the display panel **2** to be substantially "zero". In the example described below, the thickness of the optical system **10** is denoted by a**1**, the distance between the convex mirror **13**' and the virtual image Q'is denoted by b**1**, and the distance between the concave mirror **11** and the virtual image V is denoted by b**2**. The magnification factor by which the display surface **2***a* is magnified to form the virtual image Q' is denoted by m**1**. The magnification factor by which the virtual image Q' is magnified to form the virtual image Vis denoted by m**2**. Further, the focal length of the convex mirror **13**' is denoted by f**1**. The focal length of the concave mirror **11** is denoted by f**2**.

[0124] As expressed by Formula 7 below, a magnification factor M by which the display surface **2***a* is magnified to form the virtual image V is the product of the magnification factor m**1** and the magnification factor m**2**. The distance a**2** between the concave mirror **11** and the virtual image Q' is the sum of the thickness al and the distance b**1**, as expressed by Formula 8 below.

$$M = m1 \times m2 \tag{7}$$
$$a2 = a1 + b1 \tag{8}$$

[0125] The magnification factor M is expressed by Formula 9 below, where the thickness al of the optical system **10** is defined as T, and the virtual image distance (specifically, the distance b**1** between the concave mirror **11** and the virtual image V) is defined as D.

$$M = m1 \times m2 \tag{9}$$
$$= (b1/a1) \times (b2/a2)$$
$$= (b1/T) \times (D/a2)$$

[0126] Formula 10 below that holds for the distance b**1** between the convex mirror **13**' and the virtual image Q' can be substituted into Formula 9 to obtain Formula 11 below.

$$1/a1 = 1/b1 + 1/f1 \tag{10}$$
$$M = f1 \times (1 + D/f2)/(T + f1) \tag{11}$$

[0127] Formula 12 below that holds for the distance b**2** between the concave mirror **11** and the virtual image V can be substituted into Formula 8 to obtain Formula 13 below.

$$1/a2 = 1/b2 + 1/f2 \tag{12}$$
$$D \times f2/(D + f2) = T + T \times f1/(T + f1) \tag{13}$$

[0128] Using formulas 9 and 13, the focal length f**1** of the convex mirror **13**' and the focal length f**2** of the concave mirror **11** are obtained as expressed by formulas 14 and 15 below.

[0129] Note that A in Formula 15 is expressed by Formula 16 below.

$$f1 = M \times T \times T/(D - 2 \times M \times T) \tag{14}$$
$$f2 = D \times A/(M - A) \tag{15}$$
$$A = f1/(T + f1) \tag{16}$$

[0130] As expressed by the above calculations, when the value of each of the magnification factor M, the thickness T, and the virtual image distance D is given for the display device **1**A', the focal lengths f**1** and f**2** can be determined (in other words, the optical system **10** can be designed) to achieve the given values.

[0131] In the display device **1**A or **1**A', the optical path length of light emitted from the display panel **2**, transmitted through the first semitransmissive mirror **11**, reflected by the second semitransmissive mirror **13** or **13**', and reaching the first semitransmissive mirror **11** may be shorter than the focal length of the first semitransmissive mirror **11**. This structure allows the user **22** to view the virtual image V. In

the display device **1**A or **1**A', the optical path length of light emitted from the display panel **2**, transmitted through the first semitransmissive mirror **11**, reflected by the second semitransmissive mirror **13** or **13'**, and reaching the first semitransmissive mirror **11** may be longer than the focal length of the first semitransmissive mirror **11**. This structure allows the user **22** to view the real image.

[0132] A display device according to still another embodiment of the present disclosure will now be described. The display device according to the present embodiment differs from the display device according to the above embodiment in the structure of the optical system. The other components that are the same as or similar to the components of the display device according to the above embodiment are denoted by the same reference numerals and will not be described in detail.

[0133] In the present embodiment, as illustrated in FIG. **9**, a display device **1**B includes the display panel **2** and an optical system **16**.

[0134] The optical system **16** includes a first semitransmissive mirror **17**, a first retarder **18**, a second semitransmissive mirror **19**, a second retarder **20**, and a third semitransmissive mirror **21**. The first semitransmissive mirror **17**, the first retarder **18**, the second semitransmissive mirror **19**, the second retarder **20**, and the third semitransmissive mirror **21** are arranged in this order in the emission direction of the display light from the display panel **2**.

[0135] The first retarder **18** faces a reflective surface **17***a* of the first semitransmissive mirror **17**. The first retarder **18** is spaced from the display surface **2***a* in the emission direction of the display light from the display panel **2**. The second retarder **20** is spaced from the first retarder **12** in the emission direction of the display light. The first retarder **18** and the second retarder **20** are quarter-wave plates.

[0136] The first semitransmissive mirror **17** is located between the display panel **2** and the first retarder **18**. The first semitransmissive mirror **17** may transmit a part of incident light and reflect the remaining part. In the present embodiment, the first semitransmissive mirror **17** may be configured to transmit s-polarized light and reflect p-polarized light. As illustrated in FIG. **9**, the first semitransmissive mirror **17** may be a concave mirror including a concave reflective surface **17***a* facing the first retarder **18**. The reflective surface **17***a* of the first semitransmissive mirror **17** may at least partly have a spherical shape, an aspherical shape, or a freeform shape.

[0137] The first semitransmissive mirror **17** includes, for example, a substrate and multiple thin metal wires (a metal nanowire grid) on a surface of the substrate. The substrate may have a transmittance of 100% or substantially 100% to light in the visible light region. The substrate may be made of, for example, a resin material or a glass material. The resin material may be, for example, an acrylic resin or a polycarbonate resin. The thin metal wires may be made of a metal material such as aluminum, chromium, or titanium oxide. The thin metal wires may be arranged in one direction. The first semitransmissive mirror **17** can transmit an optical component vibrating in a direction perpendicular to the grid, and reflect an optical component vibrating in a direction parallel to the grid. The metal nanowire grid may be on the surface of the substrate facing the first retarder **18**. Note that, although the first semitransmissive mirror **11** includes the metal nanowire grid to function as a reflective polarizer in this example, the first semitransmissive mirror **11** may simply be a semitransparent mirror, with a reflective polarizer being separate from the first semitransmissive mirror **11**.

[0138] The second semitransmissive mirror **19** is located between the first retarder **18** and the second retarder **20**. The second semitransmissive mirror **13** may transmit a part (e.g., substantially 50%) of incident light and reflect the remaining part (e.g., substantially 50%). As illustrated in FIG. **9**, the second semitransmissive mirror **19** may be a plane mirror including a reflective surface **19***a* facing the first retarder **18** and a reflective surface **19***b* facing the second retarder **20**. The second semitransmissive mirror **19** is also referred to as a plane semitransparent mirror. As illustrated in FIG. **32**, the second semitransmissive mirror **19** may be integral with at least one of the first retarder **18** or the second retarder **20**.

[0139] The second semitransmissive mirror **19** may include, for example, a substrate and a semitransmissive layer on a surface of the substrate. The substrate may have a transmittance of 100% or substantially 100% to light in the visible light region. The substrate may be made of, for example, inorganic glass or a resin material. The resin material may be, for example, an acrylic resin or a polycarbonate resin. The semitransmissive layer may be a metal thin film. The metal thin film may be made of a metal material such as aluminum or chromium. The semitransmissive layer is not limited to a metal thin film, and may be, for example, a dielectric multilayer film. The first retarder **18** and the second retarder **20** may be fixed to the second semitransmissive mirror **19** with an optically transparent adhesive, such as an OCA. The adhesive may be a material with small retardation.

[0140] The third semitransmissive mirror **21** faces the surface of the second retarder **20** opposite to the surface facing the second semitransmissive mirror **19**. The third semitransmissive mirror **21** is located downstream from the second retarder **20** in the emission direction of the display light from the display panel **2**. The third semitransmissive mirror **21** may transmit a part of incident light and reflect the remaining part. In the present embodiment, the third semitransmissive mirror **21** may be configured to reflect s-polarized light and transmit p-polarized light. As illustrated in FIG. **9**, the third semitransmissive mirror **21** may be a concave mirror including a concave reflective surface **21***a* facing the second retarder **20**. The reflective surface **21***a* of the third semitransmissive mirror **21** may at least partly have a spherical shape, an aspherical shape, or a freeform shape.

[0141] The third semitransmissive mirror **21** includes, for example, a substrate and multiple thin metal wires (a metal nanowire grid) on a surface of the substrate. The substrate may have a transmittance of 100% or substantially 100% to light in the visible light region. The substrate may be made of, for example, a resin material or a glass material. The resin material may be, for example, an acrylic resin or a polycarbonate resin. The thin metal wires may be made of a metal material such as aluminum, chromium, or titanium oxide. The thin metal wires may be arranged in one direction. The third semitransmissive mirror **21** can transmit an optical component vibrating in a direction perpendicular to the grid, and reflect an optical component vibrating in a direction parallel to the grid. The metal nanowire grid may be on the surface of the substrate facing the second retarder **20**. Note that, although the third semitransmissive mirror **21** includes the metal nanowire grid to function as a reflective polarizer in this example, the third semitransmissive mirror

21 may simply be a semitransparent mirror, with a reflective polarizer being separate from the third semitransmissive mirror **21**.

[0142] The optical function of the optical system **16** will now be described. In the display device **1**B, the display light emitted from the display panel **2** may travel along a path Pl or a path P**2** to be emitted outside. The light traveling along the path P**1** will be described first. The s-polarized light (first linearly polarized light L**1**) as the display light emitted from the display panel **2** is transmitted through the first semitransmissive mirror **17**. The first linearly polarized light L**1** is transmitted through the first retarder **18** to be converted to first circularly polarized light C**1**. The first circularly polarized light C**1** is incident on the second semitransmissive mirror **19**. A part (e.g., substantially 50%) of the first circularly polarized light C**1** is reflected by the second semitransmissive mirror **19** to be converted to second circularly polarized light C**2**. The second circularly polarized light C**2** is transmitted through the first retarder **18** to be converted to second linearly polarized light L**2** (in other words, p-polarized light) having a polarization direction perpendicular to the polarization direction of the first linearly polarized light L**1**. The second linearly polarized light L**2** is reflected by the first semitransmissive mirror **17** to be converted to third linearly polarized light L**3** (in other words, p-polarized light) having a polarization direction perpendicular to the polarization direction of the first linearly polarized light L**1**. The third linearly polarized light L**3** is transmitted through the first retarder **18** to be converted to third circularly polarized light C**3**. The third circularly polarized light C**3** is incident on the second semitransmissive mirror **19**. A part (e.g., substantially 50%) of the third circularly polarized light C**3** is transmitted through the second semitransmissive mirror **19**. The third circularly polarized light C**3** transmitted through the second semitransmissive mirror **19** is then transmitted through the second retarder **20** to be converted to fourth linearly polarized light L**4** (in other words, p-polarized light) having a polarization direction perpendicular to the polarization direction of the first linearly polarized light L**1**. The fourth linearly polarized light L**4** is transmitted through the third semitransmissive mirror **21** and emitted outside.

[0143] The light traveling along the path P**2** will now be described. The remaining part (e.g., substantially 50%) of the first circularly polarized light C**1** incident on the second semitransmissive mirror **19** is transmitted through the second semitransmissive mirror **19**. The first circularly polarized light C**1** transmitted through the second semitransmissive mirror **19** is then transmitted through the second retarder **20** to be converted to fifth linearly polarized light L**5** (in other words, s-polarized light) having a polarization direction parallel to the polarization direction of the first linearly polarized light L**1**. The fifth linearly polarized light L**5** is reflected by the third semitransmissive mirror **21** to be converted to sixth linearly polarized light L**6** (in other words, s-polarized light) having a polarization direction parallel to the polarization direction of the first linearly polarized light L**1**. The sixth linearly polarized light L**6** is transmitted through the second retarder **20** to be converted to fourth circularly polarized light C**4**. The fourth circularly polarized light C**4** is incident on the second semitransmissive mirror **19**. A part (e.g., substantially 50%) of the fourth circularly polarized light C**4** is reflected by the second semitransmissive mirror **19** to be converted to fifth circularly polarized light C**5**. The fifth circularly polarized light C**5** is transmitted through the second retarder **20** to be converted to seventh linearly polarized light L**7** (in other words, p-polarized light) having a polarization direction perpendicular to the polarization direction of the first linearly polarized light L**1**. The seventh linearly polarized light L**7** is transmitted through the third semitransmissive mirror **21** and emitted outside.

[0144] As described above, in the display device **1**B, the display light emitted from the display panel **2** travels along the path P**1** or the path P**2** to be emitted outside. The amount (luminance) of light emitted from the display device **1**B is, for example, substantially 50% of the amount (luminance) of the display light emitted from the display panel **2**. The display device **1**B can thus have higher light use efficiency and higher luminance of light emitted outside.

[0145] Note that, although the first retarder **18** and the second retarder **20** are quarter-wave plates in the above example, the first retarder **18** and the second retarder **20** may be, for example, waveplates other than quarter-wave plates or a combination of a quarter-wave plate and another waveplate that allows a part of light to be reflected by the first semitransmissive mirror **17** and another part of the light to be transmitted through the first semitransmissive mirror **17**. The first retarder **18** and the second retarder **20** may be, for example, waveplates other than quarter-wave plates or a combination of a quarter-wave plate and another waveplate that allows a part of light to be reflected by the third semitransmissive mirror **21** and another part of the light to be transmitted through the third semitransmissive mirror **21**.

[0146] The first semitransmissive mirror **17**, the first retarder **18**, the second semitransmissive mirror **19**, the second retarder **20**, and the third semitransmissive mirror **21** are held by a holder (not illustrated) to maintain their relative positions. The first semitransmissive mirror **17** and the first retarder **18** are spaced from each other with air between the first semitransmissive mirror **17** and the first retarder **18**. The third semitransmissive mirror **21** and the second retarder **20** are spaced from each other with air between the third semitransmissive mirror **21** and the second retarder **20**. The display device **1**B includes no member made of a resin material, such as a polymer, between the first semitransmissive mirror **17** and the first retarder **18** or between the third semitransmissive mirror **21** and the second retarder **20**. This can eliminate the likelihood of, for example, deformation of the first semitransmissive mirror **11** or misalignment between the first semitransmissive mirror **11** and the first retarder **12**. This can reduce deterioration in display quality.

[0147] The optical system **16** is a single-axis (on-axis) optical system in which the optical axis of incident light is substantially aligned with the optical axis of emitted light. The optical system **16** thus uses a smaller space, allowing the display device **1**B to be smaller. The single-axis optical system **16** can reduce, for example, distortion or uneven luminance of the virtual image V viewed by the user **22**. This also facilitates the design of the optical system **16**.

[0148] In the display device **1**B, the focal length of the first semitransmissive mirror **17** may be equal to the focal length of the third semitransmissive mirror **21**, and the second semitransmissive mirror **19** may be a plane mirror. In an imaging device including the display device **1**B with this structure, the virtual image formed by light traveling along

the path P**1** substantially coincides with the virtual image formed by light traveling along the path P**2**. This can improve display quality.

[0149] In the display device **1**B, the optical path length of light emitted from the display panel **2**, transmitted through the first semitransmissive mirror **17**, reflected by the second semitransmissive mirror **19**, and reaching the first semitransmissive mirror **17** may be shorter than the focal length of the first semitransmissive mirror **17**, and the optical path length of light emitted from the display panel **2**, transmitted through the first semitransmissive mirror **17**, reflected by the second semitransmissive mirror **19**, and reaching the third semitransmissive mirror **21** may be shorter than the focal length of the first semitransmissive mirror **17**. This structure allows the user **22** to view the virtual image V. In the display device **1**B, the optical path length of light emitted from the display panel **2**, transmitted through the first semitransmissive mirror **17**, reflected by the second semitransmissive mirror **19**, and reaching the first semitransmissive mirror **17** may be longer than the focal length of the first semitransmissive mirror **17**, and the optical path length of light emitted from the display panel **2**, transmitted through the first semitransmissive mirror **17**, reflected by the second semitransmissive mirror **19**, and reaching the third semitransmissive mirror **21** may be longer than the focal length of the first semitransmissive mirror **17**. This structure allows the user **22** to view the real image.

[0150] An imaging device according to one embodiment of the present disclosure will now be described. In the present embodiment, an imaging device **100** includes the display device **1**, **1**A, **1**A', or **1**B. The imaging device **100** allows the user **22** to view the display light emitted from the display panel **2** as the virtual image V. The imaging device **100**, which includes the display device **1**, **1**A, **1**A', or **1**B, can be small and also allow the user **22** to view the virtual image V with improved display quality. When the imaging device **100** includes the display device **1**A', the imaging device **100** can be particularly thin. The imaging device **100** may allow the user **22** to view the display light emitted from the display panel **2** as the real image.

[0151] As illustrated in FIG. **10**, the imaging device **100** may be mounted on a movable body **23**. The movable body **23** may be a vehicle. Although FIG. **10** illustrates a passenger car as the vehicle, the vehicle may be any of other motor vehicles, such as a truck, a bus, or a trolley bus. The display device **1**, **1**A, **1**A', or **1**B may be at any position in the movable body **23**. The display device **1**, **1**A, **1**A', or **1**B may be located on a dashboard (instrument panel), in the dashboard, on a vehicle ceiling, or on an A-pillar. The imaging device **100** may include components that also serve as other devices or components included in the movable body **23**.

[0152] As illustrated in FIG. **10**, the imaging device **100** may include a camera **102** that captures an image of a scenery behind the movable body **23**. The camera **102** may include, for example, a charge-coupled device (CCD) image sensor or a complementary metal-oxide semiconductor (CMOS) image sensor. The imaging device **100** and the camera **102** are connected to each other through at least one of wired communication or wireless communication. When the movable body **23** is a vehicle, the imaging device **100** and the camera **102** may be connected to each other with a vehicle network such as a controller area network (CAN).

[0153] The imaging device **100** may be configured to display at least a part of the image captured by the camera **102** on the display panel **2**. With this structure, the imaging device **100** allows the user **22** (the driver of the movable body **23**) to view the scenery behind the movable body **23** as the virtual image V formed at a position farther than the imaging device **100** from the user **22**. This allows the user **22** to view the scenery behind the movable body **23** without greatly changing a gaze distance (gaze point) during driving of the movable body **23**. This can improve viewability of the virtual image V and improve driving safety. The imaging device **100**, which is small, can avoid using a large space inside the driver's cabin in the movable body **23** and avoid interfering with driving. The imaging device **100** mounted on the movable body **23** and configured to allow the user **22** to view the scenery behind the movable body **23** as the virtual image V is also referred to as a digital rearview mirror.

[0154] In the imaging device **100**, the display device **1**, **1**A, **1**A', or **1**B may include the optical element **9** (refer to FIG. **3**). In the imaging device **100**, the display panel **2** may be configured to display a composite image including a left-eye image and a right-eye image having parallax between these images and emit display light of the left-eye image and display light of the right-eye image. The optical element **9** may be configured to direct the display light of the left-eye image to the left eye of the user **22**, and direct the display light of the right-eye image to the right eye of the user **22**. This structure allows the user **22** to view, as the stereoscopic virtual image V, the display light of the left-eye image and the display light of the right-eye image emitted from the display panel **2**.

[0155] As illustrated in FIG. **11**, the imaging device **100** may include a reflective optical element **101**. In the imaging device **100**, the display device **1**, **1**A, **1**A', or **1**B may be configured to emit display light toward the reflective optical element **101**, which may then direct a part of the display light to the eyes of the user **22**. When the imaging device **100** is mounted on the movable body **23** including a windshield **24**, the imaging device **100** may use the windshield **24** also as the reflective optical element **101**.

[0156] The imaging device **100** may be used in a digital sideview mirror. With this structure, the imaging device **100** may include, as illustrated in FIG. **12**, the display device **1**, **1**A, **1**A', or **1**B (hereafter also referred to as a left display device **1**L) located on a left A-pillar of the movable body **23**, the camera **102** (hereafter also referred to as a left camera **102**L) that captures an image of the left rear of the movable body **23**, the display device **1**, **1**A, **1**A', or **1**B (hereafter also referred to as a right display device **1**R) located on a right A-pillar of the movable body **23**, and the camera **102** (hereafter also referred to as a right camera **102**R) that captures an image of the right rear of the movable body **23**. The left display device **1**L may allow the user **22** to view the image of the left rear of the movable body **23** captured by the left camera **102**L as the virtual image V (hereafter also referred to as a virtual image V**2**). The right display device **1**R may allow the user **22** to view the image of the right rear of the movable body **23** captured by the right camera **102**R as the virtual image V (hereafter also referred to as a virtual image V**3**). Note that the image may be a moving image (also referred to as a video) or a still image. The left camera **102**L may be at or near the position of a left door mirror. The right camera **102**R may be at or near the position of a right door mirror.

[0157] The imaging device **100** may be configured to cause the distance between the eyes (or an eye box) of the user **22** and the virtual image V**2** and the distance between the eyes (or the eye box) and the virtual image V**3** to be substantially equal to each other. This structure allows the user **22** to check the left rear and right rear of the movable body **23** without greatly changing the gaze distance (the distance between the eyes of the user **22** and the gaze point at which the user **22** gazes). This can improve driving safety. Note that the eye box refers to an area defined in a real space in which the eyes of the user **22** are expected to be located.

[0158] The imaging device **100** may be configured to cause the distance between the eyes (or the eye box) of the user **22** and the virtual image V**1**, the distance between the eyes (or the eye box) and the virtual image V**2**, and the distance between the eyes (or the eye box) and the virtual image V**3** to be substantially equal to one another. This structure allows the user **22** to check the immediate rear, the left rear, and the right rear of the movable body **23** without greatly changing the gaze distance. This can improve driving safety.

[0159] The imaging device **100** may be used in a cluster **29** in the dashboard in the movable body **23** (refer to FIG. **12**). With this structure, the display device **1**, **1**A, **1**A', or **1**B may allow the user **22** to view an image representing information about driving, such as the speed of the vehicle, the rotational speed of the engine, or the amount of remaining fuel, as the virtual image V (hereafter also referred to as a virtual image V**4**).

[0160] The imaging device **100** may be used in a center information display (CID) **30** (refer to FIG. **12**). With this structure, the display device **1**, **1**A, **1**A', or **1**B may be located in a center cluster of the movable body **23** to allow the user **22** to view an image representing information about, for example, navigation or the environment inside the vehicle (e.g., settings of an air conditioner or an audio device) as the virtual image V (hereafter also referred to as a virtual image V**5**).

[0161] The imaging device **100** may be configured to cause the distance between the eyes (or the eye box) of the user **22** and the virtual image V**4** and the distance between the eyes (or the eye box) and the virtual image V**5** to be substantially equal to each other. This structure allows the user **22** to check information about, for example, driving of the movable body **23**, navigation, or the environment inside the vehicle without greatly changing the gaze distance. This can improve driving safety.

[0162] The imaging device **100** may be configured to cause the distance between the eyes (or the eye box) of the user **22** and the virtual image V**1**, the distance between the eyes (or the eye box) and the virtual image V**2**, the distance between the eyes (or the eye box) and the virtual image V**3**, the distance between the eyes (or the eye box) and the virtual image V**4**, and the distance between the eyes (or the eye box) and the virtual image V**5** to be substantially equal to one another. This structure allows the user **22** to check, without greatly changing the gaze distance, the immediate rear, the left rear, and the right rear of the movable body **23** and also check information about, for example, driving of the movable body **23**, navigation, or the environment inside the vehicle. This can improve driving safety.

[0163] The imaging device **100** may be used in a passenger information display (PID) **31** (refer to FIG. **12**). With this structure, the display device **1**, **1**A, **1**A', or **1**B may be located in the dashboard near the passenger seat to cause a passenger to view, as the virtual image V, a video of entertainment content or a video representing information about, for example, the audio device or the air conditioner.

[0164] The imaging device **100** may be used in a rear-seat entertainment (RSE) system **32** (refer to FIG. **10**). With this structure, the display device **1**, **1**A, **1**A', or **1**B may be located on the back of the front seat to cause a passenger seated in the rear seat of the movable body **23** to view, as the virtual image V, a video of entertainment content or a video representing information about, for example, the audio device or the air conditioner.

[0165] The display device **1**, **1**A, **1**A', or **1**B may include a drive that adjusts the relative positions of the display panel **2**, the semitransmissive mirror **6** or the first semitransmissive mirror **11** or **17**, and the second semitransmissive mirror **13**, **13'**, or **21** in the depth direction. The image data of the image displayed on the display panel **2** may include depth information indicating the depth (the distance in the depth direction) from a reference position. The reference position may be, for example, the position of the display panel **2**. A virtual image display device **100** may be configured to adjust the distances between the display panel **2**, the semitransmissive mirror **6** or the first semitransmissive mirror **11** or **17**, and the second semitransmissive mirror **13**, **13'**, or **21** based on the depth information included in the image data, and change the position at which the virtual image V is formed in the depth direction. The drive may be, for example, an electric slider or an electric cylinder. The drive may be configured to allow the user **22** to manually adjust the relative positions of the display panel **2**, the semitransmissive mirror **6** or the first semitransmissive mirror **11** or **17**, and the second semitransmissive mirror **13**, **13'**, or **21**.

[0166] Another example of the display device according to one or more embodiments of the present disclosure will now be described.

[0167] Another example of the display device **1**, **1**A, **1**A', or **1**B will be described first. FIGS. **13** and **14** are each a top view of another example display device according to one or more embodiments of the present disclosure. Note that FIGS. **13** and **14** do not illustrate the first retarder **5**, the second retarder **7**, and the optical element **9**. Although the display device **1** is described as an example below, the display devices **1**A, **1**A', and **1**B each also have the same or a similar structure.

[0168] The display device **1** may be a part of the imaging device **100** (a digital rearview mirror). An ordinary rearview mirror, or specifically, a rearview mirror made of glass, produces an image viewed with the user's left eye (also referred to as a left-eye mirror image) and an image viewed with the user's right eye (also referred to as a right-eye mirror image) that is different from the left-eye mirror image. The user perceives, with the cognitive brain function, the left-eye mirror image and the right-eye mirror image as a mirror image viewable with the two eyes.

[0169] The display device **1** may be configured to project, in the field of view of the user **22**, a virtual image including a binocular viewable area (the virtual image V in FIGS. **13** and **14**) viewable with a left eye **22**L and a right eye **22**R of the user **22**, a left-eye viewable area VLa viewable with the left eye **22**L without the right eye **22**R, and a right-eye viewable area VRa viewable with the right eye **22**R without the left eye **22**L. In other words, when the virtual image viewable with the left eye **22**L is referred to as a left-eye

virtual image VL and the virtual image viewable with the right eye **22**R is referred to as a right-eye virtual image VR, the left-eye virtual image VL may include the left-eye viewable area VLa viewable with the left eye **22**L without the right eye **22**R, and the right-eye virtual image VR may include the right-eye viewable area VRa viewable with the right eye **22**R without the left eye **22**L. In the field of view of the user **22**, the left-eye viewable area VLa is on the right of the binocular viewable area, and the right-eye viewable area VRa is on the left of the binocular viewable area. As illustrated in FIG. **13**, the display device **1** may be configured to cause a right end **6**R of the semitransmissive mirror **6** viewable by the user **22** to be located on the line connecting the left eye **22**L and a right end VLR of the left-eye virtual image VL, and to cause a left end **6**L of the semitransmissive mirror **6** viewable by the user **22** to be located on the line connecting the right eye **22**R and a left end VRL of the right-eye virtual image VR.

[0170] With this structure, the range observed by the user **22** through the left-eye virtual image VL and the range observed by the user **22** through the right-eye virtual image VR are different from each other, in the same manner as or in a similar manner to when the left-eye mirror image and the right-eye mirror image are formed with an ordinary rearview mirror. The user **22** can thus perceive, with the cognitive brain function, the left-eye virtual image VL and the right-eye virtual image VR as the virtual image V viewable with the two eyes **22**L and **22**R, in the same manner as or in a similar manner to when the user **22** uses an ordinary rearview mirror. This can reduce discomfort for the user **22**.

[0171] In the display device **1**, the reflective surface of the reflective polarizer **8** adjacent to the display surface **2***a* may have a size larger than or equal to the size of the display surface **2***a*. With this structure, the reflective polarizer **8** can reflect the entire image of the display surface **2***a* toward the semitransmissive mirror **6**. The display device **1** may be configured to cause a virtual image VD (hereafter also referred to as a display surface virtual image) of the entire display surface **2***a* projected in the field of view of the user **22** to include the left-eye virtual image VL and the right-eye virtual image VR. This structure can form an area R appearing in the field of view of the left eye **22**L or the right eye **22**R when the user **22** moves the head, or in other words, an additional view area R viewable with the left eye **22**L or the right eye **22**R. This allows the user **22** to view the left-eye virtual image VL and the right-eye virtual image VR that change with head movement in the same manner as or in a similar manner to when the user **22** uses an ordinary rearview mirror. This can reduce discomfort for the user **22**. The size (dimension) of the additional view area R may be controlled by controlling, for example, the size of the display surface **2***a* or the magnification factor of the virtual image.

[0172] The size of the additional view area R may also be controlled by controlling an image display area (an area in which an image is actually displayed) A on the display surface **2***a*. The image display area A that is set larger causes the additional view area R to be larger. The image display area A that is set smaller causes the additional view area R to be smaller. When the image display area A is smaller than a predetermined threshold area, the additional view area R disappears, causing the left-eye virtual image VL and the right-eye virtual image VR to be the same virtual image.

[0173] As described above, the display device **1** may include a housing **27**. The housing **27** may include an opening **28** in its front side (nearer the user **22**). The virtual image V may be larger than the opening **28** in the field of view of the user **22**. The size of the additional view area R may also be controlled based on the size of the opening **28**. The size of the opening **28** may be designed as appropriate to form the left-eye virtual image VL including an area unviewable with the right eye **22**R and the right-eye virtual image VR including an area unviewable with the left eye **22**L, as illustrated in FIG. **14**. The size of the opening **28** may be designed as appropriate to form the additional view area R and control the size of the additional view area R. When the size of the additional view area R is controlled based on the opening **28**, the semitransmissive mirror **6** may have any size that allows the entire image of the display surface **2***a* to be projected in the field of view of the user **22**. This facilitates the design of the optical system **3**.

[0174] The display devices **1**A, **1**A', and **1**B each also have the same or a similar structure. The display device **1**A, **1**A', or **1**B may be configured to project, in the field of view of the user **22**, a virtual image including the binocular viewable area viewable with the left eye **22**L and the right eye **22**R, the left-eye viewable area viewable with the left eye **22**L without the right eye **22**R, and the right-eye viewable area viewable with the right eye **22**R without the left eye **22**L. This structure can reduce discomfort for the user **22**. The display device **1**A or **1**A' may be configured to cause the right end of the first semitransmissive mirror **11** viewable by the user **22** to be located on the line connecting the left eye **22**L and the right end of the left-eye virtual image, and to cause the left end of the first semitransmissive mirror **11** viewable by the user **22** to be located on the line connecting the right eye **22**R and the left end of the right-eye virtual image. The display device **1**B may be configured to cause the right end of each of the first semitransmissive mirror **17** and the third semitransmissive mirror **21** viewable by the user **22** to be located on the line connecting the left eye **22**L and the right end of the left-eye virtual image, and to cause the left end of each of the first semitransmissive mirror **17** and the third semitransmissive mirror **21** viewable by the user **22** to be located on the line connecting the right eye **22**R and the left end of the right-eye virtual image. The display device **1**A, **1**A', or **1**B may be configured to form the additional view area R. The display device **1**A, **1**A', or **1**B may be configured to control the size of the additional view area R based on the image display area A or based on the opening **28** in the housing **27**.

[0175] Another example of the display device **1**, **1**A, or **1**A' will now be described. FIGS. **15** and **16** are each a cross-sectional view describing another example display device. FIGS. **17**A to **17**D and **18**A to **18**D are each a diagram describing an optical system in another example display device. FIG. **19** is a graph describing an optical system in another example display device. Although the display device **1** is described as an example below, the display devices **1**A and **1**A' each also have the same or a similar structure.

[0176] The display device **1** is configured to cause the second linearly polarized light L**2** to be reflected by the reflective polarizer **8** without being emitted from the display device **1** when the user **22** is in front of the display device **1** (refer to FIGS. **2** and **3**). In other words, the display device **1** is configured to have the transmission axis of a polarizer

frontward (nearer the user **22**) from the display panel **2** (liquid crystal panel) and the transmission axis of the reflective polarizer **8** being perpendicular to each other (in a crossed Nicols arrangement) when the display device **1** is viewed from the front. Thus, as illustrated in FIGS. **2** and **3**, the second linearly polarized light L**2** is not emitted from the display device **1**, and the fourth linearly polarized light L**4** is emitted from the display device **1**. In other words, the user **22** views an image reflected by the semitransmissive mirror **6** as the virtual image V without directly viewing the display panel **2**.

[0177] When the user **22** is not in front of the display device **1**, the transmission axis of the polarizer frontward from the display panel **2** and the transmission axis of the reflective polarizer **8** may not form the crossed Nicols arrangement. This may cause a part of the second linearly polarized light L**2** to be transmitted through the reflective polarizer **8**. This may thus allow the user **22** to directly view the real image of the display panel **2** and also view the virtual image V reflected by the semitransmissive mirror **6**, possibly lowering the display quality of the display device **1**.

[0178] In this example, as illustrated in FIGS. **15** and **16**, the display device **1** includes a third retarder **25** between the display panel **2** and the reflective polarizer **8**. This allows the relative angle between the transmission axis of the polarizer frontward from the display panel **2** and the transmission axis of the reflective polarizer **8** to be close to the crossed Nicols arrangement when the user **22** is not in front of the display device **1**. This can reduce deterioration in the display quality of the display device **1**. The third retarder **25** may be, for example, a half-wave plate, a quarter-wave plate, an eighth-wave plate, a sixteenth-wave plate, or another waveplate that introduces any other phase difference. The third retarder **25** may have the optical axis substantially parallel to or substantially perpendicular to the transmission axis of the reflective polarizer **8**.

[0179] In this example, as illustrated in FIGS. **15** and **16**, the display device **1** may further include a fourth retarder **26** between the display panel **2** and the reflective polarizer **8**. This structure allows the relative angle between the transmission axis of the polarizer frontward from the display panel **2** and the transmission axis of the reflective polarizer **8** to be closer to the crossed Nicols arrangement when the user **22** is not in front of the display device **1**. This can further reduce deterioration in the display quality of the display device **1**. The fourth retarder **26** may be, for example, a half-wave plate, a quarter-wave plate, an eighth-wave plate, a sixteenth-wave plate, or another waveplate that introduces any other phase difference. The fourth retarder **26** may have the optical axis substantially parallel to or substantially perpendicular to the transmission axis of the reflective polarizer **8**.

[0180] The third retarder **25** and the fourth retarder **26** may be at any positions between the display panel **2** and the reflective polarizer **8**. Without any other optical element between the third retarder **25** and the fourth retarder **26**, the third retarder **25** and the fourth retarder **26** may be in contact with each other. This structure can reduce the thickness of the optical system **3** in the depth direction.

[0181] One of the third retarder **25** or the fourth retarder **26** may be a quarter-wave plate, and the other may be a half-wave plate. This structure can effectively reduce deterioration in the display quality of the display device **1**. Both the third retarder **25** and the fourth retarder **26** may be half-wave plates. This structure can more effectively reduce deterioration in the display quality of the display device **1**.

[0182] FIGS. **17**A, **17**B, **17**C, and **17**D each illustrate a Poincaré sphere describing the optical functions (the effects on the polarization states of light) of the third retarder **25** and the fourth retarder **26** when the third retarder **25** and the fourth retarder **26** are half-wave plates. FIGS. **17**A and **17**B are each a diagram describing the optical function of the third retarder **25**. FIGS. **17**C and **17**D are each a diagram describing the optical function of the fourth retarder **26**. FIGS. **17**A and **17**C each illustrate the Poincaré sphere viewed from the north pole (in an S3-direction). FIGS. **17**B and **17**D each illustrate the Poincaré sphere viewed laterally (in an S1-direction). In FIGS. **17**A, **17**B, **17**C, and **17**D, S_{LCD} indicates the polarization state of light immediately after emitted from the display panel **2**. S_{25} indicates the polarization state of light that has passed through the third retarder **25**. S_{26} indicates the polarization state of light that has passed through the fourth retarder **26**. In other words, S_{26} indicates the polarization state of light immediately before incident on the reflective polarizer **8**. S_{RP} indicates the polarization state of light transmitted through the reflective polarizer **8** at a transmittance of substantially 100%. S_{AP} indicates the antipode of S_{RP} (the point symmetric to S_{RP} with respect to the center of the Poincare sphere). When S_{26} is at or near S_{AP}, the light emitted from the display panel **2** and passing through the third retarder **25** and the fourth retarder **26** is less likely to be transmitted through the reflective polarizer **8**. This can reduce the likelihood that the user **22** directly views the real image of the display panel **2**, thus reducing deterioration in the display quality of the display device **1**.

[0183] As illustrated in FIGS. **17**C and **17**D, when the third retarder **25** and the fourth

[0184] retarder **26** are half-wave plates, S_{26} is located substantially at S_{AP}. This can reduce the likelihood that the user **22** directly views the real image of the display panel **2**, thus reducing deterioration in the display quality of the display device **1**.

[0185] FIGS. **18**A, **18**B, **18**C, and **18**D each illustrate a Poincaré sphere describing the optical functions of the third retarder **25** and the fourth retarder **26** when the third retarder **25** is a quarter-wave plate and the fourth retarder **26** is a half-wave plate. FIGS. **18**A and **18**B are each a diagram describing the optical function of the third retarder **25**. FIGS. **18**C and **18**D are each a diagram describing the optical function of the fourth retarder **26**. FIGS. **18**A and **18**C each illustrate the Poincaré sphere viewed from the north pole (in the S3-direction). FIGS. **18**B and **18**D each illustrate the Poincaré sphere viewed laterally (in the S1-direction). S_{LCD}, S_{25}, S_{26}, S_{RP}, and S_{AP} are as described above.

[0186] As illustrated in FIGS. **18**C and **18**D, when the third retarder **25** is a quarter-wave plate and the fourth retarder **26** is a half-wave plate, S_{26} is near S_{AP}. This can reduce the likelihood that the user **22** directly views the real image of the display panel **2**, thus reducing deterioration in the display quality of the display device **1**.

[0187] FIG. **19** is a graph showing the relationship between the light transmittance of an optical system including the third retarder **25** and the fourth retarder **26** located between polarizers PP**1** and PP**2** having the transmission axes perpendicular to each other, and the phase differences of the third retarder **25** and the fourth retarder **26**. FIG. **19** shows the results obtained through simulations. Green light

with a wavelength λ of 550 nm is used as incident light. The polarizer PP**1**, the third retarder **25**, the fourth retarder **26**, and the polarizer PP**2** are arranged in this order in the traveling direction of the incident light. The polarizer PP**1** simulates the polarizer frontward from the display panel **2**. The polarizer PP**2** simulates the reflective polarizer **8**.

[0188] In the graph in FIG. **19**, the solid line indicates the transmittance with the phase difference of the third retarder **25** being varied while the phase difference of the fourth retarder **26** being fixed to 0 nm. The transmittance is the lowest when the phase difference of the third retarder **25** is about 275 nm (half the wavelength λ of the incident light). In the graph in FIG. **19**, the dashed line indicates the transmittance with the phase difference of the fourth retarder **26** being varied while the phase difference of the third retarder **25** being fixed to 270 nm. The transmittance is the lowest when the phase difference of the fourth retarder **26** is about 275 nm (half the wavelength λ of the incident light).

[0189] The simulation results in the graph in FIG. **19** show that, when the third retarder **25** and the fourth retarder **26** are half-wave plates, the display device **1** can effectively reduce the likelihood that the user **22** directly views the real image of the display panel **2** and thus effectively reduce deterioration in the display quality of the display device **1**. The results also show that, when the phase difference of the fourth retarder **26** is fixed to 0 nm (in other words, when the display device **1** includes the third retarder **25** without including the fourth retarder **26**), the third retarder **25** that introduces a phase difference greater than 0 nm (in other words, nonzero) to the light incident on the third retarder **25** allows the display device **1** to effectively reduce the likelihood that the user **22** directly views the real image of the display panel **2** and thus effectively reduce deterioration in the display quality of the display device **1**. The display devices **1**A and **1**A' each also have the same or a similar structure. The

[0190] display device **1**A or **1**A' may include the third retarder **25** between the display panel **2** and the polarizer **15**. This structure can reduce the likelihood that the user **22** directly views the real image of the display panel **2**, thus reducing deterioration in the display quality of the display device **1**A or **1**A'. The display device **1**A or **1**A' may further include the fourth retarder **26** between the display panel **2** and the polarizer **15**. This structure can further reduce the likelihood that the user **22** directly views the real image of the display panel **2**, thus further reducing deterioration in the display quality of the display device **1**A or **1**A'. Each of the third retarder **25** and the fourth retarder **26** may be, for example, a half-wave plate, a quarter-wave plate, an eighth-wave plate, a sixteenth-wave plate, or another waveplate that introduces any other phase difference. One of the third retarder **25** or the fourth retarder **26** may be a quarter-wave plate, and the other may be a half-wave plate. This structure can effectively reduce deterioration in the display quality of the display device **1**. Both the third retarder **25** and the fourth retarder **26** may be half-wave plates. This structure can more effectively reduce deterioration in the display quality of the display device **1**. The third retarder **25** and the fourth retarder **26** may be at any positions between the display panel **2** and the polarizer **15**.

[0191] Another example of the display device **1**, **1**A, **1**A', or **1**B will now be described. FIG. **20** is a cross-sectional view of another example of the display device **1**A'. FIG. **21** is a cross-sectional view of another example of the display device **1**A.

[0192] The second semitransmissive mirror **13'** in the display device **1**A' may include a holographic optical element (HOE). This structure achieves the optical function of the second semitransmissive mirror **13'** using an optical element being a flat plate as illustrated in FIG. **20**, thus reducing the thickness of the second semitransmissive mirror **13'** in the depth direction (Z-direction). This can reduce the size of the display device **1**A' in the depth direction. Further, the second semitransmissive mirror **13'** being an optical element that is a flat plate can be placed close to or in contact with the second retarder **14**, thus further reducing the size of the display device **1**A' in the depth direction.

[0193] The first semitransmissive mirror **11** in the display device **1**A' may include an HOE. This structure achieves the optical function of the first semitransmissive mirror **11** using an optical element being a flat plate as illustrated in FIG. **20**, thus reducing the thickness of the first semitransmissive mirror **11** in the depth direction. This can reduce the size of the display device **1**A' in the depth direction. Further, the first semitransmissive mirror **11** being an optical element that is a flat plate can be placed close to or in contact with the display panel **2**, thus further reducing the size of the display device **1**A' in the depth direction.

[0194] When the first semitransmissive mirror **11** is not polarization-selective, the amount

[0195] of light emitted from the display device **1**A' may be smaller, possibly lowering the luminance of the virtual image V viewed by the user **22**. Thus, the first semitransmissive mirror **11** including the HOE may be polarization-selective. For example, the first semitransmissive mirror **11** including the HOE may include, on the surface facing the display panel **2** or on the surface facing the first retarder **12**, multiple thin metal wires (a metal nanowire grid) that are polarization-selective to transmit s-polarized light and reflect p-polarized light. This structure can avoid lowering the luminance of the virtual image V viewed by the user **22**.

[0196] The first semitransmissive mirror **11** in the display device **1**A may include an HOE. This structure achieves the optical function of the first semitransmissive mirror **11** using an optical element being a flat plate as illustrated in FIG. **21**, thus reducing the thickness of the first semitransmissive mirror **11** in the depth direction. This can reduce the size of the display device **1**A in the depth direction. Further, the first semitransmissive mirror **11** being an optical element that is a flat plate can be placed close to or in contact with the display panel **2**, thus further reducing the size of the display device **1**A in the depth direction. The first semitransmissive mirror **11** including the HOE may be polarization-selective. For example, the first semitransmissive mirror **11** including the HOE may include, on the surface facing the display panel **2** or on the surface facing the first retarder **12**, multiple thin metal wires that are polarization-selective to transmit s-polarized light and reflect p-polarized light. This structure can avoid lowering the luminance of the virtual image V viewed by the user **22**.

[0197] The semitransmissive mirror **6** in the display device **1** may include an HOE. This structure achieves the optical function of the semitransmissive mirror **6** using an optical element being a flat plate, thus reducing the thickness of the semitransmissive mirror **6** in the depth direction. This can reduce the size of the display device **1** in the depth

direction. Further, the semitransmissive mirror **6** being an optical element that is a flat plate can be placed close to or in contact with the first retarder **5**, thus further reducing the size of the display device **1** in the depth direction.

[0198] The first semitransmissive mirror **17** in the display device **1**B may include an HOE. This structure achieves the optical function of the first semitransmissive mirror **17** using an optical element being a flat plate, thus reducing the thickness of the first semitransmissive mirror **17** in the depth direction. This can reduce the size of the display device **1**B in the depth direction. Further, the first semitransmissive mirror **17** being an optical element that is a flat plate can be placed close to or in contact with the display panel **2**, thus further reducing the size of the display device **1**B in the depth direction. The first semitransmissive mirror **17** including the HOE may be polarization-selective. For example, the first semitransmissive mirror **17** including the HOE may include, on the surface facing the display panel **2** or on the surface facing the first retarder **18**, multiple thin metal wires that are polarization-selective to transmit s-polarized light and reflect p-polarized light. This structure can avoid lowering the luminance of the virtual image V viewed by the user **22**.

[0199] The third semitransmissive mirror **21** in the display device **1**B may include an HOE. This structure achieves the optical function of the third semitransmissive mirror **21** using an optical element being a flat plate, thus reducing the thickness of the third semitransmissive mirror **21** in the depth direction. This can reduce the size of the display device **1**B in the depth direction. The third semitransmissive mirror **21** including the HOE may be polarization-selective. For example, the third semitransmissive mirror **21** including the HOE may include, on the surface facing the second retarder **20** or on the surface opposite to the surface facing the second retarder **20**, multiple thin metal wires that are polarization-selective to reflect s-polarized light and transmit p-polarized light. This structure can reduce deterioration in the quality of the virtual image V viewed by the user **22**, and can also avoid lowering the luminance of the virtual image V.

[0200] The HOE may have, for example, an interference pattern and may be configured to diffract incident light in a predetermined direction.

[0201] The second semitransmissive mirror **13'** in the display device **1**A' may include a Fresnel lens. This structure achieves the optical function of the second semitransmissive mirror **13'** using an optical element that is a substantially flat plate with a smaller thickness (the dimension in the depth direction) than a convex semitransparent mirror as illustrated in FIG. **22**, thus reducing the thickness of the second semitransmissive mirror **13'** in the depth direction. This can reduce the size of the display device **1**A' in the depth direction. Further, the second semitransmissive mirror **13'** being an optical element that is a substantially flat plate can be placed close to or in contact with the second retarder **14**, thus further reducing the size of the display device **1**A' in the depth direction. The second semitransmissive mirror **13'** including the Fresnel lens is also referred to as a Fresnel semitransparent mirror **13'**.

[0202] As illustrated in FIG. **23**, the Fresnel semitransparent mirror **13'** may include a Fresnel lens (Fresnel convex lens) **33** and a semitransmissive reflective layer **34**. The Fresnel lens **33** may include a first surface **33***a* being flat and facing the second retarder **14** and a second surface **33***b* having a Fresnel configuration and facing the first retarder **12**. The semitransmissive reflective layer **34** may be located on the second surface **33***b*. The Fresnel configuration includes concentric circular grooves centered at a reference point **33***c*. Each of the grooves includes a surface substantially perpendicular to the first surface **33***a* and an inclined surface inclined with respect to the first surface **33***a*. The inclined surface may be a curved surface or a flat surface. The semitransmissive reflective layer **34** may be located on the inclined surface of the Fresnel configuration. The semitransmissive reflective layer **34** may transmit a part (e.g., substantially 50%) of incident light and reflect the remaining part (e.g., substantially 50%). The semitransmissive reflective layer **34** may be a metal thin film. The metal thin film may be made of a metal material such as aluminum or chromium. The metal thin film may be formed with, for example, a vacuum deposition method such as chemical vapor deposition (CVD) or physical vapor deposition (PVD).

[0203] The Fresnel semitransparent mirror **13'** has the optical function of a lens and the optical function of a semitransparent mirror. The optical function of a lens (e.g., the focal length) is determined by, for example, the curvature or the inclination angle of the inclined surface or by the refractivity of the material for the Fresnel lens **33**. The optical function of a semitransparent mirror (e.g., the focal length or the transmittance) is determined by, for example, the curvature or the inclination angle of the inclined surface or by the transmittance of the semitransmissive reflective layer **34**.

[0204] The surface of the Fresnel semitransparent mirror **13'** facing the second retarder **14** may be flat with a transparent material layer smoothing the second surface **33***b* of the Fresnel lens **33**. The transparent material layer may be made of a material having substantially the same refractivity as the material for the Fresnel lens **33**. The transparent material layer may be made of a material that is the same as the material for the Fresnel lens **33**.

[0205] The first semitransmissive mirror **11** in the display device **1**A' may include a Fresnel lens. This structure can reduce the thickness of the first semitransmissive mirror **11** as illustrated in FIG. **22**, and can thus reduce the size of the display device **1**A' in the depth direction. Further, the first semitransmissive mirror **11** including the Fresnel lens and being a substantially flat plate can be placed close to or in contact with the display panel **2**, thus further reducing the size of the display device **1**A' in the depth direction. The first semitransmissive mirror **11** including the Fresnel lens is also referred to as a Fresnel semitransparent mirror **11**. The Fresnel semitransparent mirror **11** may have the same structure as or a similar structure to the Fresnel semitransparent mirror **13'**. The Fresnel semitransparent mirror **11** may include a Fresnel concave lens.

[0206] When the first semitransmissive mirror **11** is replaced with the Fresnel semitransparent mirror **11** that is not polarization-selective, the amount of light emitted from the display device **1**A' may be smaller, possibly lowering the luminance of the virtual image V viewed by the user **22**. Thus, the Fresnel semitransparent mirror **11** may be polarization-selective. For example, the Fresnel semitransparent mirror **11** may include, on the surface facing the display panel **2** or on the surface facing the first retarder **12**, multiple thin metal wires (a metal nanowire grid) that are polarization-selective to transmit s-polarized light and reflect p-po-

larized light. This can avoid lowering the luminance of the virtual image V viewed by the user **22**.

[0207] The first semitransmissive mirror **11** in the display device **1**A may include a Fresnel lens, as illustrated in FIG. **23**. This structure can reduce the thickness of the first semitransmissive mirror **11**, and can thus reduce the size of the display device **1**A in the depth direction. Further, the first semitransmissive mirror **11** including the Fresnel lens and being a substantially flat plate can be placed close to or in contact with the display panel **2**, thus further reducing the size of the display device **1**A in the depth direction. The first semitransmissive mirror **11** including the Fresnel lens may be polarization-selective. For example, the first semitransmissive mirror **11** including the Fresnel lens may include, on the surface facing the display panel **2** or on the surface facing the first retarder **12**, multiple thin metal wires that are polarization-selective to transmit s-polarized light and reflect p-polarized light. This structure can avoid lowering the luminance of the virtual image V viewed by the user **22**.

[0208] The semitransmissive mirror **6** in the display device **1** may include a Fresnel lens. This structure can reduce the thickness of the semitransmissive mirror **6**, and can thus reduce the size of the display device **1** in the depth direction. Further, the semitransmissive mirror **6** including the Fresnel lens and being a substantially flat plate can be placed close to or in contact with the first retarder **5**, thus further reducing the size of the display device **1** in the depth direction.

[0209] The first semitransmissive mirror **17** in the display device **1**B may include a Fresnel lens. This structure can reduce the thickness of the first semitransmissive mirror **17**, and can thus reduce the size of the display device **1**B in the depth direction. Further, the first semitransmissive mirror **17** including the Fresnel lens and being a substantially flat plate can be placed close to or in contact with the display panel **2**, thus further reducing the size of the display device **1**B in the depth direction. The first semitransmissive mirror **17** including the Fresnel lens may be polarization-selective. For example, the first semitransmissive mirror **17** including the Fresnel lens may include, on the surface facing the display panel **2** or on the surface facing the first retarder **18**, multiple thin metal wires that are polarization-selective to transmit s-polarized light and reflect p-polarized light. This structure can avoid lowering the luminance of the virtual image V viewed by the user **22**.

[0210] The third semitransmissive mirror **21** in the display device **1**B may include a Fresnel lens. This structure can reduce the thickness of the third semitransmissive mirror **21**, and can thus reduce the size of the display device **1**B in the depth direction. The third semitransmissive mirror **21** including the Fresnel lens may be polarization-selective. For example, the third semitransmissive mirror **21** including the Fresnel lens may include, on the surface facing the second retarder **20** or on the surface opposite to the surface facing the second retarder **20**, multiple thin metal wires that are polarization-selective to reflect s-polarized light and transmit p-polarized light. This structure can reduce deterioration in the quality of the virtual image V viewed by the user **22**, and can also avoid lowering the luminance of the virtual image V.

[0211] The control of the additional view area in the imaging device **100** (the display device **1**, **1**A, **1**A', or **1**B) will now be described. In the example described below, the imaging device **100** is a digital rearview mirror (refer to FIG. **10**). The imaging device **100** includes an angle sensor that detects the orientation of the display device **1**, **1**A, **1**A', or **1**B with respect to a predetermined direction fixed for the movable body **23**. For example, the predetermined direction may be, but not limited to, the vehicle length direction of the movable body **23**. The angle sensor may be a three-axis angle sensor that can detect the orientation (roll, pitch, and yaw) of the display device **1**, **1**A, **1**A', or **1**B. The movable body **23** includes a driver monitoring system (DMS) that can communicate with and be controlled by the imaging device **100**. The DMS can capture an image of the face of the user **22** seated in the driver's seat of the movable body **23**, perform face recognition of the user **22**, and determine whether the user **22** is a known user. A known user may refer to a user having information (also referred to as user information) stored in at least one of the storage in the controller **43** or a storage in the DMS. The user information includes, for example, features used for face recognition and the eye positions or the face orientation during driving.

[0212] When the user **22** is in front of the display device **1**, **1**A, **1**A', or **1**B, a left additional view area PL and a right additional view area PR have substantially the same size (refer to FIG. **25**). Thus, the user **22** can view the virtual image V that changes with head movement, in the same manner as or in a similar manner to when the user **22** uses an ordinary rearview mirror. When the user **22** is not in front of the display device **1**, **1**A, **1**A', or **1**B, the left additional view area PL and the right additional view area PR have different sizes (refer to FIG. **26**). The user **22** thus cannot view the virtual image V that changes with head movement, unlike when using an ordinary rearview mirror, and can feel discomfort.

[0213] The control of the imaging device **100** performed by the controller **43** will now be described with reference to the flowchart in FIG. **29**. In the flowchart, "step" is abbreviated as "S", "positive" (a computer flag of 1) in determination control is indicated by Yes, and "negative" (a computer flag of 0) in determination control is indicated by No.

[0214] The processing in the flowchart in FIG. **29** starts in response to, for example, the user **22** being seated in the driver's seat of the movable body **23** and starting the engine of the movable body **23**.

[0215] In S**1**, the DMS is controlled to check the user **22** seated in the driver's seat of the movable body **23** (check user).

[0216] In S**2**, the DMS is controlled to perform face recognition of the user **22** seated in the

[0217] driver's seat and determine whether the user **22** is a known user. When the user **22** is a known user (Yes) in S**2**, the processing advances to S**3**. When the user **22** is not a known user (No) in S**2**, the processing advances to S**7**.

[0218] In step S**3**, user information of the user **22** (information of, for example, the eye positions or the face orientation during driving) is obtained from the DMS.

[0219] In S**4**, the display device **1**, **1**A, **1**A', or **1**B is adjusted based on the user information obtained in S**3**. Adjusting the display device **1**, **1**A, **1**A', or **1**B may include shifting a display area for displaying an image on the display surface **2***a* of the display panel **2** based on, for example, the orientation of the display device **1**, **1**A, **1**A', or **1**B or the eye positions or the face orientation of the user **22**. Shifting the display area may include switching a part of the display surface **2***a* to a non-display area **2***b* on which no image is displayed, as illustrated in FIG. **27**. Shifting the display area

for displaying an image on the display surface **2***a* as illustrated in FIG. **27** allows the left additional view area PL and the right additional view area PR to have substantially the same size when the user **22** is not in front of the display device **1**, **1**A, **1**A', or **1**B. This can reduce the likelihood that the user **22** feels discomfort.

[0220] Adjusting the display device **1**, **1**A, **1**A', or **1**B may include sliding (translating) at least one of the reflective polarizer **8**, the semitransmissive mirror **6**, or the display panel **2** in a direction perpendicular to the emission direction of the display light from the display panel **2** based on, for example, the orientation of the display device **1**, **1**A, **1**A', or **1**B or the eye positions or the face orientation of the user **22**. Sliding at least one of the reflective polarizer **8**, the semitransmissive mirror **6**, or the display panel **2** allows the left additional view area PL and the right additional view area PR to have substantially the same size as illustrated in FIG. **28**. This can reduce the likelihood that the user **22** feels discomfort. Sliding at least one of the reflective polarizer **8**, the semitransmissive mirror **6**, or the display panel **2** can reduce the likelihood that the left additional view area PL and the right additional view area PR are smaller than when the user **22** is in front of the display device **1**, **1**A, **1**A', or **1**B.

[0221] In S**5**, the controller **43** receives an instruction from the user **22** indicating whether to readjust the display device **1**, **1**A, **1**A', or **1**B. The imaging device **100** may be configured to receive an instruction to perform readjustment in response to, for example, the user **22** operating a button on a steering wheel. The imaging device **100** may be configured to receive an instruction to perform readjustment in response to the user **22** turning the imaging device **100** and changing the orientation of the imaging device **100**. A change in the orientation of the imaging device **100** may be detected by the three-axis angle sensor included in the imaging device **100**. Note that the controller **43** may determine that no readjustment is to be performed in response to no instruction within a predetermined time after starting receiving an instruction from the user **22**. For example, the predetermined time may be, but not limited to, about 3 to 10 seconds.

[0222] When the display device **1**, **1**A, **1**A', or **1**B is determined to be readjusted (Yes) in S**5**, the processing advances to S**6**. When the display device **1**, **1**A, **1**A', or **1**B is determined not to be readjusted (No) in S**5**, the processing in the flowchart ends. Note that the processing may advance to S**7** when the display device **1**, **1**A, **1**A', or **1**B is determined to be readjusted (Yes) in S**5**.

[0223] In S**6**, the controller **43** controls the DMS to detect the user information of the user **22** (information of, for example, the eye positions or the face orientation during driving), and obtains the user information of the user **22** from the DMS.

[0224] In S**7**, the display device **1**, **1**A, **1**A', or **1**B is adjusted based on the user information obtained in S**6**. The display device **1**, **1**A, **1**A', or **1**B may be adjusted as in S**4**.

[0225] In S**8**, an instruction indicating whether to readjust the display device **1**, **1**A, **1**A', or **1**B is received from the user **22**. An instruction from the user **22** may be received as in S**5**. When the display device **1**, **1**A, **1**A', or **1**B is determined to be readjusted (Yes) in S**8**, the processing returns to S**6**. When the display device **1**, **1**A, **1**A', or **1**B is determined not to be readjusted (No) in S**8**, the processing advances to S**9**. Note that the processing may return to S**7** when the display device **1**, **1**A, **1**A', or **1**B is determined to be readjusted (Yes) in S**8**.

[0226] In S**9**, the controller **43** stores the user information of the user **22** and information about adjustment of the display device **1**, **1**A, **1**A', or **1**B into at least one of the storage in the controller **43** or the storage in the DMS, and ends the processing in the flowchart.

[0227] The processing in the flowchart in FIG. **29** allows efficient control of the additional view area in the digital rearview mirror, thus reducing the likelihood that the user **22** feels discomfort. Note that the processing in the flowchart in FIG. **29** may also be used when the imaging device **100** is used in a digital sideview mirror.

[0228] Another example of the display device **1**, **1**A, **1**A', or **1**B will now be described. The components that are the same as or similar to the components of the display device **1**, **1**A, **1**A', or **1**B are denoted by the same reference numerals and will not be described in detail. In this example, as illustrated in FIG. **33**, a display device **1**C includes the display panel **2**, an optical system **35**, and the housing **36**.

[0229] The display panel **2** includes the display surface **2***a* to display an image. The optical system **35** projects display light emitted from the display panel **2** in the field of view of the user **22** as the virtual image V. The optical system **35** may be the optical system **3** (refer to FIGS. **2**, **3**, and **30**), the optical system **10** (refer to FIGS. **4**, **5**, and **31**), or the optical system **16** (refer to FIGS. **9** and **32**). In the examples in FIGS. **33** to **36**, the optical system **35** is the optical system **3** illustrated in FIG. **30**.

[0230] The housing **36** accommodates the display panel **2** and the optical system **35**. The housing **36** may hold the display panel **2** and the optical system **35**. When the display device **1**C includes the illuminator **4**, the housing **36** may accommodate and hold the illuminator **4**. The housing **36** includes the window (opening) **37** that transmits light emitted from the optical system **35**. In the display device **1**C, the window **37** may overlap the display panel **2** when viewed through the window **37** in the housing **36**. In the display device **1**C, the window **37** may overlap the optical system **35** when viewed through the window **37** in the housing **36**. In the display device **1**C, the display panel **2** may overlap the optical system **35** when viewed through the window **37** in the housing **36**. With this structure, the display device **1**C uses a smaller space and can be smaller. In the display device **1**C, the display light emitted from the display panel **2** travels substantially along a single axis to form the virtual image V. This can reduce, for example, distortion or uneven luminance of the virtual image V viewed by the user **22**, and also facilitates the design of the optical system **35**.

[0231] As illustrated in FIGS. **33** and **34**, the housing **36** may include the light-transmissive plate **38** in the window **37**. The light-transmissive plate **38** may transmit light emitted from the optical system **35**. The light-transmissive plate **38** at least partly covers the window **37**. The light-transmissive plate **38** may be made of, for example, glass or a resin.

[0232] The optical system **35** (optical system **3**) may include the third retarder **25** and the fourth retarder **26**. The third retarder **25** may be located on the surface of the second retarder **7** facing the semitransmissive mirror **6**. The fourth retarder **26** may be located on the surface of the third retarder **25** facing the semitransmissive mirror **6**. This allows the relative angle between the transmission axis of the polarizer frontward from the display panel **2** and the transmission axis of the reflective polarizer **8** to be close to the crossed Nicols arrangement when the user **22** is not in front of the display device **1**C. This can reduce deterioration in the

display quality of the display device **1**C. The third retarder **25** and the fourth retarder **26** may be, but not limited to, half-wave plates. Each of the third retarder **25** and the fourth retarder **26** may be, for example, a quarter-wave plate, an eighth-wave plate, a sixteenth-wave plate, or another waveplate that introduces any other phase difference. The third retarder **25** and the fourth retarder **26** may be waveplates that introduce the same phase difference or different phase differences. The third retarder **25** may have the optical axis substantially parallel to or substantially perpendicular to the transmission axis of the reflective polarizer **8**.

[0233] The optical system **35** (optical system **3**) may include a moth-eye film **39** on the surface of the first retarder **5** facing the semitransmissive mirror **6**. The moth-eye film **39** can reduce reflection of incident light transmitted through the semitransmissive mirror **6**. This can reduce the likelihood that, for example, unintended light or ambient light is reflected by the first retarder **5**, emitted from the display device **1**C, and incident on the eyes of the user **22**.

[0234] The optical system **35** (optical system **3**) may include a moth-eye film **40** on the surface of the fourth retarder **26** facing the semitransmissive mirror **6**. This can reduce the likelihood that, for example, unintended light or ambient light is reflected by the fourth retarder **26**, emitted from the display device **1**C, and incident on the eyes of the user **22**.

[0235] The reflective polarizer **8**, the second retarder **7**, the third retarder **25**, the fourth retarder **26**, and the moth-eye film **40** may be integral with the light-transmissive plate **38**. This allows the display device **1**C to be thinner in the depth direction (Z-direction). The structure can also reduce deformation of the reflective polarizer **8**, the second retarder **7**, the third retarder **25**, the fourth retarder **26**, the moth-eye film **40**, and the light-transmissive plate **38**.

[0236] The display device **1**C may include the touchscreen **41**. The touchscreen **41** may at least partly cover the window **37**. As illustrated in FIGS. **35** and **36**, the touchscreen **41** may be attached to the housing **36**. As illustrated in FIGS. **35** and **36**, the touchscreen **41** may be attached to the housing **36** and may cover the window **37** in which the light-transmissive plate **38** is located. The touchscreen **41** may cover the light-transmissive plate **38**. The touchscreen **41** is connected to the controller **43** with a wired or wireless communication line to communicate with the controller **43**. This allows the user **22** to operate the display device **1**C through the touchscreen **41**. The touchscreen **41** may be any known touchscreen.

[0237] A display system **200** according to one or more embodiments of the present disclosure will now be described. As illustrated in FIG. **39**, the display system **200** includes the display device **1**, **1**A, **1**A', **1**B, or **1**C and a camera **201**. The display panel **2** in the display device **1**, **1**A, **1**A', **1**B, or **1**C can communicate with the camera **201** to display an image captured by the camera **201**. The display panel **2** and the camera **201** may be connected to each other, for example, with a wire, wirelessly, or with a CAN.

[0238] In one or more embodiments of the present disclosure, the movable body (vehicle) **23** includes the display system **200**. The display device **1**, **1**A, **1**A', **1**B, or **1**C, which is small, can avoid using a large space inside the driver's cabin in the vehicle **23** and avoid interfering with driving. This allows the user **22** to appropriately view the virtual image V or the real image. The display system **200** may be used in a digital rearview mirror in the vehicle **23** or in digital sideview mirrors **1**L and **1**R (refer to FIG. **12**). The display system **200** may be used in, for example, the cluster **29**, the CID **30**, or the PID **31** in the dashboard in the vehicle **23**, or in the RSE system **32** (refer to FIGS. **10** and **12**).

[0239] In one or more embodiments of the present disclosure, the display device can be small, have less deterioration in display quality, and have higher light use efficiency. In one or more embodiments of the present disclosure, the imaging device can be small and allow a user to view a virtual image with high visibility.

[0240] Although embodiments of the present disclosure have been described in detail, the present disclosure is not limited to the above embodiments, and may be changed or varied variously without departing from the spirit and scope of the present disclosure. The technical features described in different embodiments may be combined as appropriate in other embodiments within the technical scope of the invention in the present disclosure. For example, the functions of the components are reconfigurable unless any contradiction arises. Multiple components may be combined into a single unit, or a single component may be divided into separate units. In other words, those skilled in the art can easily make various variations or alterations based on one or more embodiments of the present disclosure. Such changes, variations, or alterations also fall within the scope of the present disclosure.

[0241] The display device according to one or more embodiments of the present disclosure may have aspects (1) to (48) described below.

[0242] (1) A display device, comprising:

[0243] a display panel configured to emit display light being linearly polarized light;

[0244] a first retarder facing the display panel;

[0245] a second retarder spaced from the first retarder;

[0246] a reflective polarizer configured to transmit polarized light having a polarization axis parallel to a polarization axis of the display light and reflect polarized light having a polarization axis perpendicular to the polarization axis of the display light; and

[0247] a semitransmissive mirror between the first retarder and the second retarder, the semitransmissive mirror including a reflective surface facing the second retarder,

[0248] wherein each of the first retarder and the second retarder is a quarter-wave plate.

[0249] (1') A display device, comprising:

[0250] a display panel configured to emit display light;

[0251] a first retarder facing the display panel;

[0252] a second retarder spaced from the first retarder;

[0253] a reflective polarizer facing the second retarder, the reflective polarizer being configured to transmit first polarized light and reflect second polarized light; and

[0254] a semitransmissive mirror between the first retarder and the second retarder, the semitransmissive mirror including a reflective surface facing the second retarder,

[0255] wherein the first retarder and the second retarder are configured to convert the display light to the first polarized light and the second polarized light.

[0256] (2) The display device according to (1), wherein

[0257] the first retarder and the second retarder are spaced from each other with air between the first retarder and the second retarder.

[0258] (3) The display device according to (1) or (2), further comprising:

[0259] a third retarder between the display panel and the reflective polarizer.

[0260] (4) The display device according to (3), further comprising:

[0261] a fourth retarder between the display panel and the reflective polarizer.

[0262] (5) The display device according to (4), wherein

[0263] one of the third retarder or the fourth retarder is a quarter-wave plate, and the other of the third retarder or the fourth retarder is a half-wave plate.

[0264] (6) The display device according to (4), wherein

[0265] each of the third retarder and the fourth retarder is a half-wave plate.

[0266] (7) The display device according to any one of (1) to (6), wherein

[0267] the reflective surface of the semitransmissive mirror is concave.

[0268] (8) The display device according to any one of (1) to (6), wherein

[0269] the semitransmissive mirror is an optical element being a flat plate including a holographic optical element.

[0270] (9) The display device according to any one of (1) to (6), wherein the semitransmissive mirror includes a Fresnel lens.

[0271] (10) The display device according to (8) or (9), wherein

[0272] the semitransmissive mirror is integral with at least one of the first retarder or the second retarder.

[0273] (11) A display device, comprising:

[0274] a display panel configured to emit display light being linearly polarized light;

[0275] a first retarder facing the display panel;

[0276] a second retarder spaced from the first retarder;

[0277] a first semitransmissive mirror between the display panel and the first retarder, the first semitransmissive mirror including a first reflective surface facing the first retarder;

[0278] a second semitransmissive mirror between the first retarder and the second retarder, the second semitransmissive mirror including a second reflective surface facing the first retarder; and

[0279] a polarizer facing the second retarder,

[0280] wherein each of the first retarder and the second retarder is a quarter-wave plate.

[0281] (11') A display device, comprising:

[0282] a display panel configured to emit display light;

[0283] a first retarder facing the display panel;

[0284] a second retarder spaced from the first retarder;

[0285] a first semitransmissive mirror between the display panel and the first retarder, the first semitransmissive mirror including a first reflective surface facing the first retarder;

[0286] a second semitransmissive mirror between the first retarder and the second retarder, the second semitransmissive mirror including a second reflective surface facing the first retarder; and

[0287] a polarizer facing the second retarder,

[0288] wherein the first retarder and the second retarder are configured to convert the display light to first polarized light to be transmitted through the polarizer and second polarized light to be transmitted through the polarizer with less transmission than the first polarized light.

[0289] (12) The display device according to (11), wherein

[0290] the second reflective surface is a surface convex toward the first retarder.

[0291] (13) The display device according to (11) or (12), wherein

[0292] the first semitransmissive mirror and the first retarder are spaced from each other with air between the first semitransmissive mirror and the first retarder.

[0293] (14) The display device according to any one of (11) to (13), further comprising:

[0294] a third retarder between the display panel and the polarizer.

[0295] (15) The display device according to (14), further comprising:

[0296] a fourth retarder between the display panel and the polarizer.

[0297] (16) The display device according to (15), wherein

[0298] one of the third retarder or the fourth retarder is a quarter-wave plate, and the other of the third retarder or the fourth retarder is a half-wave plate.

[0299] (17) The display device according to (15), wherein

[0300] each of the third retarder and the fourth retarder is a half-wave plate.

[0301] (18) The display device according to any one of (11) to (17), wherein

[0302] the first reflective surface is concave.

[0303] (19) The display device according to any one of (11) to (17), wherein

[0304] each of the first semitransmissive mirror and the second semitransmissive mirror is an optical element being a flat plate including a holographic optical element.

[0305] (20) The display device according to any one of (11) to (17), wherein

[0306] each of the first semitransmissive mirror and the second semitransmissive mirror includes a Fresnel lens.

[0307] (21) The display device according to (19) or (20), wherein

[0308] the first semitransmissive mirror is integral with at least one of the display panel or the first retarder.

[0309] (22) The display device according to (19) or (20), wherein

[0310] the second semitransmissive mirror is integral with at least one of the first retarder or the second retarder.

[0311] (23) A display device, comprising:

[0312] a display panel configured to emit display light being linearly polarized light;

[0313] a first retarder facing the display panel;

[0314] a second retarder spaced from the first retarder;

[0315] a first semitransmissive mirror between the display panel and the first retarder, the first semitransmissive mirror including a first reflective surface facing the first retarder;

[0316] a second semitransmissive mirror between the first retarder and the second retarder, the second semitransmissive mirror including a second reflective sur-

face facing the first retarder and a third reflective surface facing the second retarder; and

[0317] a third semitransmissive mirror including a fourth reflective surface facing the second retarder,

[0318] wherein each of the first retarder and the second retarder is a quarter-wave plate.

[0319] (23') A display device, comprising:

[0320] a display panel configured to emit display light;

[0321] a first retarder configured to transmit the display light;

[0322] a second retarder spaced from the first retarder;

[0323] a first semitransmissive mirror between the display panel and the first retarder, the first semitransmissive mirror including a first reflective surface facing the first retarder;

[0324] a second semitransmissive mirror between the first retarder and the second retarder, the second semitransmissive mirror including a second reflective surface facing the first retarder and a third reflective surface facing the second retarder; and

[0325] a third semitransmissive mirror including a fourth reflective surface facing the second retarder.

[0326] (24) The display device according to (23), wherein

[0327] the first semitransmissive mirror and the first retarder are spaced from each other with air between the first semitransmissive mirror and the first retarder, and the third semitransmissive mirror and the second retarder are spaced from each other with air between the third semitransmissive mirror and the second retarder.

[0328] (25) The display device according to (23) or (24), wherein

[0329] each of the first reflective surface and the fourth reflective surface is concave.

[0330] (26) The display device according to (23) or (24), wherein

[0331] each of the first semitransmissive mirror and the third semitransmissive mirror is an optical element being a flat plate including a holographic optical element.

[0332] (27) The display device according to (23) or (24), wherein

[0333] each of the first semitransmissive mirror and the third semitransmissive mirror includes a Fresnel lens.

[0334] (28) The display device according to (26) or (27), wherein

[0335] the first semitransmissive mirror is integral with at least one of the display panel or the first retarder.

[0336] (29) The display device according to any one of (26) to (28), wherein

[0337] the second semitransmissive mirror is integral with the second retarder.

[0338] (30) The display device according to any one of (1) to (29), wherein

[0339] the display light includes display light of a left-eye image and display light of a right-eye image, and

[0340] the display device further comprises an optical element configured to define a traveling direction of the display light of the left-eye image and a traveling direction of the display light of the right-eye image.

[0341] (31) An imaging device, comprising:

[0342] the display device according to any one of (1) to (30).

[0343] (32) The imaging device according to (31), wherein

[0344] the imaging device is configured to project a virtual image in a field of view of a user, and the virtual image includes a binocular viewable area viewable with a left eye and a right eye of the user, a left-eye viewable area viewable with the left eye without the right eye, and a right-eye viewable area viewable with the right eye without the left eye.

[0345] (33) A display device, comprising:

[0346] a display panel;

[0347] an optical system configured to project display light emitted from the display panel as a virtual image or a real image; and

[0348] a housing accommodating the display panel and the optical system,

[0349] wherein the housing includes a window configured to transmit light emitted from the optical system, and

[0350] the window, the optical system, and the display panel overlap one another when viewed through the window in the housing.

[0351] (34) The display device according to (33), wherein

[0352] the housing includes a light-transmissive plate in the window.

[0353] (35) The display device according to (34), further comprising:

[0354] a touchscreen attached to the housing and covering the light-transmissive plate.

[0355] (36) The display device according to any one of (1) to (30) and (33) to (35), further comprising:

[0356] an illuminator configured to illuminate a surface of the display panel opposite to a display surface of the display panel.

[0357] (37) The display device according to any one of (1) to (30) and (33) to (36), further comprising:

[0358] a controller configured to control at least one of an image displayed on the display panel or the illuminator.

[0359] (38) A vehicle, comprising:

[0360] the display device according to (37).

[0361] (39) A display device, comprising:

[0362] a display panel configured to emit display light being linearly polarized light;

[0363] a first retarder facing the display panel;

[0364] a second retarder spaced from the first retarder;

[0365] a reflective polarizer configured to transmit polarized light having a polarization axis parallel to a polarization axis of the display light and reflect polarized light having a polarization axis perpendicular to the polarization axis of the display light; and

[0366] a semitransmissive mirror between the first retarder and the second retarder, the semitransmissive mirror including a reflective surface facing the second retarder,

[0367] wherein each of the first retarder and the second retarder is a quarter-wave plate, and

[0368] an optical path length of light emitted from the display panel, transmitted through the semitransmissive mirror, reflected by the reflective polarizer, and

reaching the semitransmissive mirror is shorter than a focal length of the semitransmissive mirror.

[0369] (40) A display device, comprising:

[0370] a display panel configured to emit display light being linearly polarized light;

[0371] a first retarder facing the display panel;

[0372] a second retarder spaced from the first retarder;

[0373] a reflective polarizer configured to transmit polarized light having a polarization axis parallel to a polarization axis of the display light and reflect polarized light having a polarization axis perpendicular to the polarization axis of the display light; and

[0374] a semitransmissive mirror between the first retarder and the second retarder, the semitransmissive mirror including a reflective surface facing the second retarder,

[0375] wherein each of the first retarder and the second retarder is a quarter-wave plate, and

[0376] an optical path length of light emitted from the display panel, transmitted through the semitransmissive mirror, reflected by the reflective polarizer, and reaching the semitransmissive mirror is longer than a focal length of the semitransmissive mirror.

[0377] (41) A display device, comprising:

[0378] a display panel configured to emit display light being linearly polarized light;

[0379] a first retarder configured to transmit the display light;

[0380] a second retarder spaced from the first retarder;

[0381] a first semitransmissive mirror between the display panel and the first retarder, the first semitransmissive mirror including a first reflective surface facing the first retarder;

[0382] a second semitransmissive mirror between the first retarder and the second retarder, the second semitransmissive mirror including a second reflective surface facing the first retarder; and

[0383] a polarizer facing the second retarder,

[0384] wherein each of the first retarder and the second retarder is a quarter-wave plate, and

[0385] an optical path length of light emitted from the display panel, transmitted through the first semitransmissive mirror, reflected by the second semitransmissive mirror, and reaching the first semitransmissive mirror is shorter than a focal length of the first semitransmissive mirror.

[0386] (42) A display device, comprising:

[0387] a display panel configured to emit display light being linearly polarized light;

[0388] a first retarder configured to transmit the display light;

[0389] a second retarder spaced from the first retarder;

[0390] a first semitransmissive mirror between the display panel and the first retarder, the first semitransmissive mirror including a first reflective surface facing the first retarder;

[0391] a second semitransmissive mirror between the first retarder and the second retarder, the second semitransmissive mirror including a second reflective surface facing the first retarder; and

[0392] a polarizer facing the second retarder,

[0393] wherein each of the first retarder and the second retarder is a quarter-wave plate, and

[0394] an optical path length of light emitted from the display panel, transmitted through the first semitransmissive mirror, reflected by the second semitransmissive mirror, and reaching the first semitransmissive mirror is longer than a focal length of the first semitransmissive mirror.

[0395] (43) A display device, comprising:

[0396] a display panel configured to emit display light being linearly polarized light;

[0397] a first retarder configured to transmit the display light;

[0398] a second retarder spaced from the first retarder;

[0399] a first semitransmissive mirror between the display panel and the first retarder, the first semitransmissive mirror including a first reflective surface facing the first retarder;

[0400] a second semitransmissive mirror between the first retarder and the second retarder, the second semitransmissive mirror including a second reflective surface facing the first retarder and a third reflective surface facing the second retarder; and

[0401] a third semitransmissive mirror including a fourth reflective surface facing the second retarder,

[0402] wherein each of the first retarder and the second retarder is a quarter-wave plate, and

[0403] an optical path length of light emitted from the display panel, transmitted through the first semitransmissive mirror, reflected by the second semitransmissive mirror, and reaching the first semitransmissive mirror is shorter than a focal length of the first semitransmissive mirror, and an optical path length of light emitted from the display panel, transmitted through the first semitransmissive mirror, transmitted through the second semitransmissive mirror, and reaching the third semitransmissive mirror is shorter than the focal length of the first semitransmissive mirror.

[0404] (44) A display device, comprising:

[0405] a display panel configured to emit display light being linearly polarized light;

[0406] a first retarder configured to transmit the display light;

[0407] a second retarder spaced from the first retarder;

[0408] a first semitransmissive mirror between the display panel and the first retarder, the first semitransmissive mirror including a first reflective surface facing the first retarder;

[0409] a second semitransmissive mirror between the first retarder and the second retarder, the second semitransmissive mirror including a second reflective surface facing the first retarder and a third reflective surface facing the second retarder; and

[0410] a third semitransmissive mirror including a fourth reflective surface facing the second retarder,

[0411] wherein each of the first retarder and the second retarder is a quarter-wave plate, and an optical path length of light emitted from the display panel, transmitted through the first semitransmissive mirror, reflected by the second semitransmissive mirror, and reaching the first semitransmissive mirror is longer than a focal length of the first semitransmissive mirror, and an optical path length of light emitted from the display panel, transmitted through the first semitransmissive mirror, transmitted through the second semitransmis-

sive mirror, and reaching the third semitransmissive mirror is longer than the focal length of the first semitransmissive mirror.

[0412] (45) A display device, comprising:

[0413] a display panel configured to emit display light; and

[0414] a convex lens through which the display light is transmitted,

[0415] wherein an optical path length from the display panel to the convex lens is shorter than a focal length of the convex lens.

[0416] (46) A display device, comprising:

[0417] a display panel configured to emit display light; and

[0418] a convex lens through which the display light is transmitted,

[0419] wherein an optical path length from the display panel to the convex lens is longer than a focal length of the convex lens.

[0420] (47) A display system, comprising:

[0421] the display device according to any one of (1) to (30), (33) to (37), and (39) to (46); and a camera,

[0422] wherein the display panel is configured to communicate with the camera and display an image captured by the camera.

[0423] (48) A vehicle, comprising:

[0424] the display system according to (47).

REFERENCE SIGNS

[0425] **1**, **1**A, **1**A', **1**B display device
[0426] **2** display panel
[0427] **2***a* display surface
[0428] **3** optical system
[0429] **4** illuminator
[0430] **5** first retarder
[0431] **6** semitransmissive mirror
[0432] **6***a* reflective surface
[0433] **7** second retarder
[0434] **8** reflective polarizer
[0435] **9** optical element
[0436] **10** optical system
[0437] **11** first semitransmissive mirror
[0438] **11***a* reflective surface
[0439] **12** first retarder
[0440] **13**, **13'** second semitransmissive mirror
[0441] **13***a*, **13'***a* reflective surface
[0442] **14** second retarder
[0443] **15** polarizer
[0444] **16** optical system
[0445] **17** first semitransmissive mirror
[0446] **17***a* reflective surface
[0447] **18** first retarder
[0448] **19** second semitransmissive mirror
[0449] **19***a* reflective surface
[0450] **19***b* reflective surface
[0451] **20** second retarder
[0452] **21** third semitransmissive mirror
[0453] **21***a* reflective surface
[0454] **22** user
[0455] **22**L left eye
[0456] **22**R right eye
[0457] **23** movable body
[0458] **24** windshield
[0459] **25** third retarder
[0460] **26** fourth retarder
[0461] **27** housing
[0462] **28** opening
[0463] **29** cluster
[0464] **30** CID
[0465] **31** PID
[0466] **32** RSE
[0467] **33** Fresnel lens
[0468] **33***a* first surface
[0469] **33***b* second surface
[0470] **33***c* reference point
[0471] **34** semitransmissive reflective layer
[0472] **35** optical system
[0473] **36** housing
[0474] **37** window
[0475] **38** light-transmissive plate
[0476] **40**, **39** moth-eye film
[0477] **41** touchscreen
[0478] **42** convex lens
[0479] **43** controller
[0480] **100** imaging device
[0481] **101** reflective optical element
[0482] **102** camera
[0483] **200** display system
[0484] **201** camera

1. A display device, comprising:

a display panel configured to emit display light; and

an optical system configured to form an image of the display light,

wherein the optical system includes a reflective polarizer,

a first retarder located between the display panel and the reflective polarizer,

a second retarder located between the first retarder and the reflective polarizer, and

a first semitransmissive mirror located between the first retarder and the second retarder, the first semitransmissive mirror including a first reflective surface and having a larger light condensing power than the other members of the optical system.

2. The display device according to claim **1**, wherein

the first reflective surface comprises a concave surface having a curvature larger than that of the other members of the optical system.

3. The display device according to claim **1**, wherein

the optical system does not comprise any lenses, except for the first semitransmissive mirror.

4. The display device according to claim **1**, wherein

the optical system further comprise the first semitransmissive mirror as a only member configured to condens the display light.

5. The display device according to claim **1**, further comprising

Air being between the first retarder and the second retarder.

6. The display device according to claim **1**, further comprising:

a third retarder located between the display panel and the reflective polarizer.

7. The display device according to claim **1**, further comprising:

a fourth retarder located between the display panel and the reflective polarizer.

8. The display device according to claim **1**, wherein
the first retarder is located on a surface of the first semitransmissive mirror.

9. The display device according to claim **1**, wherein
the second retarder is located on a surface of the first semitransmissive mirror.

10. The display device according to claims **1**, wherein
the first semitransmissive mirror has a Fresnel shape.

11. The display device according to claims **1**, wherein
the first semitransmissive mirror comprises a holographic optical element.

12. The display device according to claims **1**, wherein
the optical system further comprises a second semitransmissive mirror.

13. The display device according to claims **1**, further comprising:
an illuminator configured to illuminate a opposite surface of the display panel opposite to a display surface of the display panel.

14. The display device according to claims **13**, further comprising:
a controller configured to control at least one of an image displayed on the display panel and the illuminator.

15. A vehicle, comprising:
the display device according to claim **14**.

16. A vehicle, comprising:
the display device according to claim **1**.

17. A display system, comprising:
the display device according to claims **1**; and
a camera configured to communicate with the display panel of the display device.

18. A vehicle, comprising:
the display system according to claim **17**.

19. An imaging device, comprising:
the display device according to claims **1**.

20. A vehicle, comprising:
the imaging device according to claim **19**.

* * * * *