US 20250278148A1

(19) United States
(12) Patent Application Publication
KIM et al.
(10) Pub. No.: US 2025/0278148 A1
(43) Pub. Date: Sep. 4, 2025

(54) **DISPLAY DEVICE**

(71) Applicant: **LG Display Co., Ltd.**, Seoul (KR)

(72) Inventors: **TaeHwan KIM**, Gyeonggi-do (KR); **DongHee YOO**, Gyeonggi-do (KR); **JungSun BEAK**, Gyeonggi-do (KR); **SunMi LEE**, Gyeonggi-do (KR); **HyeonChul IM**, Gyeonggi-do (KR)

(73) Assignee: **LG Display Co., Ltd.**, Seoul (KR)

(21) Appl. No.: **19/211,950**

(22) Filed: **May 19, 2025**

Related U.S. Application Data

(63) Continuation of application No. 18/522,216, filed on Nov. 28, 2023, now Pat. No. 12,333,102, which is a continuation of application No. 17/884,534, filed on Aug. 9, 2022, now Pat. No. 11,907,454, which is a continuation of application No. 17/553,258, filed on Dec. 16, 2021, now Pat. No. 11,726,594, which is a continuation of application No. 17/080,090, filed on Oct. 26, 2020, now Pat. No. 11,237,659.

(30) **Foreign Application Priority Data**

Nov. 5, 2019 (KR) 10-2019-0140497

Publication Classification

(51) **Int. Cl.**

G06F 3/041	(2006.01)
G06F 3/044	(2006.01)
G09G 3/3233	(2016.01)
H10K 50/844	(2023.01)
H10K 50/856	(2023.01)
H10K 59/122	(2023.01)
H10K 59/131	(2023.01)
H10K 59/40	(2023.01)
H10K 59/80	(2023.01)

(52) **U.S. Cl.**

CPC ***G06F 3/0412*** (2013.01); ***G06F 3/04164*** (2019.05); ***G06F 3/0443*** (2019.05); ***H10K 50/844*** (2023.02); ***H10K 50/856*** (2023.02); ***H10K 59/122*** (2023.02); ***H10K 59/131*** (2023.02); ***H10K 59/40*** (2023.02); ***H10K 59/878*** (2023.02); *G06F 3/0446* (2019.05); *G06F 2203/04102* (2013.01); *G06F 2203/04103* (2013.01); *G06F 2203/04111* (2013.01); *G06F 2203/04112* (2013.01); *G09G 3/3233* (2013.01); *G09G 2300/0452* (2013.01); *G09G 2380/02* (2013.01); *H10K 59/80515* (2023.02); *H10K 59/873* (2023.02)

(57) **ABSTRACT**

A display device includes a substrate, a sub-pixel on the substrate and including an organic light emitting diode, an encapsulation layer on the organic light emitting diode, and a plurality of touch electrodes on the encapsulation layer, the plurality of touch electrodes including an open area. The sub-pixel may include first and second emission areas and a first non-emission area in the open area of the plurality of touch electrodes, the first non-emission area being configured to be in a black state or to have a lower brightness than the first and second emission areas. Each of the first non-emission area and at least one of the first and second emission areas may have a shape of an octagon, a circle, an ellipse, a polygon, a triangle, a square, or a hexagon in a plan view.

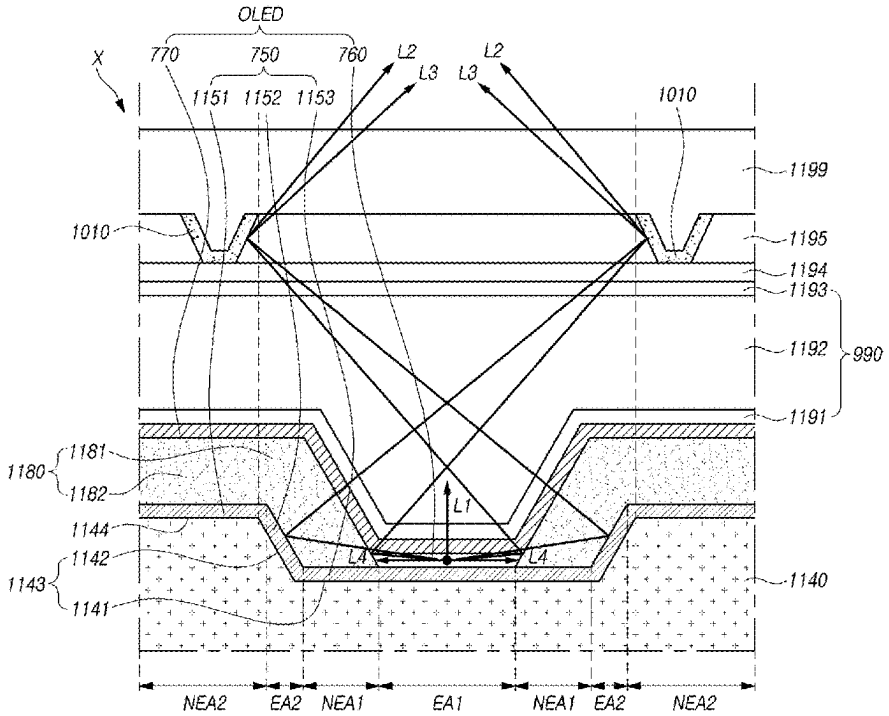

FIG. 1

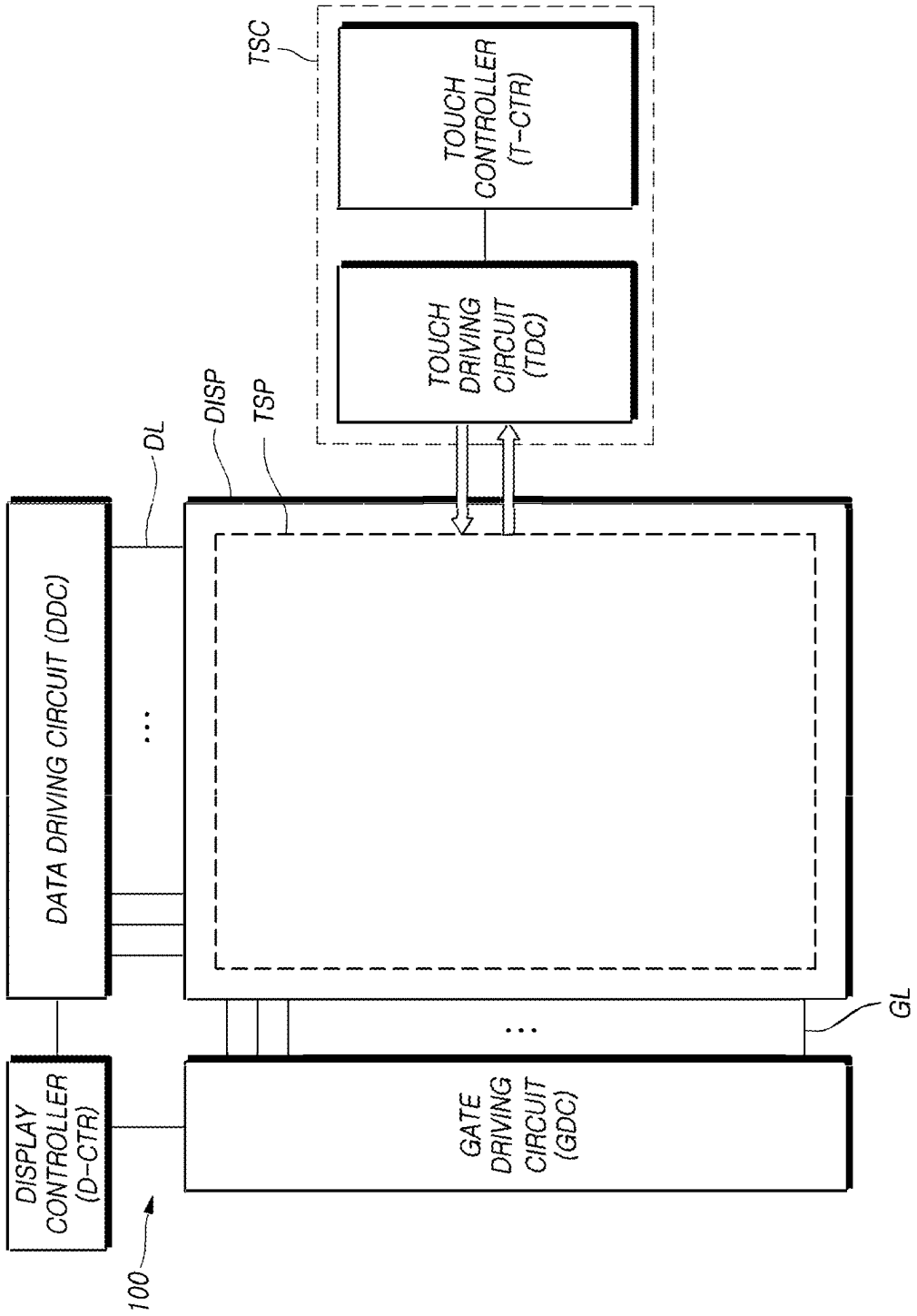
TSC
TOUCH CONTROLLER (T-CTR)
TOUCH DRIVING CIRCUIT (TDC)
DISP
TSP
DL
DATA DRIVING CIRCUIT (DDC)
GL
DISPLAY CONTROLLER (D-CTR)
GATE DRIVING CIRCUIT (GDC)
100

FIG.2

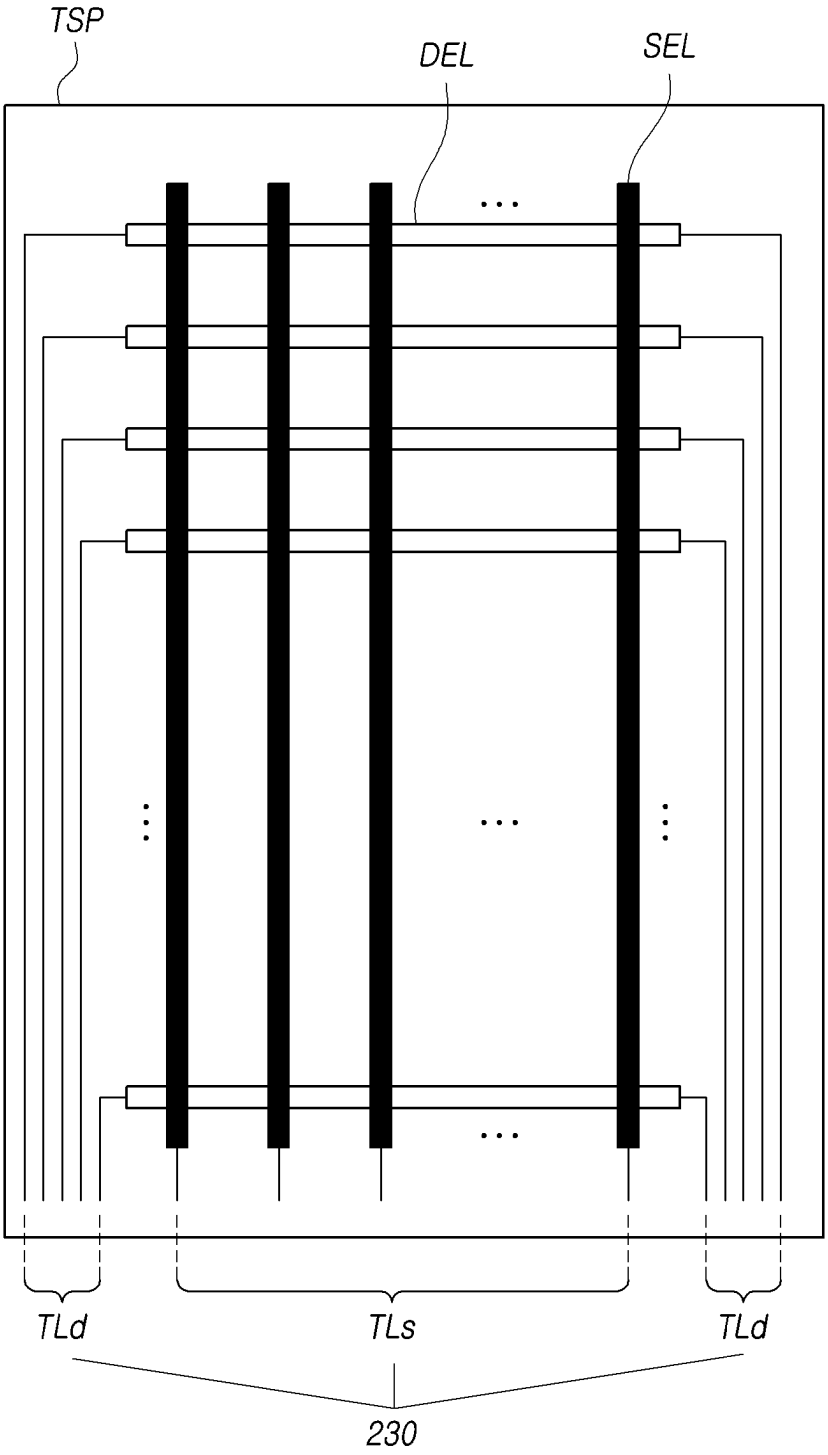

FIG.3

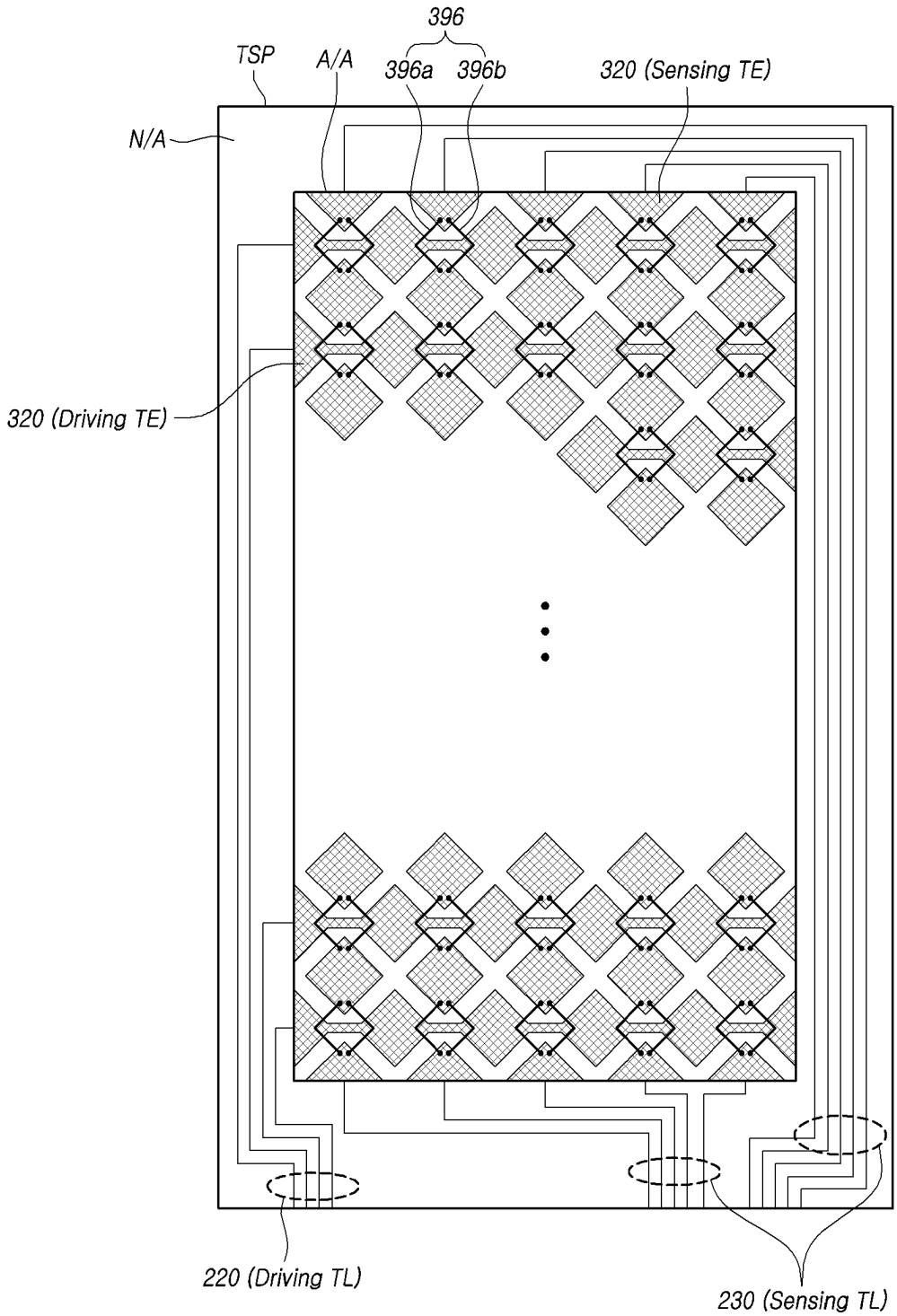
396
TSP
A/A
396a
396b
320 (Sensing TE)
N/A
320 (Driving TE)
220 (Driving TL)
230 (Sensing TL)

FIG.4

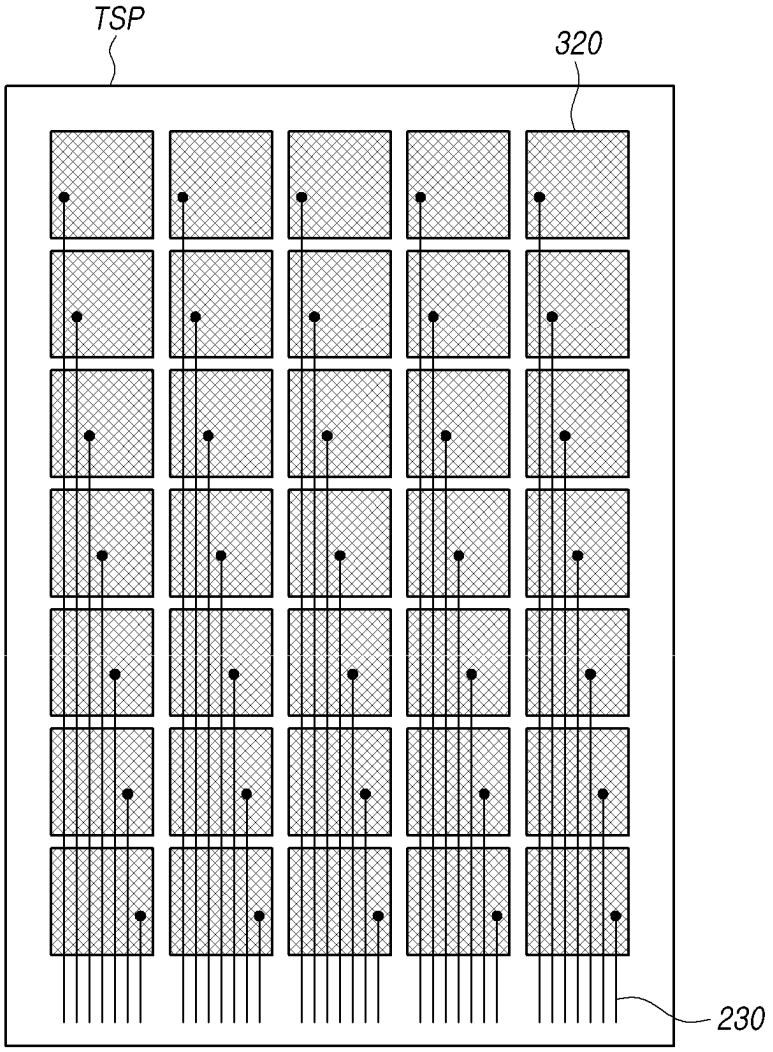

FIG.5

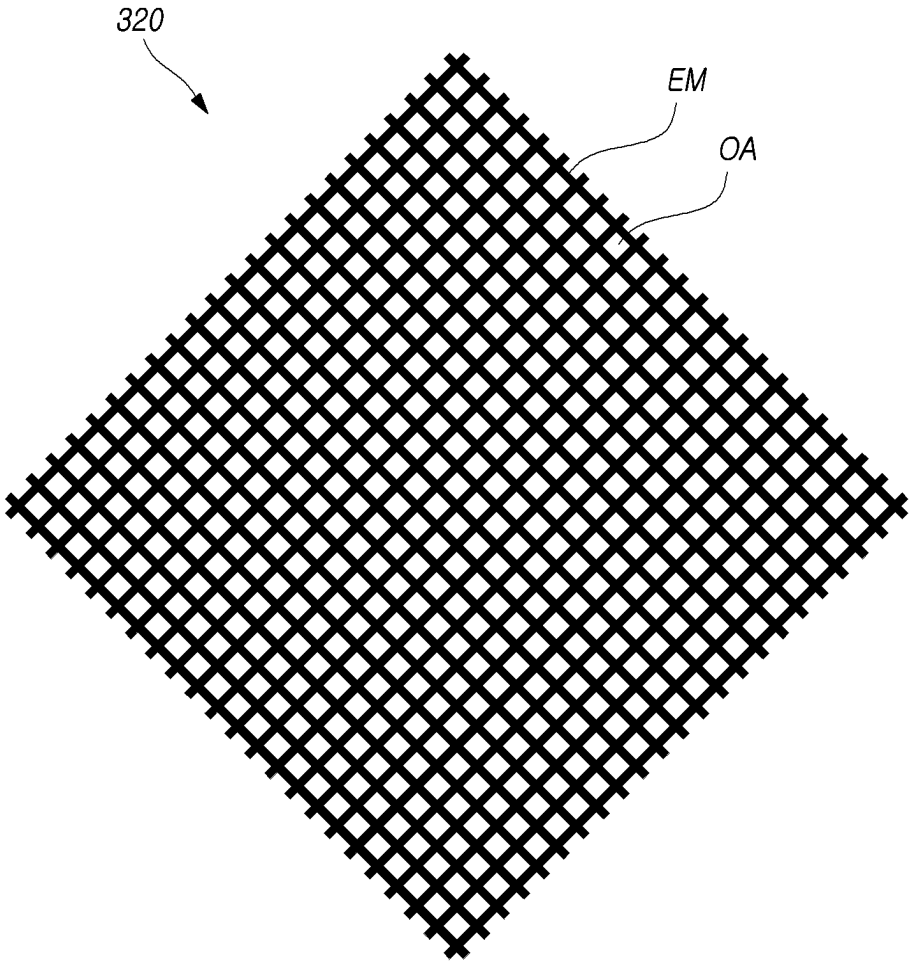

FIG.6

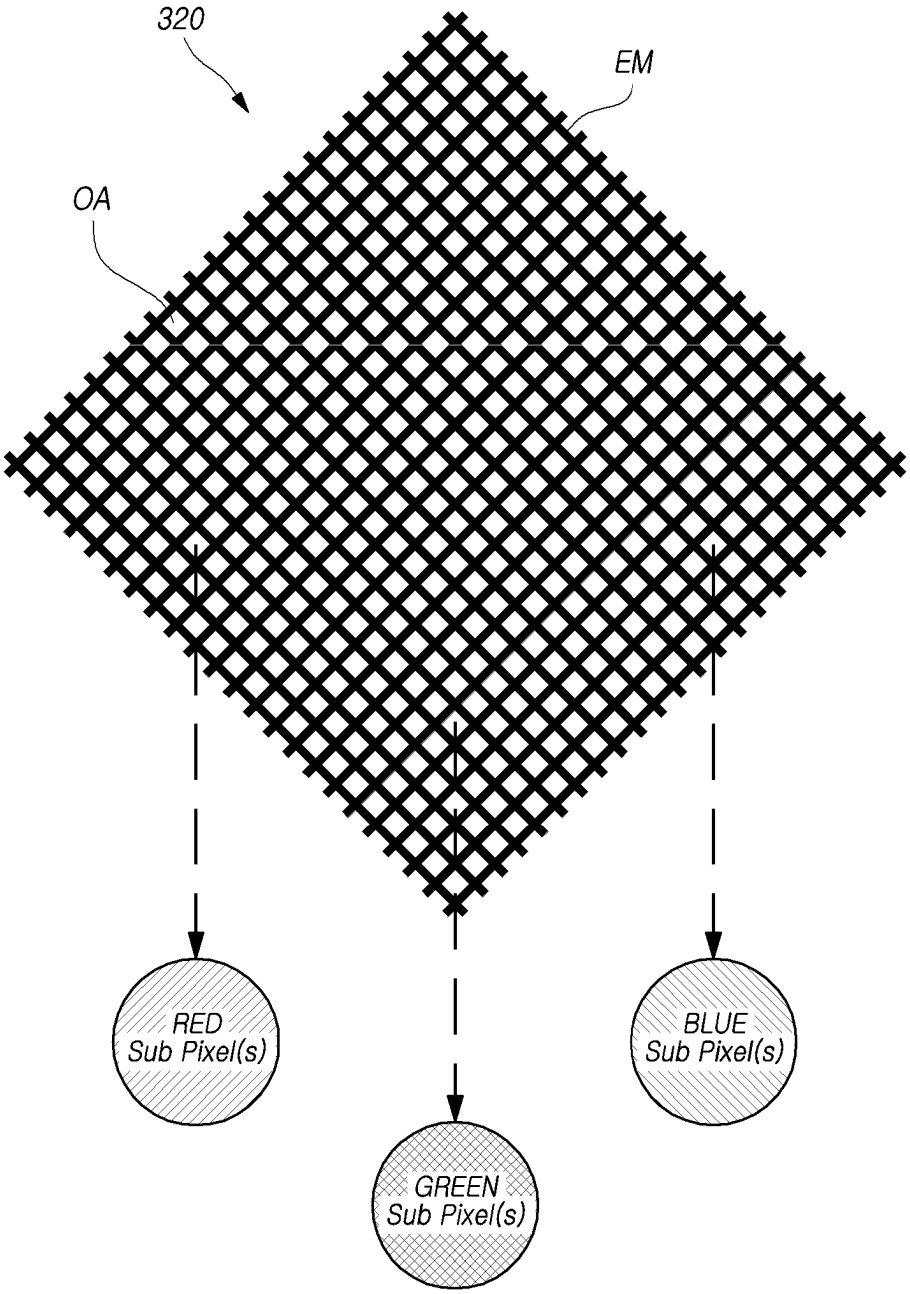

FIG. 7

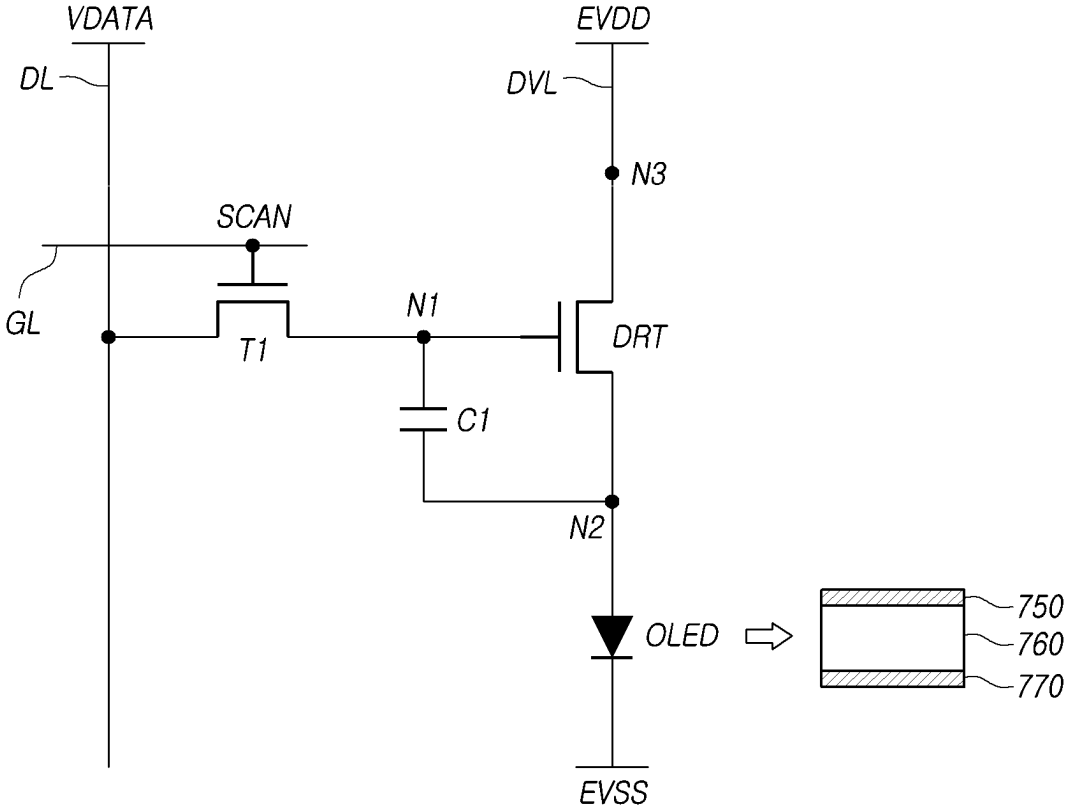
VDATA
EVDD
DL
DVL
N3
SCAN
GL
N1
T1
DRT
C1
N2
OLED
750
760
770
EVSS

FIG. 8

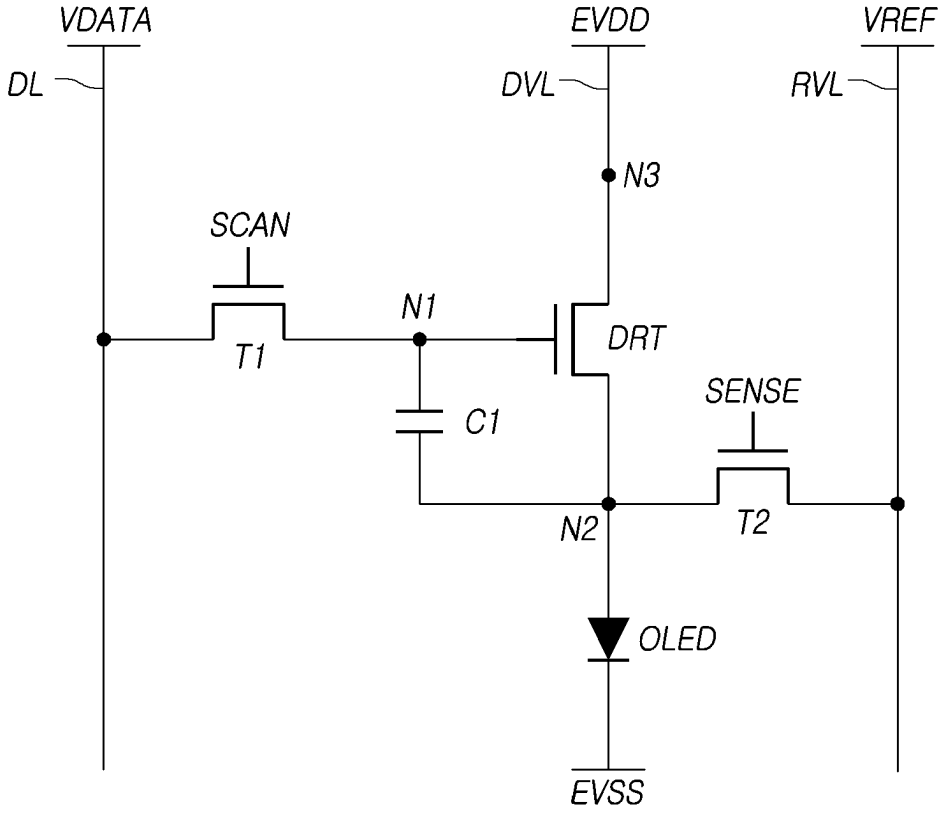
VDATA
EVDD
VREF
DL
DVL
RVL
N3
SCAN
N1
DRT
T1
SENSE
C1
N2
T2
OLED
EVSS

FIG.9

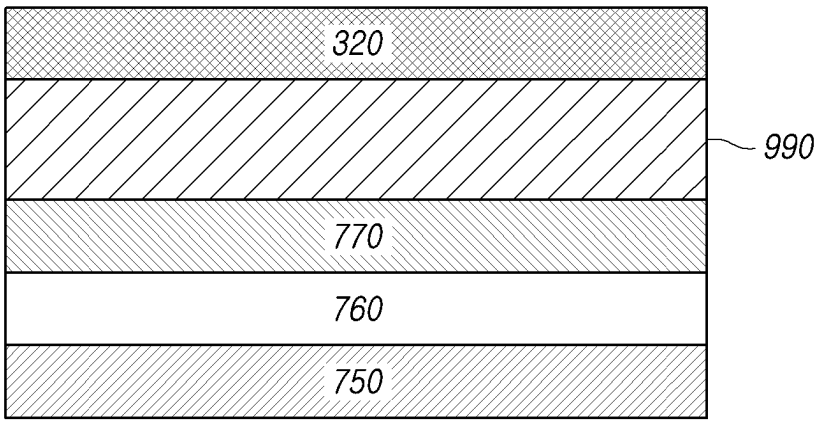

FIG. 10

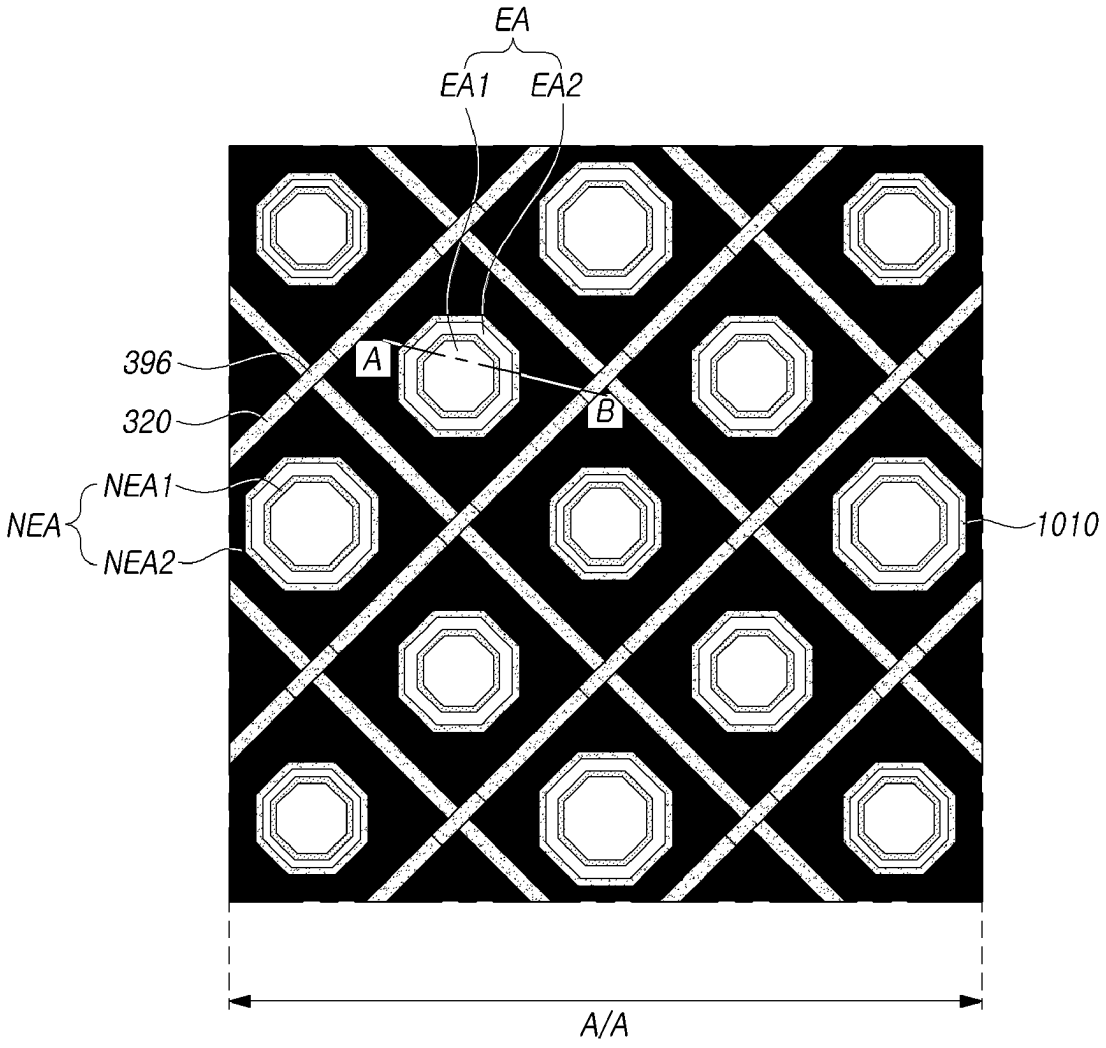

FIG. 11A

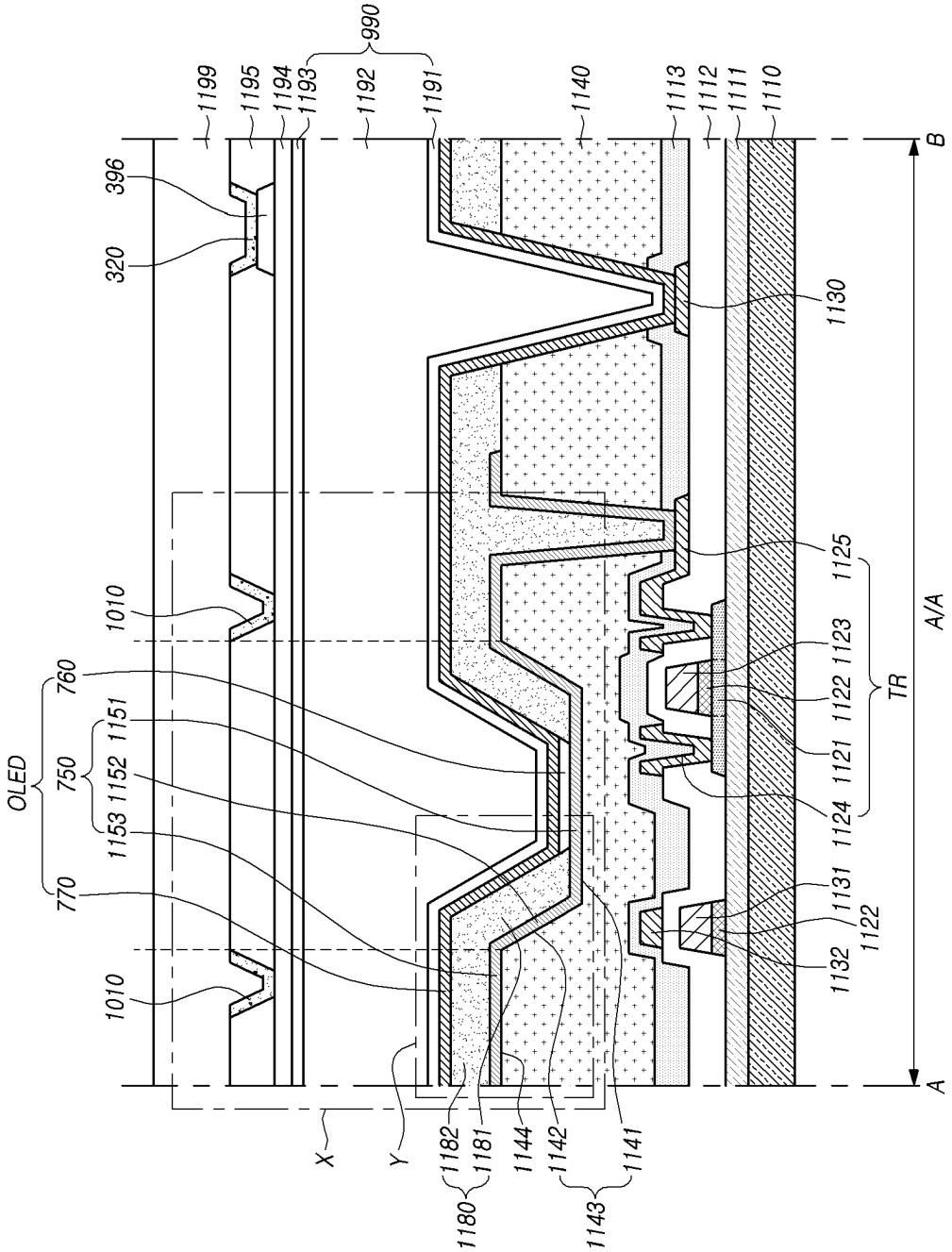
1199
1195
1194
1193
990
1192
1191
1140
1113
1112
1111
1110
B
396
320
1130
1010
1125
A/A
760
1151
1123
1122
TR
OLED
750
1152
1121
1153
1124
770
1131
1122
1132
1010
A
X
Y
1182
1181
1144
1142
1141
1180
1143

FIG. 11B

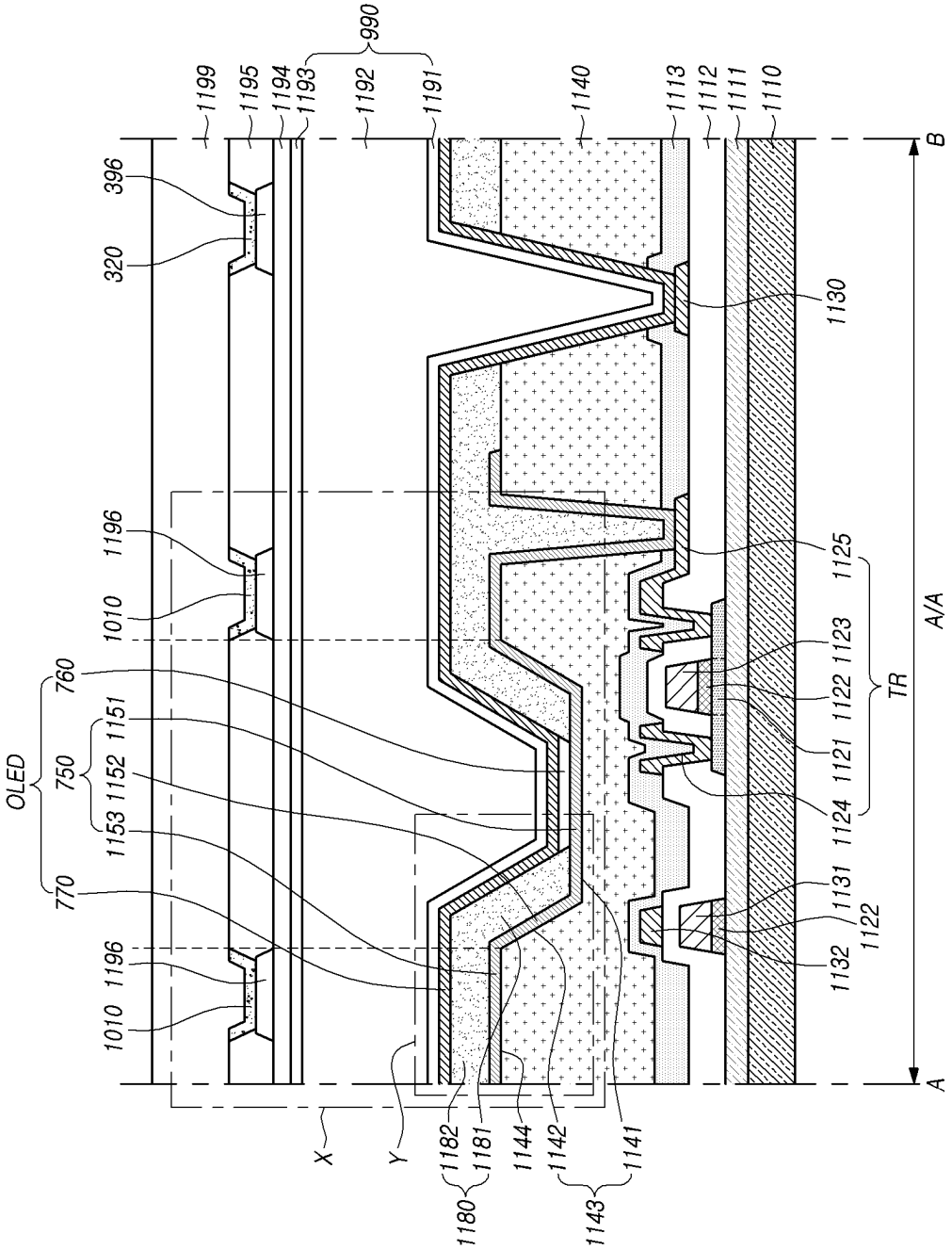
1199
1195
1194
1193
990
1192
1191
1140
1113
1112
1111
1110
B
396
320
1130
1196
1010
1125
A/A
760
1151
1123
1122
1121
1124
TR
OLED
750
1152
1153
770
1131
1122
1132
1196
1010
A
X
Y
1182
1181
1180
1144
1142
1143
1141

FIG. 12

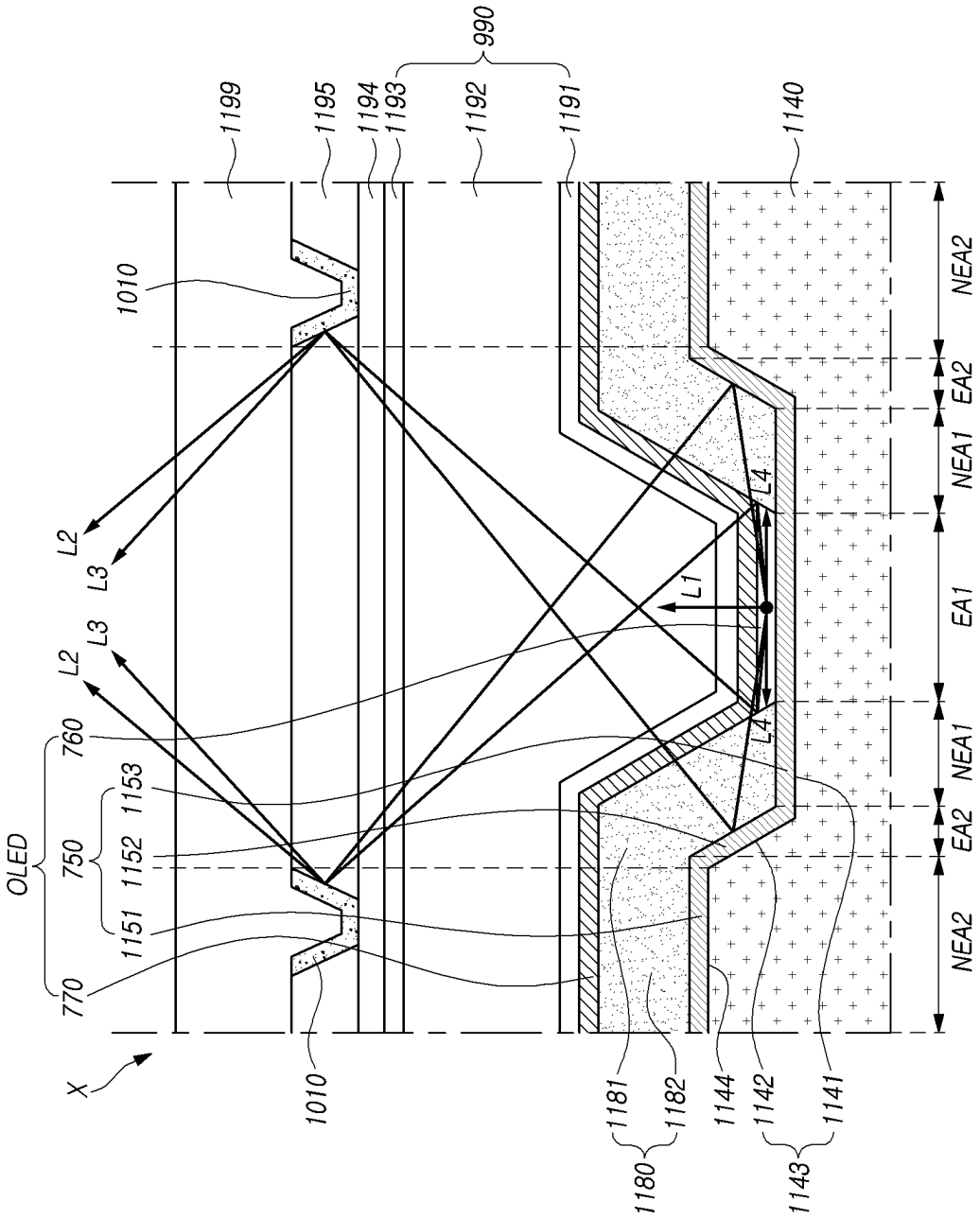
990
1199
1195
1194
1193
1192
1191
1140
1010
L2
L3
L2
L3
760
1153
1152
750
1151
770
OLED
X
1010
1181
1182
1180
1144
1142
1143
1141
L1
L4
L4
NEA2
EA2
NEA1
EA1
NEA1
EA2
NEA2

FIG. 13

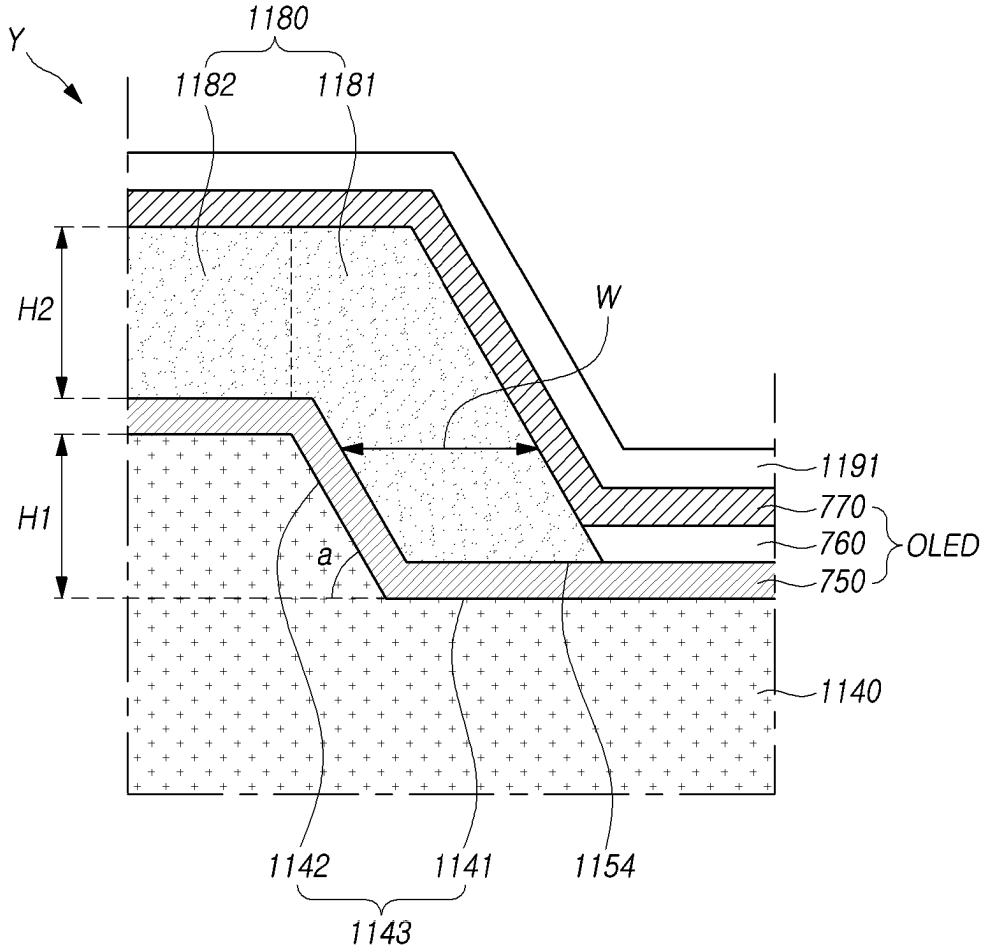
Y
1180
1182
1181
H2
W
H1
a
1191
770
760
750
OLED
1140
1142
1141
1154
1143

FIG. 14

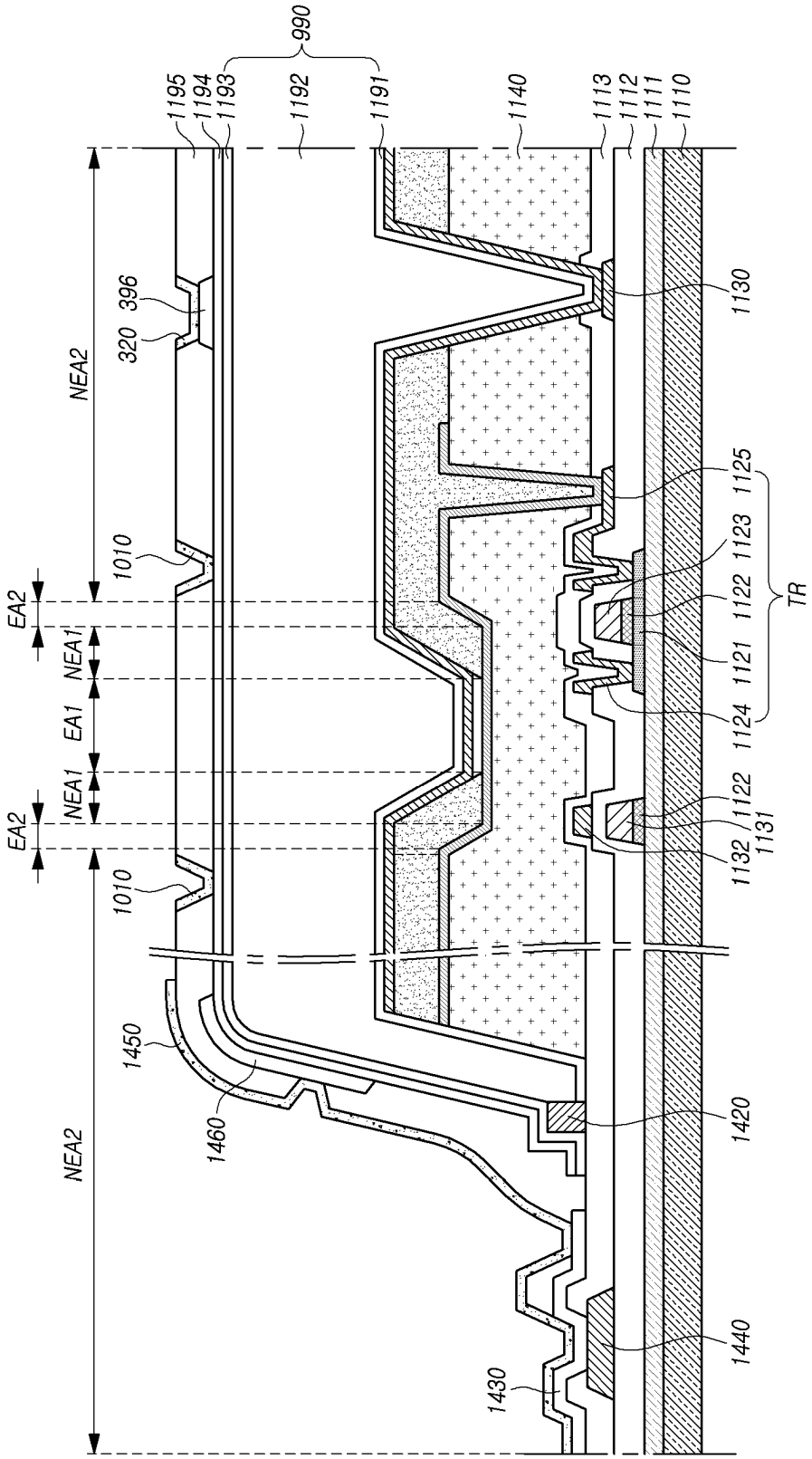
990
1195
1194
1193
1192
1191
1140
1113
1112
1111
1110
396
320
1130
NEA2
1125
1123
1010
1122
TR
EA2
NEA1
1121
EA1
1124
NEA1
1122
1131
EA2
1132
1010
1450
1460
1420
NEA2
1440
1430

FIG. 15

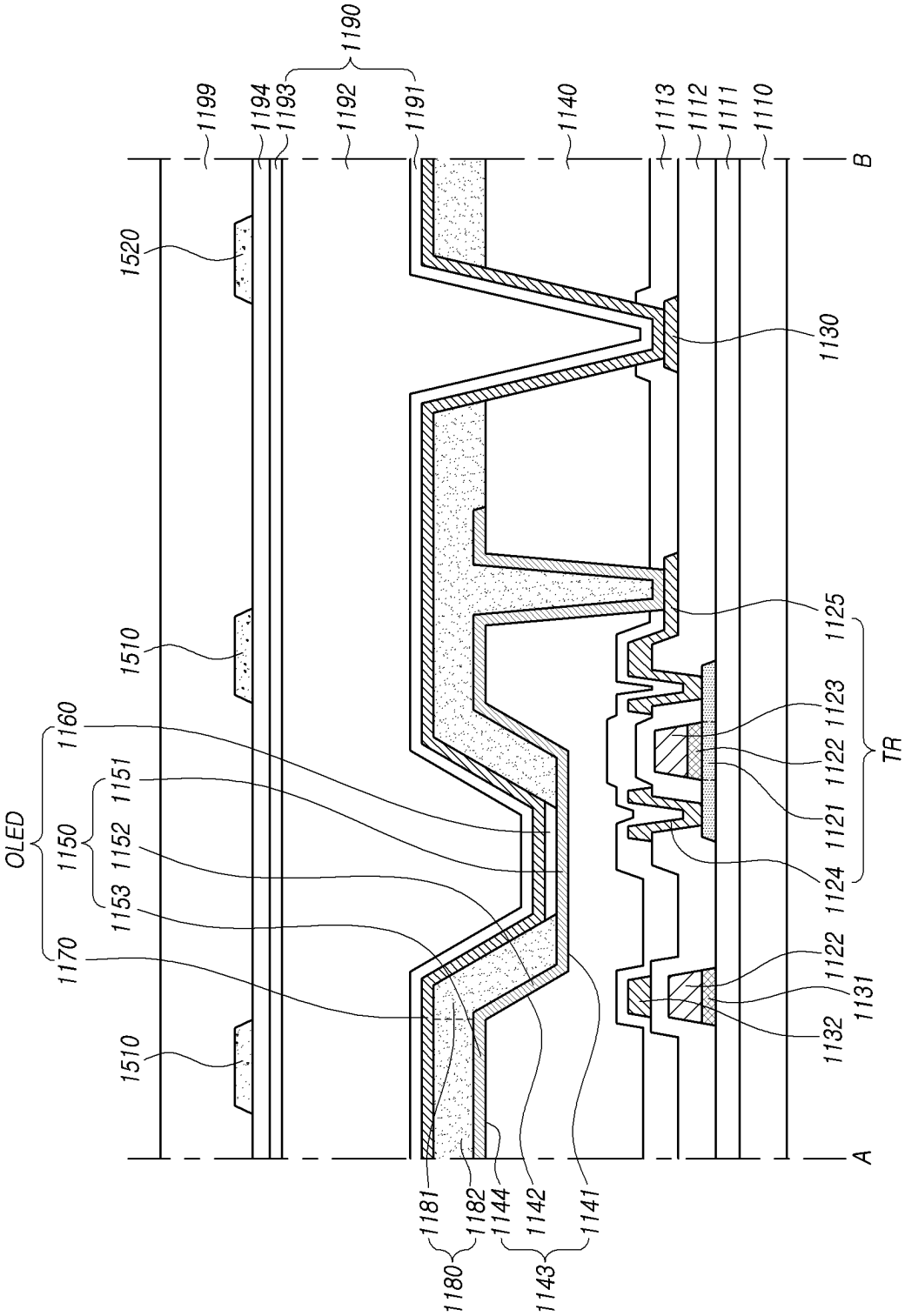
1199
1194
1193
1192
1191
1190
1140
1113
1112
1111
1110
B
1520
1130
1510
1125
1160
1151
1123
1122
TR
OLED
1150
1152
1121
1153
1124
1170
1122
1131
1132
1510
A
1181
1182
1144
1142
1141
1180
1143

FIG. 16

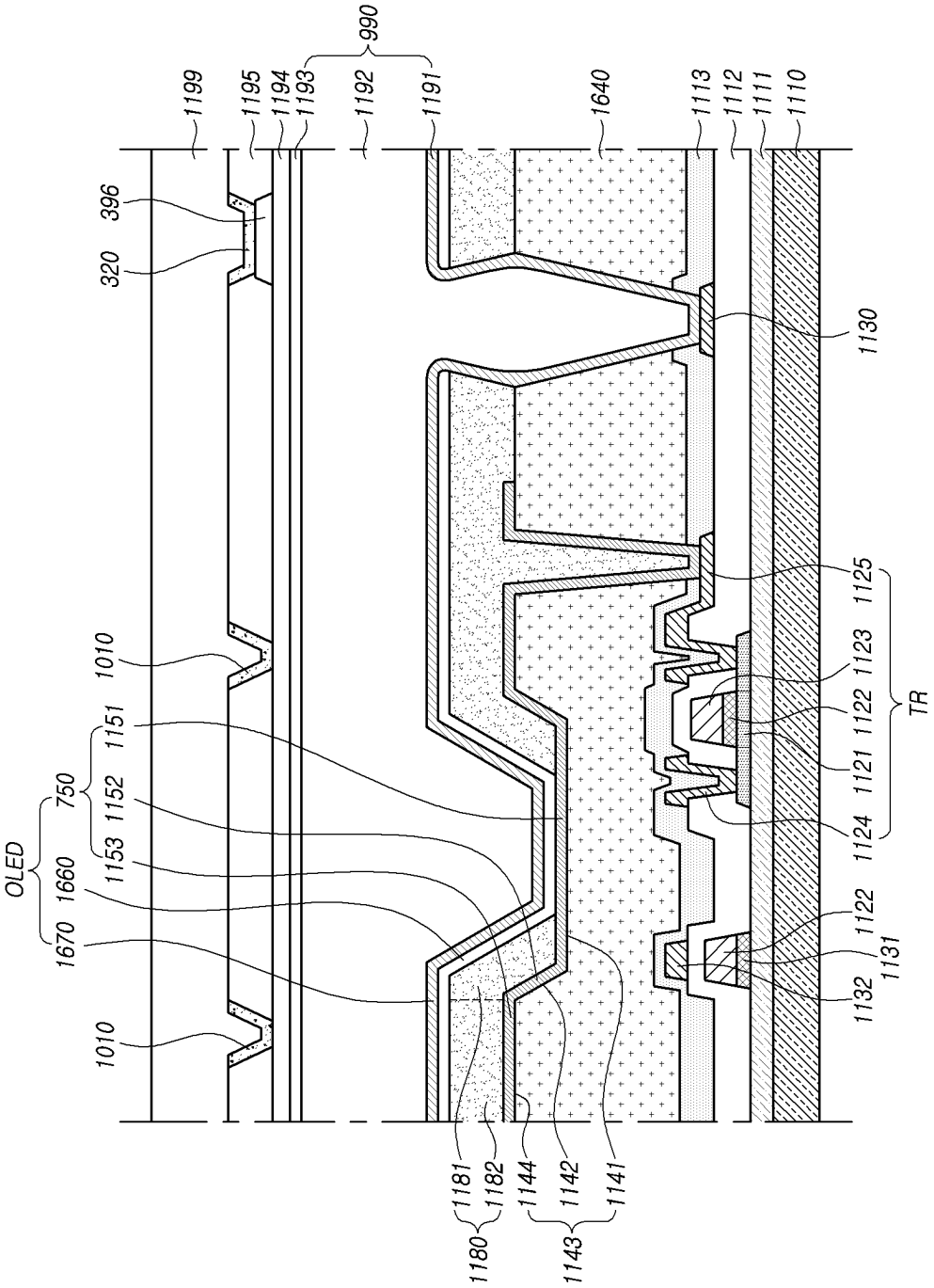
1199
1195
1194
1193
990
1192
1191
1640
1113
1112
1111
1110
396
320
1130
1125
1123
1122
1121
1124
TR
1010
1151
750
1152
1153
OLED
1660
1670
1122
1131
1132
1010
1181
1182
1180
1144
1142
1143
1141

DISPLAY DEVICE

CROSS-REFERENCE TO RELATED APPLICATIONS

[0001] This application is a continuation of co-pending U.S. patent application Ser. No. 18/522,216, filed on Nov. 28, 2023, which is a continuation of U.S. patent application Ser. No. 17/884,534, filed on Aug. 9, 2022, now U.S. Pat. No. 11,907,454, which is a continuation of U.S. patent application Ser. No. 17/553,258, filed on Dec. 16, 2021, now U.S. Pat. No. 11,726,594, which is a continuation of U.S. patent application Ser. No. 17/080,090, filed on Oct. 26, 2020, now U.S. Pat. No. 11,237,659, which claims priority from Korean Patent Application No. 10-2019-0140497, filed on Nov. 5, 2019. Each of the above prior U.S. and Korean patent applications is hereby incorporated by reference for all purposes as if fully set forth herein.

BACKGROUND

Field

[0002] Embodiments of the disclosure relate to touch display devices.

Description of Related Art

[0003] The growth of the information society leads to various needs for image display devices. Recently, various display devices are being used, such as liquid crystal displays, plasma display devices, and organic light emitting display devices.

[0004] Among others, touch display devices provide an input scheme that allows users easier and more intuitive and convenient entry of information or commands without the need for buttons, a keyboard, a mouse, or other typical input means.

[0005] The touch display device should be able to grasp whether the user touches and, if any, precisely sense the coordinates of the touch to provide touch-based entry.

[0006] Conventional touch display devices have a touch panel with a number of touch electrodes arrayed thereon in a complicated layout and thus suffer from difficulty in securing a light emitting area for the display device and enhancing brightness due to various factors, such as the structure, position, or layout of the touch electrodes.

BRIEF SUMMARY

[0007] Embodiments of the disclosure provide a touch display device with enhanced light extraction efficiency.

[0008] Embodiments of the disclosure provide a touch display device with a structure capable of preventing color mixing between two adjacent subpixels.

[0009] Embodiments of the disclosure provide a touch display device with a structure simple to process.

[0010] According to embodiments of the disclosure, there may be provided a touch display device comprising an insulation film including a concave portion and a surrounding portion disposed around the concave portion, the concave portion including a flat portion and an inclined portion surrounding the flat portion, a first electrode disposed on the concave portion and a portion of the surrounding portion, a bank including a first portion disposed on the first electrode in an area corresponding to a portion of the concave portion and a second portion disposed on the insulation film and the first electrode in an area corresponding to the surrounding portion, an organic layer disposed on the first electrode exposed by the bank, the organic layer including a light emitting layer, a second electrode disposed on the organic layer and the bank, an encapsulation layer disposed on the second electrode, a touch buffer layer disposed on the encapsulation layer, a plurality of touch electrodes disposed on the touch buffer layer, and a light reflecting member disposed on the touch buffer layer and spaced apart from the plurality of touch electrodes.

[0011] According to embodiments of the disclosure, there may be provided a touch display device with light extraction efficiency enhanced through at least one concave portion formed in an insulation film and a light reflecting member provided in a non-display area.

[0012] According to embodiments of the disclosure, there may be provided a touch display device with a structure capable of preventing color mixing between adjacent pixels by applying a light reflecting member.

[0013] According to embodiments of the disclosure, there may be provided a touch display device with a structure simple to process by allowing the light reflecting member and the touch electrode to be formed in the same process.

DESCRIPTION OF DRAWINGS

[0014] The above and other objects, features, and advantages of the disclosure will be more clearly understood from the following detailed description, taken in conjunction with the accompanying drawings, in which:

[0015] FIG. **1** is a view illustrating a system configuration of a touch display device according to embodiments of the disclosure;

[0016] FIGS. **2** and **3** are views illustrating an example touch panel TSP when a touch display device senses a touch in a mutual capacitance-based touch sensing scheme according to embodiments of the disclosure;

[0017] FIG. **4** is a view illustrating an example touch panel TSP when a touch display device senses a touch in a self capacitance-based touch sensing scheme according to embodiments of the disclosure;

[0018] FIG. **5** is a view illustrating a mesh-type touch electrode disposed on a touch panel TSP in a flexible touch display device according to embodiments of the disclosure;

[0019] FIG. **6** is a view illustrating a correspondence between subpixels and a mesh-type touch electrode disposed on a touch panel TSP in a flexible touch display device according to embodiments of the disclosure;

[0020] FIGS. **7** and **8** are views illustrating a subpixel circuit of a display panel according to embodiments of the disclosure;

[0021] FIG. **9** is a view illustrating a position of a touch electrode in a display panel according to embodiments of the disclosure;

[0022] FIG. **10** is a plan view illustrating an emission area and a non-emission area included in an active area of an organic light emitting display panel according to embodiments of the disclosure;

[0023] FIGS. **11**A and **11**B are cross-sectional views taken along line A-B of FIG. **10**, illustrating a portion of an active area;

[0024] FIG. **12** is an enlarged view illustrating area X of FIGS. **11**A and **11**B;

[0025] FIG. **13** is an enlarged view illustrating area Y of FIGS. **11**A and **11**B;

[0026] FIG. **14** is a view illustrating a portion of an active area and a non-active area extending from the active area;

[0027] FIG. **15** is a cross-sectional view illustrating a display device according to another embodiment of the disclosure; and

[0028] FIG. **16** is a cross-sectional view illustrating a display device according to another embodiment of the disclosure.

DETAILED DESCRIPTION

[0029] In the following description of examples or embodiments of the disclosure, reference will be made to the accompanying drawings in which it is shown by way of illustration specific examples or embodiments that can be implemented, and in which the same reference numerals and signs can be used to designate the same or like components even when they are shown in different accompanying drawings from one another. Further, in the following description of examples or embodiments of the disclosure, detailed descriptions of well-known functions and components incorporated herein will be omitted when it is determined that the description may make the subject matter in some embodiments of the disclosure rather unclear. The terms such as "including", "having", "containing", "constituting" "make up of", and "formed of" used herein are generally intended to allow other components to be added unless the terms are used with the term "only". As used herein, singular forms are intended to include plural forms unless the context clearly indicates otherwise.

[0030] Terms, such as "first", "second", "A", "B", "(A)", or "(B)" may be used herein to describe elements of the disclosure. Each of these terms is not used to define essence, order, sequence, or number of elements etc., but is used merely to distinguish the corresponding element from other elements.

[0031] When it is mentioned that a first element "is connected or coupled to", "contacts or overlaps" etc. a second element, it should be interpreted that, not only can the first element "be directly connected or coupled to" or "directly contact or overlap" the second element, but a third element can also be "interposed" between the first and second elements, or the first and second elements can "be connected or coupled to", "contact or overlap", etc. each other via a fourth element. Here, the second element may be included in at least one of two or more elements that "are connected or coupled to", "contact or overlap", etc. each other.

[0032] When time relative terms, such as "after," "subsequent to," "next," "before," and the like, are used to describe processes or operations of elements or configurations, or flows or steps in operating, processing, manufacturing methods, these terms may be used to describe non- consecutive or non-sequential processes or operations unless the term "directly" or "immediately" is used together.

[0033] In addition, when any dimensions, relative sizes etc. are mentioned, it should be considered that numerical values for an elements or features, or corresponding information (e.g., level, range, etc.) include a tolerance or error range that may be caused by various factors (e.g., process factors, internal or external impact, noise, etc.) even when a relevant description is not specified. Further, the term "may" fully encompasses all the meanings of the term "can".

[0034] Hereinafter, embodiments of the disclosure are described in detail with reference to the accompanying drawings.

[0035] FIG. **1** is a view illustrating a system configuration of a touch display device according to embodiments of the disclosure.

[0036] Referring to FIG. **1**, a touch display device according to embodiments of the disclosure may provide an image display function to display images and a touch sensing function to sense the user's touch.

[0037] The touch display device according to embodiments of the disclosure may include a display panel DISP on which data lines and gate lines are disposed to display images and a display driving circuit to drive the display panel DISP.

[0038] The display driving circuit may include, e.g., a data driving circuit DDC to drive the data lines, a gate driving circuit GDC to drive the gate lines, and a display controller D-CTR to control the data driving circuit DDC and the gate driving circuit GDC.

[0039] The touch display device according to embodiments of the disclosure may include a touch panel TSP on which a plurality of touch electrodes **320**, as touch sensors, are disposed, and a touch sensing circuit TSC to perform driving and sensing processing of the touch panel TSP.

[0040] The touch sensing circuit TSC supplies a driving signal to the touch panel TSP to drive the touch panel TSP, detects a sensing signal from the touch panel TSP, and senses the presence or absence of a touch and/or the position (e.g., coordinates) of a touch based on the sensing signal.

[0041] The touch sensing circuit TSC may include, e.g., a touch driving circuit TDC to supply driving signals and receive sensing signals and a touch controller T-CTR to calculate the presence or absence of a touch and/or the position (e.g., coordinates) of a touch.

[0042] The touch sensing circuit TSC may be implemented as one or two or more components (e.g., integrated circuits) and may be implemented separately from the display driving circuit.

[0043] The whole or part of the touch sensing circuit TSC may be integrated with the display driving circuit or one or more of the internal circuits of the display driving circuit. For example, the touch driving circuit TDC of the touch sensing circuit TSC, along with the data driving circuit DDC of the display driving circuit, may be implemented as an integrated circuit.

[0044] The touch display device according to embodiments of the disclosure may sense a touch based on the capacitance created at the touch electrodes TE (touch sensors).

[0045] The touch display device according to embodiments of the disclosure may sense a touch in a mutual capacitance-based touch sensing scheme or self capacitance-based touch sensing scheme, as the capacitance-based touch sensing scheme.

[0046] FIGS. **2** to **4** are views illustrating three examples of the touch panel TSP in the touch display device according to embodiments of the disclosure. FIGS. **2** and **3** illustrate an example touch panel TSP when the touch display device according to embodiments of the disclosure senses a touch in a mutual capacitance-based touch sensing scheme, and FIG. **4** illustrates an example touch panel TSP when the

touch display device according to embodiments of the disclosure senses a touch in a self capacitance-based touch sensing scheme.

[0047] Referring to FIG. **2**, in the mutual capacitance-based touch sensing scheme, the plurality of touch electrodes disposed on the touch panel TSP may be divided into driving touch electrodes (also referred to as driving electrodes, transmission electrodes, or driving lines) to which driving signals are applied and sensing touch electrodes (also referred to as sensing electrodes, reception electrodes, or sensing lines) to receive sensing signals and to, along with the driving touch electrodes, create capacitance.

[0048] Among the driving touch electrodes of the touch electrodes, driving touch electrodes disposed along the same row (or the same column) may be electrically connected with each other in an integration scheme (or a bridge pattern-based connection scheme) to form a single driving touch electrode line DEL.

[0049] Referring to FIG. **2**, among the sensing touch electrodes of the touch electrodes, sensing touch electrodes disposed along the same column (or the same row) may be electrically connected with each other in a bridge pattern (or by an integration scheme) to form a single sensing touch electrode line SEL.

[0050] In the mutual capacitance-based touch sensing scheme, the touch sensing circuit TSC applies driving signals to one or more driving touch electrode lines DEL, receives sensing signals from one or more sensing touch electrode lines SEL, and detects, e.g., the presence or absence of a touch and/or the coordinates of a touch based on a variation in capacitance (mutual capacitance) between the driving touch electrode line DEL and the sensing touch electrode line SEL depending on the presence or absence of a pointer, e.g., a finger or pen, based on the received sensing signal.

[0051] Referring to FIG. **2**, a plurality of driving touch electrode lines DEL and a plurality of sensing touch electrode lines SEL each are electrically connected with the touch driving circuit TDC through one or more touch lines **230** to transfer driving signals and sensing signals.

[0052] Specifically, to transfer driving signals, the plurality of driving touch electrode lines DEL each may be electrically connected with the touch driving circuit TDC through one or more driving touch lines TLd. To transfer sensing signals, the plurality of sensing touch electrode lines SEL each may be electrically connected with the touch driving circuit TDC through one or more sensing touch lines TLs.

[0053] The touch display device **100** in the mutual capacitance-based touch sensing scheme may be represented as shown in FIG. **3**.

[0054] Referring to FIG. **3**, a plurality of touch electrodes **320** are disposed on the touch panel TSP, and touch lines **220** and **230** to electrically connect the touch electrodes **320** with the touch driving circuit TDC may be disposed on the touch panel TSP.

[0055] Touch pads contacted by the touch driving circuit TDC to electrically connect the touch lines **220** and **230** with the touch driving circuit TDC may be present on the touch panel TSP.

[0056] The touch electrodes **320** and the touch lines **220** and **230** may be present on the same layer or on different layers.

[0057] Two or more touch electrodes forming one driving touch electrode line are denoted driving touch electrodes Driving TE. Two or more touch electrodes **320** forming one sensing touch electrode line are denoted sensing touch electrodes Sensing TE.

[0058] At least one touch line **220** may be connected per driving touch electrode line, and at least one touch line **230** may be connected per sensing touch electrode line.

[0059] At least one touch line **220** connected per driving touch electrode line is denoted a driving touch line Driving TL. At least one touch line **230** connected per sensing touch electrode line is denoted a sensing touch line Sensing TL.

[0060] One touch pad may be connected per touch line **220** or **230**.

[0061] Referring to FIG. **3**, each of the plurality of touch electrodes **320** may be shaped as a diamond in its contour and, according to cases, each touch electrode **320** have a rectangular (including a square) shape or other various shapes.

[0062] A bridge component for connecting two touch electrodes **320** may include one or two or more bridge patterns **396**.

[0063] For example, when the bridge patterns **396** include two bridge patterns **396***a* and **396***b*, the bridge patterns **396** may include a first bridge pattern **396***a* and a second bridge pattern **396***b*.

[0064] The first and second bridge patterns **396***a* and **396***b* may have a bent shape, but embodiments of the disclosure are not limited thereto. For example, the first and second bridge patterns **396***a* and **396***b* may be shaped as a bar, but this is merely an example and the bridge patterns may be formed in other various shapes.

[0065] The bent first bridge pattern **396***a* may have a first end electrically connected with one touch electrode and a second end electrically connected with another touch electrode.

[0066] According to an embodiment, the touch panel TSP may be present inside a display panel with an active area A/A and a non-active area N/A (embedded type).

[0067] When the touch panel TSP is of the embedded type, the touch panel TSP and the display panel may be formed in one panel manufacturing process.

[0068] When the touch panel TSP is of the embedded type, the touch panel TSP may be regarded as an assembly of multiple touch electrodes **320**. Here, the plate on which the multiple touch electrodes **320** are placed may be a dedicated substrate or a layer (e.g., an encapsulation layer) preexisting in the display panel.

[0069] Referring to FIG. **4**, in the self capacitance-based touch sensing scheme, each touch electrode **320** disposed on the touch panel TSP plays a role both as a driving touch electrode (to be applied with driving signal) and as a sensing touch electrode (to receive sensing signal).

[0070] In other words, a driving signal is applied to each touch electrode **320**, and a sensing signal is received through the driving signal-applied touch electrode **320**. Thus, the self capacitance-based touch sensing scheme does not differentiate between driving electrodes and sensing electrodes.

[0071] In the self capacitance-based touch sensing scheme, the touch sensing circuit TSC applies driving signals to one or more touch electrodes **320**, receives sensing signals from the driving signal-applied touch electrode **320**, and detects, e.g., the presence or absence of a touch and/or the coordinates of a touch based on a variation in capaci-

tance between the touch electrode **320** and a point, e.g., a finger or pen, based on the received sensing signal.

[0072] Referring to FIG. **4**, each of the plurality of touch electrodes **320** is electrically connected with the touch driving circuit TDC through one or more touch lines **230** to transfer driving signals and sensing signals.

[0073] As such, the touch display device according to embodiments of the disclosure may sense a touch in the mutual capacitance-based touch sensing scheme or self capacitance-based touch sensing scheme.

[0074] In the touch display device according to embodiments of the disclosure, the touch panel TSP may be of the embedded type in which the touch panel TSP is simultaneously manufactured when the display panel DISP is manufactured and is present inside the display panel DISP. In other words, the display panel DISP according to embodiments of the disclosure may embedded with the touch panel TSP.

[0075] Further, according to embodiments of the disclosure, the touch electrodes **320** and the touch lines **230** are electrodes and signal wires present inside the display panel DISP.

[0076] The display panel DISP of the touch display device according to embodiments of the disclosure may be of an organic light emitting diode (OLED) panel type.

[0077] FIG. **5** is a view illustrating a mesh-type touch electrode disposed on a touch panel TSP in a flexible touch display device according to embodiments of the disclosure.

[0078] Referring to FIG. **5**, in a flexible touch display device according to embodiments of the disclosure, each of a plurality of touch electrodes **320** disposed on a touch panel TSP may be of a mesh type.

[0079] The mesh-type touch electrode **320** may be formed of an electrode metal EM patterned in a mesh type.

[0080] Thus, a plurality of open areas OA may be present in the area of the mesh-type touch electrode **320**.

[0081] FIG. **6** is a view illustrating a correspondence between subpixels and a mesh-type touch electrode disposed on a touch panel TSP in a flexible touch display device according to embodiments of the disclosure.

[0082] Referring to FIG. **6**, each of a plurality of open areas OA present in the area of a touch electrode **320** formed of an electrode metal EM patterned in a mesh type may correspond to the light emitting area of one or more subpixels.

[0083] For example, each of the plurality of open areas OA present in the area of one touch electrode **320** may correspond to the light emitting area of one or more of a red subpixel, a green subpixel, and a blue subpixel.

[0084] As another example, each of the plurality of open areas OA present in the area of one touch electrode **320** may correspond to the light emitting area of one or more of a red subpixel, a green subpixel, a blue subpixel, and a white subpixel.

[0085] As described above, since the light emitting area of one or more subpixels is present in each of the open areas OA of each touch electrode **320** at plan view, the aperture ratio and light emitting efficiency of the display panel DISP may further be increased, with touch sensing enabled.

[0086] As described above, the contour of one touch electrode **320** may be substantially shaped as a diamond or rectangle (or square), and the open area OA which corresponds to a hole in one touch electrode **320** may also be shaped as a diamond or rectangle (or square).

[0087] However, given the shape of the subpixel, layout of the subpixels, and touch sensitivity, various changes or modifications in design may be made to the shape of the touch electrode **320** and the open area OA.

[0088] Described below is a subpixel structure (subpixel circuit) in a display panel for displaying images using organic light emitting diodes (OLEDs).

[0089] FIGS. **7** and **8** are views illustrating a subpixel circuit of a display panel according to embodiments of the disclosure.

[0090] Referring to FIGS. **7** and **8**, each subpixel SP may basically include an organic light emitting diode (OLED) and a driving transistor DRT to drive the organic light emitting diode (OLED).

[0091] Referring to FIG. **7**, each subpixel SP may further include a first transistor T**1** to transfer data voltage VDATA to a first node N**1**, which corresponds to a gate node of the driving transistor DRT, and a storage capacitor C**1** to maintain the data voltage VDATA corresponding to an image signal voltage or a voltage corresponding to the data voltage VDATA for the time of one frame.

[0092] The organic light emitting diode (OLED) may include a first electrode **750** (an anode electrode or cathode electrode), a light emitting layer **760**, and a second electrode **770** (a cathode electrode or anode electrode).

[0093] As an example, a base voltage EVSS may be applied to the second electrode **770** of the organic light emitting diode (OLED).

[0094] The driving transistor DRT supplies a driving current to the organic light emitting diode (OLED), thereby driving the organic light emitting diode (OLED).

[0095] The driving transistor DRT includes the first node N**1**, second node N**2**, and third node N**3**.

[0096] The first node N**1** of the driving transistor DRT is a node corresponding to the gate node and may be electrically connected with the source node or drain node of the first transistor T**1**.

[0097] The second node N**2** of the driving transistor DRT may be electrically connected with the first electrode **750** of the organic light emitting diode (OLED) and may be the source node or drain node.

[0098] The third node N**3** of the driving transistor DRT may be a node to which driving voltage EVDD is applied, be electrically connected with a driving voltage line DVL for supplying the driving voltage EVDD, and be the drain node or source node.

[0099] The driving transistor DRT and the first transistor T**1** may be implemented as n-type transistors or p-type transistors.

[0100] The first transistor T**1** may be electrically connected with the data line DL and the first node N**1** of the driving transistor DRT and may receive, and be controlled by, a scan signal SCAN through the gate line and the gate node.

[0101] The first transistor T**1** may be turned on by the scan signal SCAN, transferring the data voltage VDATA supplied from the data line DL to the first node N**1** of the driving transistor DRT.

[0102] The storage capacitor C**1** may be electrically connected between the first node N**1** and second node N**2** of the driving transistor DRT.

[0103] The storage capacitor C**1** is an external capacitor intentionally designed to be outside the driving transistor DRT, but not a parasite capacitor (e.g., Cgs or Cgd) which

is an internal capacitor present between the first node N1 and the second node N2 of the driving transistor DRT.

[0104] Referring to FIG. **8**, according to embodiments of the disclosure, each subpixel disposed on the display panel may further include a second transistor T2 in addition to the organic light emitting diode (OLED), driving transistor DRT, first transistor T1, and storage capacitor C1.

[0105] The second transistor T2 may be electrically connected between the second node N2 of the driving transistor DRT and a reference voltage line RVL for supplying a reference voltage VREF and may receive, and be controlled by, a sensing signal SENSE, which is a kind of scan signal, through the gate node.

[0106] Adding the above-described second transistor T2 allows for effective control of the voltage state of the second node N2 of the driving transistor DRT in the subpixel SP.

[0107] The second transistor T2 is turned on by the sensing signal SENSE, applying the reference voltage VREF supplied through the reference voltage line RVL to the second node N2 of the driving transistor DRT.

[0108] The subpixel structure of FIG. **8** is advantageous in accurately initializing the voltage of the second node N2 of the driving transistor DRT and sensing the properties (threshold voltage or mobility) of the driving transistor DRT and the properties (e.g., threshold voltage) of the organic light emitting diode (OLED).

[0109] Meanwhile, the scan signal SCAN and the sensing signal SENSE may be separate gate signals. In this case, the scan signal SCAN and the sensing signal SENSE may be applied to the gate node of the first transistor T1 and the gate node of the second transistor T2, respectively, through different gate lines.

[0110] In some cases, the scan signal SCAN and the sensing signal SENSE may be the same gate signal. In this case, the scan signal SCAN and the sensing signal SENSE may be jointly applied to the gate node of the first transistor T1 and the gate node of the second transistor T2 through the same gate line.

[0111] FIG. **9** is a view illustrating a position of a touch electrode in a display panel according to embodiments of the disclosure.

[0112] Referring to FIG. **9**, in the display panel according to embodiments of the disclosure, the touch electrode **320** may be disposed on an encapsulation layer **990** positioned on the organic light emitting diode (OLED).

[0113] The encapsulation layer **990**, as a layer to protect the organic material contained in the light emitting layer **760**, from moisture or air, may be positioned on the second electrode **770** of the organic light emitting diode (OLED) which may be the cathode electrode.

[0114] The encapsulation layer **990** may be formed of a metal or an inorganic material or may be formed in a stacked structure of one or more organic insulation layers and one or more inorganic insulation layers.

[0115] As such, the touch structure in which the touch electrode **320** is formed on the encapsulation layer **990** is denoted a touch on encapsulation layer (TOE).

[0116] Meanwhile, a color filter layer may be further present between the encapsulation layer **990** and the touch electrode **320** or on the touch electrode **320**.

[0117] Thus, a potential difference is created between the second electrode **770** and the touch electrode **320**, forming a capacitance Cp.

[0118] The capacitance necessary for touch sensing is a capacitance between the touch electrodes **320** or a capacitance between the touch electrode **320** and the touching object (e.g., a finger or pen).

[0119] The brightness of the display panel DISP of the disclosure may be varied depending on the amount of the light emitted from the organic light emitting diodes (OLEDs) disposed in the active area A/A and extracted to the outside. In other words, as the amount of the light emitted from the OLEDs and extracted increases, the brightness of the display panel DISP may increase. Described below is the structure of a thin film transistor array film having a structure with enhanced light extraction.

[0120] At least one subpixel of the plurality of subpixels disposed in the active area may include at least one concave portion in the insulation film.

[0121] The organic light emitting display panel is described below in greater detail with reference to various figures.

[0122] FIG. **10** is a plan view illustrating an emission area and a non-emission area included in an active area of an organic light emitting display panel according to embodiments of the disclosure. FIGS. **11**A and **11**B are cross-sectional views taken along line A-B of FIG. **10**, illustrating a portion of an active area. FIGS. **11**A and **11**B may illustrate only a partial configuration and partial area disposed in one subpixel SP.

[0123] Referring to FIG. **10**, a plurality of emission areas EA and a plurality of non-emission areas NEA are disposed in the active area A/A.

[0124] As shown in FIG. **10**, the emission areas EA of at least two or more subpixels SP may have different sizes but embodiments of the disclosure are not limited thereto.

[0125] Each subpixel SP disposed in the active area A/A may include a plurality of emission areas EA, and at least one emission area EA may include a plurality of emission areas EA1 and EA2.

[0126] Specifically, the emission area EA of one subpixel SP may include a first emission area EA1 and a second emission area EA2 surrounding the first emission area EA1.

[0127] A first non-emission area NEA1 may be disposed between the first emission area EA1 and the second emission area EA2.

[0128] In other words, the first emission area EA1 and the second emission area EA2 may be differentiated from each other by the first non-emission area NEA1.

[0129] The first non-emission area NEA1 may be smaller in size than the first emission area EA1 and the second emission area EA2.

[0130] When the display device is in an on state, the first non-emission area NEA1 may be in a black state, or the first non-emission area NEA1 may have a lower brightness than the first and second emission areas EA1 and EA2 due to the light incident from at least one of the first emission area EA1 and the second emission area EA2.

[0131] As shown in FIG. **10**, the first emission area EA1, second emission area EA2, and first non-emission area NEA1 each may be octagonal at plan view. However, embodiments of the disclosure are not limited thereto. For example, the first emission area EA1, second emission area EA2, and first non-emission area NEA1 each may be shaped as a circle, ellipse, or polygon, e.g., a triangle, square, or hexagon, or a combination thereof, in shape.

[0132] A pair of first and second emission areas EA**1** and EA**2** may be spaced apart from another pair of first and second emission areas EA**1** and EA**2**, and the second non-emission area NEA**2** may be disposed therebetween.

[0133] The second non-emission area NEA**2** may be an area corresponding in whole or part to a circuit area where circuitry for driving the first and second emission areas EA**1** and EA**2** are disposed.

[0134] When the display device is in an on state, the second non-emission area NEA**2** may be in a black state or may have a lower brightness than the first and second emission areas EA**1** and EA**2** due to the light incident from the second emission area EA**2**.

[0135] When the first non-emission area NEA**1** and the second non-emission area NEA**2** have a lower brightness than the first and second emission areas EA**1** and EA**2**, the brightness of the first non-emission area NEA**1** may be higher than the brightness of the second non-emission area NEA**2**, but embodiments of the disclosure are not limited thereto.

[0136] In the display device according to embodiments of the disclosure, a plurality of touch electrodes **320** (or touch wires) may be disposed in an area of the area where the second non-emission area NEA**2** is disposed.

[0137] Thus, although the plurality of touch electrodes **320** include an opaque conductive material, since they do not overlap the emission area EA, the size of the emission area EA does not reduce.

[0138] Further, the display device according to the disclosure may include at least one light reflecting member **1010** disposed on the same layer as the plurality of touch electrodes **320**.

[0139] The light reflecting member **1010** may be disposed to surround at least one second emission area EA**2**, allowing the light emitted from the organic light emitting diode (OLED) to be reflected and extracted to the outside of the display device.

[0140] Thus, the light reflecting member **1010** may have a shape corresponding to the second emission area EA**2** at plan view. For example, the light reflecting member **1010** may be octagonal at plan view as shown in FIG. **10**.

[0141] One light reflecting member **1010** may be disposed to surround one second emission area EA**2** and to be spaced apart from another light reflecting member **1010**.

[0142] The light reflecting member **1010** may be disposed in the second non-emission area NEA**2**. Thus, although the light reflecting member **1010** includes an opaque conductive material, since it does not overlap the emission area EA, a reduction in the size of the emission area EA may be prevented.

[0143] The light reflecting member **1010** may be disposed apart from the plurality of touch electrodes **320** as shown in FIG. **10**. In other words, the light reflecting member **1010** may be in a state of being electrically separated from the plurality of touch electrodes **320**. Thus, although a touch signal is applied to the plurality of touch electrodes **320**, no touch signal may be applied to the light reflecting member **1010**.

[0144] This is discussed below in detail with reference to FIGS. **11**A and **11**B.

[0145] Referring to FIGS. **11**A and **11**B, a transistor TR disposed on a substrate **1110** and an organic light emitting diode (OLED) electrically connected with the transistor TR are disposed in the active area A/A (the area taken along line A-B).

[0146] The transistor TR includes an active layer **1121**, a gate electrode **1123**, a source electrode **1124**, and a drain electrode **1125**.

[0147] The organic light emitting diode (OLED) includes a first electrode **750**, an organic layer **760** including a light emission layer, and a second electrode **770**. The first electrode **750** may be an anode electrode, and the second electrode **770** may be a cathode electrode, but embodiments of the disclosure are not limited thereto.

[0148] Specifically, a buffer layer **1111** is disposed on the substrate **1110**. The active layer **1121** of the transistor TR is disposed on the buffer layer **1111**. A gate insulation film **1122** is disposed on the active layer **1121**, and a gate electrode **1123** is disposed on the gate insulation film **1122**.

[0149] Although not shown in FIGS. **11**A and **11**B, the active layer **1121** may include a channel area, and the channel area of the active layer **1121** may overlap the gate insulation film **1122** and the gate electrode **1123**, according to embodiments of the disclosure. In other words, the gate insulation film **1122** and the gate electrode **1123** may be disposed on the channel area of the active layer **1121**.

[0150] An inter-layer insulation film **1112** is disposed on the gate electrode **1123**. The source electrode **1124** and the drain electrode **1125** are disposed on the inter-layer insulation film **1112**. The source electrode **1124** and the drain electrode **1125** may be spaced apart from each other on the inter-layer insulation film **1112**. The source electrode **1124** and the drain electrode **1125** each may contact the active layer **1121** through a hole formed in the inter-layer insulation film **1112**.

[0151] Although the transistor TR may be disposed on the substrate **1110** in the above-described structure, the transistor structure of the disclosure is not limited thereto.

[0152] For example, the gate electrode **1123** may be disposed on the substrate **1110**, the active layer **1121** may be disposed on the gate electrode **1123**, the source electrode **1124** may be disposed to overlap an end of the active layer **1121**, and the drain electrode **1125** may be disposed to overlap the opposite end of the active layer **1121**.

[0153] A protection film **1113** may be disposed while covering the transistor TR.

[0154] An insulation film **1140** may be disposed on the protection film **1113**.

[0155] The insulation film **1140** may be formed of an organic material, but embodiments of the disclosure are not limited thereto.

[0156] The insulation film **1140** may have at least one concave portion **1143** in one subpixel area. The insulation film **1140** may have a surrounding portion **1144** that surrounds the concave portion **1143** and is positioned around the concave portion **1143**. The concave portion **1143** may include a flat portion **1141** and an inclined portion **1142** surrounding the flat portion **1141**.

[0157] The surface of the flat portion **1141** of the concave portion **1143** may be parallel with the surface of the substrate **1110**, the inclined portion **1142** may surround the flat portion **1141**, and a predetermined angle may be formed between the surface of the inclined portion **1142** and the surface of the substrate **1110**. In other words, the surface of the inclined portion **1142** may be not parallel with the surface of the substrate **1110**.

[0158] The insulation film **1140** may have a contact hole spaced apart from the concave portion **1143**.

[0159] In at least one subpixel area, the first electrode **750** may be disposed on the concave portion **1143** and surrounding portion **1144** of the insulation film **1140**.

[0160] In the area overlapping the concave portion **1143**, the first electrode **750** includes a first area **1151** in which the top surface of the first electrode **750** is parallel with the surface of the substrate **1110** and a second area **1152** extending from the first area **1151**. In the second area **1152**, a predetermined angle is formed between the top surface of the first electrode **750** and the surface of the substrate **1110**. In other words, the surface of the second area **1152** may be not parallel with the surface of the substrate **1110**. The first electrode **750** includes a third area **1153** extending from the second area **1152** and, in the third area **1153**, the top surface of the first electrode **750** is parallel with the surface of the substrate **1110**. The third area **1153** may be an area overlapping the surrounding portion **1144** of the insulation film **1140**.

[0161] As described above, in at least one subpixel area, the insulation film **1140** may include at least one contact hole spaced apart from the concave portion **1143**, and the transistor TR may be electrically connected with the first electrode **750** of the organic light emitting diode (OLED) through the contact hole of the insulation film **1140**.

[0162] Specifically, the first electrode **750** may be electrically connected with the source electrode **1124** or drain electrode **1125** of the transistor TR.

[0163] A bank **1180** may be disposed on portions of the insulation film **1140** and the first electrode **750** as shown in FIGS. **11**A and **11**B.

[0164] The bank **1180** may include a first portion **1181** disposed on the first electrode **750** in an area corresponding to a portion of the concave portion **1143** of the insulation film **1140** and a second portion **1182** disposed on the insulation film **1140** and the first electrode **750** in an area corresponding to the surrounding portion **1144** of the insulation film **1140**.

[0165] The bank **1180** may be disposed to expose a portion of the top surface of the first electrode **750** in the area corresponding to the concave portion **1143**. In other words, at least one subpixel may have an area in which the first electrode **750** does not overlap the bank **1180**.

[0166] The organic layer **760** of the organic light emitting diode (OLED) with at least one emission layer may be disposed on the first electrode **750** not overlapping the bank **1180**. The organic layer **760** may be disposed on the first electrode **750** and the bank.

[0167] The second electrode **770** of the OLED may be disposed on the organic layer **760**.

[0168] The organic layer **760** of the organic light emitting diode (OLED) may be formed by deposition or coating featuring straightness. For example, the organic layer **760** may be formed by physical vapor deposition (PVD), e.g., evaporation.

[0169] Formed by the method, the organic layer **760** may have a first thickness in an area having a predetermined angle from the horizontal surface and a second thickness in an area parallel with the horizontal surface, wherein the first thickness is smaller than the second thickness.

[0170] For example, the thickness of the organic layer **760** disposed in the area corresponding to the inclined portion **1142** of the concave portion **1143** may be smaller than the thickness of the organic layer **760** disposed on the top surface of the first electrode **750** exposed by the bank **1180**. Further, the thickness of the organic layer **760** disposed in the area corresponding to the inclined portion **1142** of the concave portion **1143** may be smaller than the thickness of the organic layer **760** disposed on the surrounding portion **1144**.

[0171] Thus, when the organic light emitting diode (OLED) is driven, the area where the thickness of the organic layer **760** is relatively small, i.e., the area corresponding to the inclined portion **1142** of the concave portion **1143**, may have the highest current density, and a strong electric field may be applied to the area corresponding to the inclined portion **1142** of the concave portion **1143**.

[0172] The light emission characteristics of the organic light emitting diode (OLED) in the area corresponding to the inclined portion **1142** of the concave portion **1143** may be rendered to differ from the light emission characteristics of the organic light emitting diode (OLED) in the area corresponding to the flat portion **1141** of the concave portion **1143**, and the OLED may be deteriorated.

[0173] According to an embodiment of the disclosure, as the bank **1180** is disposed to cover the inclined portion **1142** of the concave portion **1143**, the OLED may not be formed in the area corresponding to the inclined portion **1142** of the concave portion **1143**, so the deterioration of the OLED and the phenomenon that the light emission characteristics are rendered to differ per area may be prevented.

[0174] However, the thickness conditions for the organic layer **760**, according to embodiments of the disclosure, are not limited thereto, but the organic layer **760** may rather have a corresponding thickness per position.

[0175] Meanwhile, the first electrode **750** may include a light reflective metal. Although FIGS. **11**A and **11**B illustrate a configuration in which the first electrode **750** is a single layer, embodiments of the disclosure are not limited thereto, but the first electrode **750** may be formed in a multi-layer structure. When the first electrode **750** has a multi-layer structure, at least one layer may include a light reflective metal.

[0176] For example, the first electrode **750** may include, but is not limited to, at least any one of aluminum, neodymium, nickel, titanium, tantalum, copper (Cu), silver (Ag), and an aluminum alloy.

[0177] The second electrode **770** may include a light-transmissive or semi-light transmissive, conductive material. For example, the second electrode **770** may include at least one kind of transparent, conductive oxide, such as indium tin oxide (ITO), indium zinc oxide (IZO), indium tin zinc oxide (ITZO), zinc oxide, or tin oxide, or may include a semi-light transmissive metal, such as magnesium, silver (Ag), or an alloy of magnesium and silver.

[0178] When the second electrode **770** includes a semi-light transmissive metal, the thickness of the second electrode **770** may be smaller than the thickness of the first electrode **750**.

[0179] As shown in FIGS. **11**A and **11**B, an auxiliary electrode **1130** (which may also be referred to as an auxiliary wire) contacting the second electrode **770** may further be disposed in the area corresponding to the second non-emission area NEA**2** in the active area A/A.

[0180] Specifically, the auxiliary electrode **1130** may be disposed on the inter-layer insulation film **1112**. The protection film **1113**, insulation film **1140**, and bank **1180** may

have a hole to expose the auxiliary electrode **1130**. The second electrode **770** may contact the auxiliary electrode **1130** through the hole formed in the protection film **1113**, insulation film **1140**, and bank **1180** to expose the auxiliary electrode **1130**.

[0181] When the organic light emitting display panel is a large-size display panel, a voltage drop may occur due to the resistance of the second electrode **770**, causing a difference in brightness between the periphery and center of the panel. However, in the organic light emitting display panel, according to the disclosure, the auxiliary electrode **1130** contacting the second electrode **770** may prevent a voltage drop. This may prevent a difference in brightness which may arise when the organic light emitting display panel is a large-size panel.

[0182] Although FIGS. **11**A and **11**B illustrate a configuration in which one auxiliary electrode **1130** is disposed in each subpixel SP, embodiments of the disclosure are not limited thereto. For example, one auxiliary electrode **1130** may be disposed per multiple subpixels SP.

[0183] The position of the auxiliary electrode **1130** shown in FIGS. **11**A and **11**B is merely an example and is not limited thereto.

[0184] Unless the organic light emitting display panel according to an embodiment of the disclosure is a large-size panel, the auxiliary electrode **1130** may be omitted.

[0185] As shown in FIGS. **11**A and **11**B, a storage capacitor Cst may be disposed in the active area A/A. The storage capacitor Cst may include a first storage capacitor electrode **1131** disposed on the same layer as the gate electrode **1123** and a second storage capacitor electrode **1132** disposed on the same layer as the source electrode **1124** and the drain electrode **1125**, but the structure of the storage capacitor Cst of the disclosure is not limited thereto.

[0186] At least one encapsulation layer **990** may be disposed on the second electrode **770** of the OLED.

[0187] For example, the encapsulation layer **990** may include a first encapsulation layer **1191** disposed on the second electrode **770**, a second encapsulation layer **1192** disposed on the first encapsulation layer **1191**, and a third encapsulation layer **1193** disposed on the second encapsulation layer **1192**.

[0188] As such, when the encapsulation layer **990** is formed in a multi-layered structure, at least one layer thereof may include an inorganic insulation material, and at least one other layer thereof may include an organic insulation material.

[0189] According to an embodiment of the disclosure, although the first encapsulation layer **1191** and the second encapsulation layer **1193** include an inorganic insulation material, and the second encapsulation layer **1192** includes an organic insulation material, embodiments of the disclosure are not limited thereto.

[0190] The encapsulation layer **990** may be disposed on the organic light emitting diode (OLED) to prevent infiltration of moisture or foreign bodies into the organic light emitting diode (OLED).

[0191] Although FIGS. **11**A and **11**B illustrate a configuration in which the encapsulation layer **990** is disposed in the active area A/A, embodiments of the disclosure are not limited thereto, but the encapsulation layer **990** may rather extend up to a portion of the non-active area N/A.

[0192] A first touch buffer layer **1194** may be disposed on the third encapsulation layer **1193**.

[0193] A plurality of bridge patterns **396** may be disposed on the first touch buffer layer **1194**, and a second touch buffer layer **1195** may be disposed on the bridge patterns **396**.

[0194] A plurality of touch electrodes **320** may be disposed on the second touch buffer layer **1195**. The plurality of touch electrodes **320** may contact the bridge pattern **396** through a hole formed in the second touch buffer layer **1195**.

[0195] The plurality of touch electrodes **320** may be transparent or opaque electrodes.

[0196] At least one light reflecting member **1010** may be disposed in the hole formed in the second touch buffer layer **1195**. As shown in FIG. **11**A, the light reflecting member **1010** may be disposed in the hole formed in the second touch buffer layer **1195** and on the first touch buffer layer **1194**.

[0197] The position of the light reflecting member **1010** according to the disclosure is not limited thereto. As shown in FIG. **11**B, at least one light reflecting member **1010** may be disposed on the same layer as the plurality of touch electrodes **320**.

[0198] Referring to FIG. **11**B, the pattern **1196** same as the bridge pattern **396** disposed under the touch electrode **320** may be disposed under the light reflecting member **1010**. The pattern **1196** disposed under the light reflecting member **1010** may be formed in the process in which the bridge pattern **396** disposed under the touch electrode **320** is formed, but embodiments of the disclosure are not limited thereto.

[0199] The light reflecting member **1010** may be disposed apart from the plurality of touch electrodes **320**. A planarization film **1199** may be disposed on the second touch buffer layer **1195**, the plurality of touch electrodes **320**, and the plurality of light reflecting members **1010**.

[0200] Although the light reflecting member **1010** includes a light reflecting metal, embodiments of the disclosure are not limited thereto.

[0201] One end of the light reflecting member **1010** may be disposed to overlap the bank **1180**.

[0202] The top area of the first electrode **750** of the organic light emitting diode (OLED), which is exposed by the bank **1180**, may be an area corresponding to the first emission area EA**1**.

[0203] As described above in connection with FIG. **10**, the light reflecting member **1010** may be disposed to surround the second emission area EA**2**.

[0204] In this case, the light reflecting member **1010** may be disposed to overlap the bank **1180**.

[0205] One end of the light reflecting member **1010** may be disposed to correspond to the boundary between the inclined portion **1142** and the flat portion **1144** of the insulation film **1140**. In other words, the light reflecting member **1010** may not overlap the first and second emission areas EA**1** and EA**2**.

[0206] The light reflecting member **1010** may allow the light emitted from the first emission area EA**1** to be extracted to the outside of the display device while being prevented from reaching other subpixel SP.

[0207] In the display device of the disclosure, which includes at least one concave portion **1143** in the insulation film **1140** and the light reflecting member **1010**, the path of the light emitted from the organic light emitting diode (OLED) is discussed below with reference to FIGS. **12** and **13**.

[0208] FIG. **12** is an enlarged view illustrating area X of FIGS. **11**A and **11**B. FIG. **13** is an enlarged view illustrating area Y of FIGS. **11**A and **11**B.

[0209] Substantially the same configurations and effects as those described above are not repeatedly described below.

[0210] Referring to FIG. **12**, at least one subpixel SP may include at least one emission area EA, and one emission area EA may include at least two emission areas EA**1** and EA**2**. One non-emission area NEA**1** may be disposed between the two emission areas EA**1** and EA**2**.

[0211] Specifically, a first emission area EA**1** may be an area corresponding to a portion of the concave portion **1143** of the insulation film **1140**.

[0212] In another aspect, the first emission area EA**1** may be an area that does not overlap the first portion **1181** of the bank **1180** in the flat portion **1141** of the concave portion **1143**.

[0213] The first emission area EA**1** may be an area in which part L**1** of the light emitted from the organic layer **760** is extracted via the organic layer **760** and the second electrode **770** to the outside of the display device.

[0214] The first emission area EA**1** may be an area in which part L**1** (which may be hereinafter referred to as first light) of the light emitted from the organic layer **760** arrives at the first electrode **750**, is reflected by the first electrode **750**, and is extracted via the organic layer **760** and the second electrode **770** to the outside of the display device.

[0215] Specifically, the first light L**1** emitted from the organic layer **760** sequentially passes through the second electrode **770** of the organic light emitting diode (OLED) and the encapsulation layer **990** and be extracted to the outside of the display device.

[0216] The first emission area EA**1** may be surrounded by the first non-emission area NEA**1**.

[0217] The first non-emission area NEA**1** may correspond to the area in which the bank **1180** overlaps the flat portion **1141** of the concave portion **1143**. Specifically, the first non-emission area NEA**1** may correspond to the area in which the first portion **1181** of the bank **1180** overlaps the flat portion **1141** of the concave portion **1143**.

[0218] The first non-emission area NEA**1** may be an area in which part L**4** of the light emitted from the organic layer **760** is directed to the first portion **1181** of the bank **1180** but the light L**4** may not be extracted to the outside. In other words, the first non-emission area NEA**1** may be an area in which the light emitted from the organic layer **760** in the direction parallel with the flat portion **1141** arrives at the first portion **1181** of the bank **1180** but is trapped in the subpixel rather than reflected to the outside.

[0219] When the display device is in an on state, the first non-emission area NEA**1** may be in a black state, or the first non-emission area NEA**1** may have a lower brightness than the first and second emission areas EA**1** and EA**2** due to the light incident from at least one of the first emission area EA**1** and the second emission area EA**2**. For example, the first non-emission area NEA**1** disposed between the first emission area EA**1** and second emission area EA**2** may be an area where the visible rays from the first emission area EA**1** and the visible rays from the second emission area EA**2** are mixed, but embodiments of the disclosure are not limited thereto.

[0220] The second emission area EA**2** may be disposed to surround the first non-emission area NEA**1**. The second emission area EA**2** may be an area in which the first electrode **750** overlaps the inclined portion **1142** of the concave portion **1143**. In another aspect, the second emission area EA**2** may be an area corresponding to the second area **1152** of the first electrode **750**.

[0221] Part L**2** (which may be hereinafter referred to as second light) of the light emitted from the organic layer **760** may be directed to the first portion **1181** of the bank **1180**.

[0222] In the organic light emitting display device according to embodiments of the disclosure, the refractive index of the bank **1180** may be smaller than the refractive index of the organic layer **760** of the organic light emitting diode (OLED).

[0223] For example, the refractive index of the bank **1180** may range from 1.4 to 1.55.

[0224] The refractive index of the organic layer **760** may range from 1.7 to 1.8.

[0225] Thus, part L**2** of the light emitted from the organic layer **760** may be total-reflected on the interfacial surface between the bank **1180** and the organic layer **760**, and is extracted through the second electrode **770**, encapsulation layer **990**, first and second touch buffer layers **1194** and **1195** to the outside.

[0226] Meanwhile, the refractive index of the encapsulation layer **990** and the first and second touch buffer layers **1194** and **1195** may be larger than the bank **1180**.

[0227] For example, the refractive index of the first and third encapsulation layers **1191** and **1193** may range from 1.8 to 1.9.

[0228] The refractive index of the second encapsulation layer **1192** may range from 1.6 to 1.7.

[0229] The refractive index of the first and second touch buffer layers **1194** and **1195** may range from 1.7 to 1.9.

[0230] The refractive index of the planarization film **1199** disposed on the second touch buffer layer **1195** may range from 1.5 to 1.6.

[0231] According to embodiments of the disclosure, the refractive index of the second encapsulation layer **1192** may be larger than the refractive index of the bank **1180** and the planarization film **1199**.

[0232] The refractive index of the bank **1180** may be smaller than the refractive index of the organic layer **760**, encapsulation layer **990**, and first and second touch buffer layers **1194** and **1195**.

[0233] Thus, the light total-reflected on the interfacial surface between the organic layer **760** and the bank **1180** may be prevented from being trapped in the display device.

[0234] Part of the second light L**2** transmitted through the second touch buffer layer **1195** may be extracted to the outside of the display device.

[0235] The rest of the second light L**2** may reach the light reflecting member **1010** disposed on the second touch buffer layer **1195** and be reflected by the light reflecting member **1010** and extracted to the outside of the display device.

[0236] In the display device according to embodiments of the disclosure, the light reflecting member **1010** may be disposed to surround the second emission area EA**2** to enhance the light extraction efficiency as described above.

[0237] In this case, the light reflecting member **1010** plays a role to prevent light leaks that occur as the light emitted from one subpixel SP goes over to other subpixel SP which emits a different color of light while enhancing the light extraction efficiency of the display device.

[0238] The rest L**3** (which may be hereinafter referred to as third light) of the light emitted from the organic layer **760** may be directed to the second area **1152** of the first electrode **750**.

[0239] The third light L**3** may be light that is not total-reflected on the interfacial surface between the bank **1180** and the organic layer **760** but enters the bank **1180**.

[0240] The third light L**3** travels through the first portion **1181** of the bank **1180** to the second area **1152** of the first electrode **750**. Upon reaching the first electrode **750**, the third light L**3** is reflected by the first electrode **750** and passes through the first portion **1181** of the bank **1180** and the organic layer **760** and reaches the second electrode **770**.

[0241] Thereafter, part of the third light L**3** may be extracted through the second electrode **770**, encapsulation layer **990**, and first and second touch buffer layers **1194** and **1195** to the outside of the display device.

[0242] The rest of the third light L**3** may reach the light reflecting member **1010** disposed on the second touch buffer layer **1195** and be reflected by the light reflecting member **1010** and extracted to the outside of the display device.

[0243] As described above, as at least one light reflecting member **1010** is disposed in the second non-emission area NEA**2**, light leakage of the organic light emitting display device may be suppressed, and the light extraction efficiency may be enhanced.

[0244] Part of the second and third light L**2** and L**3** is extracted in the first emission area EA**1**, and the rest may be extracted in the second emission area EA**2**, but embodiments of the disclosure are not limited thereto.

[0245] Part of the second and third light L**2** and L**3** may also be extracted in the first non-emission area NEA**1**. However, in such a case, the brightness of the first non-emission area NEA**1** may be lower than the brightness of the first and second emission areas EA**1** and EA**2**.

[0246] The second non-emission area NEA**2** may be disposed to surround the second emission area EA**2**. The second non-emission area NEA**2** may correspond to the area in which the second portion **1182** of the bank **1180** is disposed.

[0247] In the organic light emitting display panel according to embodiments of the disclosure, the inclined portion **1142** of the concave portion **1143** and the bank **1180** disposed on the inclined portion **1142** of the concave portion **1143** may have specific conditions to increase the amount of light extracted from the second emission area EA**2**.

[0248] Referring to FIG. **13**, the height H**1** of the inclined portion **1142** of the insulation film **1140** (or the depth of the concave portion) may be 0.7 μm or more. The height H**1** of the inclined portion **1142** means the minimum distance from the line extending in parallel with the surface of the substrate **1110**, from the surface of the flat portion **1141** of the concave portion **1143** to the surrounding portion **1144**

[0249] According to an embodiment of the disclosure, the height H**1** of the inclined portion **1142** of the insulation film **1140** is not limited to the above-described value. For example, the height Hl may be any height at which the components under the insulation film **1140** are not exposed by the concave portion **1143** of the insulation film **1140**.

[0250] The height H**1** of the inclined portion **1142** may be larger than the height H**2** of the bank **1180** disposed on the surrounding portion **1144**. In another aspect, the height H**1** of the inclined portion **1142** may be larger than the height H**2** of the second portion **1182** of the bank **1180**.

[0251] As such, as the height H**1** of the inclined portion **1142** increases, the amount of light reflected in the second area **1152** of the first electrode **750** increases, enhancing light extraction efficiency.

[0252] The angle a between the inclined portion **1142** of the concave portion **1143** and the horizontal surface may be not less than 27° and less than 80°.

[0253] When the angle a is less than 27°, the light emitted from the organic layer **760** may fail to arrive at the first electrode **750** disposed on the inclined portion **1142** but may rather be delivered to another adjacent subpixel, causing color mixing, or may be trapped in the display device without being extracted to the outside.

[0254] When the angle a exceeds 80°, an open circuit may occur in, e.g., the first electrode **750** disposed on the inclined portion **1142** of the insulation film **1140**.

[0255] In the area corresponding to the inclined portion **1142** of the concave portion **1143**, the distance W between the surface of the bank **1180** and the first electrode **750** may be not more than 3.2 μm, not more than 2.6 μm, or not more than 2.0 μm.

[0256] In another aspect, the distance W between the surface of the bank **1180** and the first electrode **750** in the second area **1152** of the first electrode **750** may be not more than 3.2 μm, not more than 2.6 μm, or not more than 2.0 μm.

[0257] As W decreases, the first emission area EA**1** may be expanded, and the optical path of the light reflected and extracted from the second area **1152** of the first electrode **750** may be shortened, enhancing light extraction efficiency. The lower limit of W, although not particularly limited, may be not less than 0.1 μm, not less than 0.3 μm, or not less than 0.5 μm.

[0258] By adjusting the range of W as above, the first emission area EA**1** may be enlarged, and light extraction efficiency may be enhanced in the organic light emitting display panel.

[0259] The color coordinates of the first emission area EA**1** may differ from, or correspond to, the color coordinates of the second emission area EA**2**.

[0260] For example, if the third light L**3** takes up a larger proportion of the light emitted from the second emission area EA**2**, the color coordinates of the first emission area EA**1** may differ from the color coordinates of the second emission area EA**2**.

[0261] The third light L**3** is light extracted to the outside of the display device through the bank **1180**. When the bank **1180** contains a colored organic material or inorganic material, the color coordinates of the second emission area EA**2** may shift to a longer wavelength than the color coordinates of the first emission area EA**1**.

[0262] As described above, the light reflecting member **1010** which may enhance light extraction efficiency while suppressing light leakage may be disposed on the same layer as the plurality of touch electrodes **320**.

[0263] Although the plurality of touch electrodes **320** may be connected with the touch line, the light reflecting member **1010** may have a structure of having been electrically separated from the touch line. Thus, the light reflecting member **1010** may enhance light extraction efficiency without affecting touch-related signals.

[0264] The layout structure of the plurality of touch electrodes **320**, light reflecting member **1010**, and touch line is discussed below with reference to FIG. **14**.

[0265] FIG. **14** is a view illustrating a portion of an active area and a non-active area extending from the active area.

[0266] Substantially the same configurations and effects as those described above are not repeatedly described below.

[0267] Referring to FIG. **14**, a plurality of touch electrodes **320**, at least one light reflecting member **1010**, and touch line **1450** may be disposed on the second touch buffer layer **1195**.

[0268] The touch electrodes **320** disposed along the same row (or the same column) may be electrically connected together via a bridge pattern **396**, forming one driving touch electrode line or one sensing touch electrode line.

[0269] Although FIG. **14** illustrates a configuration in which the touch electrode **320** and the touch line **1450** are positioned on the same layer, embodiments of the disclosure are not limited thereto. For example, the touch electrode **320** and the touch line **1450** may also be positioned on different layers.

[0270] The touch line **1450** may be electrically connected with an auxiliary line **1460** disposed on the same layer as the bridge pattern **396**. Specifically, as shown in FIG. **14**, the touch line **1450** may contact the auxiliary line **1460** disposed under the second touch buffer layer **1195** via a contact hole formed in the second touch buffer layer **1195**.

[0271] As the touch line **1450** is electrically connected with the auxiliary line **1460**, the resistance of the touch line **1450** may be reduced.

[0272] The touch line **1450** and the touch electrode **320** may be electrically connected with each other. The touch line **1450** is positioned on a dam **1420** and extends up to a pad portion positioned at the periphery of the dam **1420**. The touch line **1450** is electrically connected with the pad portion.

[0273] Specifically, the touch line **1450** may be electrically connected with a pad **1440** positioned in the pad portion PAD provided in the non-active area N/A. Although FIG. **14** illustrates that the touch line **1450** is electrically connected with the pad **1440** through a pad connection line **1430**, embodiments of the disclosure are not limited thereto. For example, the pad **1440** and the touch line **1450** may be directly connected together.

[0274] The pad **1440** connected with the touch line **1450** may be connected with the touch sensing circuit TSC. The touch sensing circuit TSC may supply a touch driving signal to at least one of the plurality of touch electrodes **320** and sense at least one of the presence or absence of a touch and the position of a touch in response to the touch driving signal.

[0275] The touch line **1450**, third encapsulation layer **1193**, and first and second touch buffer layers **1194** and **1195** may be disposed to overlap on the dam **1420**. However, this structure is merely an example. The touch line **1450** may overlap at least one component of the third encapsulation layer **1193** and the first and second touch buffer layers **1194** and **1195** on the dam **1420**.

[0276] Although FIG. **14** illustrates a structure in which one dam **1420** is provided, embodiments of the disclosure are not limited thereto. According to the disclosure, the number of dams **1420** may be properly varied depending on the size of the display device. In other words, there may be provided two or more dams **1420** and, when a plurality of dams **1420** are disposed on the substrate **1110**, at least two dams may have different heights.

[0277] Although FIGS. **11**A and **11**B, **12**, **13**, and **14** illustrate a structure in which the touch electrode **320** is connected via the bridge pattern **396**, embodiments of the disclosure are not limited thereto.

[0278] FIG. **15** is a cross-sectional view illustrating a display device according to another embodiment of the disclosure.

[0279] Substantially the same configurations and effects as those described above are not repeatedly described below.

[0280] Referring to FIG. **15**, a light reflecting member **1510** and a touch electrode **1520** may be disposed on the first touch buffer layer **1194**.

[0281] In other words, no bridge pattern may be present under the touch electrode **1520** and the light reflecting member **1510**.

[0282] The light reflecting member **1510** and the touch electrode **1520** may be disposed on the same layer and be formed of the same material. For example, the light reflecting member **1510** and the touch electrode **1520** may include a light reflective metal, but embodiments of the disclosure are not limited thereto.

[0283] In this case, since the light reflecting member **1510** and the touch electrode **1520** may be formed in the same process, the process for the display device of the disclosure may be simplified.

[0284] As an example, the light reflecting member **1510** and the touch electrode **1520** may include different materials. For example, the light reflecting member **1510** may include a light reflective metal, and the touch electrode **1520** may include a transparent conductive material.

[0285] According to the disclosure, the structure of the insulation film to bring the second electrode of the organic light emitting diode (OLED) in contact with the auxiliary electrode may be varied depending on the layout structure of the organic layer.

[0286] This is described below with reference to FIG. **16**.

[0287] FIG. **16** is a cross-sectional view illustrating a display device according to another embodiment of the disclosure.

[0288] Substantially the same configurations and effects as those described above are not repeatedly described below.

[0289] Referring to FIG. **16**, an organic layer **1660** of the organic light emitting diode (OLED) may be disposed to overlap the bank **1180** and a first electrode **750** in the active area A/A while exposing the top surface of an auxiliary electrode **1130**.

[0290] In this structure, to allow the second electrode **1670** and the auxiliary electrode **1130** to contact each other, the bank **1180** may have such a structure that prevents the material of the organic layer **1660** from being deposited on the auxiliary electrode **1130** in the process of forming the organic layer **1660**.

[0291] Specifically, as shown in FIG. **16**, the bank **1180** may be shaped to widen as it goes away from the substrate **1110** in the area surrounding the hole exposing the auxiliary electrode **1130**. In other words, as the bank **1180** goes farther away from the substrate **1110**, the hole of the bank **1180** exposing the auxiliary electrode **1130** may become narrower.

[0292] As the process for forming the organic layer **1660**, deposition or coating in which the source material features straightness may be adopted. For example, evaporation may be used. As the process of forming a second electrode **1670**,

deposition or coating in which the source material has irregular directivity may be used. For example, sputtering may be put to use.

[0293] Since the hole of the bank **1180** exposing the auxiliary electrode **1130** is narrow, the organic layer **1660** may not be disposed on the auxiliary electrode **1130** due to the processing properties of the organic layer **1660**. Since the source material of the second electrode **1670** may enter the hole due to the processing properties of the second electrode **1670** although the hole of the bank **1180** is narrow, the second electrode **1670** may be formed also on the auxiliary electrode **1130**.

[0294] According to embodiments of the disclosure, there may be provided a touch display device with light extraction efficiency enhanced through at least one concave portion formed in an insulation film and a light reflecting member provided in a non-display area.

[0295] According to embodiments of the disclosure, there may be provided a touch display device with a structure capable of preventing color mixing between adjacent pixels by applying a light reflecting member.

[0296] According to embodiments of the disclosure, there may be provided a touch display device with a structure simple to process by allowing the light reflecting member and the touch electrode to be formed in the same process.

[0297] The above description has been presented to enable any person skilled in the art to make and use the technical idea of the disclosure, and has been provided in the context of a particular application and its requirements. Various modifications, additions and substitutions to the described embodiments will be readily apparent to those skilled in the art, and the general principles defined herein may be applied to other embodiments and applications without departing from the spirit and scope of the disclosure. The above description and the accompanying drawings provide an example of the technical idea of the disclosure for illustrative purposes only. That is, the disclosed embodiments are intended to illustrate the scope of the technical idea of the disclosure. Thus, the scope of the disclosure is not limited to the embodiments shown, but is to be accorded the widest scope consistent with the claims. The scope of protection of the disclosure should be construed based on the following claims, and all technical ideas within the scope of equivalents thereof should be construed as being included within the scope of the disclosure.

Legend of Reference Numbers

[0298] **320**: touch electrode
[0299] **750**: first electrode
[0300] **760**: organic layer
[0301] **770**: second electrode
[0302] **990**: encapsulation layer
[0303] **1010**: light reflecting member

What is claimed is:

1. A display device, comprising:
a substrate;
a plurality of touch electrodes over the substrate, the plurality of touch electrodes including a first open area and a second open area; and
a plurality of sub-pixels on the substrate and each comprising an organic light emitting diode, the plurality of sub-pixels including a first sub-pixel in the first open area and a second sub-pixel in the second open area,
wherein each of the first sub-pixel and the second sub-pixel includes first and second emission areas and a first non-emission area, the first non-emission area being configured to be in a black state or to have a lower brightness than the first and second emission areas, and
wherein the first and second emission areas of the first sub-pixel have different sizes from the first and second emission areas of the second sub-pixel, respectively, in a plan view.

2. The display device of claim **1**, further comprising:
a second non-emission area in the first open area and surrounding the first and second emission areas of the first sub-pixel; and
a third non-emission area in the second open area and surrounding the first and second emission areas of the second sub-pixel,
wherein the second non-emission area has a different size from the third non-emission area.

3. The display device of claim **2**, further comprising a light reflecting member in at least one of the second non-emission area and the third non-emission area and surrounding the second emission area of at least one of the first sub-pixel and the second sub-pixel.

4. The display device of claim **3**, wherein the plurality of touch electrodes and the light reflecting member are disposed on a same layer and include a same material.

5. The display device of claim **3**, further comprising at least one transistor disposed on the substrate,
wherein a portion of the at least one transistor is overlapped with the light reflecting member.

6. The display device of claim **1**, wherein:
the substrate includes a display area and a non-display area,
the plurality of touch electrodes further includes a third open area at an edge of the display area, and
no emission area is disposed in the third open area.

7. The display device of claim **1**, wherein each of the first non-emission area and at least one of the first and second emission areas of at least one of the first sub-pixel and the second sub-pixel has a shape of an octagon, a circle, an ellipse, a polygon, a triangle, a square, or a hexagon in the plan view.

8. The display device of claim **1**, wherein in each of the first sub-pixel and the second sub-pixel, the first non-emission area is disposed between the first emission area and the second emission area, and the first non-emission area and the second emission area surround the first emission area and the first non-emission area, respectively.

9. The display device of claim **1**, further comprising an encapsulation layer on the organic light emitting diode,
wherein the plurality of touch electrodes are disposed on the encapsulation layer.

10. The display device of claim **9**, further comprising:
a plurality of buffer layers on the encapsulation layer; and
a planarization film on the plurality of buffer layers.

11. The display device of claim **9**, further comprising a color filer layer between the plurality of touch electrodes and the encapsulation layer, or on the plurality of touch electrodes.

12. The display device of claim **1**, wherein the plurality of touch electrodes form a mesh or lattice shape comprising the first and second open areas.

13. The display device of claim **1**, wherein at least one of the first sub-pixel and the second sub-pixel includes a second non-emission area,

wherein the organic light emitting diode comprises a first electrode, a light emitting layer, and a second electrode, and

wherein the first electrode is overlapped with the first and second emission areas and the first and second non-emission areas.

14. The display device of claim **13**, further comprising at least one transistor disposed on the substrate,

wherein the at least one transistor is overlapped with respective portions of the first emission area, the second emission area, the first non-emission area, and the second non-emission area.

15. The display device of claim **14**, further comprising an insulating layer disposed between the at least one transistor and the organic light emitting diode,

wherein the first electrode is connected to any one of source and drain electrodes of the at least one transistor through a hole of the insulating layer.

16. The display device of claim **1**, further comprising a touch line electrically connected with touch electrodes disposed along a same row or column among the plurality of touch electrodes,

wherein the touch electrodes disposed along the same row or column are connected to each other via a bridge pattern to form one driving touch electrode line or one sensing touch electrode line, and

wherein the touch line is disposed on a same layer as the touch electrodes disposed along the same row or column.

17. The display device of claim **16**, further comprising an auxiliary line electrically connected with the touch line,

wherein the auxiliary line is disposed on a same layer as the bridge pattern.

18. The display device of claim **17**, further comprising a buffer layer between the touch line and the auxiliary line,

wherein the touch line contacts the auxiliary line via a contact hole in the buffer layer.

19. The display device of claim **16**, further comprising a dam and a pad portion at a periphery of the dam in a non-active area of the substrate,

wherein the touch line is disposed on the dam and extends toward the pad portion.

20. The display device of claim **19**, wherein the touch line is electrically connected with a pad in the pad portion through a pad connection line or is directly connected to a pad in the pad portion.

* * * * *