US 20250282422A1

(19) United States
(12) Patent Application Publication
Park
(10) Pub. No.: US 2025/0282422 A1
(43) Pub. Date: Sep. 11, 2025

(54) **REAR LOWER MEMBER AND VEHICLE FRONT STRUCTURE INCLUDING THE SAME**

(71) Applicants: **Hyundai Motor Company**, Seoul (KR); **Kia Corporation**, Seoul (KR)

(72) Inventor: **Ji Woong Park**, Hwaseong-si (KR)

(21) Appl. No.: **19/219,536**

(22) Filed: **May 27, 2025**

**Related U.S. Application Data**

(62) Division of application No. 17/947,416, filed on Sep. 19, 2022, now Pat. No. 12,337,899.

(30) **Foreign Application Priority Data**

Apr. 21, 2022 (KR) ..... 10-2022-0049647

**Publication Classification**

(51) **Int. Cl.**

| | |
|---|---|
| ***B62D 21/15*** | (2006.01) |
| ***B62D 25/02*** | (2006.01) |
| ***B62D 25/04*** | (2006.01) |
| ***B62D 25/14*** | (2006.01) |
| ***B62D 25/16*** | (2006.01) |
| ***B62D 27/06*** | (2006.01) |

(52) **U.S. Cl.**

CPC ..... ***B62D 21/152*** (2013.01); ***B62D 25/025*** (2013.01); ***B62D 25/04*** (2013.01); ***B62D 25/145*** (2013.01); ***B62D 25/16*** (2013.01); ***B62D 27/065*** (2013.01)

(57) **ABSTRACT**

A rear lower member includes an upper extension portion extending in a diagonal direction and having an upper closed cross-section; and a lower extension portion positioned at a lower side of the upper extension portion and having a lower closed cross-section.

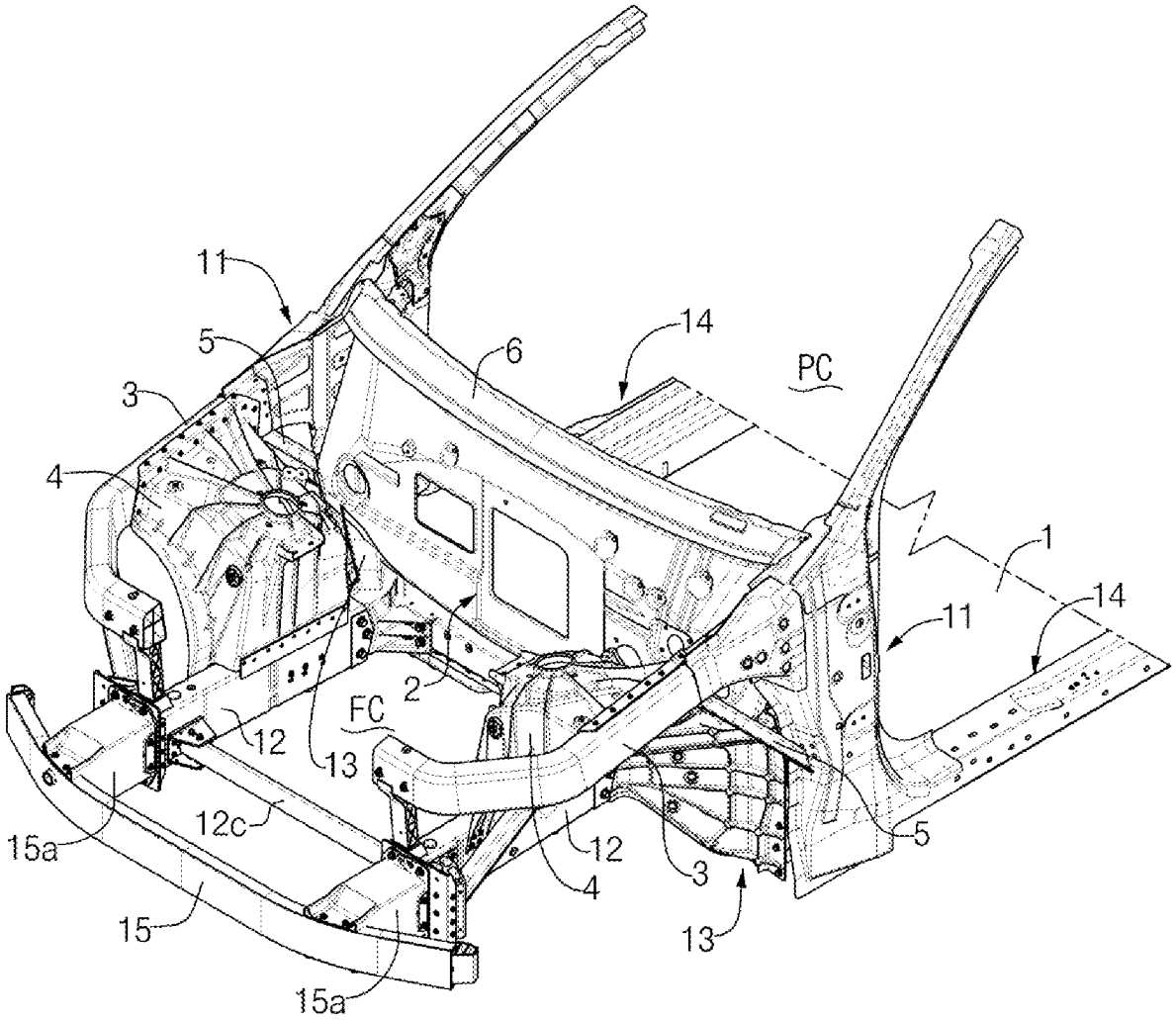

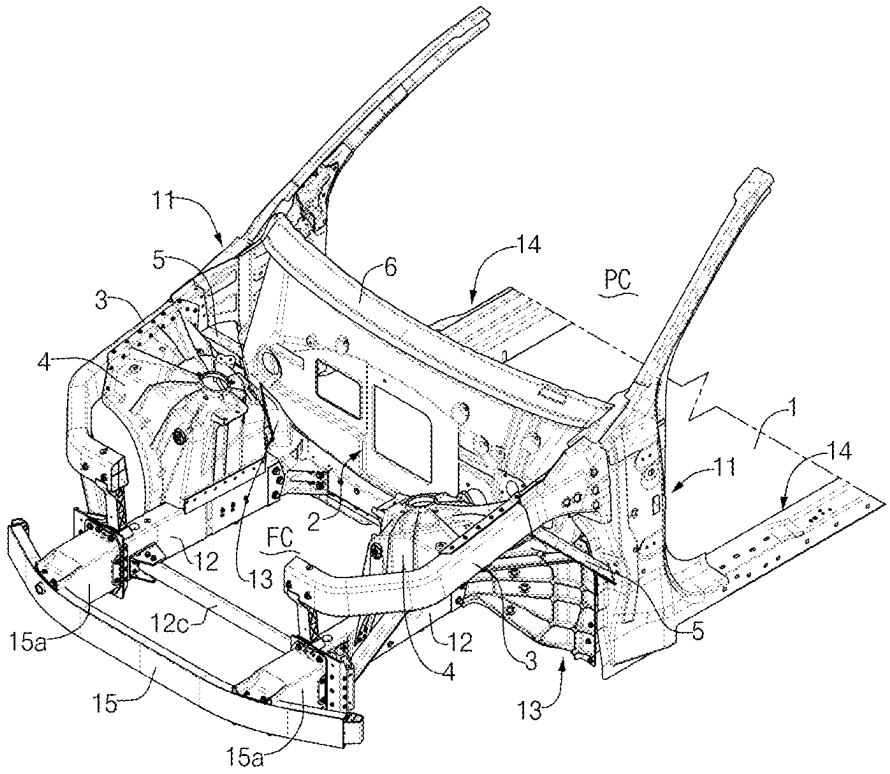


FIG.1

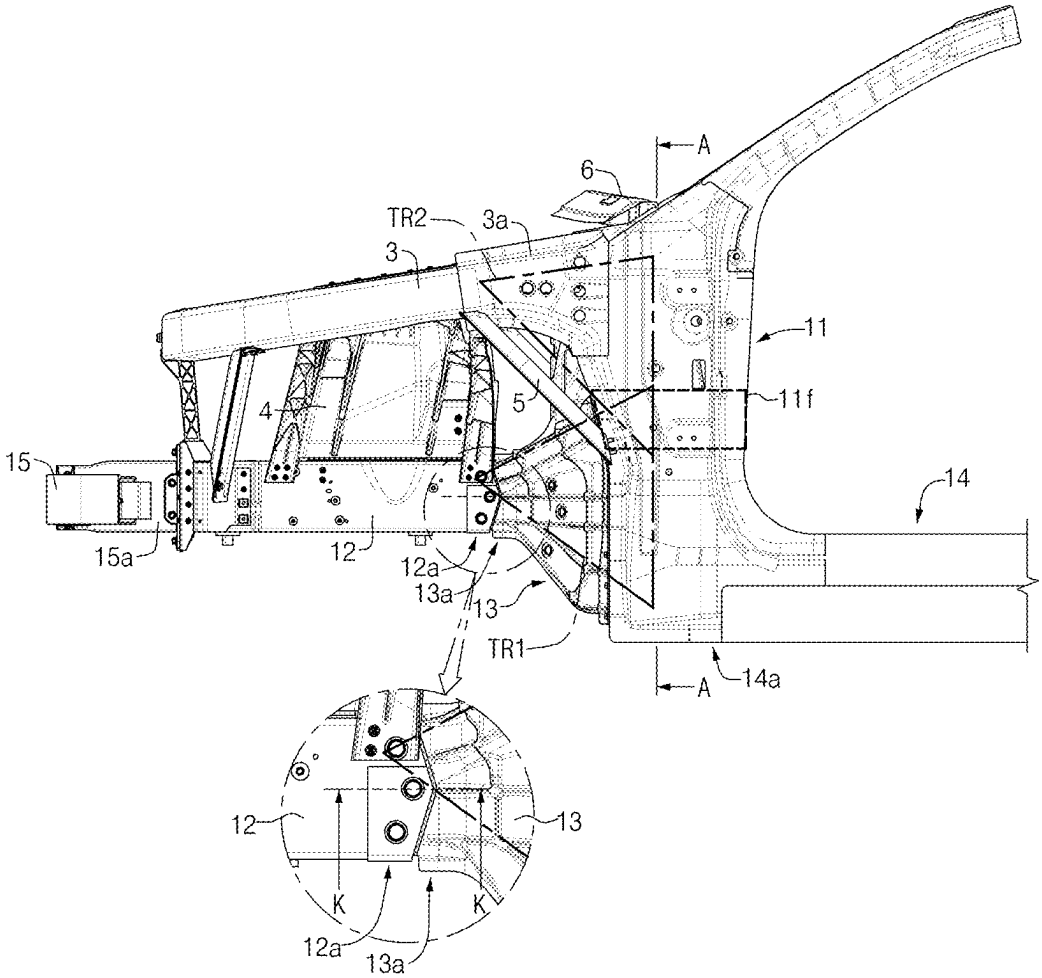
A
6
TR2
3a
3
11
11f
4
5
15
14
15a
12
12a
13a
13
TR1
14a
A
12
13
K
K
12a
13a

FIG.2

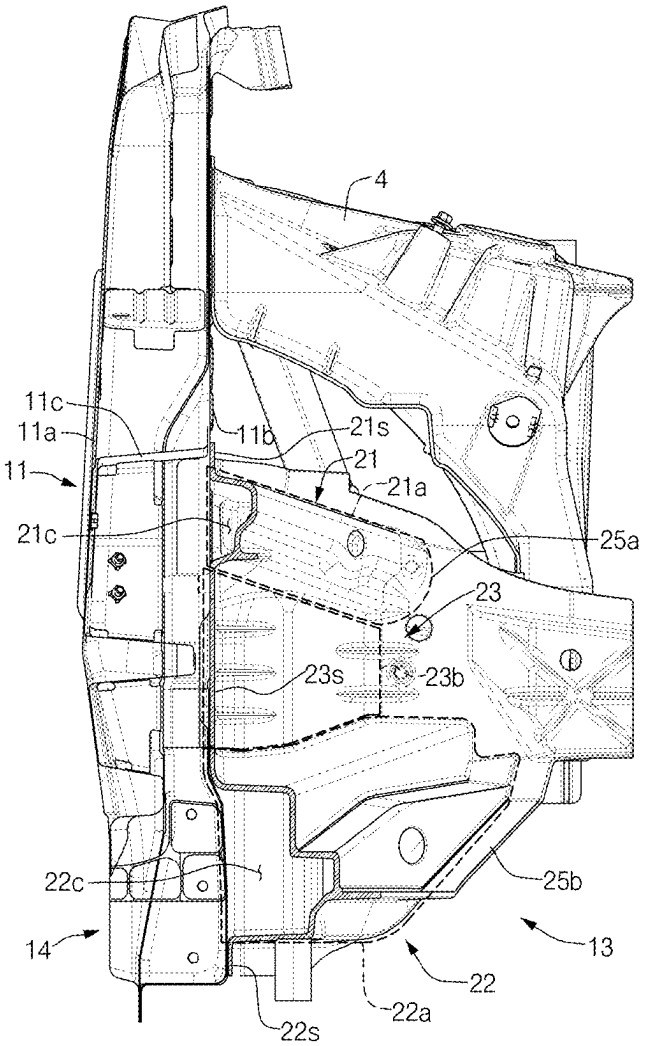
4
11c
11a
11
11b
21s
21
21a
21c
25a
23
23s
23b
22c
25b
14
13
22
22a
22s

FIG.3

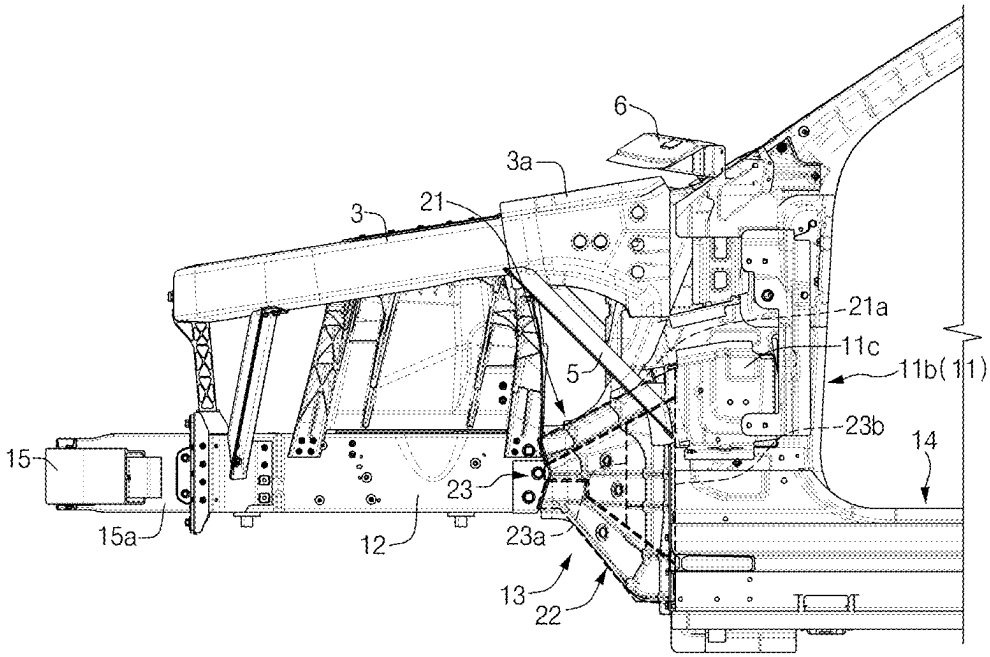


FIG.4

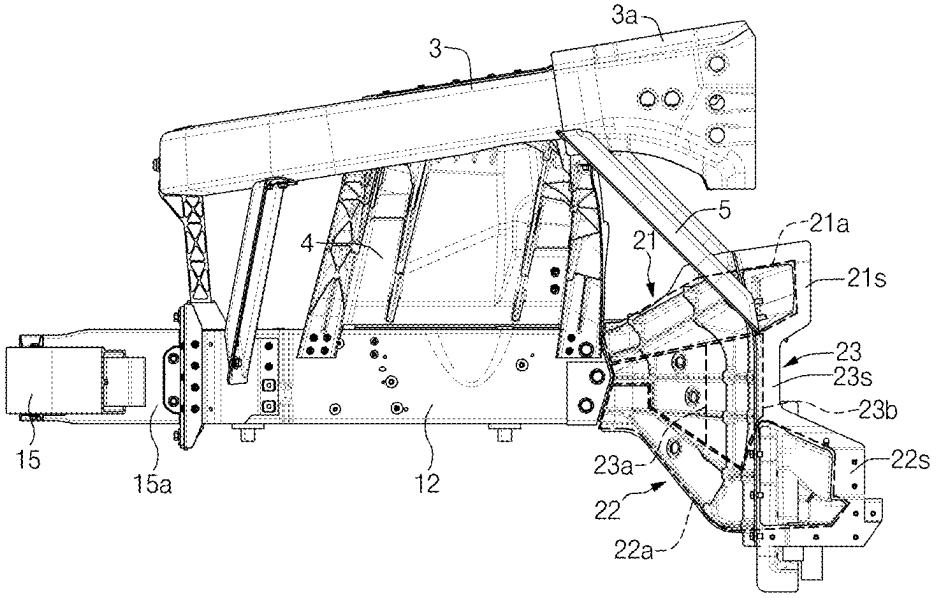


FIG.5

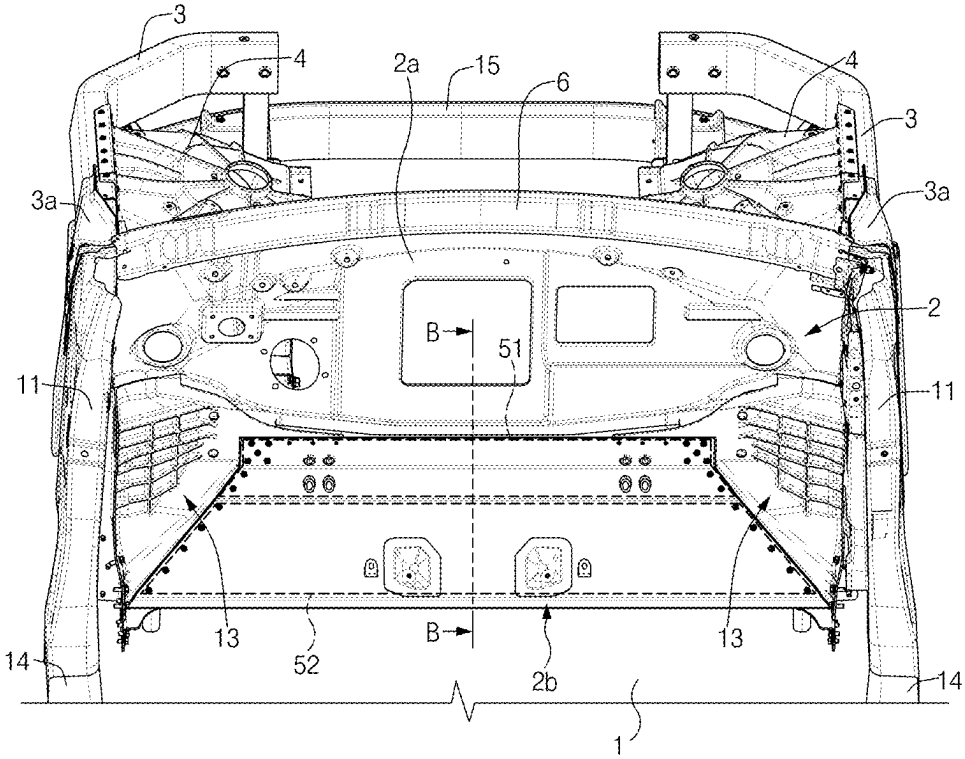


FIG.6

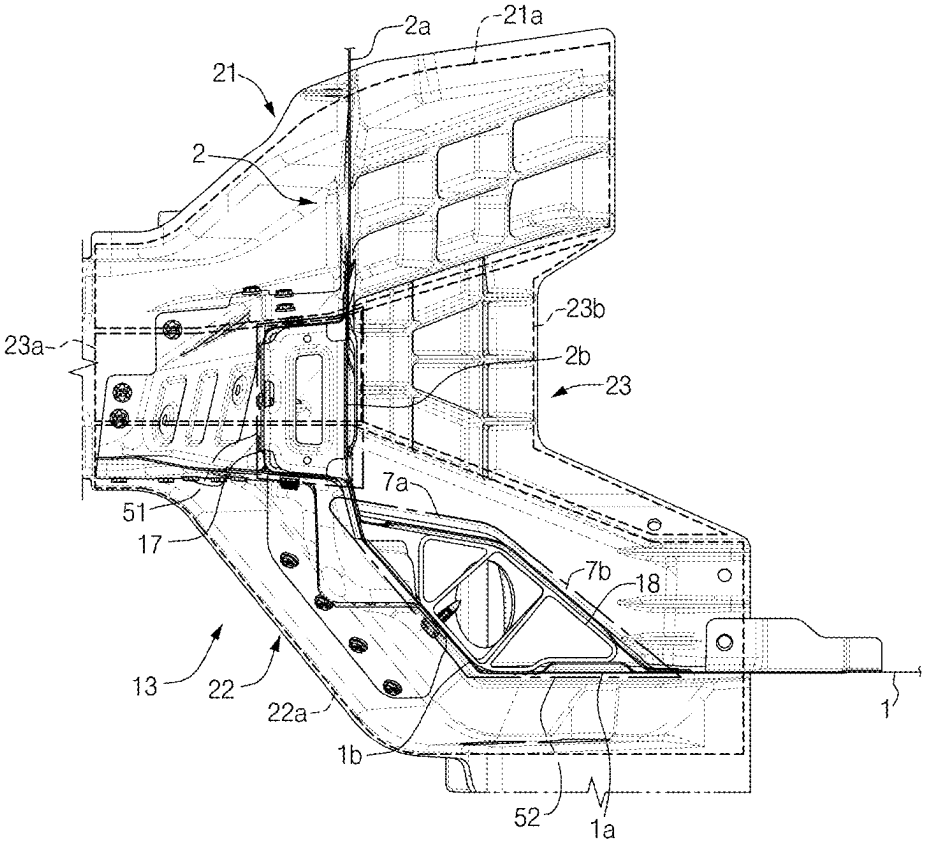


FIG. 7A

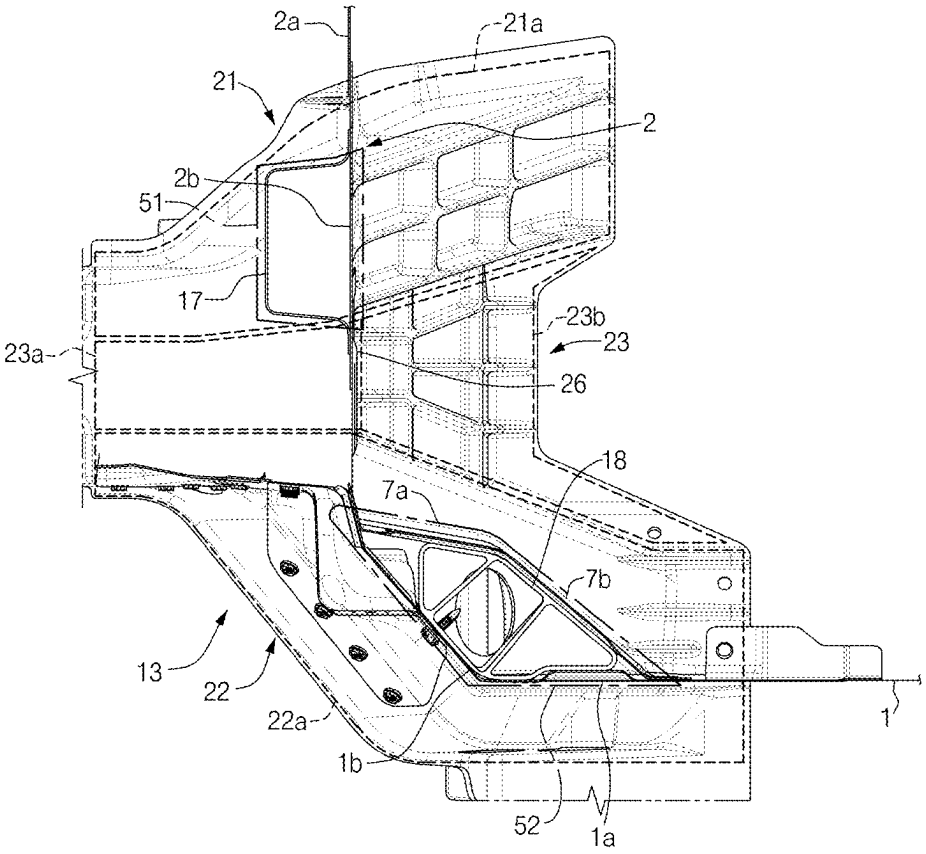


FIG. 7B

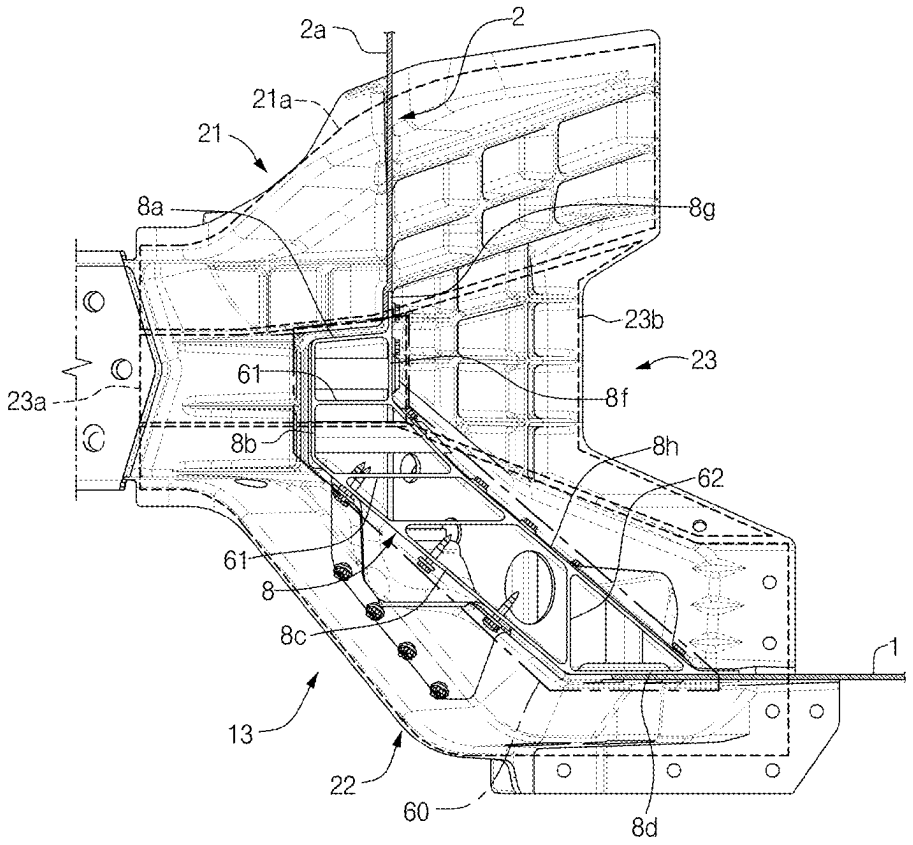


FIG. 8A

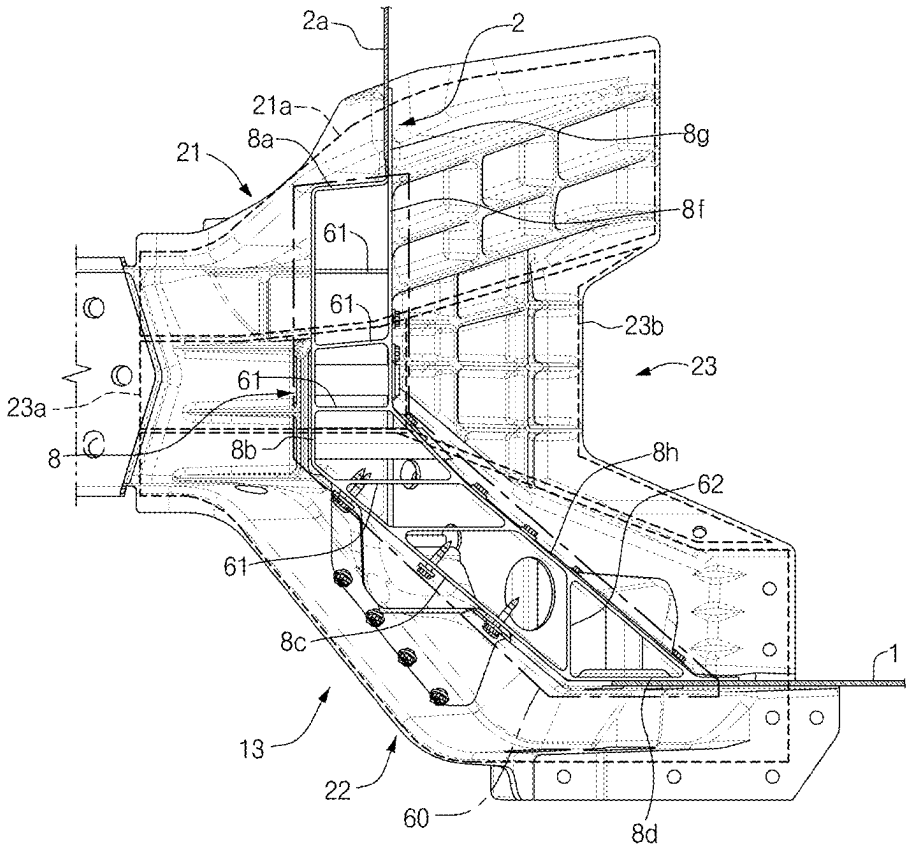


FIG. 8B

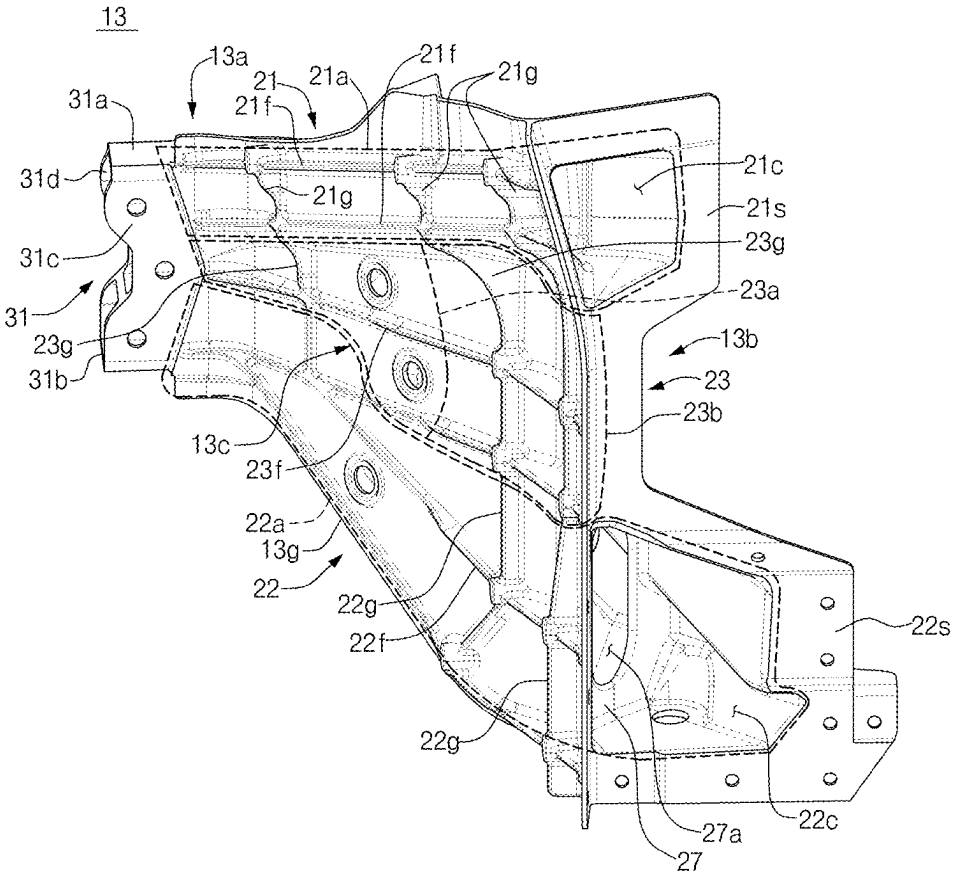
13
13a
21
21a
21f
21g
31a
21f
31d
21g
21c
21s
31c
23g
31
23a
23g
13b
31b
23
23b
13c
23f
22a
13g
22
22g
22s
22f
22g
22c
27a
27

FIG.9

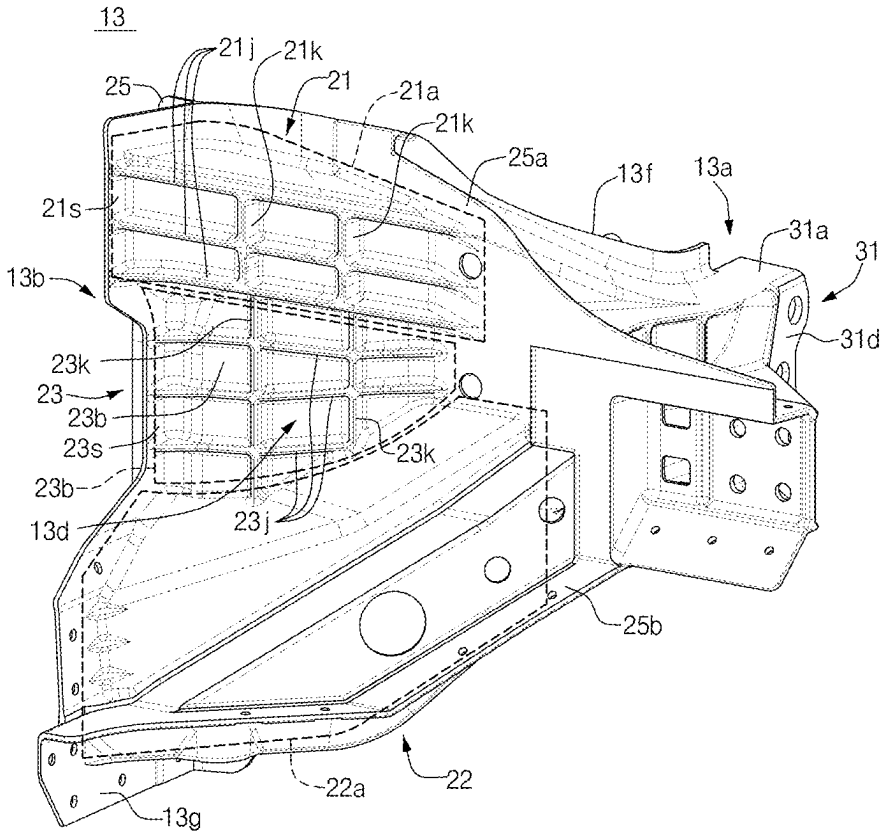
13
21j
21k
21
21a
21k
25
25a
13f
13a
21s
31a
31
13b
31d
23k
23
23b
23s
23k
23b
13d
23j
25b
22a
22
13g

FIG.10

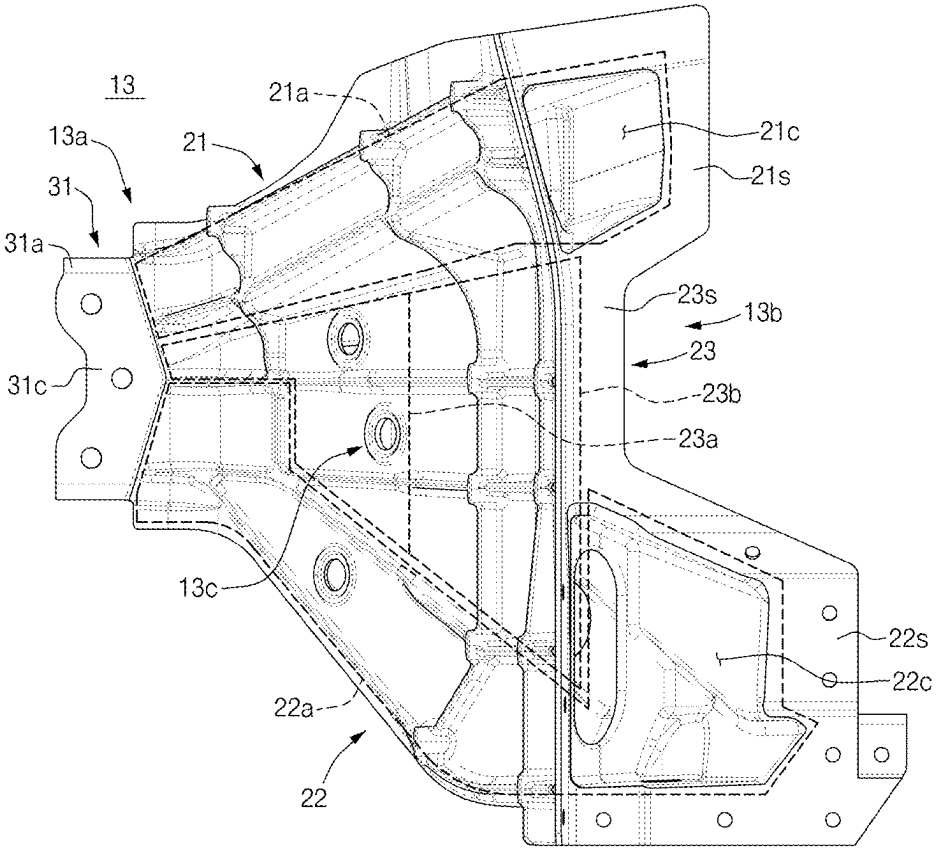
13
13a
31
31a
31c
21
21a
21c
21s
23s
13b
23
23b
23a
13c
22s
22c
22a
22

FIG.11

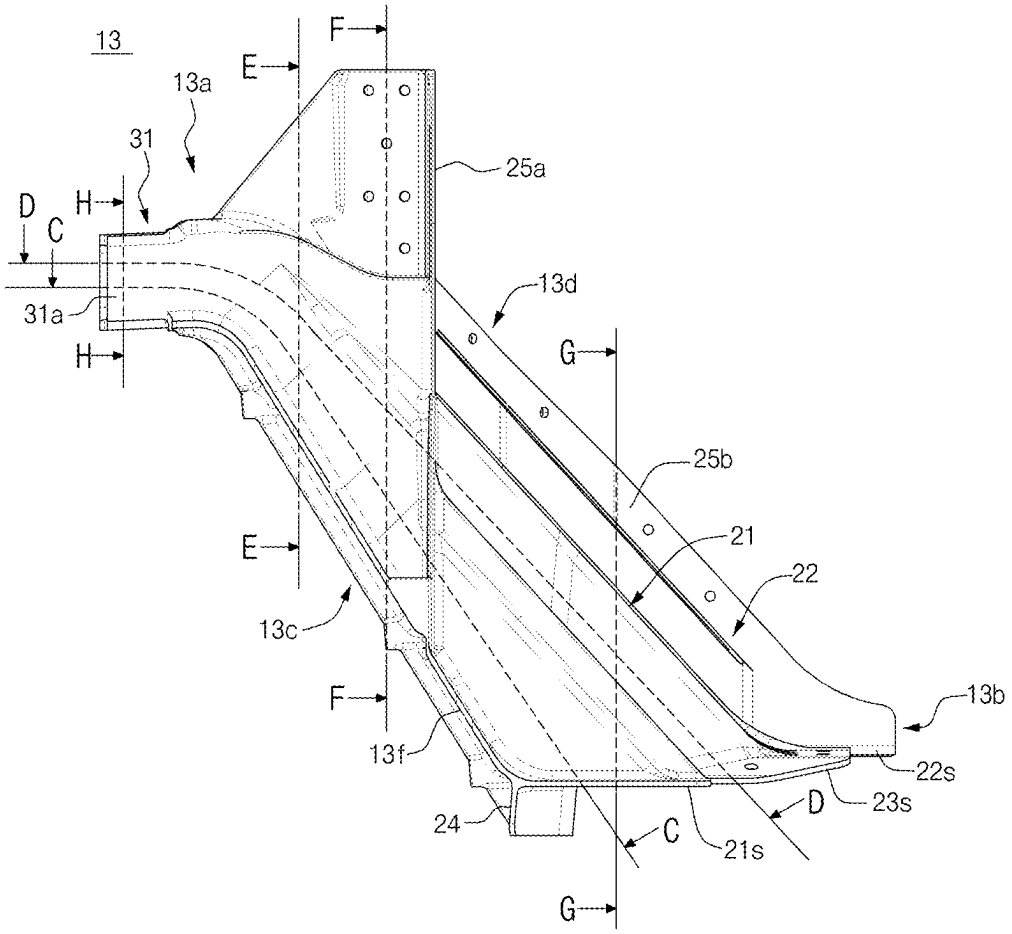
13
13a
31
31a
D
C
H
H
E
E
F
F
G
G
25a
13d
25b
21
22
13c
13f
13b
22s
23s
24
21s

FIG.12

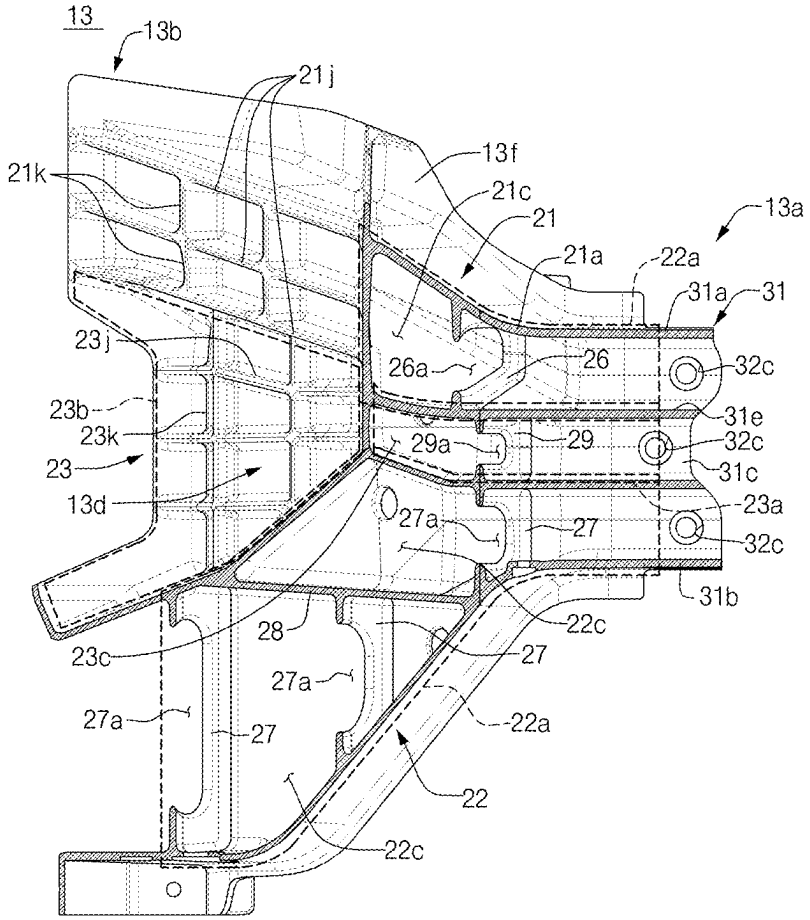
13
13b
21j
21k
13f
21c
21
13a
21a
22a
31a
31
23j
26a
26
32c
23b
31e
23k
29a
29
32c
23
31c
13d
23a
27a
27
32c
31b
28
22c
23c
27
27a
27a
27
22a
22
22c

FIG.13

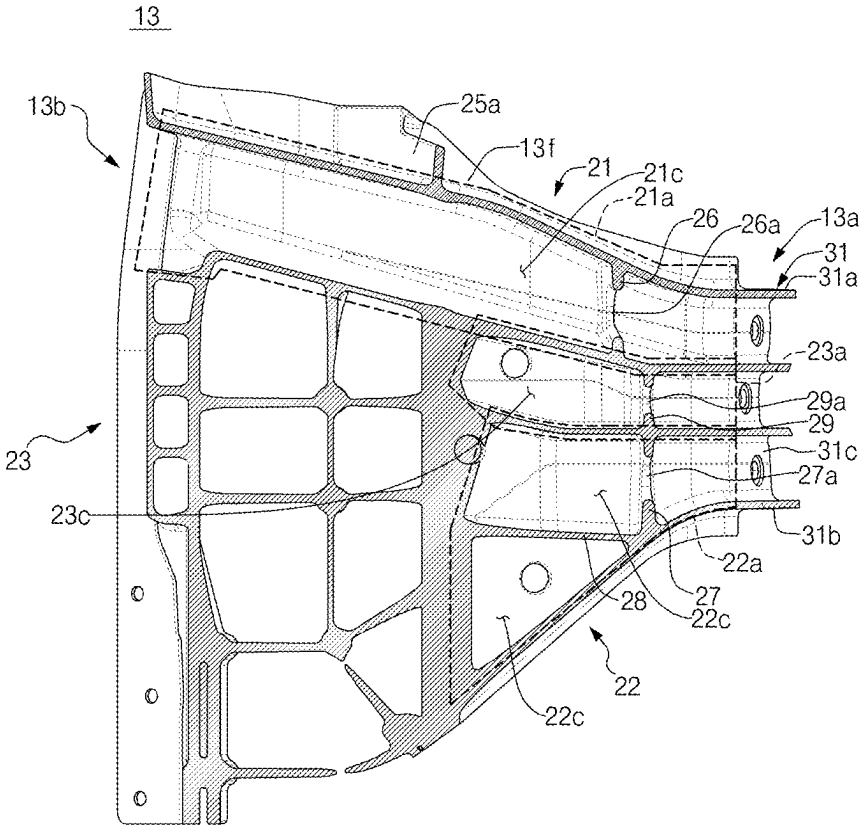
13
13b
25a
13f
21
21c
21a
26
26a
13a
31
31a
23a
29a
29
31c
27a
23
23c
31b
22a
27
28
22c
22
22c

FIG.14

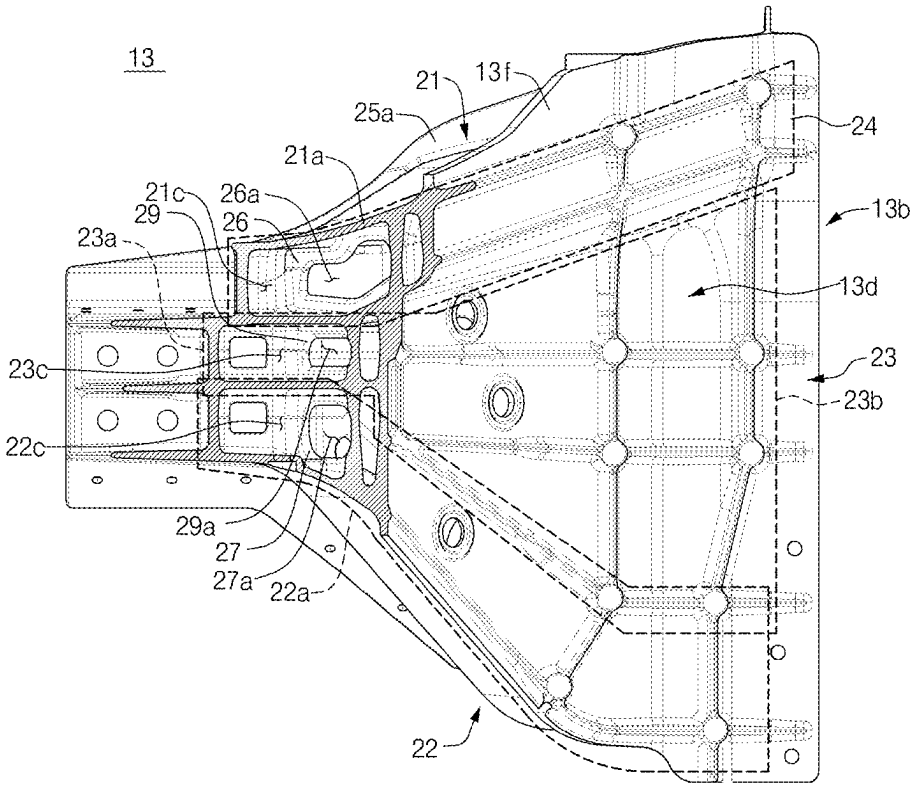
13
21
13f
25a
24
21a
21c
26a
29
26
13b
23a
13d
23c
23
23b
22c
29a
27
27a
22a
22

FIG.15

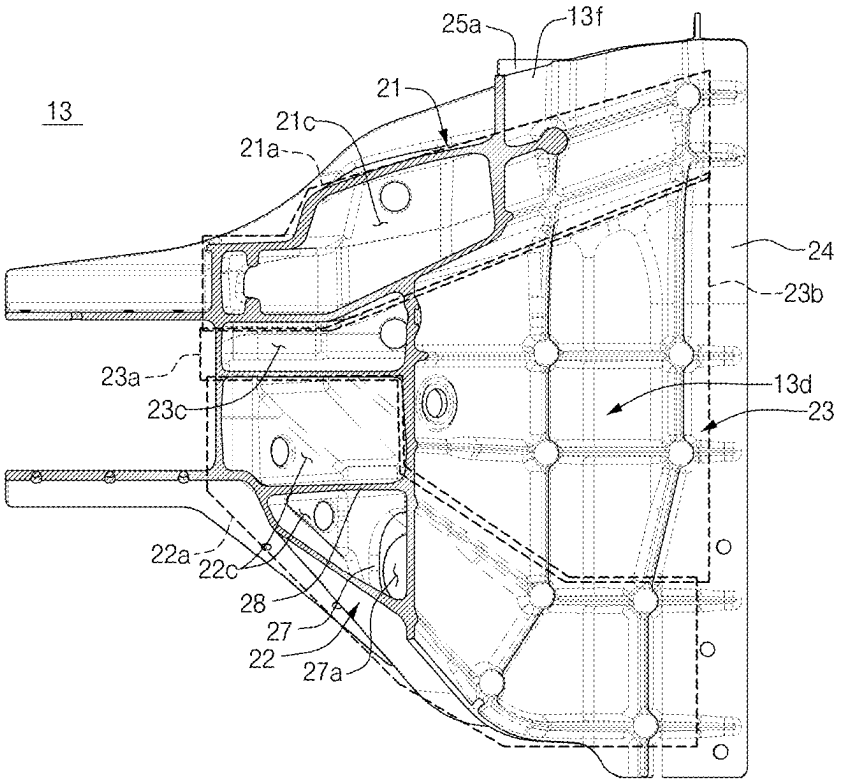


FIG.16

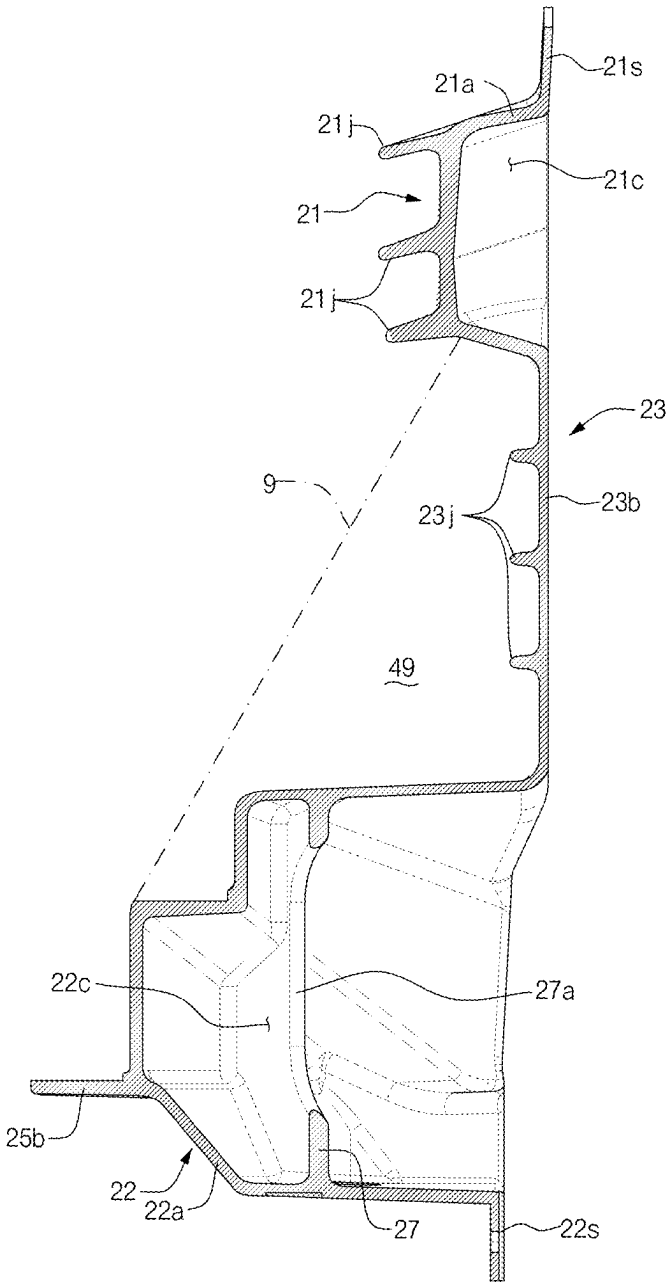


FIG.17

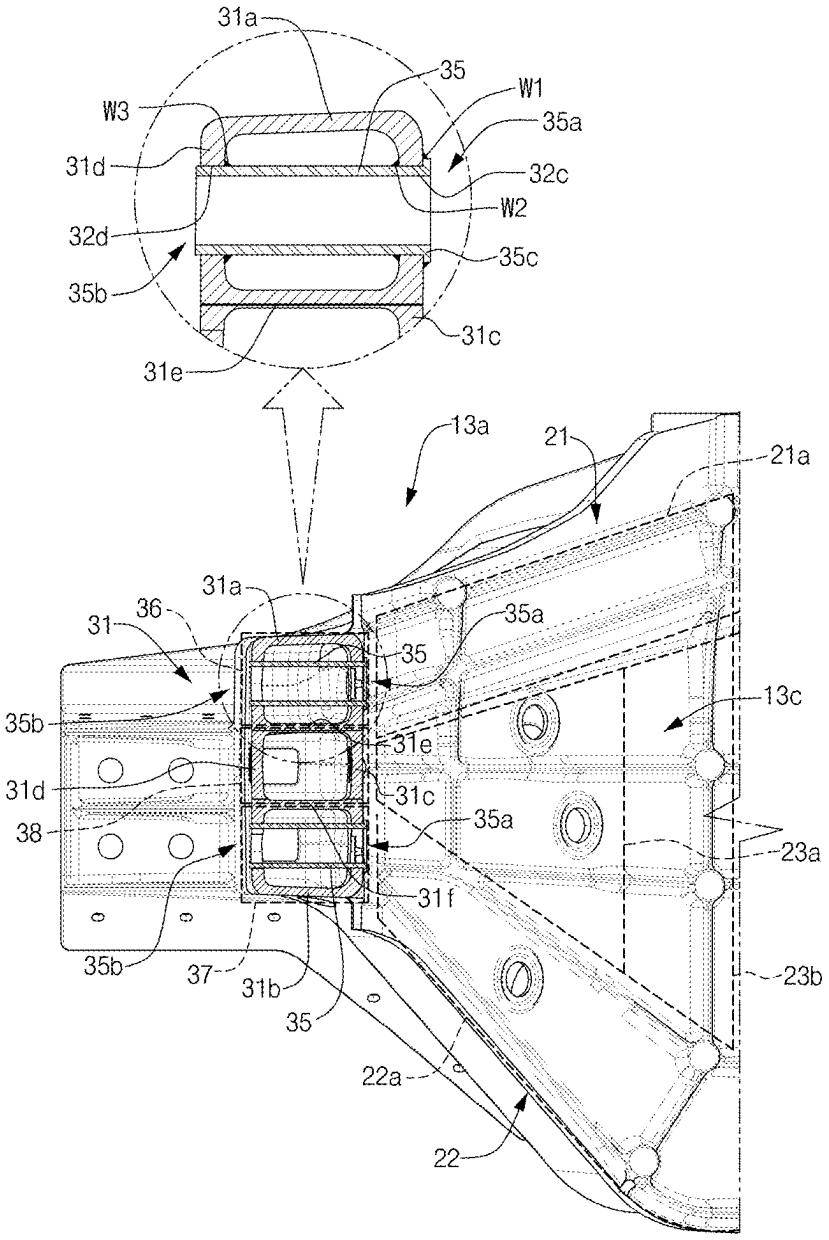
31a
35
W1
W3
35a
31d
32c
W2
32d
35c
35b
31c
31e
13a
21
21a
31a
36
31
35a
35
13c
35b
31e
31d
31c
38
35a
23a
31f
35b
37
31b
23b
35
22a
22

FIG.18

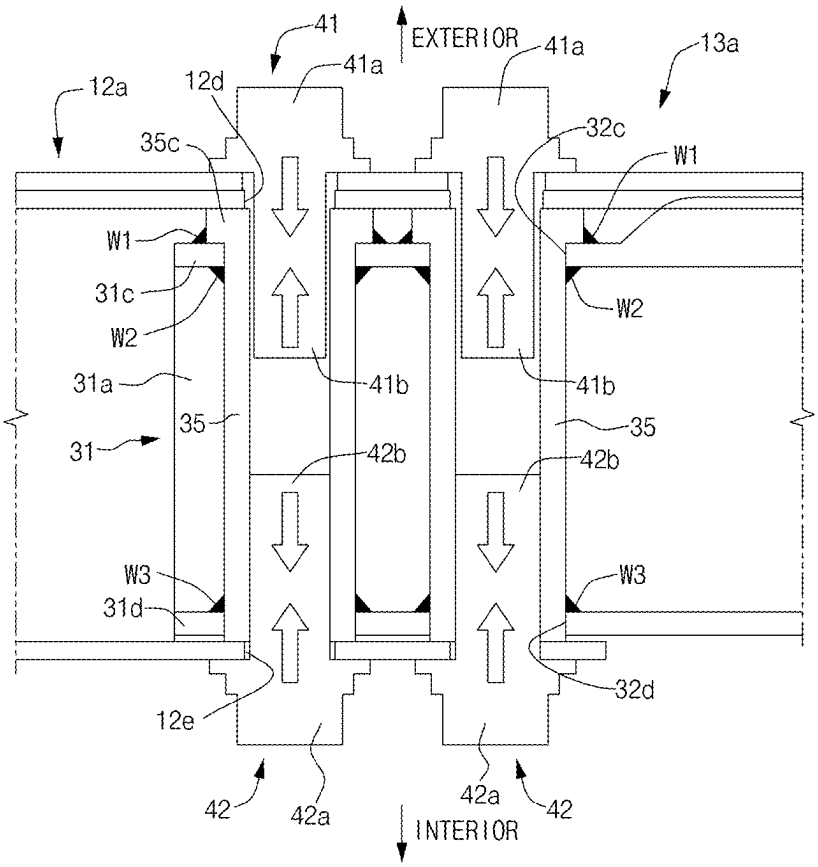
41
EXTERIOR
41a
41a
13a
12a
12d
35c
32c
W1
W1
31c
W2
W2
31a
41b
41b
35
35
31
42b
42b
W3
W3
31d
32d
12e
42
42a
42a
42
INTERIOR

FIG.19

# REAR LOWER MEMBER AND VEHICLE FRONT STRUCTURE INCLUDING THE SAME

## CROSS-REFERENCE TO RELATED APPLICATIONS

**[0001]** This application is a divisional of U.S. application Ser. No. 17/947,416 filed on Sep. 19, 2022, which application claims priority to and the benefit of Korean Patent Application No. 10-2022-0049647 filed in the Korean Intellectual Property Office on Apr. 21, 2022, the entire contents of which are incorporated herein by reference.

## TECHNICAL FIELD

**[0002]** The present disclosure relates to a rear lower member and a vehicle front structure including the same.

## BACKGROUND

**[0003]** As widely known, a vehicle front structure includes a dash panel configured to separate a front compartment and a passenger compartment, and a pair of front side members disposed forward of the dash panel. The pair of front side members are disposed at a front side of a vehicle and spaced apart from each other in a width direction of the vehicle. A pair of side sills are respectively connected to the pair of front side members by means of a pair of rear lower members. A front portion of each of the side sills is connected to a rear portion of each of the front side members by means of the corresponding rear lower member. A pair of front pillars are respectively connected to two opposite side edges of the dash panel. The front side member, the rear lower member, and the side sill are connected in a longitudinal direction of the vehicle, such that the front side member, the rear lower member, and the side sill limit a load path in the longitudinal direction of the vehicle. The front side member, the rear lower member, and the side sill serve as load transfer members that transfer, in the longitudinal direction of the vehicle, a collision load generated in the event of a collision of the vehicle.

**[0004]** As described above, in the case of the vehicle front structure in the related art, the load path is limited only to the longitudinal direction of the vehicle. For this reason, there is a problem in that a collision load or collision energy cannot be uniformly distributed or transferred in various directions.

**[0005]** Meanwhile, some of the load transfer members may each have an open cross-section, and other load transfer members may each have a closed cross-section. The load transfer member having the open cross-section may have a low cross-sectional secondary moment of force when the loads are applied in various directions. For this reason, the load transfer member having the open cross-section may have lower strength than the load transfer member having the closed cross-section.

**[0006]** In the related art, a process of coupling two or more components by fastening, welding, or the like is required to manufacture the load transfer member having the closed cross-section. Because the process of coupling the two or more components is added, there are problems in that the overall manufacturing process may be complicated, manufacturing costs may increase, and production yield may decrease.

**[0007]** In addition, the load transfer member having the two or more components has low coupling strength at a portion where the two or more components are coupled, which may decrease the overall strength of the load transfer member.

**[0008]** Because the vehicle front structure in the related art uses the load transfer member made by coupling the two or more components as described above, there is a problem in that a collision load or collision energy cannot be easily transferred and distributed.

**[0009]** The above information disclosed in this Background section is only for enhancement of understanding of the background of the invention and therefore it may contain information that does not form the prior art that is already known to a person of ordinary skill in the art.

## SUMMARY

**[0010]** Embodiments relate to a rear lower member and a vehicle front structure including the same. Particular relate to a rear lower member, which is capable of improving durability of a vehicle body by securely connecting a front side member, a front pillar, and a side sill, and a vehicle front structure including the same.

**[0011]** Embodiments can provide a vehicle front structure capable of reducing the number of components in comparison with the related art and uniformly distributing and transferring collision loads or collision energy in a vehicle body by providing various load paths extending in various directions.

**[0012]** An exemplary embodiment of the present disclosure provides a vehicle front structure that includes a front pillar, a front side member positioned forward of the front pillar and extending in a longitudinal direction of a vehicle, a side sill connected to a lower end of the front pillar, and a rear lower member connected to a rear portion of the front side member, a front portion of the side sill, and a middle portion of the front pillar. The rear lower member connects the rear portion of the front side member, the front portion of the side sill, and the middle portion of the front pillar, such that the front pillar, the front side member, the rear lower member, and the side sill may define load paths in various directions (a longitudinal direction, a height direction, an inclined direction, and the like) of the vehicle. Therefore, it is possible to uniformly distribute and transfer a collision load or collision energy in various directions.

**[0013]** The rear lower member may be a unitary one-piece structure having one or more closed cross-sections. The rear lower member is configured as a unitary one-piece body having one or more closed cross-sections and manufactured by various casting processes. Therefore, it is possible to reduce manufacturing costs and weight and improve strength and rigidity.

**[0014]** The vehicle front structure according to the exemplary embodiment of the present disclosure may further include a fender apron member extending from the front pillar toward a front side of the vehicle and a fender apron lower member extending in a diagonal direction from the fender apron member to the middle portion of the front pillar. The fender apron lower member extends in the diagonal direction to the middle portion of the front pillar, such that load paths extending in various directions may be implemented.

**[0015]** The front pillar may further include a reinforcing member provided in the front pillar, and a lower end of the fender apron lower member may be fixed to the reinforcing member. The reinforcing member may be aligned with the

middle portion of the front pillar. Since the lower end of the fender apron lower member is fixed to the reinforcing member provided in the front pillar as described above, the coupling rigidity between the fender apron lower member and the middle portion of the front pillar may be improved. Further, the load path may be stably defined between the fender apron member, the fender apron lower member, and the front pillar.

**[0016]** The fender apron member, the fender apron lower member, and the front pillar may define a load path having a triangular truss shape. Therefore, the collision load may be variously distributed and transferred in the diagonal direction, the longitudinal direction, and the height direction between the fender apron member, the fender apron lower member, and the front pillar through the load path having a triangular truss shape.

**[0017]** The rear lower member may include an upper closed cross-section extending in a diagonal direction from the front side member to the middle portion of the front pillar and a lower closed cross-section extending from the front side member to the front portion of the side sill. The upper closed cross-section may define the load path extending in the diagonal direction between the rear portion of the front side member and the middle portion of the front pillar, and the lower closed cross-section may define the load path extending between the rear portion of the front side member and the front portion of the side sill, such that the collision load may be uniformly distributed and transferred through the upper closed cross-section and the lower closed cross-section.

**[0018]** The upper closed cross-section may have an upper space defined therein, and one or more upper partition walls may be provided in the upper space. Therefore, the upper partition wall may improve the rigidity and strength of the upper closed cross-section.

**[0019]** The upper partition wall may have an upper through-hole. Therefore, a sand core used for a casting process may pass through the upper through-hole of the upper partition wall. Therefore, the upper closed cross-section may be accurately and easily manufactured. Further, the amount of use of the sand core may be reduced, which makes it possible to reduce manufacturing costs.

**[0020]** The lower closed cross-section may have a lower space defined therein, and one or more lower partition walls may be provided in the lower space. Therefore, the lower partition wall may improve the rigidity and strength of the lower closed cross-section.

**[0021]** The lower partition wall may have a lower through-hole. Therefore, the sand core used for the casting process may pass through the lower through-hole of the lower partition wall. Therefore, the lower closed cross-section may be accurately and easily manufactured. Further, the amount of use of the sand core may be reduced, which makes it possible to reduce manufacturing costs.

**[0022]** The rear lower member may further include a middle-side closed cross-section disposed between the upper closed cross-section and the lower closed cross-section. The middle-side closed cross-section may be interposed between the upper closed cross-section and the lower closed cross-section, thereby improving the rigidity and strength of the rear lower member.

**[0023]** The middle-side closed cross-section may have a middle-side space defined therein, and one or more middle-side partition walls may be provided in the middle-side space. Therefore, the middle-side partition wall may improve the rigidity and strength of the middle-side closed cross-section.

**[0024]** The middle-side partition wall may have a middle-side through-hole. Therefore, the sand core used for the casting process may pass through the middle-side through-hole of the middle-side partition wall. Therefore, the middle-side closed cross-section may be accurately and easily manufactured. Further, the amount of use of the sand core may be reduced, which makes it possible to reduce manufacturing costs.

**[0025]** The upper closed cross-section of the rear lower member, the front pillar, and the lower closed cross-section of the rear lower member may define a load path having a triangular truss shape. Therefore, the collision load may be variously distributed and transferred in the diagonal direction, the longitudinal direction, and the height direction between the upper closed cross-section of the rear lower member, the front pillar, and the lower closed cross-section of the rear lower member through the load path having a triangular truss shape.

**[0026]** The vehicle front structure according to the exemplary embodiment of the present disclosure may further include a dash panel and one or more dash cross members provided on the dash panel, and the one or more dash cross members may be configured to be aligned with at least one of the closed cross-sections of the rear lower member. Since the one or more dash cross members are aligned with at least one of the closed cross-sections of the rear lower member as described above, the load path may be defined in the width direction of the vehicle between the pair of rear lower members respectively connected to the two opposite left and right sides of the dash panel. Therefore, the collision load may be distributed and transferred to the two opposite left and right sides of the vehicle through the one or more dash cross members.

**[0027]** The vehicle front structure according to the exemplary embodiment of the present disclosure may further include a dash panel, an upper dash cross member attached to the dash panel, and a lower dash cross member attached to the dash panel and disposed below the upper dash cross member. The upper dash cross member may be aligned with the middle-side closed cross-section, and the lower dash cross member may be aligned with the lower closed cross-section.

**[0028]** The vehicle front structure according to the exemplary embodiment of the present disclosure may further include a dash panel, an upper dash cross member attached to the dash panel, and a lower dash cross member attached to the dash panel and disposed below the upper dash cross member. The upper dash cross member may be aligned with the upper closed cross-section, and the lower dash cross member may be aligned with the lower closed cross-section.

**[0029]** The vehicle front structure according to the exemplary embodiment of the present disclosure may further include a dash panel and a dash cross member integrated with the dash panel. The dash panel and the dash cross member may be configured as a unitary one-piece structure, and the dash cross member may be aligned with the middle-side closed cross-section and the lower closed cross-section.

**[0030]** The vehicle front structure according to the exemplary embodiment of the present disclosure may further include a dash panel and a dash cross member integrated with the dash panel. The dash panel and the dash cross

member may be configured as a unitary one-piece structure, and the dash cross member may be aligned with the upper closed cross-section, the middle-side closed cross-section, and the lower closed cross-section.

**[0031]** The rear lower member may include an exterior surface directed toward the outside of the vehicle and an interior surface directed toward a passenger compartment of the vehicle. The upper closed cross-section and the lower closed cross-section may protrude from the interior surface toward the passenger compartment of the vehicle such that a recessed space is defined between the upper closed cross-section and the lower closed cross-section, and a footrest may be disposed in the recessed space. Therefore, it is possible to improve the spatial utilization of the passenger compartment and improve the strength and rigidity between the upper closed cross-section and the lower closed cross-section.

**[0032]** The rear lower member may include a fitting block protruding from a front portion of the rear lower member toward the front side member, the fitting block may be fitted into the rear portion of the front side member, and an exterior side bolt and an interior side bolt may be mounted in the rear portion of the front side member and the fitting block so as to face each other.

**[0033]** The fitting block may include one or more pipe nuts mounted therein, and the exterior side bolt and the interior side bolt may be screw-coupled to the pipe nut. The exterior side bolt and the interior side bolt may be mounted in the rear portion of the front side member and the fitting block of the rear lower member in a direction in which the exterior side bolt and the interior side bolt face each other. Therefore, fastening forces (mechanical coupling forces) may be applied in opposite directions to the rear portion of the front side member and the fitting block of the rear lower member. Therefore, a robust load transfer structure may be implemented between the rear portion of the front side member and the front portion of the rear lower member.

**[0034]** Another exemplary embodiment of the present disclosure provides a rear lower member including an upper extension portion extending in a diagonal direction and having an upper closed cross-section and a lower extension portion positioned at a lower side of the upper extension portion and having a lower closed cross-section.

**[0035]** The rear lower member may further include a middle-side extension portion interposed between the upper extension portion and the lower extension portion and having a middle-side closed cross-section.

**[0036]** The middle-side extension portion may further include a thin-walled cross-section extending from the middle-side closed cross-section.

**[0037]** According to the present disclosure, the rear lower member having a triangular shape may connect the front side member, the front pillar, and the side sill, such that various load paths may extend in various directions. Therefore, the collision energy or collision load may be uniformly distributed and transferred in various directions.

## BRIEF DESCRIPTION OF THE DRAWINGS

**[0038]** FIG. **1** is a perspective view illustrating a vehicle front structure according to an embodiment of the present disclosure.

**[0039]** FIG. **2** is a left side view illustrating the vehicle front structure illustrated in FIG. **1**.

**[0040]** FIG. **3** is a cross-sectional view taken along line A-A in FIG. **2**.

**[0041]** FIG. **4** is a left side view illustrating a state in which a front pillar outer part in FIG. **1** is eliminated.

**[0042]** FIG. **5** is a left side view illustrating a state in which a front pillar in FIG. **1** is eliminated.

**[0043]** FIG. **6** is a top plan view illustrating the vehicle front structure according to the embodiment of the present disclosure.

**[0044]** FIG. **7**A is a cross-sectional view taken along line B-B in FIG. **6**.

**[0045]** FIG. **7**B is a view illustrating a modified embodiment of FIG. **7**A.

**[0046]** FIG. **8**A is a view illustrating a modified embodiment of FIG. **7**A.

**[0047]** FIG. **8**B is a view illustrating a modified embodiment of FIG. **8**A.

**[0048]** FIG. **9** is a perspective view illustrating a rear lower member according to the embodiment of the present disclosure when viewed from the outside of the vehicle.

**[0049]** FIG. **10** is a perspective view illustrating the rear lower member according to the embodiment of the present disclosure when viewed in a passenger compartment of a vehicle.

**[0050]** FIG. **11** is a side view illustrating the rear lower member according to the embodiment of the present disclosure.

**[0051]** FIG. **12** is a top plan view illustrating the rear lower member according to the embodiment of the present disclosure.

**[0052]** FIG. **13** is a cross-sectional view taken along line C-C in FIG. **12**.

**[0053]** FIG. **14** is a cross-sectional view taken along line D-D in FIG. **12**.

**[0054]** FIG. **15** is a cross-sectional view taken along line E-E in FIG. **12**.

**[0055]** FIG. **16** is a cross-sectional view taken along line F-F in FIG. **12**.

**[0056]** FIG. **17** is a cross-sectional view taken along line G-G in FIG. **12**.

**[0057]** FIG. **18** is a cross-sectional view taken along line H-H in FIG. **12**.

**[0058]** FIG. **19** is a cross-sectional view taken along line K-K in FIG. **2**.

## DETAILED DESCRIPTION OF ILLUSTRATIVE EMBODIMENTS

**[0059]** Hereinafter, some embodiments of the present disclosure will be described in detail with reference to the illustrative drawings. In giving reference numerals to constituent elements of the respective drawings, it should be noted that the same constituent elements will be designated by the same reference numerals, if possible, even though the constituent elements are illustrated in different drawings. Further, in the following description of the embodiments of the present disclosure, a detailed description of related publicly-known configurations or functions will be omitted when it is determined that the detailed description obscures the understanding of the embodiments of the present disclosure.

**[0060]** In addition, the terms first, second, A, B, (a), and (b) may be used to describe constituent elements of the embodiments of the present disclosure. These terms are used only for the purpose of discriminating one constituent ele-

ment from another constituent element, and the nature, the sequences, or the orders of the constituent elements are not limited by the terms. Further, unless otherwise defined, all terms used herein, including technical or scientific terms, have the same meaning as commonly understood by those skilled in the art to which the present disclosure pertains. The terms such as those defined in commonly used dictionaries should be interpreted as having meanings consistent with meanings in the context of related technologies and should not be interpreted as ideal or excessively formal meanings unless explicitly defined in the present application.

**[0061]** Referring to FIG. **1**, a vehicle front structure according to an embodiment of the present disclosure may include a dash panel **2**, a pair of front pillars **11** respectively coupled to two opposite side edges of the dash panel **2**, a pair of front side members **12** extending toward a front side of a vehicle from the dash panel **2**, and a pair of side sills **14** disposed at two opposite side edges of a floor **1**. The dash panel **2** may be configured to separate a front compartment FC and a passenger compartment PC. The front compartment may accommodate a powertrain including an electric motor or an internal combustion engine.

**[0062]** A cowl cross **6** may be mounted on an upper edge of the dash panel **2**. The cowl cross **6** may extend in a width direction of the vehicle. The pair of front side members **12** may be spaced apart from each other in the width direction of the vehicle. The front side members **12** may each extend in a longitudinal direction of the vehicle. The pair of front side members **12** may be connected to each other in the width direction of the vehicle by means of a cross member **12***c*. The cross member **12***c* may extend in the width direction of the vehicle. A front back beam **15** may be connected to front portions of the pair of front side members **12** by means of a pair of crush boxes **15***a*. The front back beam **15** may extend in the width direction of the vehicle. Therefore, the front back beam **15** may connect the pair of front side members **12** in the width direction of the vehicle.

**[0063]** Referring to FIG. **2**, a rear portion of each of the front side members **12** may be connected to a front portion of each of the side sills **14** by means of each of the rear lower members **13**. The rear portion **12***a* of each of the front side members **12** may be coupled to a front portion **13***a* of each of the rear lower members **13** by fastening, welding, or the like.

**[0064]** Referring to FIG. **1**, the pair of front pillars **11** may be respectively coupled to the two opposite side edges of the dash panel **2**. The front pillars **11** may each be connected to each of the rear lower members **13** and the front portion of each of the side sills **14**. The front pillar **11** may include an interior surface directed toward the passenger compartment PC of the vehicle, and an exterior surface directed toward the outside of the vehicle.

**[0065]** Referring to FIG. **3**, the front pillar **11** may include a front pillar outer **11***a* directed toward the outside of the vehicle, and a front pillar inner **11***b* directed toward the passenger compartment PC of the vehicle. The front pillar outer **11***a* may have the exterior surface, and the front pillar inner **11***b* may have the interior surface. A cavity may be provided between the front pillar outer **11***a* and the front pillar inner **11***b*. One or more reinforcing members **11***c* may be disposed in the cavity between the front pillar outer **11***a* and the front pillar inner part **11***b*. In particular, the reinforcing member **11***c* may be aligned with a middle portion **11***f* of the front pillar **11**.

**[0066]** The front pillar **11** may be manufactured by press processing, casting, or the like. For example, the front pillar **11** may be manufactured by press processing using a steel plate. As another example, the front pillar **11** may be manufactured by press processing using an aluminum plate. As still another example, the front pillar **11** may be manufactured by high-vacuum die casting using aluminum. As yet another example, the front pillar **11** may be manufactured by low-pressure casting using aluminum.

**[0067]** Referring to FIG. **1**, a pair of fender apron members **3** may be respectively connected to the pair of front pillars **11**. The fender apron members **3** may each extend toward the front side of the vehicle from an upper portion of the front pillar **11** corresponding to the fender apron member **3**. A rear end of each of the fender apron members **3** may be securely coupled to the corresponding front pillar **11** by means of a reinforcing bracket **3***a*.

**[0068]** Referring to FIG. **1**, a pair of fender apron lower members **5** may extend from the pair of fender apron members **3** in a diagonal direction. The fender apron lower members **5** may each be configured to connect the corresponding fender apron member **3** and the middle portion **11***f* of the corresponding front pillar **11** in the diagonal direction. Referring to FIG. **4**, an upper end of each of the fender apron lower members **5** may be fixed to the corresponding fender apron member **3** by fastening, welding, or the like. A lower end of each of the fender apron lower members **5** may be fixed to the middle portion **11***f* of the corresponding front pillar **11** by fastening, welding, or the like. The reinforcing member **11***c* may be aligned with the middle portion **11***f* of the front pillar **11**.

**[0069]** In particular, the fender apron lower member **5** may penetrate a front wall of the front pillar **11**. The lower end of the fender apron lower member **5** may be fixed to the reinforcing member **11***c* by fastening, welding, or the like. Since the lower end of the fender apron lower member **5** is fixed to the reinforcing member **11***c* provided in the front pillar **11** as described above, the coupling rigidity between the fender apron lower member **5** and the middle portion **11***f* of the front pillar **11** may be improved. Further, a load path may be stably defined between the fender apron member **3**, the fender apron lower member **5**, and the front pillar **11**.

**[0070]** Referring to FIG. **1**, a pair of damper housings **4** may be respectively connected to the pair of fender apron members **3**. The damper housings **4** may each be configured to connect the corresponding fender apron member **3** and the corresponding front side member **12**. Specifically, an upper portion of each of the damper housings **4** may be fixed to the corresponding fender apron member **3** by fastening, welding, or the like. A lower portion of each of the damper housings **4** may be fixed to the corresponding front side member **12** by fastening, welding, or the like.

**[0071]** Referring to FIG. **1**, the pair of side sills **14** may be disposed at two opposite sides of the vehicle. The side sills **14** may each extend in the longitudinal direction of the vehicle. The front portion of each of the side sills **14** may be attached to a lower portion of the corresponding front pillar **11**. According to the embodiment, the side sill **14** may be provided in the form of any one of an aluminum extrusion component, an aluminum die casting component, a structure made by coupling a steel pressing component and a steel

pressing reinforcing member, a structure made by coupling a steel pressing component and an aluminum extrusion reinforcing member, and a low-pressure aluminum casting component.

**[0072]** The pair of rear lower members **13** may be symmetrically disposed at the two opposite sides of the dash panel **2**. The rear lower members **13** may each be configured to connect the front side member **12**, the side sill **14**, and the front pillar **11**.

**[0073]** Referring to FIG. **1**, the front pillars **11**, the front side members **12**, the rear lower members **13**, and the side sills **14** may be structurally connected, thereby constituting the vehicle front structure. The front pillars **11**, the front side members **12**, the rear lower members **13**, and the side sills **14** are connected to one another, such that the front pillars **11**, the front side members **12**, the rear lower members **13**, and the side sills **14** may define load paths in various directions (the longitudinal direction, the height direction, the inclined direction, and the like) of the vehicle. The front pillar **11**, the front side member **12**, the rear lower member **13**, and the side sill **14** serve as load transfer members that transfer a collision load, which is generated in the event of a vehicle collision, in the longitudinal direction of the vehicle.

**[0074]** Referring to FIGS. **9** and **10**, the rear lower member **13** may include the front portion **13***a* coupled to the rear portion of the front side member **12**, and a rear portion **13***b* coupled to the front pillar **11** and the side sill **14**. The rear lower member **13** may include an exterior surface **13***c* directed toward the outside of the vehicle, and an interior surface **13***d* directed toward the interior of the vehicle.

**[0075]** Referring to FIG. **2**, the rear lower members **13** may each be configured to connect the rear portion **12***a* of each of the front side members **12** to a front portion **14***a* of the corresponding side sill **14** and the middle portion **11***f* of the front pillar **11**. As described above, the rear lower member **13** connects the rear portion **12***a* of the front side member **12**, the front portion **14***a* of the side sill **14**, and the middle portion **11***f* of the front pillar **11**, such that the front pillar **11**, the front side member **12**, the rear lower member **13**, and the side sill **14** may define the load paths in various directions (the longitudinal direction, the height direction, the inclined direction, and the like) of the vehicle. Therefore, it is possible to distribute and transfer the collision load or collision energy in various directions.

**[0076]** Referring to FIGS. **4**, **9**, and **10**, the rear lower member **13** may include an upper extension portion **21**, a lower extension portion **22** positioned at a lower side of the upper extension portion **21**, and a middle-side extension portion **23** positioned between the upper extension portion **21** and the lower extension portion **22**.

**[0077]** Referring to FIG. **4**, the upper extension portion **21** may extend from the rear portion of the front side member **12** to the middle portion of the corresponding front pillar **11**. The middle portion **11***f* of the front pillar **11** may be positioned to be higher than the rear portion **12***a* of the front side member **12**. The upper extension portion **21** may extend in the diagonal direction from the rear portion of the front side member **12** to the middle portion of the corresponding front pillar **11** while corresponding to a difference in height between the middle portion **11***f* of the front pillar **11** and the rear portion **12***a* of the front side member **12**. In particular, a rear end of the upper extension portion **21** may be aligned with the reinforcing member **11***c* of the front pillar **11**. Therefore, the reinforcing member **11***c* of the front pillar **11** may stably support the collision load transferred through the upper extension portion **21**. The rear end of the upper extension portion **21**, the reinforcing member **11***c*, and the front pillar **11** may be securely connected to one another because the rear end of the upper extension portion **21** and the reinforcing member **11***c* are aligned with the middle portion **11***f* of the front pillar **11**.

**[0078]** Referring to FIGS. **9** to **12**, a cross-sectional area of the upper extension portion **21** may gradually increase in a direction from the front portion toward the rear portion of the upper extension portion **21**. Therefore, the cross-sectional area of the upper extension portion **21** may gradually increase in a direction from the rear portion of the front side member **12** toward the middle portion of the front pillar **11**.

**[0079]** Referring to FIGS. **13** to **17**, the upper extension portion **21** may have an upper closed cross-section **21***a*. The upper closed cross-section **21***a* may be defined by a plurality of walls. The upper closed cross-section **21***a* may extend in a longitudinal direction of the upper extension portion **21**. Therefore, the upper closed cross-section **21***a* may connect the rear portion of the front side member **12** and the middle portion of the front pillar **11** in the diagonal direction. Therefore, the collision load or collision energy transferred to the front side member **12** may be transferred to the middle portion of the front pillar **11** through the upper closed cross-section **21***a*. That is, the upper extension portion **21** and the upper closed cross-section **21***a* may define a load path extending in the diagonal direction between the rear portion of the front side member **12** and the middle portion of the front pillar **11**. Referring to FIG. **14**, the upper extension portion **21** may have an upper space **21***c* defined in the upper closed cross-section **21***a*, and the upper closed cross-section **21***a* and the upper space **21***c* may extend along an overall length of the upper extension portion **21**. Therefore, a length of the upper closed cross-section **21***a* and a length of the upper space **21***c* may be substantially equal to a length of the upper extension portion **21**.

**[0080]** Referring to FIGS. **13** to **16**, the upper extension portion **21** may further include at least one upper partition wall **26** provided in the upper space **21***c* of the upper closed cross-section **21***a*. The upper partition wall **26** may include a flat surface orthogonal to the longitudinal direction of the upper extension portion **21**. The upper partition wall **26** may have an upper through-hole **26***a*. The upper partition wall **26** may be configured to improve the rigidity and strength of the upper extension portion **21** and the upper closed cross-section **21***a*. A sand core used for a casting process may pass through the upper through-hole **26***a* of the upper partition wall **26**. Therefore, the upper closed cross-section **21***a* of the upper extension portion **21** may be accurately and easily manufactured. Further, the amount of use of the sand core may be reduced, which makes it possible to reduce manufacturing costs.

**[0081]** Referring to FIG. **4**, the lower extension portion **22** may extend from the rear portion of the front side member **12** to the front portion of the corresponding side sill **14**. The front portion **14***a* of the side sill **14** may be positioned to be relatively lower than the rear portion **12***a* of the front side member **12**. The lower extension portion **22** may extend in the diagonal direction from the rear portion **12***a* of the front side member **12** to the front portion **14***a* of the corresponding side sill **14** while corresponding to a difference in height

between the rear portion **12***a* of the front side member **12** and the front portion **14***a* of the side sill **14**.

**[0082]** Referring to FIGS. **9** to **12**, a cross-sectional area of the lower extension portion **22** may gradually increase in a direction from the front portion toward the rear portion of the lower extension portion **22**. Therefore, the cross-sectional area of the lower extension portion **22** may gradually increase in a direction from the rear portion **12***a* of the front side member **12** toward the front portion **14***a* of the side sill **14**.

**[0083]** Referring to FIGS. **13** to **17**, the lower extension portion **22** may have a lower closed cross-section **22***a*. The lower closed cross-section **22***a* may be defined by a plurality of walls. The lower closed cross-section **22***a* may extend in a longitudinal direction of the lower extension portion **22**. Therefore, the lower closed cross-section **22***a* may connect the rear portion of the front side member **12** and the front portion (middle portion) of the side sill **14** in the diagonal direction. Therefore, the collision load or collision energy transferred to the front side member **12** may be transferred to the front portion **14***a* of the side sill **14** through the lower closed cross-section **22***a*. That is, the lower extension portion **22** and the lower closed cross-section **22***a* may define a load path extending in the diagonal direction between the rear portion **12***a* of the front side member **12** and the front portion **14***a* of the side sill **14**. Referring to FIGS. **13** and **14**, the lower extension portion **22** may have a lower space **22***c* defined in the lower closed cross-section **22***a*, and the lower closed cross-section **22***a* and the lower space **22***c* may extend along an overall length of the lower extension portion **22**. Therefore, a length of the lower closed cross-section **22***a* and a length of the lower space **22***c* may be substantially equal to a length of the lower extension portion **22**.

**[0084]** Referring to FIGS. **13** to **16**, the lower extension portion **22** may further include one or more lower partition walls **27** and **28** provided in the lower space **22***c* of the lower closed cross-section **22***a*. According to the specific embodiment, the first lower partition wall **27** may include a flat surface orthogonal to the longitudinal direction of the upper extension portion **21**. The first lower partition wall **27** may have a lower through-hole **27***a*. The second lower partition wall **28** may include a flat surface extending in the longitudinal direction of the lower extension portion **22**. The first lower partition wall **27** and the second lower partition wall **28** may be configured to improve the rigidity and strength of the lower extension portion **22** and the lower closed cross-section **22***a*. The sand core used for the casting process may pass through the lower through-hole **27***a* of the first lower partition wall **27**. Therefore, the lower closed cross-section **22***a* of the lower extension portion **22** may be accurately and easily manufactured. Further, the amount of use of the sand core may be reduced, which makes it possible to reduce manufacturing costs.

**[0085]** Referring to FIG. **4**, the middle-side extension portion **23** may be interposed between the upper extension portion **21** and the lower extension portion **22**. The middle-side extension portion **23** may extend from the rear portion of the front side member **12** to the lower portion of the corresponding front pillar **11**.

**[0086]** Referring to FIGS. **9** to **12**, a height of the middle-side extension portion **23** may gradually increase in a direction from the front portion toward the rear portion of the middle-side extension portion **23**. Therefore, the height of the middle-side extension portion **23** may gradually increase in a direction from the rear portion of the front side member **12** toward the lower portion of the front pillar **11**. For example, the middle-side extension portion **23** may have a triangular shape.

**[0087]** Referring to FIGS. **13** to **16**, the middle-side extension portion **23** may include a middle-side closed cross-section **23***a*, and a thin-walled cross-section **23***b* connected to the middle-side closed cross-section **23***a*. The middle-side closed cross-section **23***a* may be defined by a plurality of walls. The middle-side closed cross-section **23***a* may extend in a longitudinal direction thereof in a front region of the middle-side extension portion **23**. The middle-side closed cross-section **23***a* may have an upper common wall that the middle-side closed cross-section **23***a* at least partially shares with the upper closed cross-section **21***a*. The middle-side closed cross-section **23***a* may have a lower common wall that the middle-side closed cross-section **23***a* at least partially shares with the lower closed cross-section **22***a*.

**[0088]** Specifically, an upper wall of the middle-side closed cross-section **23***a* may be the upper common wall that the middle-side closed cross-section **23***a* shares with at least a part a lower wall of the upper closed cross-section **21***a*. A lower wall of the middle-side closed cross-section **23***a* may be the lower common wall that the middle-side closed cross-section **23***a* shares with at least a part of an upper wall of the lower closed cross-section **22***a*. As described above, the middle-side closed cross-section **23***a* may be interposed between the upper closed cross-section **21***a* and the lower closed cross-section **22***a*, thereby improving the rigidity and strength of the rear lower member **13**. The thin-walled cross-section **23***b* may extend from a rear edge of the middle-side closed cross-section **23***a* to a rear edge of the middle-side extension portion **23**.

**[0089]** The middle-side closed cross-section **23***a* and the intermediate space **23***c* may be provided at the front portion of the middle-side extension portion **23**, and the thin-walled cross-section **23***b* may be provided at the rear portion of the middle-side extension portion **23**. The middle-side extension portion **23** may have a middle-side space **23***c* defined in the middle-side closed cross-section **23***a*. A length of the middle-side closed cross-section **23***a* and a length of the middle-side space **23***c* may be relatively shorter than an overall length of the middle-side extension portion **23**.

**[0090]** Referring to FIGS. **13** to **16**, the middle-side extension portion **23** may further include at least one middle-side partition wall **29** provided in the middle-side space **23***c* of the middle-side closed cross-section **23***a*. The middle-side partition wall **29** may include a flat surface orthogonal to a longitudinal direction of the middle-side extension portion **23**. The middle-side partition wall **29** may have a middle-side through-hole **29***a*. The middle-side partition wall **29** may be configured to improve the rigidity and strength of the middle-side extension portion **23** and the middle-side closed cross-section **23***a*. The sand core used for the casting process may pass through the middle-side through-hole **29***a* of the middle-side partition wall **29**. Therefore, the middle-side closed cross-section **23***a* of the middle-side extension portion **23** may be accurately and easily manufactured. Further, the amount of use of the sand core may be reduced, which makes it possible to reduce manufacturing costs.

**[0091]** Referring to FIG. **17**, the thin-walled cross-section **23***b* may be a solid cross-section that does not have a space therein. The upper extension portion **21** and the upper closed cross-section **21***a* may protrude from the thin-walled cross-

section **23***b* toward the passenger compartment PC of the vehicle. The lower extension portion **22** and the lower closed cross-section **22***a* may protrude from the thin-walled cross-section **23***b* toward the passenger compartment PC of the vehicle. Therefore, the rear lower member **13** may further include a recessed space **49** disposed in the interior surface **13***d* and defined by the upper extension portion **21**, the lower extension portion **22**, and the thin-walled cross-section **23***b*. A footrest **9** configured to support a foot of a driver or occupant may be disposed in the recessed space **49**. Therefore, it is possible to improve the spatial utilization of the passenger compartment and improve the strength and rigidity between the upper closed cross-section **21***a* and the lower closed cross-section **22***a*.

**[0092]** Referring to FIG. **9**, a plurality of exterior ribs **21***f*, **21***g*, **22***f*, **22***g*, **23***f*, and **23***g* may be provided on the exterior surface **13***c* of the rear lower member **13**. The plurality of exterior ribs **21***f*, **21***g*, **22***f*, **22***g*, **23***f*, and **23***g* may include a plurality of upper ribs **21***f* and **21***g*, a plurality of lower ribs **22***f* and **22***g*, and a plurality of intermediate ribs **23***f* and **23***g*. The plurality of upper ribs **21***f* and **21***g* may be provided on an upper portion of the exterior surface **13***c* corresponding to the upper extension portion **21**. The plurality of upper ribs **21***f* and **21***g* may include an upper longitudinal rib **21***f* extending in the longitudinal direction of the upper extension portion **21**, and an upper transverse rib **21***g* configured to intersect the upper longitudinal rib **21***f* at a predetermined angle. The plurality of lower ribs **22***f* and **22***g* may be provided on a lower portion of the exterior surface corresponding to the lower extension portion **22**. The plurality of lower ribs **22***f* and **22***g* may include a lower longitudinal rib **22***f* extending in the longitudinal direction of the lower extension portion **22**, and a lower transverse rib **22***g* configured to intersect the lower longitudinal rib **22***f* at a predetermined angle. The plurality of intermediate ribs **23***f* and **23***g* may be provided on a middle portion of the exterior surface corresponding to the middle-side extension portion **23**. The plurality of intermediate ribs **23***f* and **23***g* may include an intermediate longitudinal rib **23***f* extending in the longitudinal direction of the middle-side extension portion **23**, and an intermediate transverse rib **23***g* configured to intersect the intermediate longitudinal rib **23***f* at a predetermined angle.

**[0093]** Referring to FIG. **10**, a plurality of interior ribs **21***j*, **21***k*, **23***j*, and **23***k* may be provided on the interior surface **13***d* of the rear lower member **13**. The plurality of interior ribs **21***j*, **21***k*, **23***j*, and **23***k* may include a plurality of upper ribs **21***j* and **21***k*, and a plurality of intermediate ribs **23***j* and **23***k*. The plurality of upper ribs **21***j* and **21***k* may be provided on an upper portion of the interior surface **13***d* corresponding to the upper extension portion **21**. The plurality of upper ribs **21***j* and **21***k* may include an upper longitudinal rib **21***j* extending in the longitudinal direction of the upper extension portion **21**, and an upper transverse rib **21***k* configured to intersect the upper longitudinal rib **21***j* at a predetermined angle. The plurality of intermediate ribs **23***j* and **23***k* may be provided on a middle portion of the interior surface **13***d* corresponding to the middle-side extension portion **23**. The plurality of intermediate ribs **23***j* and **23***k* may include an intermediate longitudinal rib **23***j* extending in the longitudinal direction of the middle-side extension portion **23**, and an intermediate transverse rib **23***k* configured to intersect the intermediate longitudinal rib **23***j* at a predetermined angle. In particular, the plurality of intermediate ribs **23***j* and **23***k* is provided on the thin-walled cross-section **23***b* of the middle-side extension portion **23**, such that the rigidity and strength of the thin-walled cross-section **23***b* of the middle-side extension portion **23** may be improved. Therefore, the thin-walled cross-section **23***b* of the middle-side extension portion **23** may securely support the footrest **9**.

**[0094]** According to the embodiment, the rear lower member **13** is manufactured by various casting processing methods such as low-pressure hollow casting (i.e., low-pressure casting or low-pressure die casting), high-pressure die casting, and gravity casting, such that the upper extension portion **21**, the lower extension portion **22**, the middle-side extension portion **23**, the upper closed cross-section **21***a*, the lower closed cross-section **22***a*, and the middle-side closed cross-section **23***a* may constitute a unitary one-piece structure. In particular, the rear lower member **13** has the upper closed cross-section **21***a*, the lower closed cross-section **22***a*, and the middle-side closed cross-section **23***a*. Therefore, it is possible to reduce manufacturing costs and weight and improve strength and rigidity even though the rear lower member **13** is manufactured by low-pressure casting.

**[0095]** Referring to FIGS. **9** and **10**, the rear lower member **13** may include an upper edge **13***f* and a lower edge **13***g*. Referring to FIGS. **9** to **12**, the rear lower member **13** may include an exterior flange **24** and a plurality of interior flanges **25***a* and **25***b*. The exterior flange **24** may be fixed to a front surface of the front pillar **11** and a front surface of the side sill **14** by fastening, welding, or the like. The plurality of interior flanges **25***a* and **25***b* may be fixed to the dash panel **2** by fastening, welding, or the like. The plurality of interior flanges **25***a* and **25***b* may include a first interior flange **25***a* connected to the upper edge **13***f*, and a second interior flange **25***b* connected to the lower edge **13***g*. The first interior flange **25***a* may be fixed to an upper dash panel **2***a* by fastening, welding, or the like. The second interior flange **25***b* may be fixed to a lower dash panel **2***b* by fastening, welding, or the like. As described above, the rear lower member **13** may be securely fixed to the dash panel **2** by means of the exterior flange **24** and the plurality of interior flanges **25***a* and **25***b*, thereby sufficiently ensuring the structural rigidity between the rear lower member **13** and the dash panel **2**.

**[0096]** Referring to FIGS. **9** to **12**, the rear lower member **13** may include an upper mounting flange **21***s* provided at a rear end of the upper extension portion **21**, a lower mounting flange **22***s* provided at a rear end of the lower extension portion **22**, and a middle-side mounting flange **23***s* provided at a rear end of the middle-side extension portion **23**. The upper mounting flange **21***s* may be shaped to surround the upper closed cross-section **21***a* of the upper extension portion **21**. The lower mounting flange **22***s* may be shaped to surround the lower closed cross-section **22***a* of the lower extension portion **22**. The middle-side mounting flange **23***s* may extend along the thin-walled cross-section **23***b* of the middle-side extension portion **23**.

**[0097]** Referring to FIG. **3**, the upper mounting flange **21***s* may be fixed to the interior surface of the front pillar **11** by fastening, welding, or the like. The lower mounting flange **22***s* may be fixed to the interior surface of the side sill **14** by fastening, welding, or the like. The middle-side mounting flange **23***s* may be fixed to the interior surface of the front pillar **11** and the interior surface of the side sill **14** by fastening, welding, or the like. As described above, the rear lower member **13** may be securely fixed to the front pillar **11**

and the side sill **14** by means of the upper mounting flange **21***s*, the middle-side mounting flange **23***s*, and the lower mounting flange **22***s*, thereby sufficiently ensuring the coupling rigidity between the rear lower member **13**, the front pillar **11**, and the side sill **14**.

**[0098]** Referring to FIG. **6**, the pair of rear lower members **13** may be connected to each other in the width direction of the vehicle by means of the dash panel **2**. Therefore, the collision load may be transferred in the width direction of the vehicle through the front side member **12**, the rear lower member **13**, and the dash panel **2**. The dash panel **2** may have one or more closed cross-sections **51** and **52** that connect the pair of rear lower members **13** in the width direction of the vehicle. The closed cross-sections **51** and **52** may extend in the width direction of the vehicle. The closed cross-sections **51** and **52** may be defined by one or more dash cross members **17** and **18**.

**[0099]** Referring to FIG. **7**A, the dash panel **2** may include the upper dash panel **2***a*, and the lower dash panel **2***b* connected to a lower edge of the upper dash panel **2***a*. The lower dash panel **2***b* may include an upper closed cross-section **51**, a lower closed cross-section **52** positioned at a lower side of the upper closed cross-section **51**. The lower dash panel **2***b* may include a lower flat portion **7***a* extending from a lower portion of the lower dash panel **2***b* toward a rear side of the vehicle, and a lower inclined portion **7***b* extending from the lower flat portion **7***a* in the diagonal direction. The floor **1** may include a front flat portion **1***a*, and a front inclined portion **1***b* inclined from the front flat portion **1***a* toward the lower dash panel **2***b*. The upper dash cross member **17** may be attached to an upper portion of the lower dash panel **2***b*, thereby defining the upper closed cross-section **51** of the dash panel **2**. Specifically, the upper dash cross member **17** may be mounted on a front surface of the lower dash panel **2***b*, such that the upper dash cross member **17**, together with the front surface of the lower dash panel **2***b*, may define the upper closed cross-section **51** of the dash panel **2**. The lower flat portion **7***a* of the lower dash panel **2***b* may be parallel to the front flat portion **1***a* of the floor **1**. The lower inclined portion **7***b* of the lower dash panel **2***b* may be parallel to the front inclined portion **1***b* of the floor **1**. The lower dash cross member **18** may be attached to a lower portion of the lower dash panel **2***b*, thereby defining the lower closed cross-section **52** of the dash panel **2**. The lower flat portion **7***a* and the lower inclined portion **7***b* of the lower dash panel **2***b* are mounted on the front flat portion **1***a* and the front inclined portion **1***b* of the floor **1**, such that the lower flat portion **7***a* and the lower inclined portion **7***b* of the lower dash panel **2***b*, together with the lower dash cross member **18** and the front flat portion **1***a* and the front inclined portion **1***b* of the floor **1**, may define the lower closed cross-section **52** of the dash panel **2**.

**[0100]** Referring to FIG. **7**A, the upper dash cross member **17** may be positioned adjacent to the lower flat portion **7***a* of the lower dash panel **2***b*. The upper dash cross member **17** and the upper closed cross-section **51** of the dash panel **2** may be aligned with the middle-side closed cross-section **23***a* of the middle-side extension portion **23**. The lower dash cross member **18** and the lower closed cross-section **52** of the dash panel **2** may be aligned with the lower closed cross-section **22***a* of the lower extension portion **22**.

**[0101]** According to another embodiment, as illustrated in FIG. **7**B, the upper dash cross member **17** may be positioned on the upper portion of the lower dash panel **2***b*. The upper dash cross member **17** and the upper closed cross-section **51** of the dash panel **2** may be aligned with the upper closed cross-section **21***a* of the upper extension portion **21**. The lower dash cross member **18** and the lower closed cross-section **52** of the dash panel **2** may be aligned with the lower closed cross-section **22***a* of the lower extension portion **22**.

**[0102]** FIG. **8**A is a cross-sectional view illustrating the dash panel **2** according to another embodiment.

**[0103]** Referring to FIG. **8**A, the dash panel **2** may include the upper dash panel **2***a*. A dash cross member **8** may be connected to a lower portion of the dash panel **2**. Specifically, the dash cross member **8** may be connected to a lower edge of the upper dash panel **2***a*. The dash cross member **8** may have a closed cross-section **60** defined by a plurality of walls. The closed cross-section **60** may be aligned with the middle-side extension portion **23** and the lower extension portion **22** of the rear lower member **13**. Specifically, the dash cross member **8** may include an upper wall **8***a*, a front wall **8***b* extending vertically from a front edge of the upper wall **8***a*, a front inclined wall **8***c* inclined downward from the front wall **8***b*, a bottom wall **8***d* extending horizontally from a lower edge of the front inclined wall **8***c* toward the rear side of the vehicle, a rear wall **8***f* extending vertically from a rear edge of the upper wall **8***a*, and a rear inclined wall **8***h* inclined downward from the rear wall **8***f* toward a rear edge of the bottom wall **8***d*.

**[0104]** In addition, the dash cross member **8** may include an upper flange **8***g* extending vertically from the rear wall **8***f*. The upper flange **8***g* may be fixed to a lower edge of the upper dash panel **2***a* by fastening, welding, or the like. The upper flange **8***g* of the dash cross member **8** is fixed to the lower edge of the upper dash panel **2***a*, such that the rear wall **8***f* of the dash cross member **8** may be vertically aligned with the upper dash panel **2***a* of the dash panel **2**. Therefore, the rear wall **8***f* and the rear inclined wall **8***h* of the dash cross member **8** may serve as the lower dash panel **2***b* illustrated in FIGS. **7** and **7**B. A plurality of partition walls **61** and **62** is provided in an internal space of the dash cross member **8**, such that the internal space of the closed cross-section **60** may be divided by the plurality of partition walls **61** and **62**.

**[0105]** According to another embodiment, as illustrated in FIG. **8**B, the upper wall **8***a*, the front wall **8***b*, and the rear wall **8***f* of the dash cross member **8** may extend upward. Therefore, the closed cross-section **60** of the dash cross member **8** may be entirely aligned with the upper closed cross-section **21***a* of the upper extension portion **21**, the middle-side closed cross-section **23***a* of the middle-side extension portion **23**, and the lower closed cross-section **22***a* of the lower extension portion **22** of the rear lower member **13**.

**[0106]** Referring to FIG. **2**, the upper closed cross-section **21***a* of the upper extension portion **21**, the lower closed cross-section **22***a*, and the front pillar **11** may define a load path TR**1** having a triangular truss shape. Therefore, the collision load may be variously distributed and transferred in the diagonal direction, the longitudinal direction, and the height direction between the upper closed cross-section **21***a* of the rear lower member **13**, the front pillar **11**, and the lower closed cross-section **22***a* of the rear lower member **13** through the load path TR**1** having a triangular truss shape.

**[0107]** Referring to FIG. **2**, the fender apron member **3**, the fender apron lower member **5**, and the front pillar **11** may define a load path TR**2** having a triangular truss shape. Therefore, the collision load may be variously distributed

and transferred in the diagonal direction, the longitudinal direction, and the height direction between the fender apron member **3**, the fender apron lower member **5**, and the front pillar **11** through the load path TR**2** having a triangular truss shape.

**[0108]** As described above, the two load paths TR**1** and TR**2** each having a triangular truss shape are provided in the vehicle front structure by the rear lower member **13** and the fender apron lower member **5**, such that the load paths may be defined in various directions. Therefore, the collision load transferred to the front side member **12** and the rear lower member **13** may be transferred to the fender apron member **3** through the front pillar **11**, thereby distributing and transferring the collision load in various directions.

**[0109]** Referring to FIGS. **9** to **12**, the rear lower member **13** may further include a fitting block **31** protruding from the front portion **13***a*. The fitting block **31** may include an upper wall **31***a* directed toward a top side of the vehicle, a bottom wall **31***b* directed toward a bottom side of the vehicle, an exterior wall **31***c* directed toward the outside of the vehicle, an interior wall **31***d* directed toward the interior of the vehicle, and two partition walls **31***e* and **31***f* provided in an internal space of the fitting block **31**.

**[0110]** The fitting block **31** may include an upper closed cross-section **36** connected to the upper closed cross-section **21***a*, a lower closed cross-section **37** connected to the lower closed cross-section **22***a*, and a middle-side closed cross-section **38** connected to the middle-side closed cross-section **23***a*. The upper closed cross-section **36** may be defined by the upper wall **31***a*, the exterior wall **31***c*, the interior wall **31***d*, and the upper partition wall **31***e*. The lower closed cross-section **37** may be defined by the bottom wall **31***b*, the exterior wall **31***c*, the interior wall **31***d*, and the lower partition wall **31***f*. The middle-side closed cross-section **38** may be defined by the upper partition wall **31***e*, the exterior wall **31***c*, the interior wall **31***d*, and the lower partition wall **31***f*.

**[0111]** The fitting block **31** may have a plurality of through-holes **32***c* and **32***d*, and pipe nuts **35** may be mounted in the plurality of through-holes **32***c* and **32***d* by welding w**1**, w**2**, and w**3**. The exterior side through-holes **32***c* may be provided in the exterior wall **31***c*, and the interior side through-holes **32***d* may be provided in the interior wall **31***d*. A central axis of the exterior side through-hole **32***c* may be aligned with a central axis of the interior side through-hole **32***d*. The pipe nut **35** may be fitted into the exterior side through-hole **32***c* and the interior side through-hole **32***d*. An internal thread portion may be formed on an inner peripheral surface of the pipe nut **35**. The pipe nut **35** may include a first end **35***a* fixed to the exterior wall **31***c* by welding w**1** and w**2**, and a second end **35***b* fixed to the interior wall **31***d* by welding w**3**.

**[0112]** A part of the first end **35***a* may protrude from the exterior wall **31***c* toward the outside of the vehicle. An outer peripheral surface of the protruding portion of the first end **35***a* may be fixed to the exterior wall **31***c* by all-around welding w**1**. An outer peripheral surface of the first end **35***a* positioned in the internal space of the fitting block **31** may be fixed to the exterior wall **31***c* by partial welding w**2** performed on the outer peripheral surface of the first end **35***a* at about 160°. The pipe nut **35** may have a head portion **35***c* provided at the first end **35***a*. The head portion **35***c* may prevent the pipe nut **35** from separating from the through-holes **32***c* and **32***d* of the fitting block **31**. An outer peripheral surface of the second end **35***b* positioned in the internal space of the fitting block **31** may be fixed to the interior wall **31***d* by partial welding w**3** performed on the outer peripheral surface of the second end **35***b* at about 160°. According to the embodiment, the welding w**1**, w**2**, and w**3** may be performed by MIG welding.

**[0113]** Referring to FIG. **19**, the fitting block **31** may be configured to be fitted into an internal space of the rear portion **12***a* of the front side member **12**. Specifically, the fitting block **31** may be press-fitted into the internal space of the rear portion **12***a* of the front side member **12**. The front side member **12** may have an exterior wall directed toward the outside of the vehicle, and an interior wall directed toward the interior of the vehicle. In addition, the rear portion **12***a* of the front side member **12** may have an exterior side through-hole **12***d* provided in the exterior wall, and an interior side through-hole **12***e* provided in the interior wall. A central axis of the exterior side through-hole **12***d* may be aligned with a central axis of the interior side through-hole **12***e*. Therefore, the exterior side through-hole **12***d* and the interior side through-hole **12***e* of the front side member **12** may be aligned with the exterior side through-hole **32***c* and the interior side through-hole **32***d* of the fitting block **31**.

**[0114]** Referring to FIG. **19**, exterior side bolts **41** may fasten the exterior wall of the rear portion **12***a* of the front side member **12** and the exterior wall **31***c* of the fitting block **31**. The exterior side bolt **41** may include a head portion **41***a*, and a threaded portion **41***b* extending from the head portion **41***a*. The threaded portion **41***b* of the exterior side bolt **41** may be screw-coupled to the internal thread portion of the pipe nut **35**.

**[0115]** Referring to FIG. **19**, interior side bolts **42** may fasten the interior wall of the rear portion **12***a* of the front side member **12** and the interior wall **31***d* of the fitting block **31**. The interior side bolt **42** may include a head portion **42***a*, a threaded portion **42***b* extending from the head portion **42***a*. The threaded portion **42***b* of the interior side bolt **42** may be screw-coupled to the internal thread portion of the pipe nut **35**.

**[0116]** As described above, the exterior side bolt **41** and the interior side bolt **42** may fasten the rear portion **12***a* of the front side member **12** and the fitting block **31** of the rear lower member **13** in a direction in which the exterior side bolt **41** and the interior side bolt **42** face each other. Therefore, fastening forces (mechanical coupling forces) may be applied in opposite directions to the rear portion **12***a* of the front side member **12** and the fitting block **31** of the rear lower member **13** (see the directions indicated by the arrows in FIG. **19**). Therefore, a robust load transfer structure may be implemented between the rear portion **12***a* of the front side member **12** and the front portion **13***a* of the rear lower member **13**.

**[0117]** The above description is simply given for illustratively describing the technical spirit of the present disclosure, and those skilled in the art to which the present disclosure pertains will appreciate that various changes and modifications are possible without departing from the essential characteristic of the present disclosure.

**[0118]** Therefore, the embodiments disclosed in the present disclosure are provided for illustrative purposes only but not intended to limit the technical spirit of the present disclosure. The scope of the technical spirit of the present disclosure is not limited thereby. The protective scope of the

present disclosure should be construed based on the following claims, and all the technical spirit in the equivalent scope thereto should be construed as falling within the scope of the present disclosure.

What is claimed is:

**1**. A rear lower member comprising:

an upper extension portion extending in a diagonal direction and having an upper closed cross-section; and

a lower extension portion positioned at a lower side of the upper extension portion and having a lower closed cross-section.

**2**. The rear lower member of claim **1**, further comprising a middle-side extension portion interposed between the upper extension portion and the lower extension portion, the middle-side extension portion having a middle-side closed cross-section.

**3**. The rear lower member of claim **2**, wherein the middle-side extension portion further comprises a thin-walled cross-section extending from the middle-side closed cross-section.

**4**. The rear lower member of claim **1**, wherein the upper closed cross-section comprises an upper space defined therein.

**5**. The rear lower member of claim **4**, wherein the upper closed cross-section further comprises an upper partition wall disposed in the upper space.

**6**. The rear lower member of claim **5**, wherein the upper partition wall has an upper through-hole.

**7**. The rear lower member of claim **1**, wherein the rear lower member is a unitary one-piece structure.

**8**. The rear lower member of claim **1**, wherein:

the rear lower member is a portion of a vehicle front structure, and

the vehicle front structure further comprises:

a front pillar;

a front side member positioned forward of the front pillar and extending in a longitudinal direction of a vehicle; and

a side sill connected to a lower end of the front pillar.

**9**. The rear lower member of claim **8**, wherein the lower closed cross-section extends from the front side member to a front portion of the side sill.

**10**. The rear lower member of claim **1**, wherein the lower closed cross-section has a lower space defined therein.

**11**. The rear lower member of claim **10**, further comprising a lower partition wall disposed in the lower space.

**12**. The rear lower member of claim **11**, wherein the lower partition wall has a lower through-hole.

**13**. The rear lower member of claim **1**, further comprising a middle-side closed cross-section disposed between the upper closed cross-section and the lower closed cross-section.

**14**. The rear lower member of claim **13**, wherein the middle-side closed cross-section has a middle-side space defined therein.

**15**. The rear lower member of claim **14**, further comprising a middle-side partition wall disposed in the middle-side space.

**16**. The rear lower member of claim **1**, further comprising:

an exterior surface directed toward an outside of a vehicle; and

an interior surface directed toward a passenger compartment of the vehicle.

**17**. The rear lower member of claim **16**, wherein the upper closed cross-section and the lower closed cross-section protrude from the interior surface toward the passenger compartment of the vehicle such that a recessed space is defined between the upper closed cross-section and the lower closed cross-section.

**18**. The rear lower member of claim **17**, wherein a footrest is disposed in the recessed space.

**19**. The rear lower member of claim **1**, further comprising a fitting block protruding from a front portion of the rear lower member.

**20**. The rear lower member of claim **19**, wherein the fitting block is fitted into a rear portion of a front side member of a vehicle front structure.

* * * * *