US 20250283564A1

(19) United States
(12) Patent Application Publication
Cook et al.
(10) Pub. No.: US 2025/0283564 A1
(43) Pub. Date: Sep. 11, 2025

(54) **END FITTINGS FOR FLEXIBLE PIPE SEGMENTS**

(71) Applicant: **FMC Technologies, Inc.**, Houston, TX (US)

(72) Inventors: **James Cook**, Houston, TX (US); **James R. Soltau**, Stephenville, TX (US); **Cody Bedwell**, Houston, TX (US); **Corey Massey**, Houston, TX (US); **Yaswanth Kasireddy**, Houston, TX (US)

(73) Assignee: **FMC Technologies, Inc.**, Houston, TX (US)

(21) Appl. No.: **19/220,804**

(22) Filed: **May 28, 2025**

Related U.S. Application Data

(63) Continuation of application No. 17/964,606, filed on Oct. 12, 2022, now Pat. No. 12,352,374.

Publication Classification

(51) **Int. Cl.**
F16L 33/18 (2006.01)
F16L 33/01 (2006.01)
F16L 33/28 (2006.01)

(52) **U.S. Cl.**
CPC ***F16L 33/18*** (2013.01); ***F16L 33/28*** (2013.01); *F16L 33/01* (2013.01)

(57) **ABSTRACT**

A pipe assembly includes a flexible pipe segment and at least one end fitting. The at least one end fitting includes an end casing coupled to the flexible pipe segment and a seal housing removably coupled to the end casing. The end casing defines a seal housing-receiving bore extending longitudinally through the end casing, and the seal housing is positioned within the seal housing-receiving bore. The seal housing defines at least one seal bore extending from an axially distal surface of the seal housing, and one or more sealing elements are seated in a respective one of the at least one seal bore. The end casing is couplable to a counterpart fitting, and the seal housing and/or the one or more sealing elements are configured to define a sealing interface with the counterpart fitting.

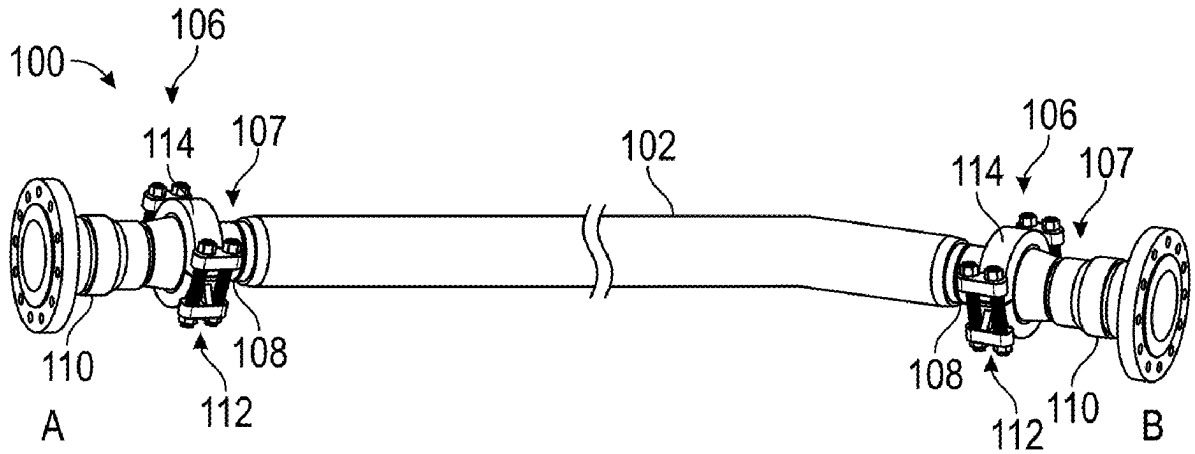

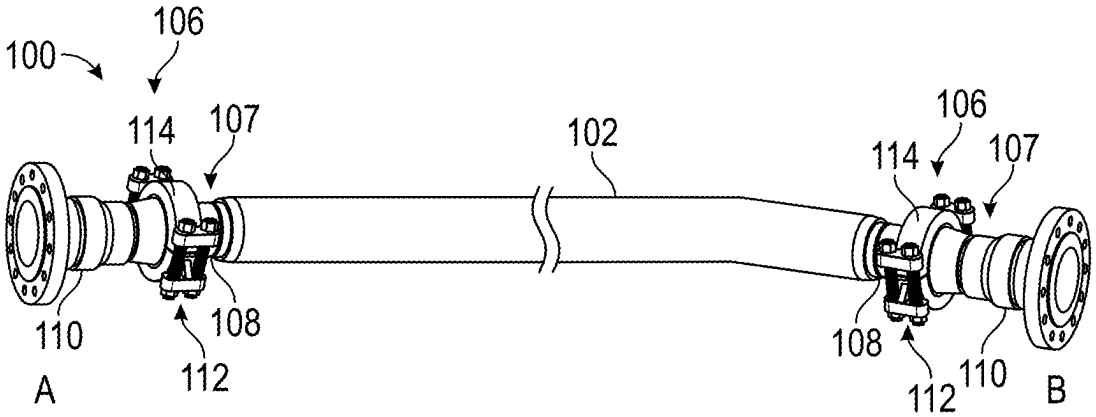
100
106
114
107
102
106
114
107
110
108
112
A
108
112
110
B

FIG. 1A

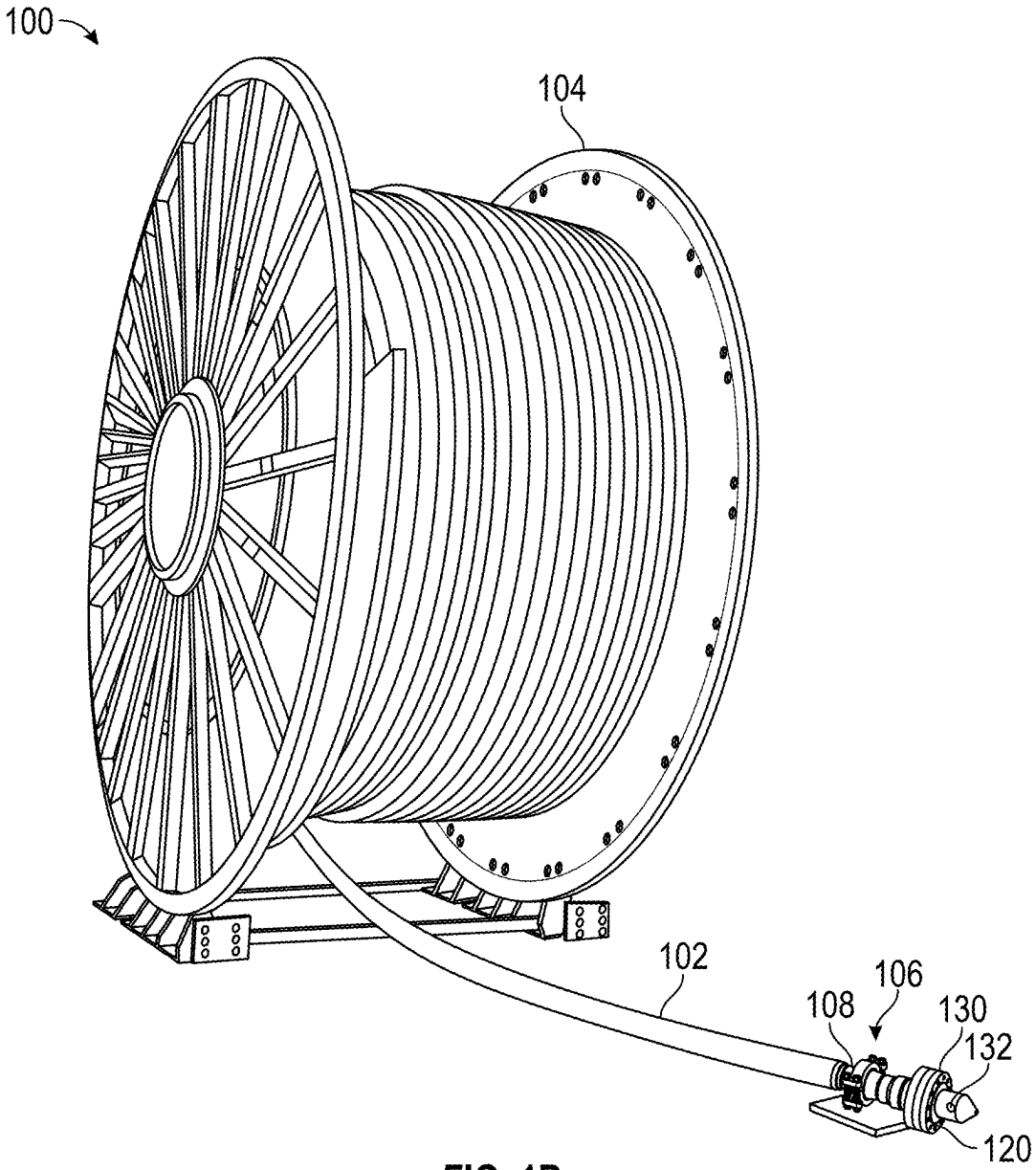
100
104
102
106
108
130
132
120

FIG. 1B

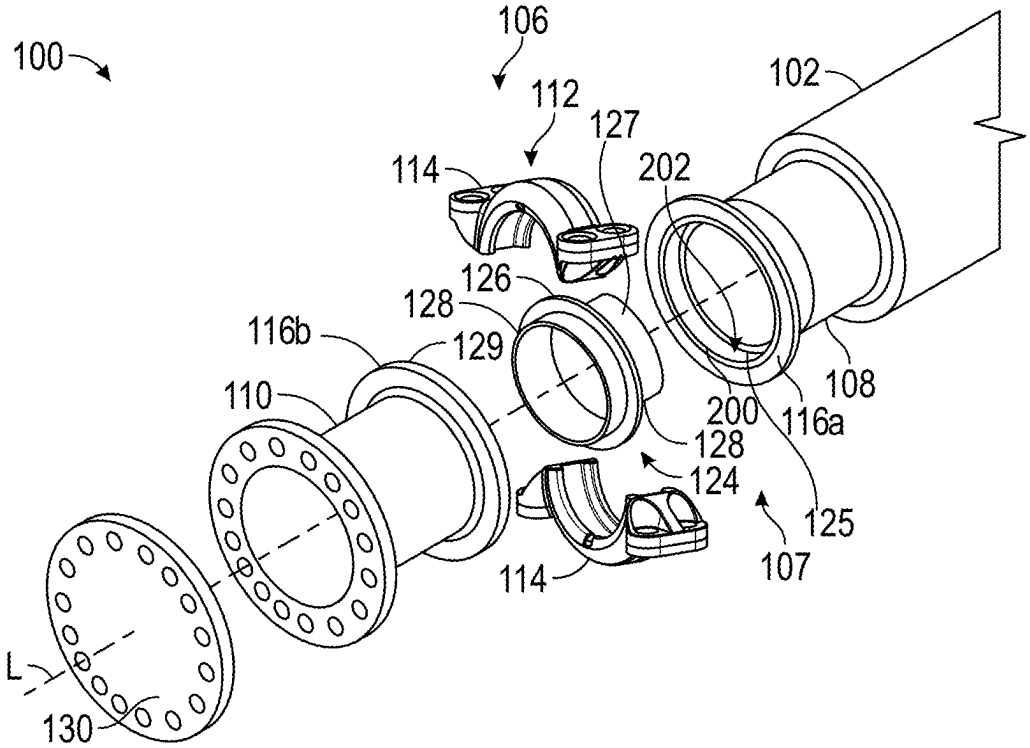
100
106
112
102
127
114
202
126
128
116b
129
110
108
200
116a
128
124
125
107
114
L
130

FIG. 1C

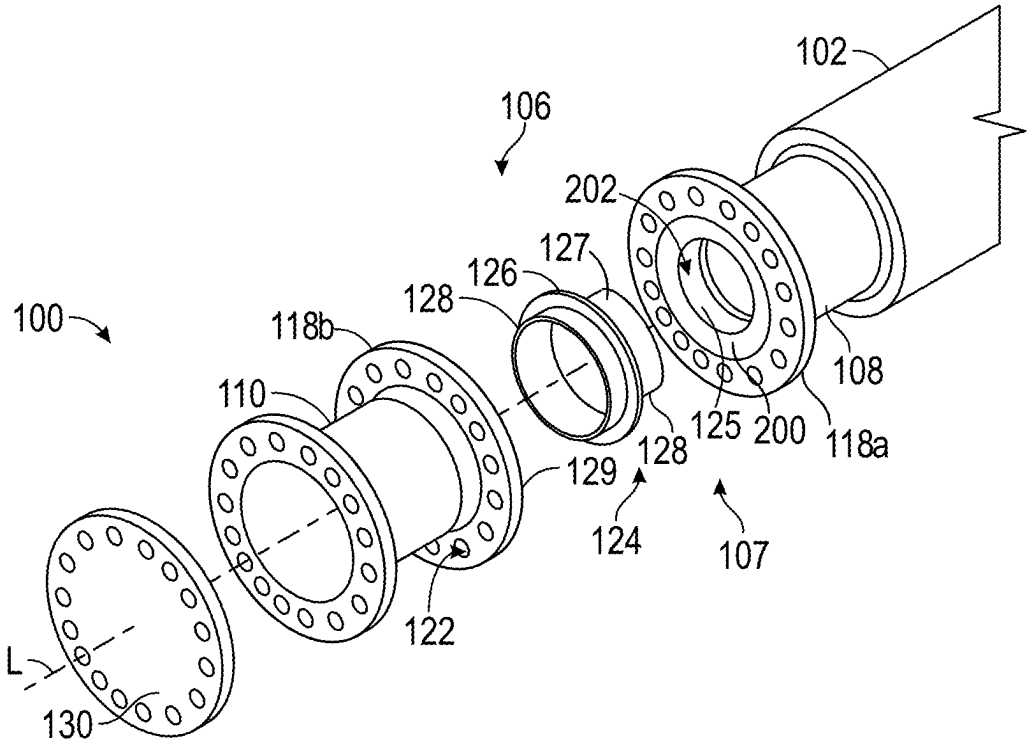
102
106
202
127
126
128
100
118b
108
110
125
200
118a
128
129
124
107
122
L
130

FIG. 1D

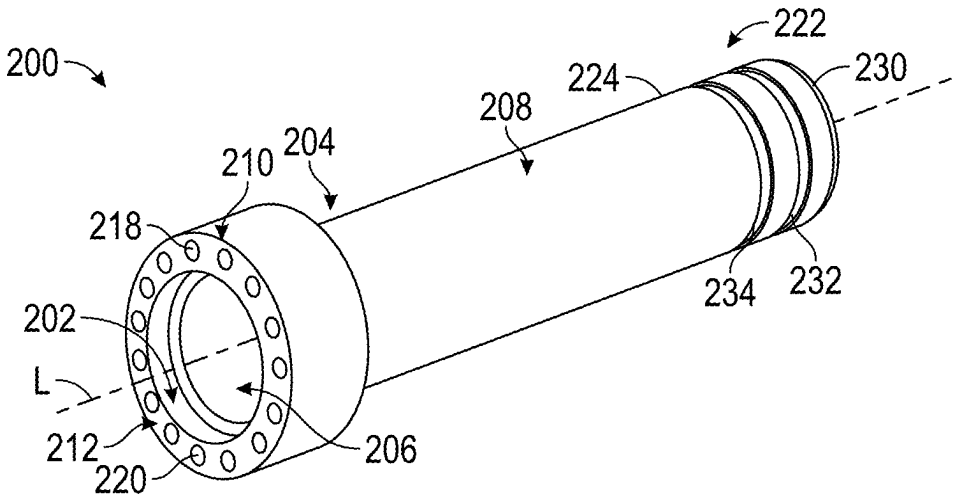

FIG. 2A

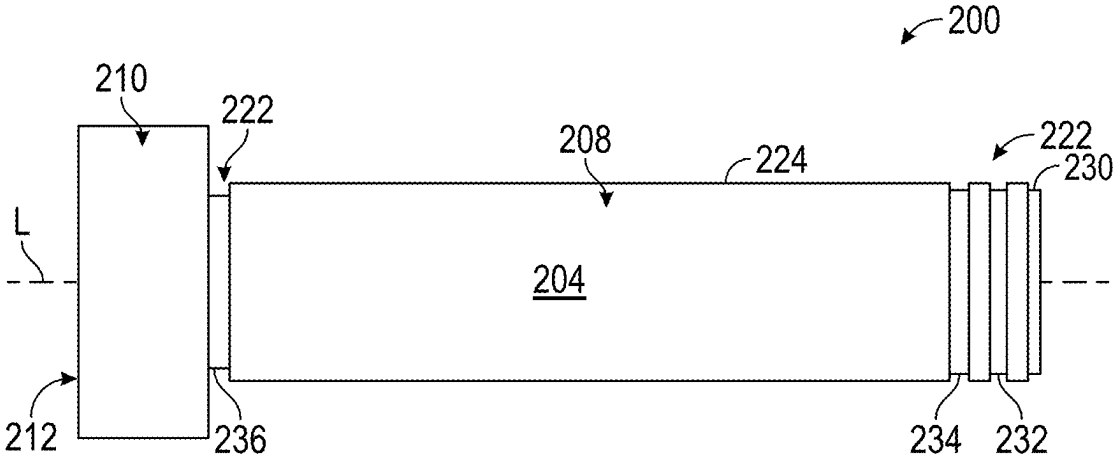

FIG. 2B

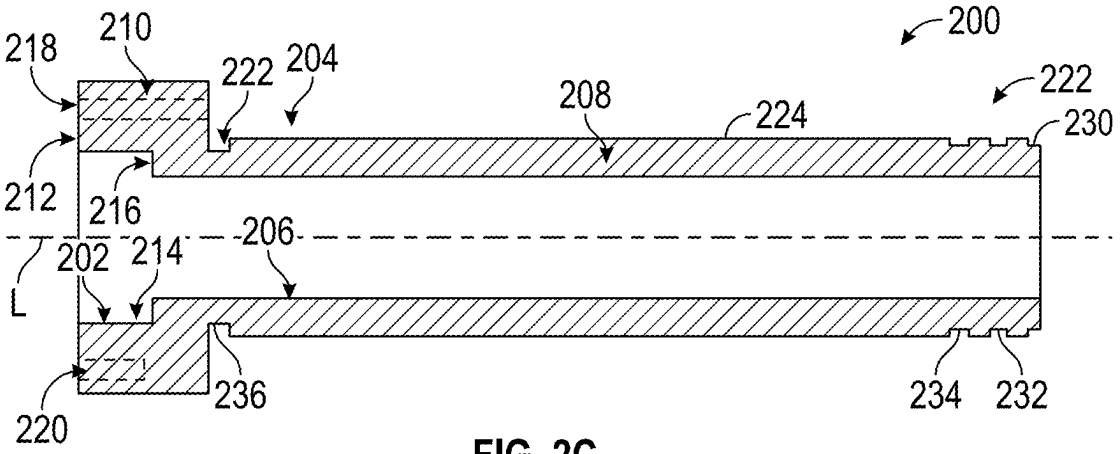

FIG. 2C

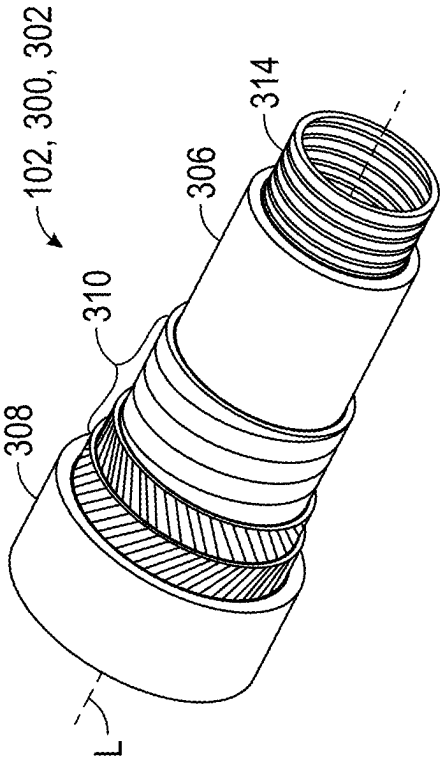

FIG. 3B

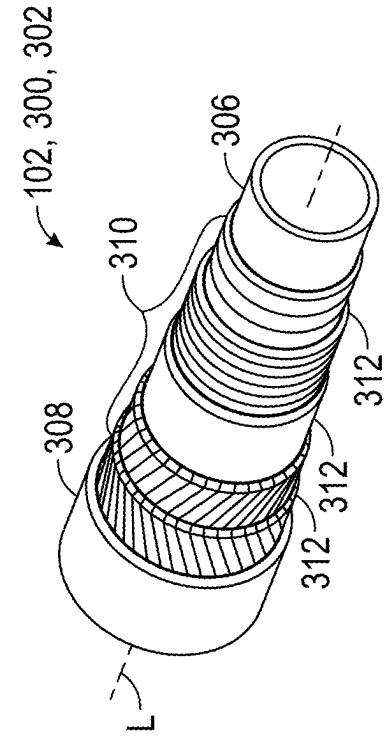

FIG. 3A

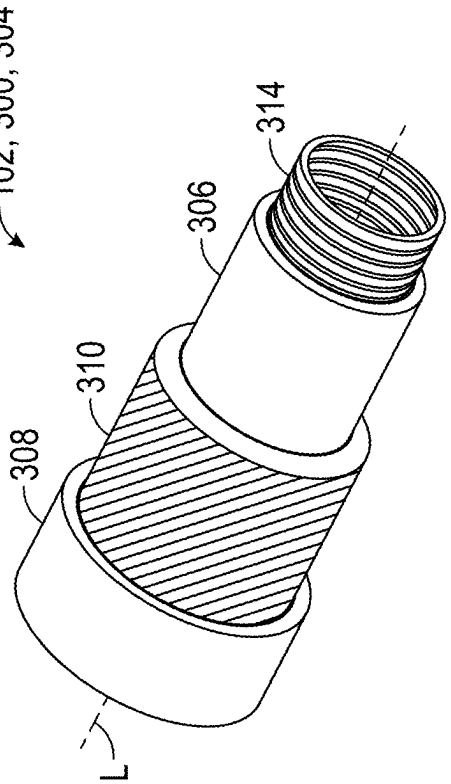

FIG. 3D

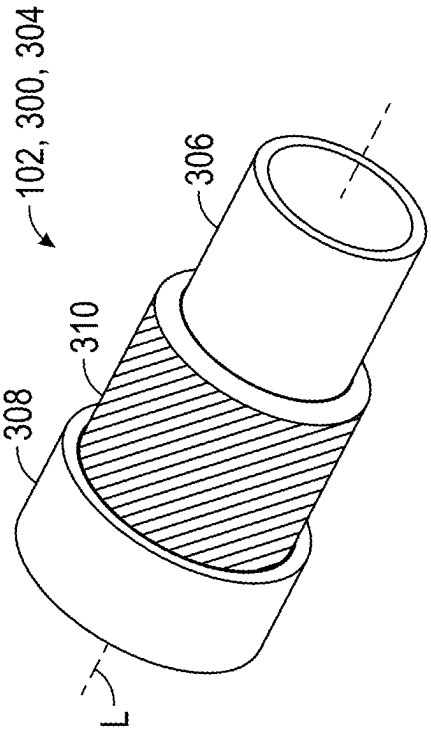

FIG. 3C

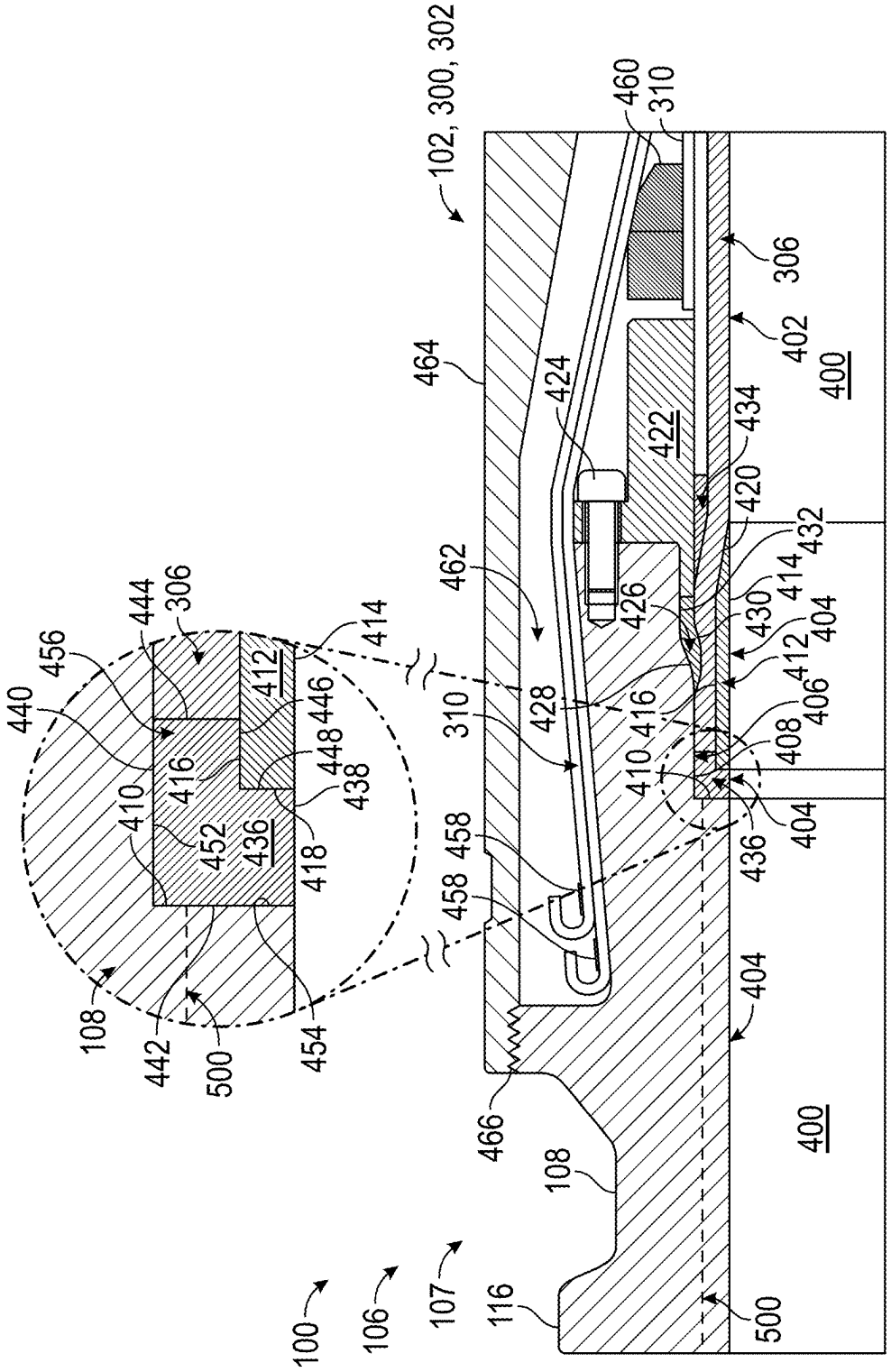
102, 300, 302
460
310
306
402
400
464
424
422
434
420
432
414
430
404
412
406
408
436
462
426
428
416
410
458
466
108
116
107
106
100
500
444
456
440
412
446
448
438
418
452
436
454
442
500

FIG. 4A

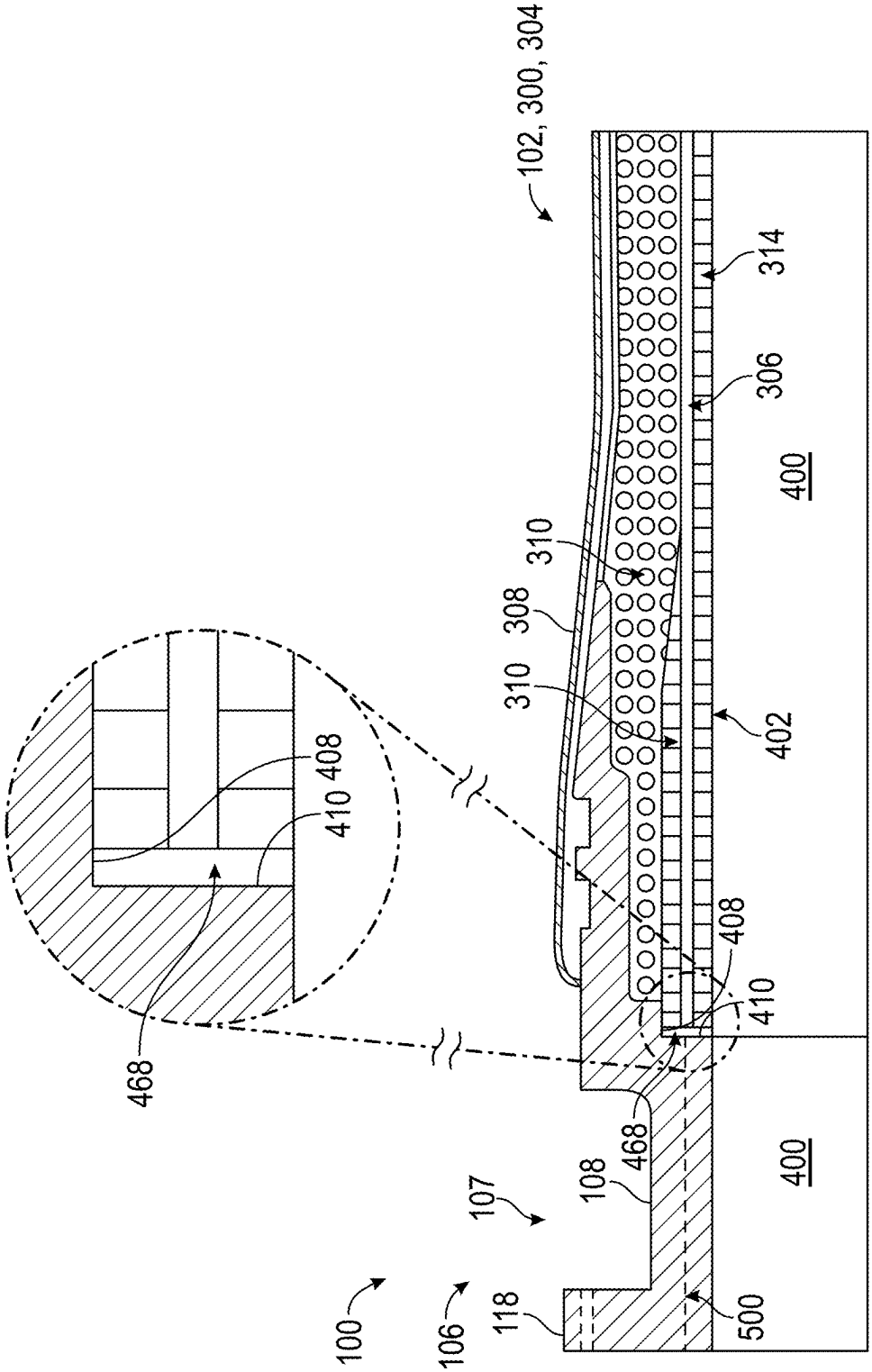
102, 300, 304
314
306
400
310
308
310
402
408
410
408
410
468
468
400
107
108
100
106
118
500

FIG. 4B

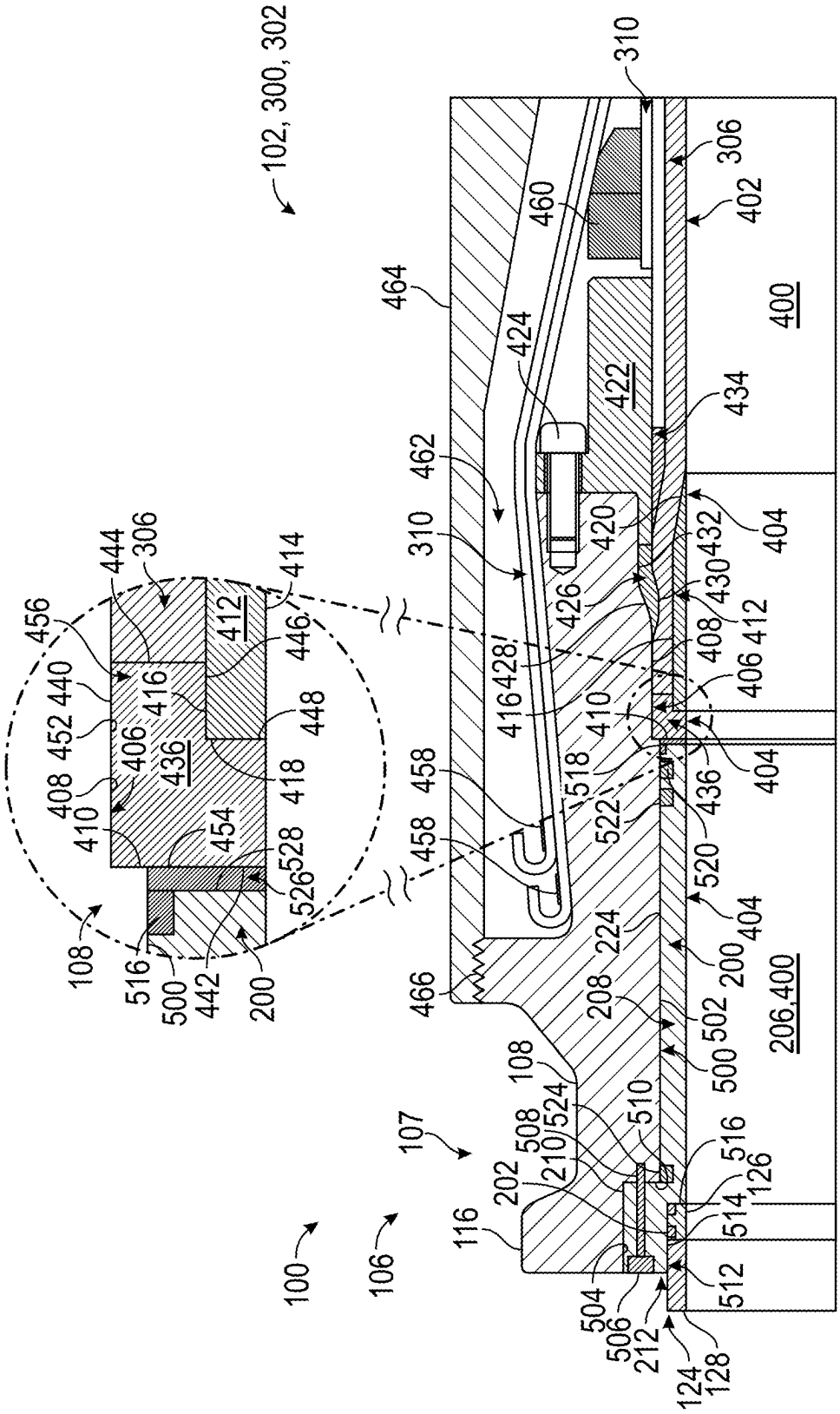
102, 300, 302
310
306
402
400
460
464
424
422
434
462
310
420
432
404
430
426
412
408
406
428
416
410
404
518
436
458
522
520
458
224
404
200
466
208
502
206,400
500
108
524
510
508
210
516
107
202
126
514
116
512
100
106
504
506
212
124
128
456
444
306
414
412
446
440
416
452
448
406
436
418
408
410
454
528
526
108
516
500
442
200

FIG. 5A

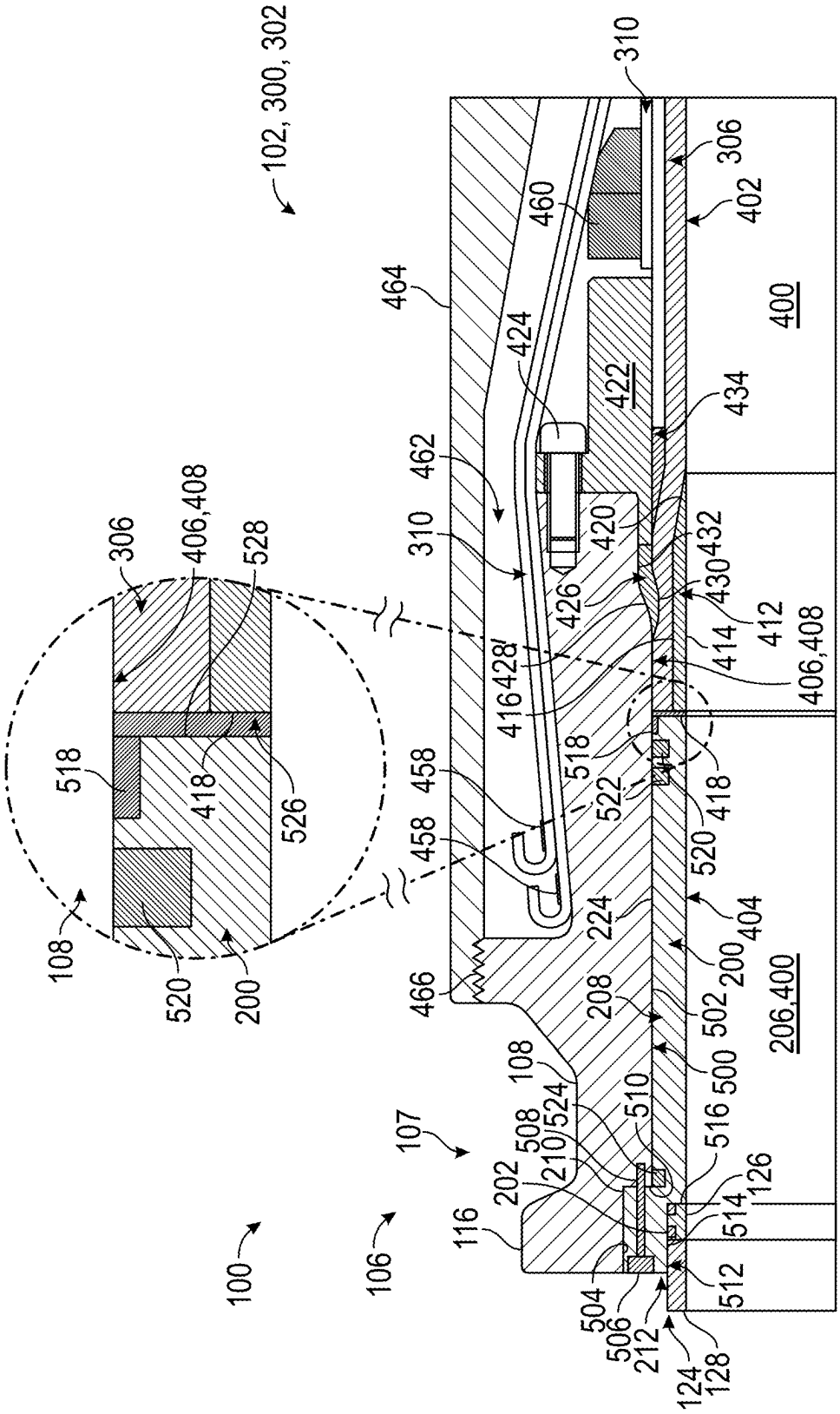
102, 300, 302
310
306
402
400
460
464
424
422
434
462
310
420
432
430
426
412
414
406,408
428
416
518
522
418
520
458
458
224
404
200
206,400
466
208
502
500
108
524
510
516
107
508
210
202
126
514
116
106
100
504
506
212
512
124
128
306
406,408
528
518
418
526
108
520
200

FIG. 5B

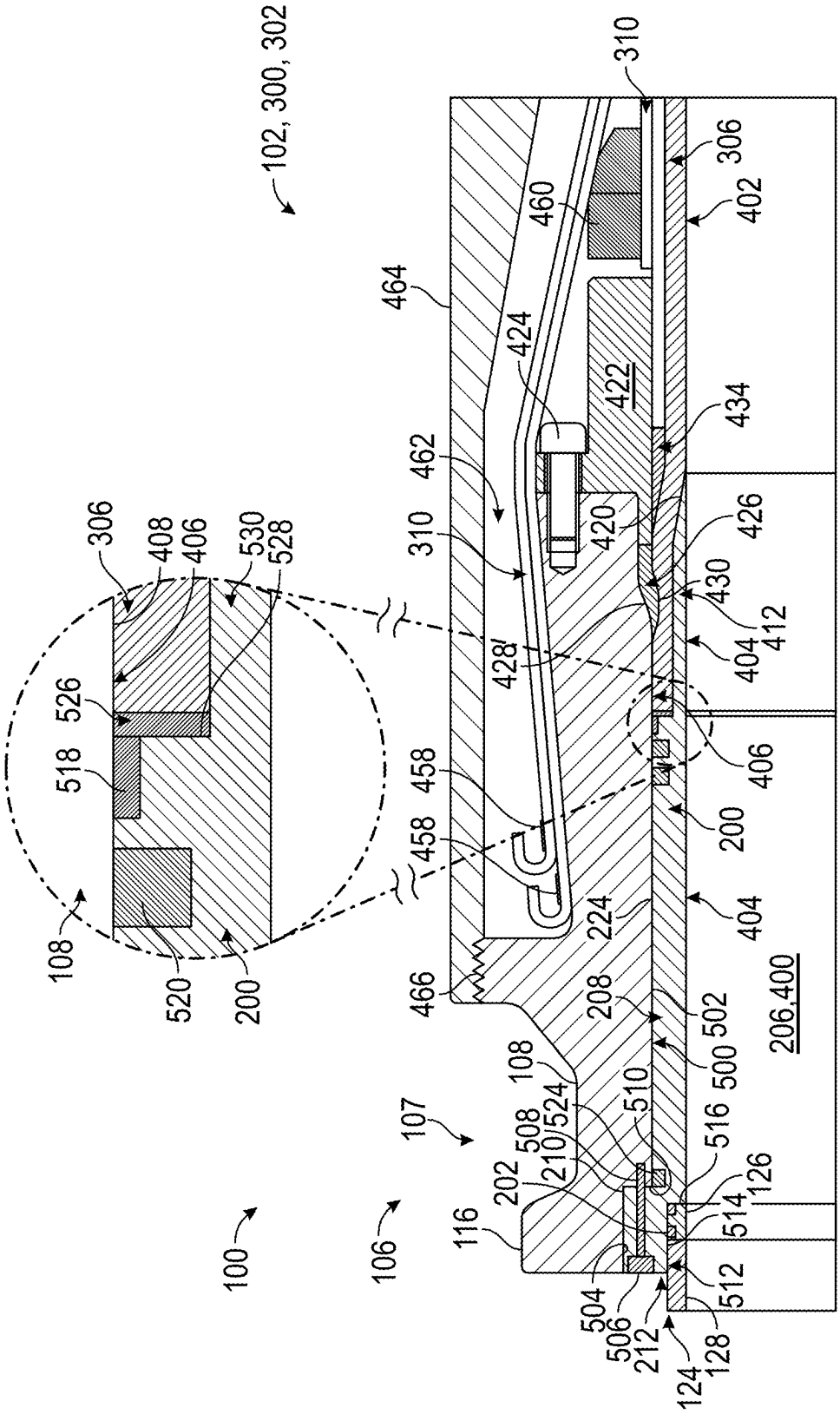
102, 300, 302
310
306
402
460
464
424
422
434
462
310
420
426
430
412
404
428
406
458
458
200
224
404
466
208
502
206,400
500
108
524
510
516
107
508
210
202
126
514
116
106
100
504
506
212
512
124
128
306
408
406
530
528
526
518
108
520
200

FIG. 5C

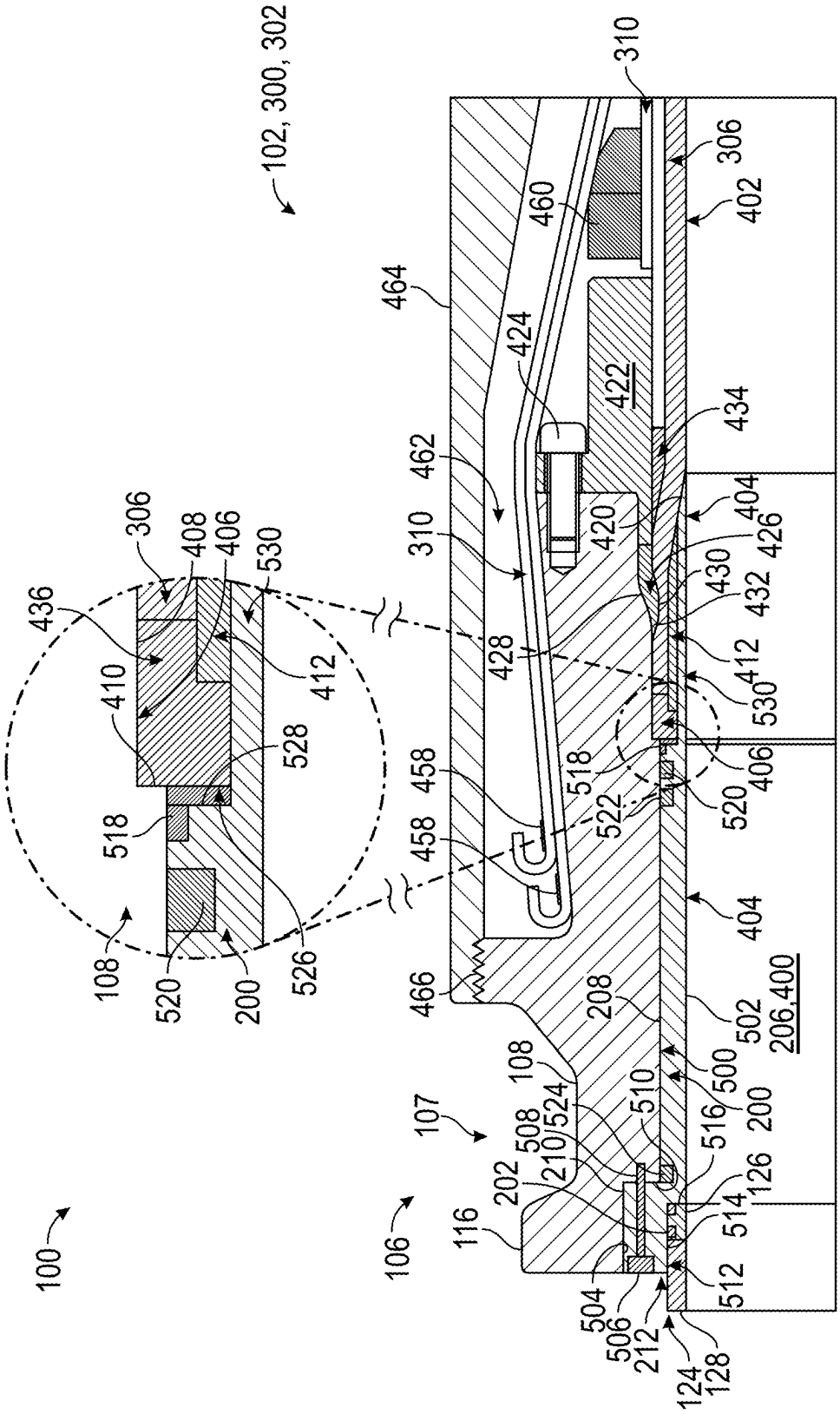
102, 300, 302
100
106
107
108
116
124
126
128
200
202
206,400
208
210
212
306
310
402
404
406
408
410
412
420
422
424
426
428
430
432
434
436
458
460
462
464
466
500
502
504
506
508
510
512
514
516
518
520
522
524
526
528
530

FIG. 5D

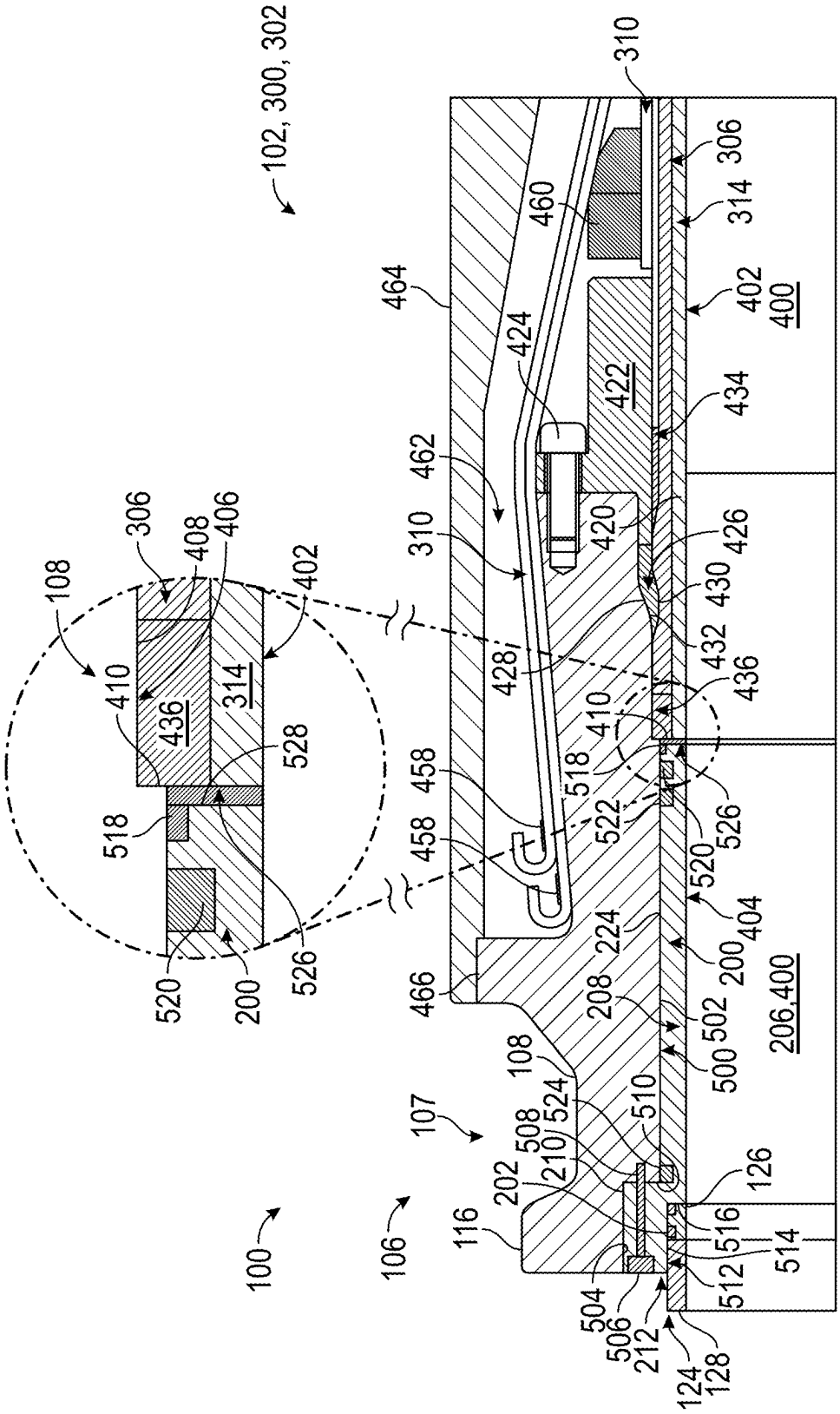
102, 300, 302
100
106
107
108
116
124
126
128
200
202
206,400
208
210
212
224
306
310
314
402
400
404
406
408
410
418
420
422
424
426
428
430
432
434
436
458
460
462
464
466
500
502
504
506
508
510
512
514
516
518
520
522
524
526
528

FIG. 5E

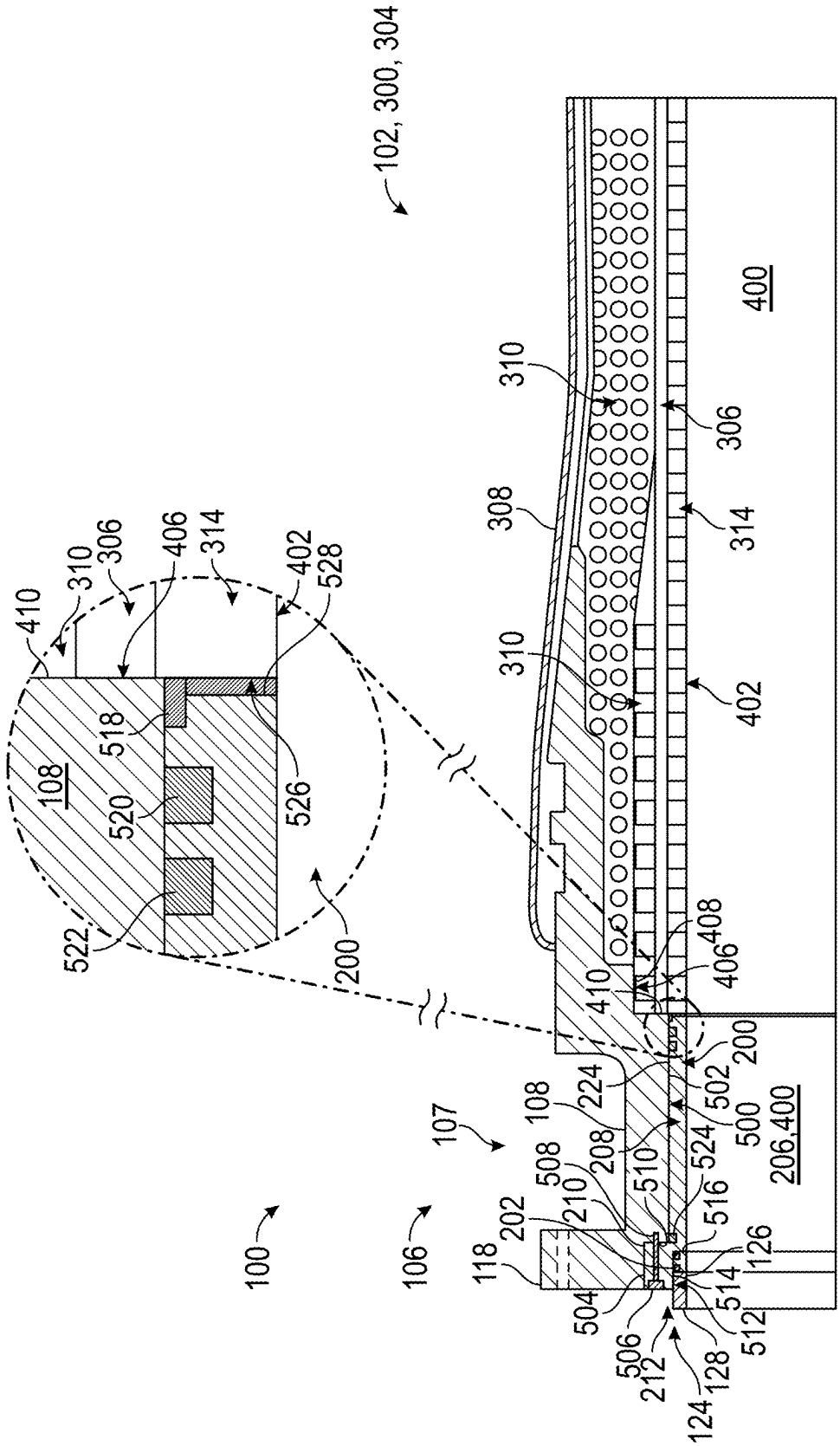
102, 300, 304
400
310
306
308
314
402
410
408
406
108
518
520
522
526
528
200
224
502
500
206,400
107
208
508
510
524
516
202
210
118
126
514
512
504
506
212
128
124
100
106

FIG. 5F

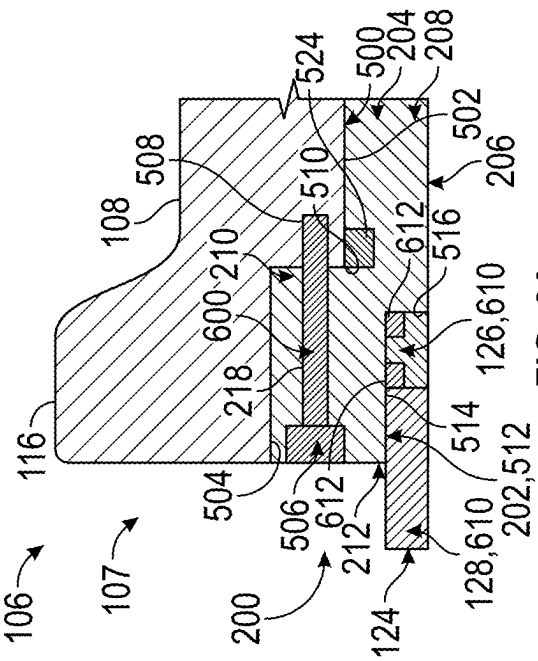

FIG. 6A

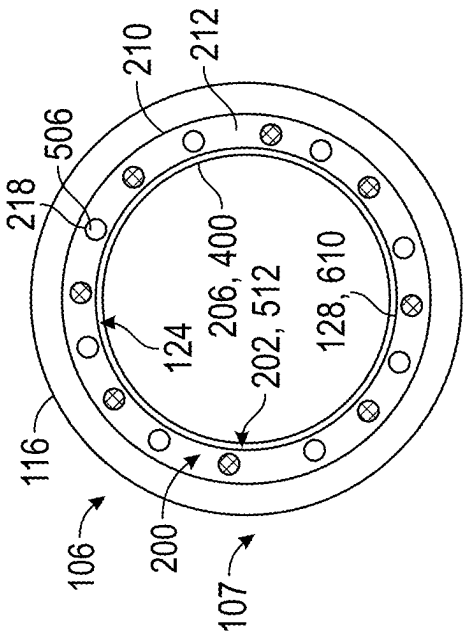

FIG. 6B

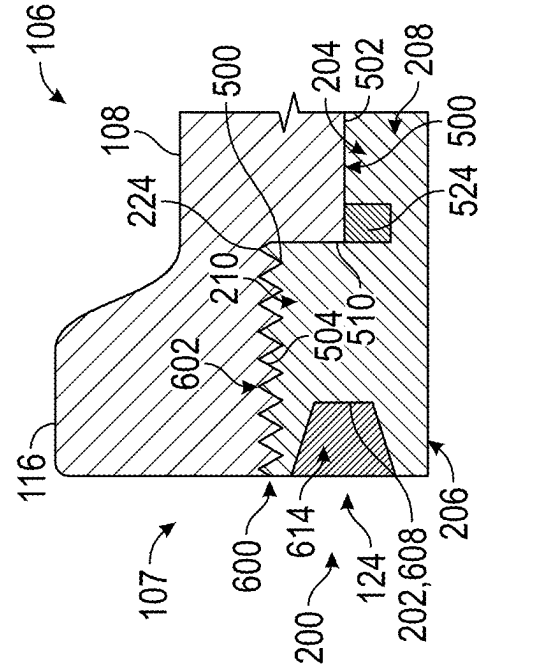

FIG. 6C

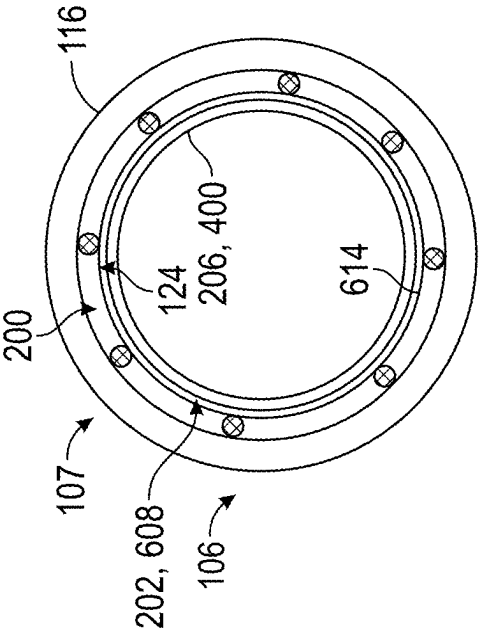

FIG. 6D

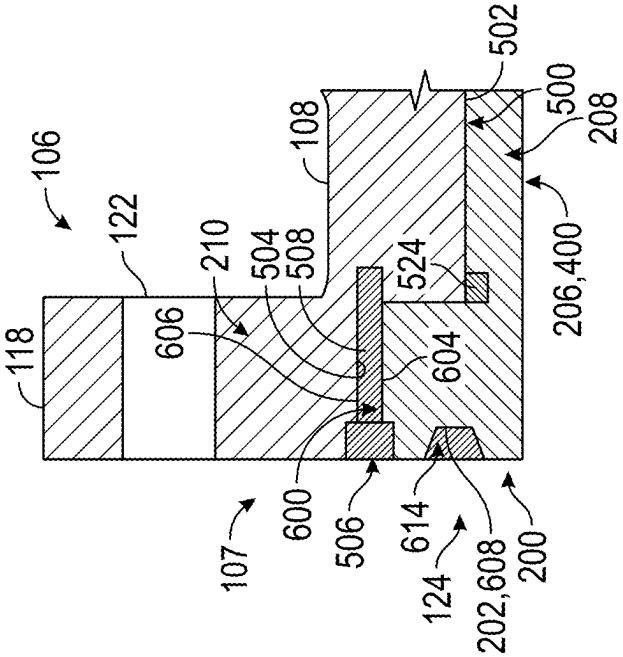

FIG. 6G

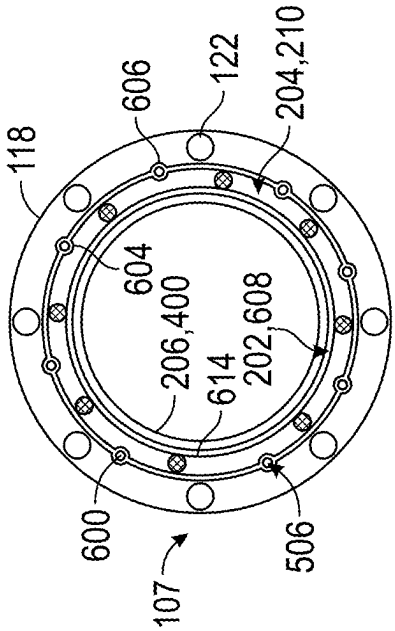

FIG. 6H

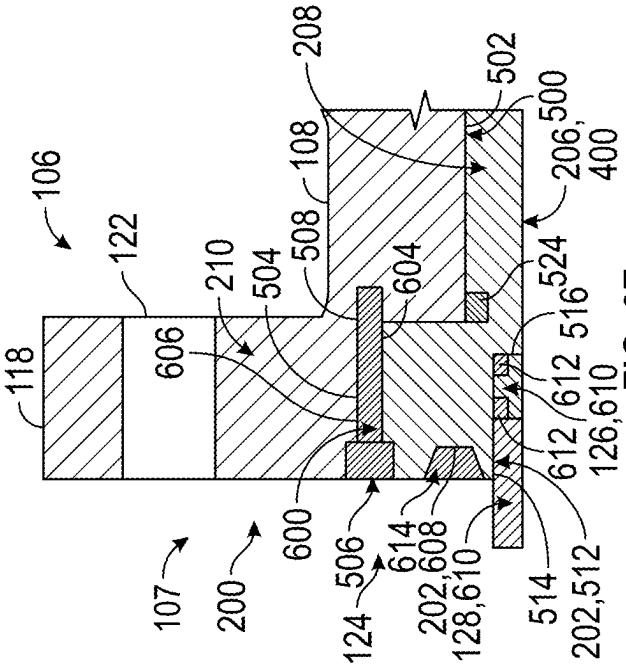

FIG. 6E

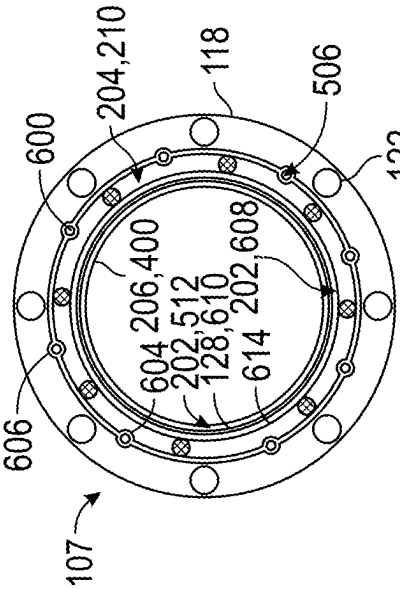

FIG. 6F

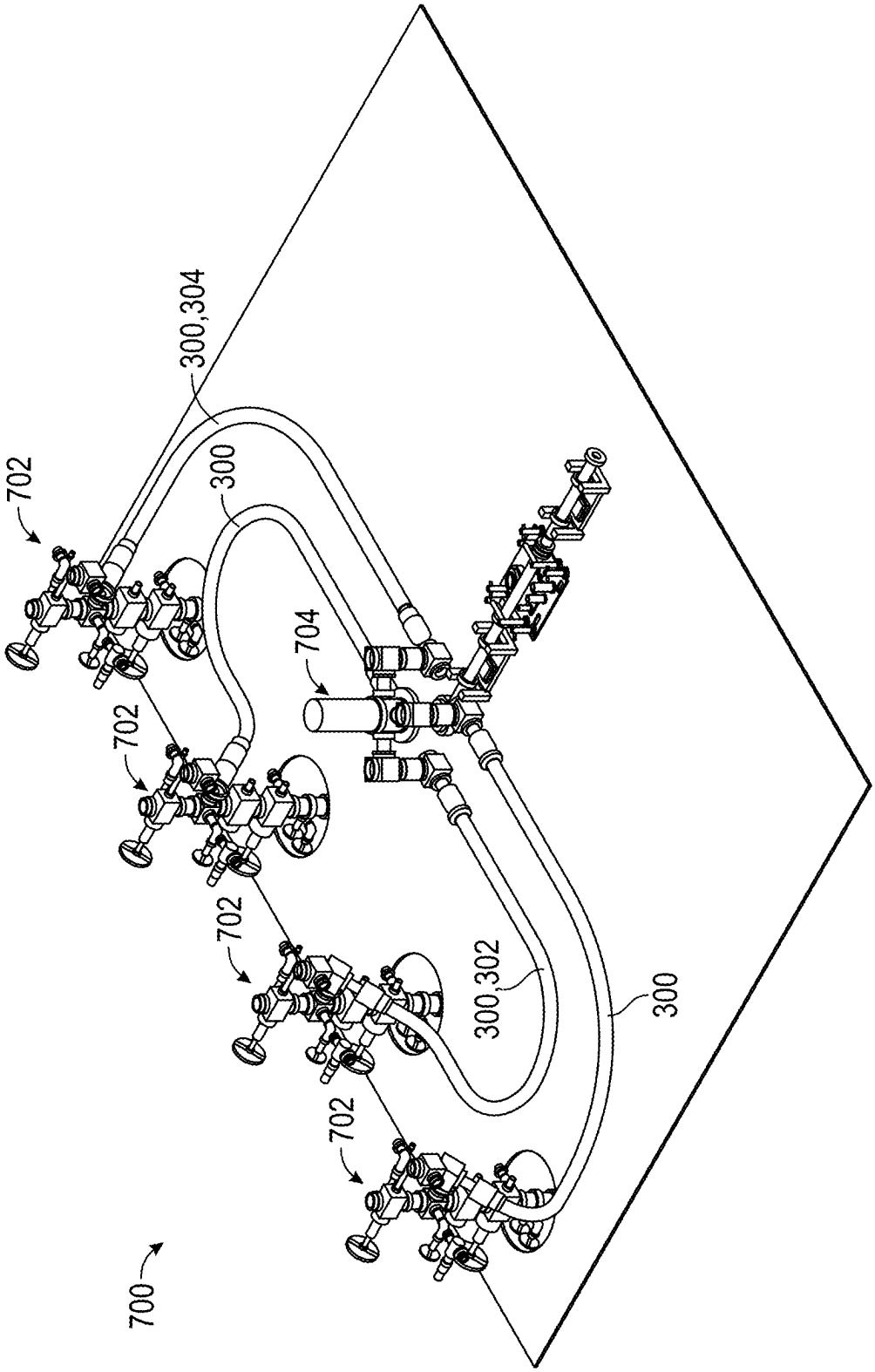

FIG. 7A

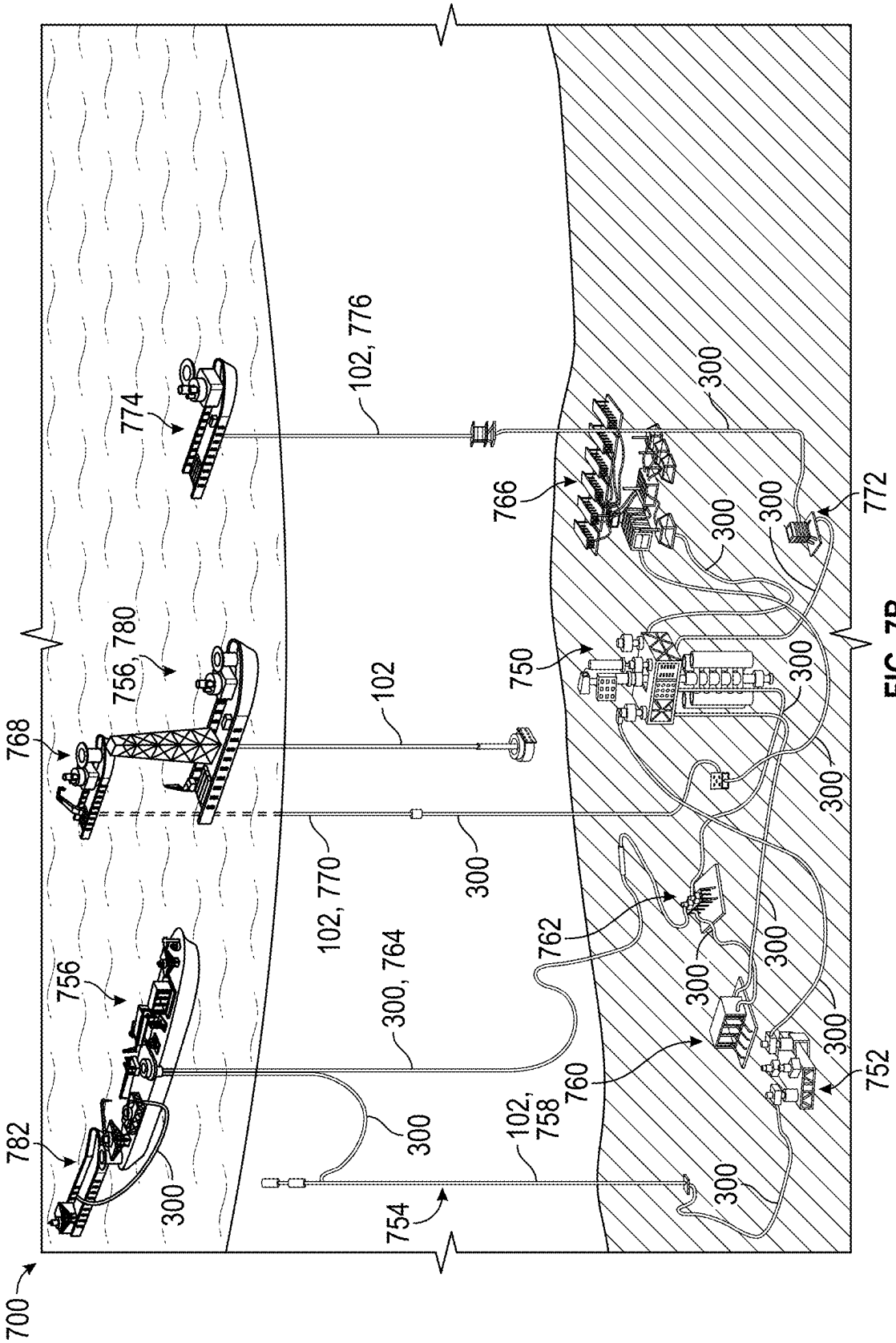
700
782
756
768
756, 780
774
102, 776
102
102, 770
300
300, 764
102, 758
754
760
762
750
766
772
752

FIG. 7B

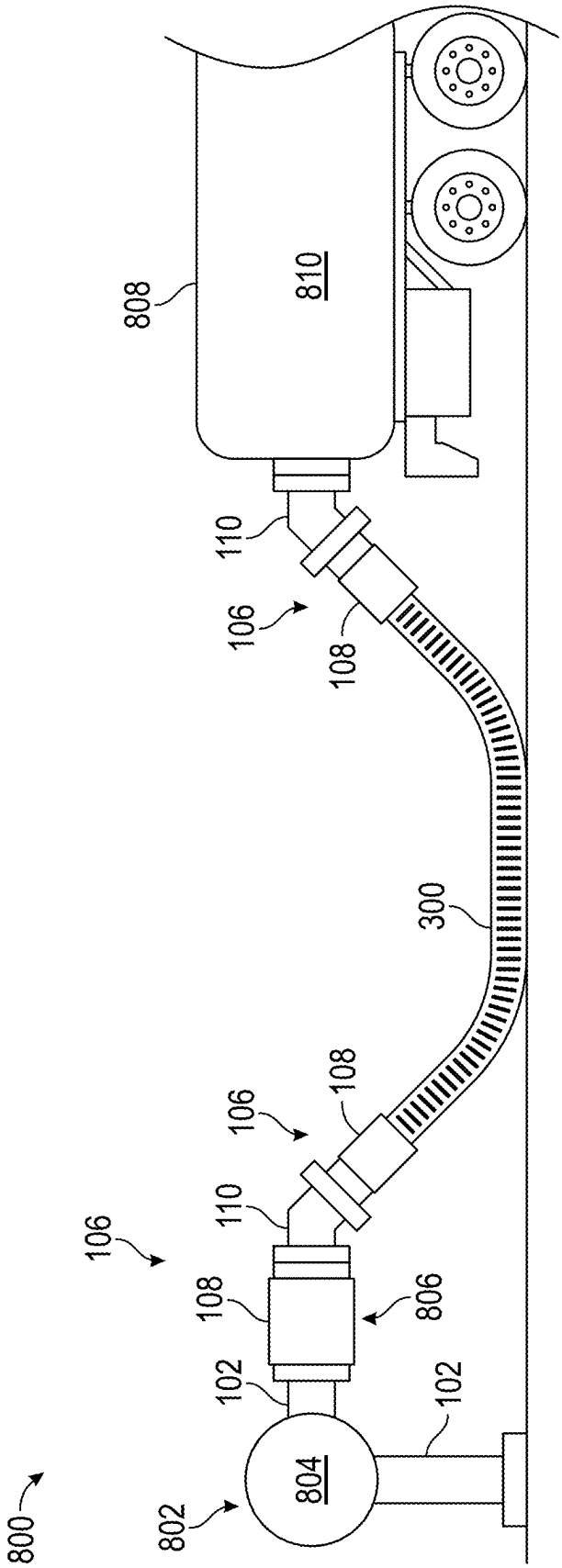
800
802
804
102
102
108
806
106
110
106
108
300
106
108
110
106
808
810

FIG. 8

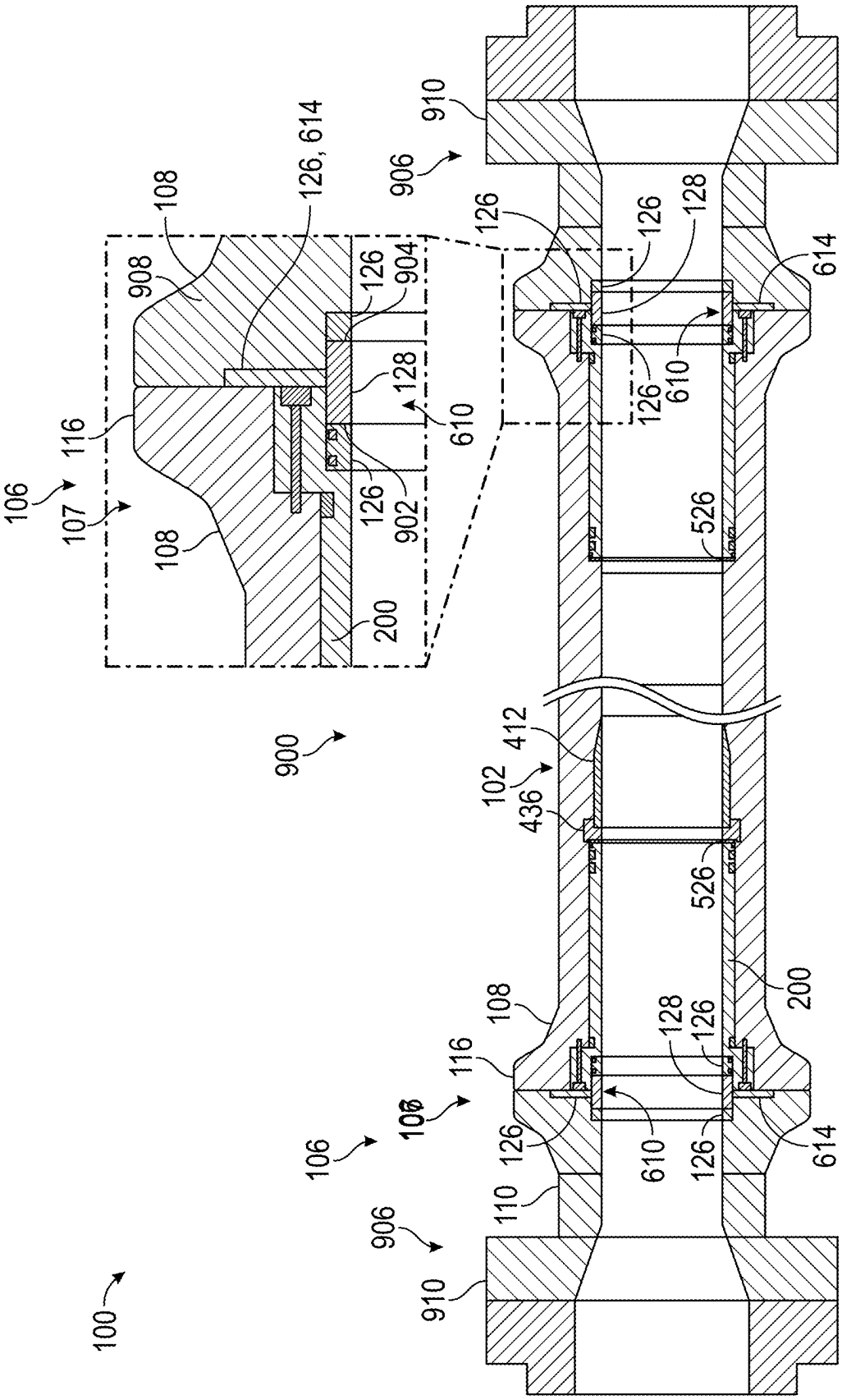
100
106
107
108
116
126, 614
908
126
904
128
610
126
902
200
900
910
906
126
126
128
614
610
126
526
412
102
436
526
200
108
116
106
106
126
128
126
610
126
614
110
906
910

FIG. 9

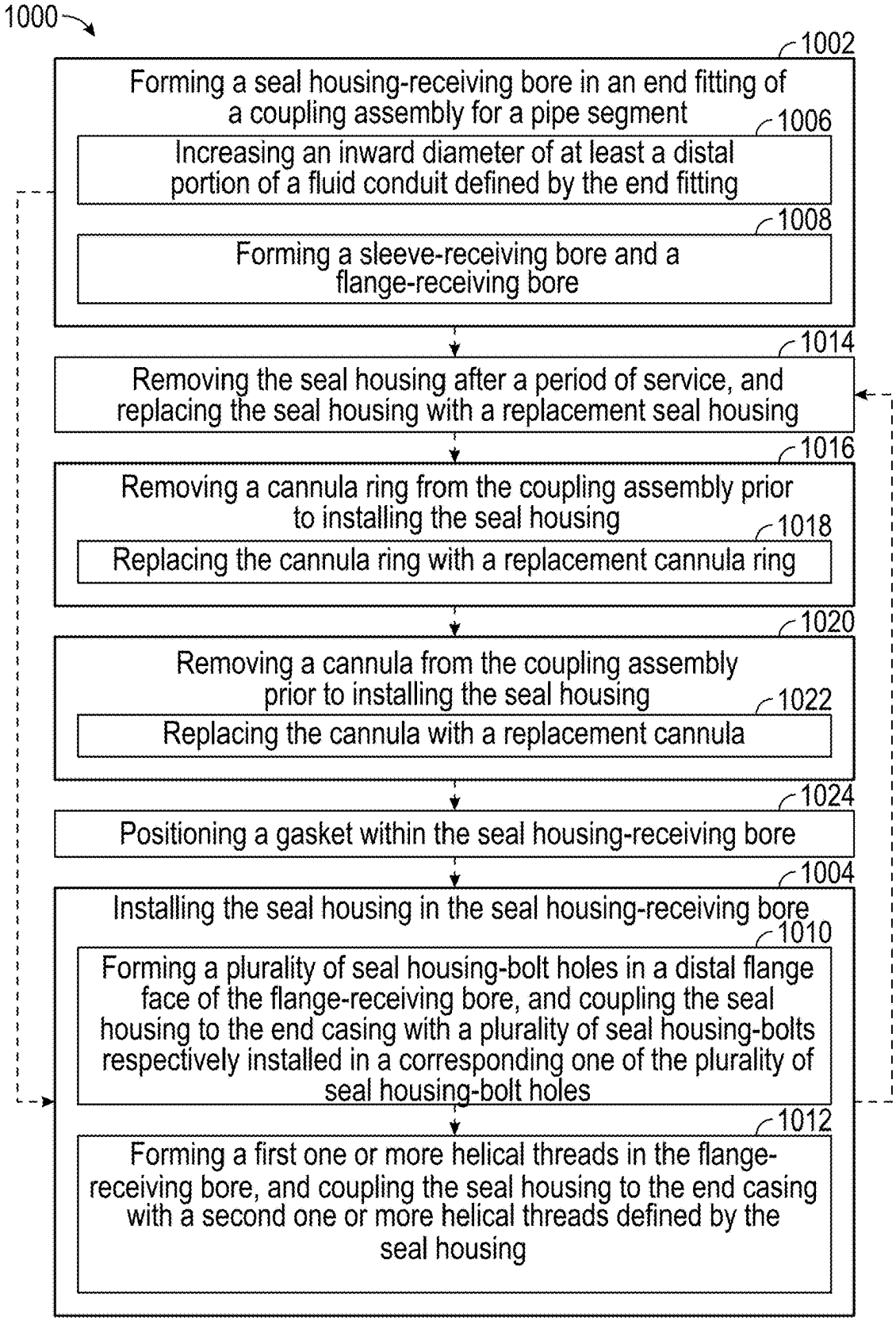
1000
1002
Forming a seal housing-receiving bore in an end fitting of a coupling assembly for a pipe segment
1006
Increasing an inward diameter of at least a distal portion of a fluid conduit defined by the end fitting
1008
Forming a sleeve-receiving bore and a flange-receiving bore
1014
Removing the seal housing after a period of service, and replacing the seal housing with a replacement seal housing
1016
Removing a cannula ring from the coupling assembly prior to installing the seal housing
1018
Replacing the cannula ring with a replacement cannula ring
1020
Removing a cannula from the coupling assembly prior to installing the seal housing
1022
Replacing the cannula with a replacement cannula
1024
Positioning a gasket within the seal housing-receiving bore
1004
Installing the seal housing in the seal housing-receiving bore
1010
Forming a plurality of seal housing-bolt holes in a distal flange face of the flange-receiving bore, and coupling the seal housing to the end casing with a plurality of seal housing-bolts respectively installed in a corresponding one of the plurality of seal housing-bolt holes
1012
Forming a first one or more helical threads in the flange-receiving bore, and coupling the seal housing to the end casing with a second one or more helical threads defined by the seal housing

FIG. 10A

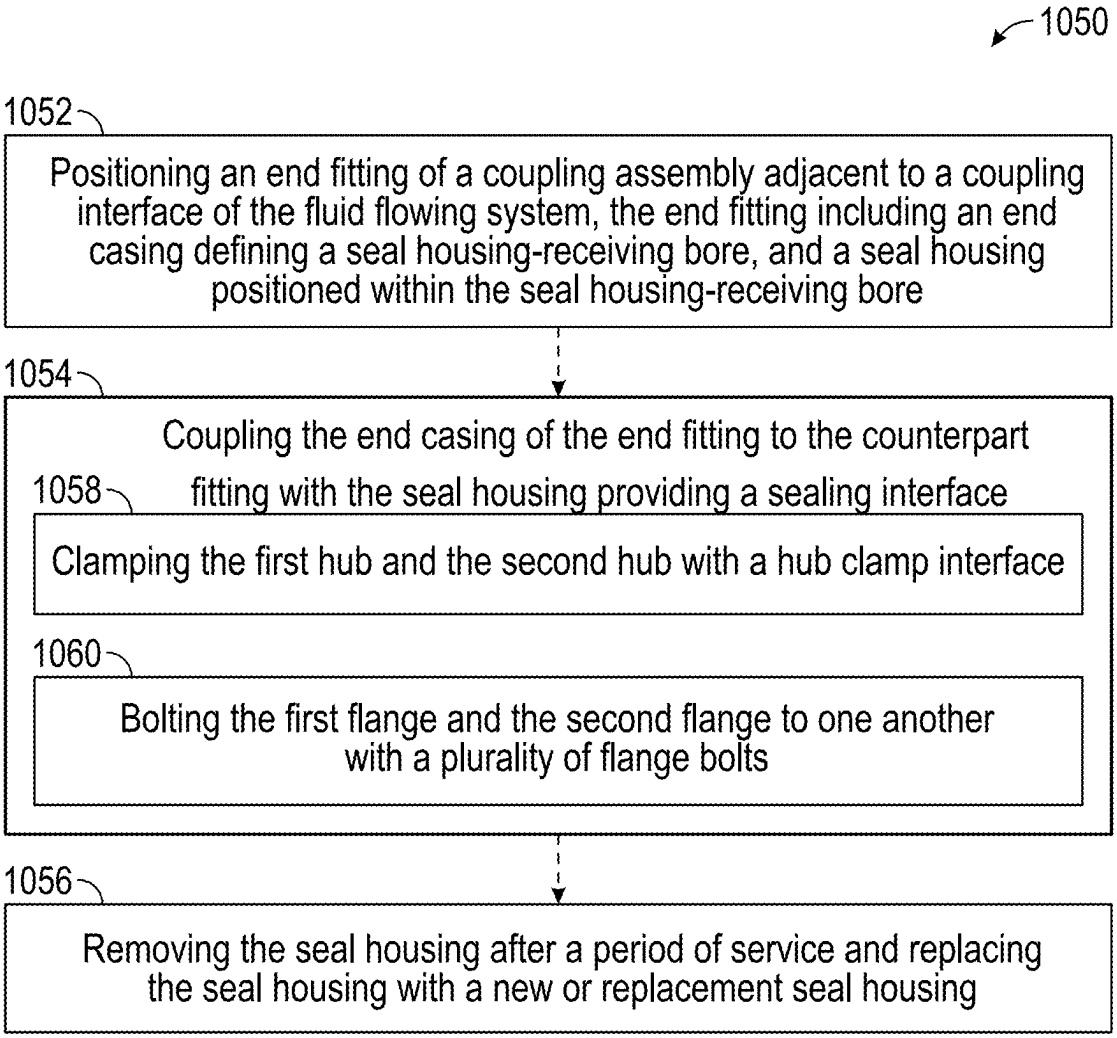
1050
1052
Positioning an end fitting of a coupling assembly adjacent to a coupling interface of the fluid flowing system, the end fitting including an end casing defining a seal housing-receiving bore, and a seal housing positioned within the seal housing-receiving bore
1054
Coupling the end casing of the end fitting to the counterpart fitting with the seal housing providing a sealing interface
1058
Clamping the first hub and the second hub with a hub clamp interface
1060
Bolting the first flange and the second flange to one another with a plurality of flange bolts
1056
Removing the seal housing after a period of service and replacing the seal housing with a new or replacement seal housing

FIG. 10B

END FITTINGS FOR FLEXIBLE PIPE SEGMENTS

CROSS-REFERENCE TO RELATED APPLICATIONS

[0001] This patent application is a continuation application claiming priority benefit, with regard to all common subject matter, of U.S. patent application Ser. No. 17/964,606, filed Oct. 12, 2022, and entitled "END FITTINGS FOR FLEXIBLE PIPE SEGMENTS." The above-referenced application is hereby incorporated by reference in its entirety into the present application.

FIELD

[0002] The present disclosure generally pertains to pipe assemblies for flowing a fluid. The pipe assemblies may include one or more pipe segments, such as bonded or unbonded flexible pipe segments. The present disclosure further pertains to end fittings for pipe segments, as well as methods of coupling an end fitting to a pipe segments, and methods of coupling a pipe segment to a fluid flowing system.

BACKGROUND

[0003] A pipe assembly may include one or more pipe segments that may be coupled to one another and/or to a counterpart fitting by way of a coupling assembly. The coupling assembly or the pipe segment may be susceptive to wear that can limit the useful life of the pipe segment. The wear may be attributable, for example, to corrosion and/or abrasion from fluids and/or impurities flowing through the pipe segment. It is desirable to increase or prolong the useful of pipe segments, including by reducing wear from fluids and/or impurities flowing through the pipe segments.

SUMMARY

[0004] Aspects, features, and advantages of the presently disclosed subject matter are set forth in part in the following description. Further aspects and advantages may be apparent from the description or through practicing the presently disclosed subject matter.

[0005] In one aspect, the present disclosure provides end fittings for flexible pipe segments. An end fitting may include an end casing that is permanently couplable to an end of a flexible pipe segment, and a seal housing that is removably couplable to the end casing. The end casing may define a seal housing-receiving bore extending longitudinally through the end casing, and the seal housing may be positioned within the seal housing-receiving bore. The seal housing may define at least one seal bore extending from an axially distal surface of the seal housing.

[0006] In another aspect, the present disclosure provides pipe assemblies for flowing a fluid. A pipe assembly may include a pipe segment; and at least one end fitting respectively coupled to an end of the pipe segment. The at least one end fitting may include an end casing coupled to the end of the pipe segment and a seal housing removably coupled to the end casing. The end casing may define a seal housing-receiving bore extending longitudinally through the end casing, and the seal housing may be positioned within the seal housing-receiving bore. The seal housing may define at least one seal bore extending from an axially distal surface of the seal housing, and one or more sealing elements may be seated in a respective one of the at least one seal bore. The respective end fitting may be couplable to a counterpart fitting, and the seal housing and/or the one or more sealing elements may be configured to define a sealing interface with the counterpart fitting.

[0007] In some embodiments, the seal housing may include a sleeve portion and a flange portion, and the seal housing may be replaceably coupled to the end casing at least in part by a plurality of seal housing-bolts respectively installed in a corresponding one of a plurality of seal housing-bolt holes extending longitudinally through the flange portion of the replaceable seal housing. In yet another aspect, the present disclosure provides methods of installing a seal housing in an end fitting of a pipe assembly. An example method may include forming a seal housing-receiving bore in an end fitting of a coupling assembly for a pipe segment, with the seal housing-receiving bore extending longitudinally through the end fitting, and installing a seal housing in the seal housing-receiving bore, in which the seal housing defines at least one seal bore extending from an axially distal surface of the seal housing.

[0008] These and other aspects, features, and advantages thereof are further understood with reference to the following description, the accompanying drawing figures, and the appended claims. The foregoing summary is not intended to identify key features or essential features of the claimed subject matter, nor is it intended to limit the scope of the claimed subject matter.

BRIEF DESCRIPTION OF THE DRAWING FIGURES

[0009] Embodiments of the present are described in detail below with reference to the attached drawing figures, wherein:

[0010] FIG. **1**A schematically depicts a perspective view of one example of a pipe assembly that includes at least one pipe segment that may be utilized in connection with a fluid flowing system;

[0011] FIG. **1**B schematically depicts a perspective view of another example of a pipe assembly that includes at least one pipe segment that may be utilized in connection with a fluid flowing system;

[0012] FIG. **1**C schematically depicts an exploded view of one example of a coupling assembly that includes an end fitting coupled to a pipe segment;

[0013] FIG. **1**D schematically depicts an exploded view of another example of a coupling assembly that includes an end fitting coupled to a pipe segment;

[0014] FIG. **2**A schematically depicts a perspective view of one example of a seal housing or removable portion of an end fitting;

[0015] FIG. **2**B schematically depicts a side view of the seal housing or removable portion of the end fitting shown in FIG. **2**A;

[0016] FIG. **2**C schematically depicts a cross-sectional view of the seal housing or removable portion of the end fitting shown in FIGS. **2**A and **2**B;

[0017] FIG. **3**A schematically depicts a perspective cutaway view of one example of an unbonded flexible pipe segment;

[0018] FIG. **3**B schematically depicts a perspective cutaway view of another example of an unbonded flexible pipe segment;

[0019] FIG. **3**C schematically depicts a perspective cutaway view of one example of a bonded flexible pipe segment;

[0020] FIG. **3**D schematically depicts a perspective cutaway view of another example of a bonded flexible pipe segment;

[0021] FIG. **4**A schematically depicts a partial cross-sectional view of one example of an end fitting permanently coupled to an unbonded flexible pipe segment;

[0022] FIG. **4**B schematically depicts a partial cross-sectional view of one example of an end fitting permanently coupled to a bonded flexible pipe segment;

[0023] FIG. **5**A schematically depicts a partial cross-sectional view of one example of a smooth bore, unbonded flexible pipe segment that includes an end fitting with an end casing permanently coupled to an end of the pipe segment and a seal housing removably coupled to the end casing;

[0024] FIG. **5**B schematically depicts a partial cross-sectional view of another example of a smooth bore, unbonded flexible pipe segment that includes an end fitting with an end casing permanently coupled to an end of the pipe segment and a seal housing removably coupled to the end casing;

[0025] FIG. **5**C schematically depicts a partial cross-sectional view of yet another example of a smooth bore, unbonded flexible pipe segment that includes an end fitting with an end casing permanently coupled to an end of the pipe segment and a seal housing removably coupled to the end casing;

[0026] FIG. **5**D schematically depicts a partial cross-sectional view of yet another example of a smooth bore, unbonded flexible pipe segment that includes an end fitting with an end casing permanently coupled to an end of the pipe segment and a seal housing removably coupled to the end casing;

[0027] FIG. **5**E schematically depicts a partial cross-sectional view of one example of a rough bore, unbonded flexible pipe segment that includes an end fitting with an end casing permanently coupled to an end of the pipe segment and a seal housing removably coupled to the end casing;

[0028] FIG. **5**F schematically depicts a partial cross-sectional view of one example of a bonded flexible pipe segment that includes an end fitting with an end casing permanently coupled to an end of the pipe segment and a seal housing removably coupled to the end casing;

[0029] FIG. **6**A schematically depicts a partial cross-sectional view of one example of an end fitting that includes a seal housing removably coupled to an end casing;

[0030] FIG. **6**B schematically depicts facing view of the end fitting shown in FIG. **6**A;

[0031] FIG. **6**C schematically depicts a partial cross-sectional view of another example of an end fitting that includes a seal housing removably coupled to an end casing;

[0032] FIG. **6**D schematically depicts facing view of the end fitting shown in FIG. **6**C;

[0033] FIG. **6**E schematically depicts a partial cross-sectional view of yet another example of an end fitting that includes a seal housing removably coupled to an end casing;

[0034] FIG. **6**F schematically depicts facing view of the end fitting shown in FIG. **6**E;

[0035] FIG. **6**G schematically depicts a partial cross-sectional view of yet another example of an end fitting that includes a seal housing removably coupled to an end casing;

[0036] FIG. **6**H schematically depicts facing view of the end fitting shown in FIG. **6**G;

[0037] FIG. **7**A schematically depicts a perspective view of one example of a fluid flowing system in connection with a petroleum extraction station;

[0038] FIG. **7**B schematically depicts a perspective view of another example of a fluid flowing system in connection with a petroleum extraction station;

[0039] FIG. **8** schematically depicts a side view of one example of a fluid flowing system in connection with a fluid transfer station;

[0040] FIG. **9** schematically depicts a cross-sectional view of one example of a pipe assembly that may be utilized in connection with a fluid flowing system;

[0041] FIG. **10**A shows a flowchart depicting one example of a method of installing a seal housing in an end casing; and

[0042] FIG. **10**B shows a flowchart depicting one example of a method of coupling a pipe assembly to a fluid flowing system.

[0043] The drawing figures illustrate example embodiments of the presently disclosed subject matter. The claims are not limited to the example embodiments depicted in the drawing figures. The aspects and features depicted in the drawing figures are not necessarily to scale. Repeat use of reference characters in the specification and drawing figures represent the same or analogous aspects or features.

DETAILED DESCRIPTION

[0044] The following detailed description references the accompanying drawing figures that illustrate example embodiments of the presently disclosed subject matter. The present disclosure, including the example embodiments depicted in the drawing figures, describe features, aspects, and advantages of the of the disclosed subject matter by way of explanation and not limitation. Various modifications, combinations, and variations can be made to the example embodiments or to aspects or features thereof without departing from the scope of the presently disclosed subject matter. Thus, the present disclosure encompasses such modifications, combinations, and variations. The present disclosure provides sufficient detail to enable those skilled in the art to practice the claimed subject matter. The present disclosure is, therefore, not to be taken in a limiting sense. The scope of the invention is defined only by the appended claims, along with the full scope of equivalents to which such claims are entitled.

[0045] In this description, references to "one embodiment," "an embodiment," or "embodiments" mean that the feature or features referred to are included in at least one embodiment of the presently disclosed subject matter. Separate references to "one embodiment," "an embodiment," or "embodiments" in this description do not necessarily refer to the same embodiment and are also not mutually exclusive unless so stated and/or except as will be readily apparent to those skilled in the art from the description. For example, a feature, structure, act, etc. described in one embodiment may also be included in other embodiments but is not necessarily included. Thus, the scope of the presently disclosed subject matter encompasses a variety of combinations and/or integrations of the example embodiments in this description.

[0046] The terms "a," "an," and "the" do not denote a limitation of quantity but rather denote the presence of at least one of the referenced item. The terms "first," "second," "third," and so forth may be used interchangeably to distinguish one item from another and are not intended to signify location or importance of the respective item. Range limi-

tations in this description and in the claims include all endpoints, and all such endpoints are independently combinable to provide another range limitation.

[0047] The term "coupled," when used herein with reference to at least two objects, refers to direct or indirect mechanical or physical contact between two objects in which the two objects are linked, connected, fastened, or joined with one another, including by way of one or more fastening elements or hardware, an interference fit, a shrink fit, by crimping, by an adhesive, by bonding, by molding, by welding, or the like. The term "coupled" includes objects that are removably coupled with one another as well as objects that are permanently coupled to one another.

[0048] The term "removably coupled," when used herein with reference to at least two objects, indicates that the objects are configured to be decoupled from one another as an intended feature of the manner in which the objects are coupled to one another. Under normal circumstances, removably coupled objects can be decoupled from one another without causing damage or destruction to the respective objects. By way of example, and without limitation, at least two objects may be removably coupled to one another by one or more fastening elements or hardware, an interference fit, a shrink fit, or the like, as well as combinations of these.

[0049] The term "permanently coupled," when used herein with reference to at least two objects, indicates that the objects are configured to remain coupled to the second object indefinitely as an intended feature of the manner in which the objects are coupled to one another. Separation of permanently coupled objects normally causes damage or destruction to at least one of the objects or to the means used to couple the objects to one another. By way of example, and without limitation, at least two objects may be permanently coupled to one another by crimping, by an adhesive, by bonding, by molding, by welding, or the like, as well as combinations of these.

[0050] The term "integral" or "integrally formed," when used herein with reference to at least to elements, refers to two elements that respectively define a portion, part, or piece of one and the same object. The term "integral" includes a portion, part, or piece of an element that cannot be separated from the whole of the element without destructive means. For example, the term "integral" may refer to objects that are formed or cast as a single unit, as well as portions, parts, or pieces of a single, monolithic object.

[0051] The present disclosure is generally directed to pipe assemblies for flowing a fluid, such as a fluid associated with a petroleum extraction station or a fluid transfer station. The pipe assemblies may include one or more pipe segments that may be coupled to one another and/or to a counterpart fitting of a fluid flowing system by way of a coupling assembly. The coupling assembly may include an end fitting that has a fixed portion and a removable portion that work in cooperation with one another to fluidically seal a fluid plenum and/or flow path defined by the coupling assembly. The fixed portion of the end fitting is referred to herein as an "end casing." The removable portion of the end fitting is referred to herein as a "seal housing." The end casing may be coupled, such as permanently coupled, to the pipe segment, and the seal housing may be removably coupled to the end casing. The end casing may provide the coupling function of the coupling assembly, while the seal housing may provide the sealing function of the coupling assembly.

[0052] The end casing may define a seal housing-receiving bore, and the seal housing may be positioned within the seal housing-receiving bore of the end casing. The seal housing (e.g., the removable portion of the end fitting) may include one or more sealing interfaces that interact with adjacent componentry to fluidically seal the fluid plenum and/or flow path defined by the coupling assembly. The end casing (e.g., the fixed portion of the end fitting) may be configured to secure the end fitting to the counterpart fitting. The end casing may impart a force upon the sealing interfaces provided by the seal housing, yet in some embodiments, the fluid plenum and/or flow path defined by the coupling assembly may be fluidically sealed entirely by one or more sealing interfaces defined by the seal housing.

[0053] The removability of the seal housing may prolong the useful life of the pipe segment and/or the end fitting coupled to the pipe segment, as the seal housing may be replaced in the event of damage or deterioration without removing the fixed portion of the end fitting from the pipe segment. For example, some fluids that are transported by a fluid flowing system may include materials that can interact with various components of a coupling assembly, causing them to deteriorate over time. Some fluids may include chemical groups that can react with a material used to form the various components of a coupling assembly over time. Petroleum-based fluids may include impurities or chemical groups that are corrosive or reactive, such as chlorides, carbon dioxide, organic acids, sulfur-based compounds, salts, and so forth. Additionally, or in the alternative, petroleum-based fluids may include abrasive materials, such as sand, precipitates, drilling mud, corrosion byproducts, and so forth. Further, some fluid flowing systems may flow fluids that are inherently corrosive or abrasive in addition or in the alternative to impurities within the fluid. Though an end casing may be permanently coupled to a pipe segment, a seal housing that has sustained damage or deterioration from such fluids can be decoupled from the end casing and replaced with a new seal housing, thereby extending the useful life of the end fitting.

[0054] Flexible pipe segments that are commonly used with petroleum-based fluids may include an internal sheath formed of a polymeric material or other material that has general compatibility with the fluid transported by the pipe segments. End fittings and other components of coupling assemblies that are commonly used with petroleum-based fluids, however, tend to have a material composition that includes a metal alloy, which can be particularly susceptible to corrosion and/or abrasion. Replacing these end fittings and/or other components of a coupling assembly can be labor intensive and/or cost prohibitive. Additionally, some flexible pipe segments, such as bonded flexible pipe segments, may include an end fitting and/or other components that are permanently coupled to the flexible pipe segment, such as by bonding and/or crimping the end casing to the flexible pipe segment. Replacing an end fitting that is permanently couped to a flexible pipe segment may require cutting, and consequently shortening the flexible pipe segment, which may be labor intensive and/or cost prohibitive, and which may reduce the usefulness of the resultingly shortened pipe segment.

[0055] A polymeric liner may be installed within an end casing, such as by way of an adhesive, to protect the end casing from corrosive and/or abrasive materials. However, such polymeric liners are susceptive to deadhesion and other

damage. For example, petroleum-based fluids may include gases that may permeate through the liner and/or between the liner and the end casing, which may cause blistering and/or deadhesion of at least a portion of the liner. Additionally, or in the alternative, such polymeric liners may decrease the inner diameter of the fluid conduit, resulting in an increase in fluid velocity and/or a decrease in fluid pressure. The increase in fluid velocity may cause increased turbulence, which may lead to general or local fluid processing disturbances, such as localized wear, cavitation, increased friction, and so forth. The decrease in fluid conduit diameter associated with a polymeric liner may cause a dynamic pressure loss coefficient that may have a significant cumulative effect together with other sources of pressure loss throughout the fluid flowing system.

[0056] Advantageously, the present disclosure provides end fittings that include a fixed portion and a removable portion. The fixed portion, or end casing, may be permanently coupled to a pipe segment. The removable portion, or seal housing, may be removably coupled to the end casing. The seal housing may be positioned within a seal housing-receiving bore defined by the end casing and removably coupled to the end casing by one or more coupling elements, such as seal housing bolts extending through a flange of the seal housing, a threaded interface between the seal housing and the seal housing-receiving bore, and/or an interference fit between the seal housing and the seal housing-receiving bore. The presently disclosed seal housings may define a sealing interface between the seal housing and a counterpart fitting, and/or between the seal housing and a seal assembly disposed between the seal housing and the counterpart fitting. The seal housing may include at least one seal bore extending from an axially distal surface of the seal housing. One or more seal elements may be seated the seal bore, such that a sealing interface may be defined between the seal housing and the counterpart fitting at least in part by the one or more seal elements. In some embodiments, the sealing interface may advantageously hold the seal housing and/or the one or more sealing elements in position. For example, the sealing interface may reinforce the coupling between the seal housing and the end casing, and/or the coupling between the end casing and the counterpart fitting. The counterpart fitting to which the end casing is coupled may include a component of a fluid flowing system and/or another pipe segment.

[0057] The presently disclosed seal housings are replaceable, such as in the form of a sacrificial component, without requiring replacement or removal of the end casing. The seal housings may be formed of a material that has general compatibility with the fluid transported by the pipe segments. The seal housings may have an inward diameter that matches an inward diameter of an adjacent pipe segment, thereby avoiding increases in fluid velocity, decreases in fluid pressure, and/or other adverse effects that may be associated with polymeric liners. Thus, in embodiments the internal inward diameter of the seal housings is generally the same as an inward diameter of the adjacent pipe segment, such that pipes fitted with the seal housings of embodiments of the present disclosure do not have a restricted flow bore diameter at the end fitting.

[0058] The presently disclosed end fittings may be utilized with a new pipe segment and/or with a previously fabricated or previously used pipe segment, such as in connection with refurbishing, reconditioning, or retrofitting the pipe segment. The presently disclosed end fittings may be utilized with a flexible pipe segment, such as an unbonded flexible pipe segment or a bonded flexible pipe segment, and/or with an unbonded or bonded flexible pipe segment that includes a smooth bore or a rough bore. Further, the presently disclosed end fittings may be utilized with a pipe segment that has an inflexible or rigid configuration.

[0059] As used herein, the term "flexible pipe segment" refers to a configuration of a tubular pipe body that includes a composite of layered materials that form a pressure-containing conduit that allows large deflections without a significant increase in bending stresses. The terms "rigid" and/or "inflexible," as used herein with reference to a pipe segment, refers to a pipe segment that does not allow large deflections without a significant increase in bending stresses. Rigid or inflexible pipe segments include pipe segments that are not a flexible pipe segment, such as pipe segments formed of a tubular metal alloy.

[0060] The term "unbonded," or "unbonded configuration, " as used herein with reference to a flexible pipe segment, refers to a configuration of a flexible pipe segment that includes one or more armoring layers capable of relative movement with respect to one or more coaxially adjacent polymeric layers. The one or more armoring layers may be formed of a metal alloy. The one or more coaxially adjacent polymeric layers may respectively define an anti-friction layer disposed coaxially between adjacent armoring layers. An anti-friction layer may allow a plurality of armoring layers to move relative to one another.

[0061] The term "bonded," or "bonded configuration," as used herein with reference to a flexible pipe segment, refers to a configuration of a flexible pipe segment that includes one or more armoring layers integrated and bonded to an elastomeric material, such as by way of a vulcanization process. A flexible pipe segment that includes a bonded construction may include one or more textile layers that separate one or more elastomeric layers and that may provide additional structural reinforcement to the flexible pipe segment.

[0062] The term "smooth bore," as used herein with reference to a flexible pipe segment, refers to a flexible pipe segment that has an inward sheath or some other smooth layer as the innermost layer of the pipe segment. The inward sheath or the other smooth layer may be formed of a polymeric material.

[0063] The term "rough bore," as used herein with reference to a flexible pipe segment, refers to a flexible pipe that has a carcass layer as the innermost layer of the pipe segment.

[0064] Example fluids that can be transported by the presently disclosed pipe assemblies include petroleum-based fluids, such as crude oil, petrochemicals, petrochemical feedstocks, petroleum-based gases, petroleum gases, liquified petroleum gas, liquified natural gas, fracking fluid, petroleum-based byproducts, biofuels, commodity chemicals, industrial chemicals, fine chemicals, specialty chemicals, inorganic chemicals, organic chemicals, agrochemicals, industrial gasses, and so forth. Additionally, or in the alternative, the presently disclosed pipe assemblies may be utilized to transport fuels or other chemical products. Additionally, or in the alternative, the presently disclosed pipe assemblies may be utilized to transport water, such as in connection with public utilities, industrial facilities, irrigation, and so forth. Additionally, or in the alternative, the

presently disclosed pipe assemblies may be utilized for utility or auxiliary services, such as supplying process fluids, as seawater intake lines, as mud/cementing lines, as air supply lines (e.g., N_2, O_2, CO_2, etc.), or as conduits for electrical wires, optical fibers, and so forth.

[0065] These and other features of the presently disclosed subject matter are described with reference to the Figures.

[0066] Referring now to the Figures, the presently disclosed subject matter is further described. FIGS. **1**A-**1**D shown an example of a pipe assembly **100** that may be utilized to flow fluid from one location to another, such as from point "A" to point "B." A pipe assembly may include at least one pipe segment **102**. The at least one pipe segment **102** may include a flexible pipe and/or an inflexible pipe or rigid pipe segment. A relatively short pipe segment **102** may have a self-supporting length, as shown in FIG. **1**A. A relatively long pipe segment **102** may be stored on a spool **104**, as shown in FIG. **1**B.

[0067] A pipe segment **102** may include at least one coupling assembly **106** respectively coupled to an end of the pipe segment **102**. The coupling assembly **106** may include an end fitting **107** that has a fixed portion referred to as an end casing **108**, and a removable portion referred to as a seal housing **200**. The end casing **108** may be permanently coupled to the pipe segment **102**. The seal housing **200** may be removably coupled to the end casing **108**. The end casing **108** may be couplable to a counterpart fitting **110**. The seal housing **200** may include one or more sealing interfaces that interact with adjacent componentry to fluidically seal a fluid plenum and/or flow path defined by the coupling assembly **106**.

[0068] As shown in FIGS. **1**A-**1**C, the coupling assembly **106** may include a hub clamp interface **112** configured to clamp the end casing **108** to the counterpart fitting **110**. As shown in FIG. **1**C, the hub clamp interface **112** may include a hub collar **114** configured to provided clamping contact around adjacently situated hubs **116**. A first hub **116***a* may be defined by the end casing **108**, and a second hub **116***b* may be defined by the counterpart fitting **110**. A hub **116** defined by the end casing **108** may sometimes be referred to as a casing-hub. A hub **116** defined by the counterpart fitting **110** may sometimes be referred to as a counterpart-hub. As shown in FIG. **1**D, the coupling assembly **106** may include a flange clamp configured to clamp the end casing **108** to the counterpart fitting **110**. The flange clamp may include a first flange **118***a* and a second flange **118***b* that are couplable to one another, for example, by a plurality of flange-bolts **120** (FIG. **1**B) inserted through flange-bolt holes **122** (FIG. **1**D). The first flange **118***a* may be defined by the end casing **108**, and the second flange **118***b* may be defined by the counterpart fitting **110**. The first flange **118***a* defined by the end casing **108** may sometimes be referred to as an end casing-flange. The second flange **118***b* defined by the counterpart fitting **110** may sometimes be referred to as a counterpart-flange.

[0069] In some embodiments, an end casing **108** may have a material composition that includes a metal alloy. Suitable metal alloys that may be utilized in a material composition for an end casing include carbon steel, austenitic stainless steel, duplex stainless steel, nickel-alloyed steel, molybdenum-alloyed steel, or nickel-molybdenum-alloyed steel, as well as combinations of these. Additionally, or in the alternative, an end casing **108** may have a material composition that includes a composite material. Suitable composite materials that may be utilized in a material composition for an end casing include a polymeric material reinforced with fibers, such as carbon fibers, glass fibers, and/or aramid fibers. Suitable polymeric materials that may be utilized in a composite material for an end casing include any one or more of the thermoplastic materials and/or elastomeric materials described herein.

[0070] As shown in FIGS. **1**C and **1**D, the coupling assembly **106** may include a seal assembly **124**. The seal housing **200** may include one or more seal housing-interfaces **125** configured to interface with one or more seal assembly-interfaces **127** defined by the seal assembly **124**. A counterpart fitting **110** may include one or more counterpart-interfaces **129** configured to interface with an additional one or more seal assembly-interfaces **127** defined by the seal assembly **124**. A fluid plenum or flow path defined by the coupling assembly **106** and/or the seal assembly **124** may be fluidically sealed at least in part by one or more sealing interfaces defined between a seal housing-interface **125** of the seal housing **200** and a seal assembly-interface **127** of the seal assembly **124**. The fluid plenum or flow path may be further fluidically sealed by one or more sealing interfaces defined between an additional seal housing-interface **125** of the seal assembly **124** and a counterpart-interface **129** of the counterpart fitting **110**. In some embodiments, the end casing **108** may interface with the seal assembly **124** and/or the counterpart fitting **110** in a manner that does not provide a sealing interface, with the one or more sealing interfaces provided by the seal housing **200** fluidically sealing the fluid plenum or flow path.

[0071] The seal assembly **124** may include one or more seal elements configured to interface with the seal housing **200** and/or with the counterpart fitting **110**. As shown, the seal assembly **124** may include at least one ring seal **126**. Additionally, or in the alternative, the seal assembly may include at least one seal shroud **128**. A ring seal **126** may include a first seal assembly-interface **127** configured to provide a first sealing interface with at least one seal housing-interface **125**. Additionally, or in the alternative, a ring seal **126** may include a second seal assembly-interface **127** configured to provide a second sealing interface with at least one counterpart-interface **129**.

[0072] As shown, a seal shroud **128** and at least one ring seal **126** may have a coaxial orientation relative to a longitudinal axis (L) of the coupling assembly **106**. For example, at least one ring seal **126** may circumferentially surround the seal shroud **128**. Additionally, or in the alternative, a ring seal **126** and a seal shroud **128** may have an axially adjacent orientation relative to the longitudinal axis (L) of the coupling assembly **106**. The seal shroud **128** and the ring seal **126** may be respectively separate components of a seal element and/or seal assembly **124**. The seal shroud **128** and the seal ring **126** may be coupled, such as removably coupled or permanently coupled, to one another. Additionally, or in the alternative, a ring seal **126** and the seal shroud **128** may define respective portions of an integrally formed seal element and/or seal assembly **124**. The seal assembly **124** may inhibit fluid, such as fluid flowing through the pipe segment **102**, from escaping through the coupling assembly **106**. Additionally, or in the alternative, the seal assembly **124** may inhibit fluid and/or contaminants from entering into interfaces or spaces within the coupling assembly **106**.

[0073] As shown in FIGS. **1**B-**1**D, in some embodiments, the counterpart fitting **110** may be an adapter, such as a

fitting adapter. For example, the counterpart fitting **110** may be configured to couple the coupling assembly to a fluid flowing system, such as a petroleum extraction station, a fluid transfer station, or the like. Additionally, or in the alternative, the counterpart fitting **110** may define a direct interface with a fluid flowing system.

[0074] In some embodiments, as shown, an end cap **130** may be attached to the coupling assembly **106** and/or the counterpart fitting **110**, such as during storage or transportation of the pipe segment **102**, or when the pipe segment **102** is not in use. The end cap **130** may include a charging port **132** for adding or removing fluid from the pipe segment **102**. For example, fluid may be added to the pipe segment **102** prior to placing the pipe segment **102** into service, and/or fluid may be removed from the pipe segment **102** after removing the pipe segment **102** from service. In some embodiments, the pipe segment **102** may be stored or transported with the pipe segment **102** at least partially filled with fluid.

[0075] As shown in FIGS. **1**C and **1**D, the coupling assembly **106** may include at least one seal housing **200**. A seal housing **200** may be positioned within a seal housing-receiving bore defined by one or more components of the coupling assembly **106**, as described herein, for example, with reference to FIGS. **4**A and **4**B, and FIGS. **5**A-**5**F. For example, as shown, a seal housing **200** may be positioned within a seal housing-receiving bore defined by an end casing **108**. The seal housing **200** may be removably coupled to the end casing **108** defining the seal housing-receiving bore. Additionally, or in the alternative, a seal housing **200** may be positioned within a seal housing-receiving bore defined by a counterpart fitting **110**. The seal housing **200** may be removably coupled to the counterpart fitting **110** defining the seal housing-receiving bore.

[0076] The seal housing **200** may define at least one seal bore **202**. A seal bore **202** defined by the seal housing **200** may extend from an axially distal surface of the seal housing **200**. At least a portion of the seal assembly **124**, such as at least a portion of one or more seal elements of the seal assembly **124**, may be seated in a seal bore **202** defined by a seal housing **200**. For example, at least a portion of one or more ring seals **126** may be seated in a seal bore **202** defined by a seal housing **200**. Additionally, or in the alternative, at least a portion of one or more seal shrouds **128** may be seated in a seal bore **202** defined by a seal housing **200**. The at least one seal bore **202** may define one or more of the seal housing-interfaces **125** configured to provide a sealing interface with a seal assembly-interface **127** of the seal assembly **124**. The one or more ring seals **126** and/or the one or more seal shrouds **128** may respectively define a seal assembly-interface **127** configured to provide a sealing interface with a seal housing-interface **125** of the at least on seal bore **202**.

[0077] As shown, a proximal portion of one or more seal elements, such as a ring seal **126** and/or a seal shroud **128**, may be seated in a seal bore **202** defined by a seal housing **200**. As shown, the seal housing **200** may be positioned within a seal housing-receiving bore defined by an end casing **108** and removably coupled to the end casing **108**. A distal portion of the one or more seal elements, such as the ring seal **126** and/or the seal shroud **128**, may interface with the counterpart fitting **110**. In some embodiments, the counterpart fitting **110** may define a seal bore **202** within which the one or more seal elements may be seated. Additionally, or in the alternative, the counterpart fitting may include a seal housing **200** that defines a seal bore **202** within which the one or more seal elements may be seated.

[0078] In some embodiments, the seal housing **200** may provide a sealing interface with a seal assembly **124** and/or with a counterpart fitting **110**, regardless of whether the counterpart fitting **110** and the coupling assembly **106** were designed as respectively mating pairs, and/or regardless of whether the counterpart fitting **110** includes a corresponding seal housing **200**. For example, the seal housing **200** may provide a sealing interface with a seal assembly **124** that was originally designed to mate with a coupling assembly **106** and/or with a counterpart fitting **110** that does not include a seal housing **200**. As another example, a seal housing **200** may provide a sealing interface with a counterpart fitting **110** that was originally designed to mate with a coupling assembly **106** that does not include a seal housing **200**.

[0079] Referring now to FIGS. **2**A-**2**C, example seal housings **200** are further described. An end fitting **107** that includes an end casing **108** and a seal housing **200** removably couplable to the end casing **108** may be utilized with a flexible pipe segment and/or an inflexible or rigid pipe segment, and with an unbonded flexible pipe segment or a bonded flexible pipe segment. Additionally, or in the alternative, an end fitting **107** that includes an end casing **108** and a seal housing **200** removably couplable to the end casing **108** may be utilized with a smooth bore flexible pipe or a rough bore flexible pipe segment, such as a smooth bore, unbonded flexible pipe segment, a rough bore, unbonded flexible pipe segment, a smooth bore, bonded flexible pipe segment, or a rough bore, bonded flexible pipe segment.

[0080] As shown, a seal housing **200** includes a seal housing-body **204** defining a fluid conduit **206** extending longitudinally through the seal housing-body **204**. The seal housing-body **204** may include a sleeve portion **208** and a flange portion **210**. The sleeve portion **208** may define a proximal portion of the seal housing-body **204** and the flange portion **210** may define a distal portion of the seal housing-body **204**. The fluid conduit **206** extends through the sleeve portion **208** and the flange portion **210**.

[0081] The seal housing **200** may include one or more seal bore-interfaces **211** configured to provide a sealing interface between the seal housing **200** and the seal housing-receiving bore defined by the end casing **108**. The one or more sealing interfaces between the seal housing **200** and the seal housing-receiving bore may be configured to prevent fluid from the fluid conduit **206** from flowing between the seal housing **200** and the end casing **108**. The prevention of fluid from flowing between the seal housing **200** and the seal housing-receiving bore is of particular importance for embodiments in which the end casing **108** does not provide a sealing interface with the seal assembly **124** and/or the counterpart fitting **110**. While the end casing **108** may lack such a sealing interface, the fluid conduit **206** may be fluidically sealed by the one or more sealing interfaces between the seal housing **200** and the seal housing-receiving bore, together with the one or more sealing interfaces between the seal housing **200** and the fluid plenum or flow path defined by the coupling assembly **106** and/or the seal assembly **124** may be fluidically sealed at least in part by one or more sealing interfaces defined between the seal housing **200** and the seal assembly **124** and/or the counterpart fitting **110**.

[0082] As shown in FIGS. **2**A-**2**C. the seal housing **200** includes at least one seal bore **202** defined by the seal housing-body **204**. As shown, the seal housing **200** includes

at least one seal bore **202** that extends from an axially distal surface **212** of the seal housing-body **204**. A seal bore **202** may define a radially inward surface of the seal housing **200**. One or more seal elements may be seated within the at least one seal bore **202**. The seal bore **202** and/or the one or more seal elements may define at least a portion of a sealing interface between the seal housing **200** and the seal assembly **124**. A seal bore **202** may include a seal bore-rim **214** that defines a circumferential surface of the seal bore **202**. The circumferential surface defined by the seal bore-rim **214** may face radially inward. The seal bore may include a seal bore-face **216** that defines an axial face of the seal bore **202**, such as an axially distal-facing surface of the seal bore **202**. A seal element of the seal assembly **124** may be seated against the seal bore-rim and/or the seal bore-face **216**.

[0083] In some embodiments, the seal housing **200** may be removably coupled to an end casing **108** of an end fitting **107** (or to a counterpart fitting **110**) by a plurality of seal housing-bolts. Additionally, or in the alternative, the seal housing **200** may be removably coupled to an end casing **108** of a coupling assembly **106** (or to a counterpart fitting **110**) by helical threads. Additionally, or in the alternative, the seal housing **200** may be removably coupled to an end casing **108** of a coupling assembly **106** (or to a counterpart fitting **110**) by an interference fit.

[0084] As shown in FIG. **2**C, the seal housing **200** may include a plurality of seal housing-bolt holes **218** extending longitudinally through the flange portion **210** of the seal housing-body **204**. The seal housing-bolt holes **218** may be circumferentially spaced about the flange portion **210** of the seal housing-body **204**. The seal housing-bolt holes **218** may be through holes configured to align with corresponding end casing-bolt holes correspondingly circumferentially spaced about an end casing **108** of a coupling assembly **106**. The seal housing **200** may additionally or alternatively include a plurality of blind holes **220** extending longitudinally into the axially distal surface **212** of the seal housing-body **204**, such as the flange portion **210** thereof. The blind holes **220** may be configured to receive a tool for installing and/or removing the seal housing **200** from a seal housing-receiving bore. For example, the blind holes **220** may be configured as jack bold holes configured to receive a jack bolt tool.

[0085] The seal housing **200** may include at least one seal groove **222** situated circumferentially about a radially outward surface **224** of the seal housing-body **204**. The at least one seal groove **222** may be respectively configured to receive one or more ring seals. In some embodiments, a proximal portion **226** of the seal housing-body **204** may include one or more seal grooves **222**. A seal groove **222** located at the proximal portion **226** of the radially outward surface **224** of the seal housing-body **204** may be referred to as an outward proximal seal groove. Additionally, or in the alternative, the distal portion **228** of the seal housing-body **204** may include at least one seal groove **222**. A seal groove **222** located at the distal portion **228** of the radially outward surface **224** of the seal housing-body **204** may be referred to as an outward distal seal groove.

[0086] By way of example, the proximal portion **226** of the seal housing-body **204** may include a plurality of seal grooves **222**, such as a primary outward proximal seal groove **230**, a secondary outward proximal seal groove **232**, and a tertiary outward proximal seal groove **234**. The one or more seal grooves **222** located at the proximal portion **226** of the seal housing-body **204** may define at least a portion of a seal bore-interface **211** configured to provide a sealing interface that inhibits fluid, such as fluid flowing through the pipe segment **102**, from accessing an interface or space between the radially outward surface **224** of the seal housing-body **204** and the seal housing-receiving bore. As a further example, the radially outward surface **224** of the distal portion **228** of the seal housing-body may include at least one outward distal seal groove **236**. The at least one seal groove **222** located at the distal portion **228** of the seal housing-body **204** may be configured to inhibit fluid or contaminants, such as from an external source, from accessing the interface or space between the radially outward surface **224** of the seal housing-body **204** and the seal housing-receiving bore.

[0087] The seal housing **200** may have a material composition that includes one or more materials. The material composition of the seal housing **200** may be selected based at least in part on a setting in which the seal housing **200** may be used and/or based at least in part on an environment to which the seal housing **200** may be exposed. In some embodiments, the seal housing **200** may have a material composition that includes a polymeric material. Additionally, or in the alternative, the seal housing **200** may have a material composition that includes a metal alloy. Additionally, or in the alternative, the seal housing **200** may have a material composition that includes a ceramic. Additionally, or in the alternative, the seal housing **200** may have a material composition that includes a composite.

[0088] Suitable polymeric materials that may be included in the material composition of a seal housing **200** include thermoplastic materials such as polyamide, polyethylene, polypropylene, polyurethane, or polyvinylidene fluoride, or other thermoplastic materials, as well as combinations of these. Further suitable polymeric materials that may be included in the material composition of the seal housing may additionally or alternatively include ethylene tetrafluoroethylene (ETFE), polyether ether ketone (PEEK), polyetherketoneketone (PEKK), polymethylmethacrylate (PMMA), polyacrylate, polyacrylonitrile (PAN), polyamide-imide (PAI), polyaryletherketone (PAEK), polycarbonate (PC), polyketone (PK), polyester, polyetherimide (PEI), polyimide (PI), polystyrene (PS), polyethersulfone (PES), polyphenylene sulphide (PPS), polysulfone (PSU), polytetrafluoroethylene (PTFE), or polychlorotrifluoroethylene (PCTFE), as well as combinations of these.

[0089] Suitable metal alloys that may be included in the material composition of a seal housing **200** include austenitic stainless steel, duplex stainless steel, nickel-alloyed steel, molybdenum-alloyed steel, or nickel-molybdenum-alloyed steel, as well as combinations of these.

[0090] Suitable ceramics that may be included in the material composition of a seal housing **200** may include one or more oxide, nitride, or carbide materials that are inorganic and non-metallic. By way of example, suitable ceramic materials may include aluminum oxide, silicon nitride, silicon carbide, or combinations of these.

[0091] Suitable composites that may be included in the material composition of a seal housing **200** include a polymeric material reinforced with fibers, such as carbon fibers, glass fibers, and/or aramid fibers. Suitable polymeric materials that may be utilized in a composite material for an end casing include any one or more of the thermoplastic mate-

rials and/or elastomeric materials described herein. Further suitable composite materials may include a ceramic material.

[0092] Referring now to FIGS. **3**A-**3**D, example pipe segments **102** are further described. As shown in FIGS. **3**A-**3**D, a pipe segment **102** may include a flexible pipe segment **300**. The flexible pipe segment **300** may include an unbonded flexible pipe segment **302**, as shown, for example, in FIGS. **3**A and **3**B. Additionally, or in the alternative, The flexible pipe segment **300** may include a bonded flexible pipe segment **304**. The presently disclosed coupling assemblies **106**, including the presently disclosed end casings **108** and seal housings **200**, may be utilized with any flexible pipe segment **300**, including an unbonded flexible pipe segment **302** and/or a bonded flexible pipe segment **304**.

[0093] A flexible pipe segment **300** may be configured according to American Petroleum Institute (API) Recommended Practice **17**B, Fifth Edition, May 2014 (Reaffirmed, March 2021), the entirety of which is incorporated by reference herein as if set forth verbatim. Additionally, or in the alternative, an unbonded flexible pipe segment **302** may be configured according to API Specification **17**J, Specification for Unbonded Flexible Pipe segment, Fourth Edition, May 2014, the entirety of which is incorporated by reference herein as if set forth verbatim. Additionally, or in the alternative, a bonded flexible pipe segment **304** may be configured according to API Specification **17**K, Specification for Bonded Flexible Pipe segment, May 1, 20206, Reaffirmed May 2010, the entirety of which is incorporated by reference herein as if set forth verbatim.

[0094] By way of example, a flexible pipe segment **300**, such as an unbonded flexible pipe segment **302** or a bonded flexible pipe segment **304**, may include an inward sheath **306**, an outward sheath **308**, and one or more armoring layers **310** situated between the inward sheath **306** and the outward sheath **308**. The inward sheath **306** provides containment of fluid within the bore of the flexible pipe segment **300**. The outward sheath **308** provides protection against the external environment within which the flexible pipe segment **300** may be utilized. The one or more armoring layers **310** may provide structural support to the flexible pipe segment **300**, including support to resist axial and/or radial forces.

[0095] The inward sheath **306** may be formed of a material selected based at least in part on compatibility with the fluid intended to be transported through the flexible pipe segment **300**. The outward sheath **308** may be formed of a material selected based at least in part on the environment within which the flexible pipe segment **300** may be utilized. In some embodiments, the inward sheath **306** and/or the outward sheath **308** may be formed of a polymeric material. By way of example, suitable polymeric materials that may be utilized in an inward sheath **306** and/or an outward sheath **308** may include one or more thermoplastic materials and/or elastomeric materials described herein, such as polyamide, polypropylene, polyethylene, polyurethane, or polyvinylidene fluoride, as well as combinations of these.

[0096] The one or more armoring layers **310** may include one or more reinforcing materials, such as metal alloys and/or one or more composite materials. The one or more armoring layers **310** may include pressure armoring layers and/or tensile armoring layers. By way of example, suitable metal alloys that may be utilized in a reinforcing material for an armoring layer **310** include carbon steel, austenitic stainless steel, duplex stainless steel, nickel-alloyed steel, molybdenum-alloyed steel, or nickel-molybdenum-alloyed steel, as well as combinations of these. Suitable composite materials may include a polymeric material reinforced with fibers, such as carbon fibers, glass fibers, and/or aramid fibers. Suitable polymeric materials that may be utilized in a composite material include any one or more of the thermoplastic materials and/or elastomeric materials described herein.

[0097] As shown in FIGS. **3**A and **3**B, an unbonded flexible pipe segment **302** may include one or more armoring layers **310** that are not bonded to adjacent layers. For example, a plurality of armoring layers **310** may be respectively separated from one another by an anti-friction layer **312**. Additionally, or in the alternative, an anti-friction layer **312** may be located between an armoring layer **310** and the inward sheath **306**, and/or between an armoring layer **310** and the outward sheath **308**. The respective anti-friction layer(s) **312** may enhance relative slippage between adjacently situated layers of the unbonded flexible pipe segment **302**.

[0098] As shown in FIGS. **3**C and **3**D, a bonded flexible pipe segment **304** may include one or more armoring layers **310** that include a reinforcing material, such as steel cables, bonded to an elastomeric matrix. The reinforcing material may be fully encapsulated within the elastomeric matrix. The elastomeric matrix may be bonded to one or more adjacent layers, such as to the inward sheath **306** and/or the outward sheath **308**. Additionally, the elastomeric matrix may be bonded to the end casing **108**. Further, the end casing may be crimped into position within the bonded flexible pipe segment **304**. The end casing **108** may be permanently coupled to the bonded flexible pipe segment at least in part by bonding with the elastomeric matrix and/or the crimping of the end casing **108** within the bonded flexible pipe segment **304**. The reinforcing material may be bonded to the elastomeric matrix by way of a vulcanization process, such as in an autoclave. The vulcanization process may cause the elastomeric material to crosslink and bond to the reinforcing material, the inward sheath **306**, and the outward sheath **308**.

[0099] In some embodiments, a flexible pipe segment **300**, such as an unbonded flexible pipe segment **302** and/or a bonded flexible pipe segment **304**, may include an outer armoring layer (not shown) that surrounds the outward sheath **308**. The outer armoring layer may protect the flexible pipe segment **300** from mechanical impact, abrasion, weathering, and the like. For example, an unbonded flexible pipe segment **302** may include an inward sheath **306**, an outward sheath **308**, one or more armoring layers **310** between the inward sheath **306** and the outward sheath **308**, and an outer armoring layer surrounding the outward sheath **308**. Suitable unbonded flexible pipe segments **302** that include such a configuration include COFLEXIP® unbonded flexible pipe segments **302**, available from TechnipFMC, Paris, France.

[0100] Suitable elastomeric materials that may be utilized in an armoring layer **310** for a bonded flexible pipe segment **304** include butyl rubber, chlorobutyl rubber, chlorinated polyethylene (CPE), ethylene propylene rubber (EPDM), hydrogenated nitrile butadiene rubber (HNBR), chlorosulfonated polyethylene, natural rubber, polychloroprene (neoprene), nitrile rubber (NBR), nitrile blended PVC (NVC), acrylate rubber, styrene-butadiene rubber (SBR), silicone rubber, or fluorinated rubber, as well as combinations of these. Additionally, or in the alternative, one or more

of the thermoplastic materials described herein may be utilized in an armoring layer **310** for a bonded flexible pipe segment **304**.

[0101] As shown in FIGS. **3**B and **3**D, in some embodiments, a flexible pipe segment **300**, such as an unbonded flexible pipe segment **302** or a bonded flexible pipe segment **304**, may include a carcass layer **314**. The flexible pipe segments **300** shown in FIGS. **3**B and **3**D represent a rough bore pipe segment as a result of the carcass layer **314** being the inward-most layer of the pipe segment **102**. The flexible pipe segments **300** shown in FIGS. **3**A and **3**C represent a smooth bore pipe segment as a result of the inward sheath **306** being the inward-most layer of the pipe segment **102**.

[0102] A carcass layer **314**, such as shown in FIGS. **3**B and **3**D, may be formed of one or more strips of material, such as a metal alloy material, that are shaped into an interlocked helical tube. The one or more strips of material may be folded and wound in a helix such that sequential windings are geometrically locked with one another. The carcass layer **314** may provide enhanced collapse resistance, such as for implementations in which the flexible pipe segment **300** may be exposed to high levels of internal or external hydrodynamic loading. Suitable metal alloys that may be utilized in a carcass of a flexible pipe segment **300** include austenitic stainless steel, duplex stainless steel, nickel-alloyed steel, molybdenum-alloyed steel, or nickel-molybdenum-alloyed steel, as well as combinations of these.

[0103] In some embodiments, a pipe segment **102**, such as a flexible pipe segment **300**, may include a multibore configuration. A multibore configuration may include a plurality of flexible pipe segments **300** combined into a common pipe segment **102**, thus reducing the number of distinct lines in a fluid flowing system and providing a simplified layout of the fluid flowing system. A multibore configuration may include a plurality of flexible pipe segments **300** (and/or one or more pipe segments that are inflexible or rigid) combined in a bundle, with one or more external layers surrounding the bundle. The flexible pipe segments may be wound helically. One or more filler materials may be utilized to provide a circular cross section around the bundle of flexible pipe segments **300**. The one or more external layers may include one or more armoring layers **310** and/or an outward sheath **308** respectively configured as described herein. One or more of the pipe segments **102** included in a multibore configuration may have an end fitting **107** configured according to the present disclosure. Example flexible pipe segments **300** that have a multibore configuration include integrated service umbilicals, integrated production bundles, and the like. Such multibore configurations may include pipe segments **102** configured for fluid flow, as well as pipe segments that include electrical cables, optical fibers, heating fluid lines, and so forth.

[0104] A pipe segment **102**, such as a flexible pipe segment **300**, may include an inward diameter of from 5 to 60 centimeters, such as from 5 to 15 centimeters, such as from 15 to 30 centimeters, or such as from 30 to 60 centimeters. A pipe segment **102**, such as a flexible pipe segment **300**, may have a length of less than 1 meter to several thousand meters. For example, a pipe segment **102** may have a length of from 0.1 meter to 2,000 meters, such as from 1 meter to 1,000 meters, such as from 1 meter to 10 meters, such as from 10 meters to 100 meters, such as from 100 meters to 800 meters, such as from 800 meters to 1,200 meters, or such as from 1,200 meters to 2,000 meters.

[0105] In some embodiments, a pipe assembly **100** may include a pipe segment **102** that has a rigid or inflexible configuration. By way of example, a pipe segment **102** that has a rigid or inflexible configuration may be formed of a tubular metal alloy, such as carbon steel, austenitic stainless steel, duplex stainless steel, nickel-alloyed steel, molybdenum-alloyed steel, or nickel-molybdenum-alloyed steel, as well as combinations of these. Other rigid or inflexible materials may also be utilized in addition or in the alternative to a metal alloy.

[0106] Referring now to FIGS. **4**A and **4**B, example coupling assemblies **106** are further described. As shown in FIG. **4**A, a coupling assembly **106** may be coupled to an unbonded flexible pipe segment **302**. As shown in FIG. **4**B, a coupling assembly **106** may be coupled to a bonded flexible pipe segment **304**. As shown, a fluid flowpath **400** may be defined by a radially inward pipe-surface **402** of a pipe segment **102**. The radially inward pipe-surface **402** may be defined by an inward sheath **306** (see, e.g., FIG. **4**A) or by a carcass layer **314** (see, e.g., FIG. **4**B). Additionally, the fluid flowpath **400** may be defined by one or more components of a coupling assembly **106**, such as by a radially inward coupling assembly-surface **404**. The fluid flowpath **400** may generally have a similar diameter as between a portion of the fluid flowpath **400** defined the radially inward coupling assembly-surface **404** and a portion of the fluid flowpath **400** defined by the radially inward pipe-surface **402**.

[0107] As shown in FIG. **4**A, the respective layers of an unbonded flexible pipe segment **302** may be coupled to an end fitting **107** of a coupling assembly **106**. As shown in FIG. **4**B, the respective layers of a bonded flexible pipe segment **304** may be bonded to an end fitting **107** of a coupling assembly **106**. The end fitting **107** and a distal portion of the one or more layers of the bonded flexible pipe segment **304** may be permanently bonded to one another to form a one-piece component. The end fitting **107** may include a pipe segment-receiving bore **406** configured to receive at least part of a distal portion of one or more layers of a pipe segment **102**, such as a distal portion of an inward sheath **306**, a distal portion of a carcass layer **314**, and/or a distal portion of an armoring layer **310**. The pipe segment-receiving bore **406** may include a pipe segment-receiving seat **408** that faces a radially inward surface. Additionally, or in the alternative, the pipe segment-receiving bore **406** may include a pipe segment-receiving rim **410** that includes a proximally oriented axial face, as shown, for example, in FIG. **4**B.

[0108] The pipe segment-receiving seat **408** may circumferentially surround one or more layers of the flexible pipe segment **300**, such as the inward sheath **306**, the carcass layer **314**, and/or one or more armoring layers **310**. In some embodiments, as shown in FIG. **4**B, one or more layers of the flexible pipe segment **300**, such as the inward sheath **306**, the carcass layer **314**, and/or one or more armoring layers **310** may be situated proximally adjacent to the pipe segment-receiving rim **410**. For example, the one or more layers of the flexible pipe segment **300** may abut the pipe segment-receiving rim **410**. As shown in FIG. **4**A, one or more layers of an unbonded flexible pipe segment **302** may be coupled to the end fitting **107** at least in part at the pipe segment-receiving bore **406**. As shown in FIG. **4**B, one or more layers

of a bonded flexible pipe segment **304** may be bonded to the end fitting **107** at least in part at the pipe segment-receiving bore **406**.

[0109] As shown, for example, in FIG. **4**A, in some embodiments, the coupling assembly **106** may include a cannula **412**. The cannula **412** may have an annular configuration that includes a radially inward cannula-surface **414** and a radially outward cannula-surface **416**. The radially inward cannula-surface **414** may define a portion of the fluid flowpath **400**. The radially inward coupling assembly-surface **404** may include the radially inward cannula-surface **414**. The cannula **412** may support an endward portion of one or more layers of a flexible pipe segment **300**, such as an endward portion of the inward sheath **306** of an unbonded flexible pipe segment **302**. The cannula **412** may additionally include a distal cannula-face **418** and a proximally oriented taperer **420**. The distal cannula-face **418** may define an abutting surface that abuts one or more corresponding surfaces of the coupling assembly **106**. The proximally oriented taperer **420** may allow the inward sheath **306** to be slidably guided over the radially outward cannula-surface **416**.

[0110] An endward portion of the inward sheath **306** may be clamped between the radially outward cannula-surface **416** and one or more radially inward clamping surfaces of the coupling assembly **106**. For example, as shown, the inward sheath **306** may be clamped between the cannula **412** and the end fitting **107** at least in part by a coupling flange **422**. The coupling flange **422** may have an annular configuration. The coupling flange **422** may include one or more surfaces that interface with the end fitting **107**. The coupling flange **422** may be coupled to the end fitting **107** by one or more coupling flange-bolts **424**. In some embodiments, the coupling assembly **106** may include one or more crimping rings **426**. The one or more crimping rings **426** may individually or collectively define an annular configuration. A crimping ring **426** may define an integrally formed portion of the coupling flange **422**, and/or a crimping ring **426** may define a component that is separate from the coupling flange **422**.

[0111] As shown, a crimping ring **426** may include a radially outward crimping ring-surface **428** that interfaces with the end fitting **107**, and a radially inward crimping ring-surface **430** that interfaces with the inward sheath **306**. The end fitting **107** may include a radially inward end fitting-surface **432** that interfaces with the radially outward crimping ring-surface **428**. The radially outward crimping ring-surface **428** may have a distally oriented taper that corresponds to the radially inward end fitting-surface **432**, such as that corresponds to a distally oriented taper of the and the radially inward end fitting-surface **432**. The coupling flange **422** may cause the crimping ring **426** to slidably engage with the end fitting **107** as the coupling flange **422** becomes coupled to the end fitting **107**, such as by the one or more coupling flange-bolts **424**. As the radially outward crimping ring-surface **428** slidably engages with the radially inward end fitting-surface **432**, the crimping ring may bear upon the inward sheath **306**, causing at least part of the endward portion of the inward sheath **306** to be crimped between the radially outward cannula-surface **416** and the radially inward crimping ring-surface **430**.

[0112] In some embodiments, the coupling assembly **106** may include one or more stop rings **434**. The one or more stop rings **434** may be situated proximally adjacent to the one or more crimping rings **426**. The one or more stop rings **434** may individually or collectively define an annular configuration. A stop ring **434** may define an integrally formed portion of the coupling flange **422**, and/or a stop ring **434** may define a component that is separate from the coupling flange **422**. The one or more stop rings **434** may inhibit the inward sheath **306** from slipping, such as under tension forces imparted to the flexible pipe segment **300**.

[0113] In some embodiments, the coupling assembly **106** may include a cannula ring **436**. The cannula ring **436** may be situated longitudinally between the end fitting **107** and the cannula **412**, and/or between the end fitting **107** and the endward portion of the inward sheath **306** of the unbonded flexible pipe segment **302**. The cannula ring **436** may provide axial and/or radial support to the cannula **412** and/or to the inward sheath **306**. Additionally, or in the alternative, the cannula ring **436** may provide a sealing interface between the end fitting **107** and the cannula **412**, between the end fitting **107** and the inward sheath **306**, and/or between the cannula **412** and the inward sheath **306**.

[0114] The cannula ring **436** may have an annular configuration that includes a radially inward cannula ring-surface **438** and a radially outward cannula ring-surface **440**. The cannula ring **436** may additionally include a distal cannula ring-face **442** and a proximal cannula ring-face **444**. The radially inward cannula ring-surface **438** may define a portion of the fluid flowpath **400**. The radially inward coupling assembly-surface **404** may include the radially inward cannula ring-surface **438**. The radially outward cannula ring-surface **440** and/or the distal cannula ring-face **442** may interface with one or more surfaces of the end fitting **107**. The proximal cannula ring-face **444** may be oriented towards the inward sheath **306** and/or the cannula **412**.

[0115] In some embodiments, the cannula ring **436** may include a cannula-receiving seat **446** that includes a radially inward surface. Additionally, or in the alternative, the cannula ring **436** may include a cannula-receiving rim **448** that includes a proximally oriented axial face. The cannula-receiving seat **446** may circumferentially surround a distal portion of the cannula **412**. The cannula-receiving seat **446** may receive a portion of the radially outward cannula-surface **416**, such as a distal portion of the radially outward cannula-surface **416**. The cannula-receiving rim **448** may be located distally adjacent to the distal cannula-face **418** of the cannula **412**. The cannula-receiving rim **448** may receive the distal cannula-face **418** of the cannula **412**.

[0116] In some embodiments, the distal cannula-face **418** of the cannula **412** may bear upon the cannula-receiving rim **448**, for example, as the coupling flange **422** becomes coupled to the end casing **108**, such as by the one or more coupling flange-bolts **424**. Additionally, or in the alternative, the radially outward cannula-surface **416** of the cannula **412** may bear upon the cannula-receiving seat **446**, for example, as the coupling flange **422** becomes coupled to the end casing **108**, such as by the one or more coupling flange-bolts **424**. A sealing interface may be defined between the distal cannula-face **418** of the cannula **412** and the cannula-receiving rim **448** of the cannula ring **436**, and/or between the radially outward cannula-surface **416** and the cannula-receiving seat **446**. Additionally, or in the alternative, a sealing interface may be defined between the cannula ring **436** and the end fitting **107**.

[0117] As shown, for example, in FIG. **4**A, in some embodiments, the end fitting **107** may include a cannula

ring-receiving bore **450** configured to receive a cannula ring **436**. The cannula ring-receiving bore **450** may include a cannula ring-receiving seat **452** that includes a radially inward surface. Additionally, or in the alternative, the cannula ring-receiving bore **450** may include a cannula ring-receiving rim **454** that includes a proximally oriented axial face. The cannula ring-receiving seat **452** may be located distally adjacent to the radially inward end fitting-surface **432** of the end fitting **107**. Additionally, or in the alternative, the cannula ring-receiving seat **452** may define a portion of the radially inward end fitting-surface **432** of the end fitting **107**. The cannula ring-receiving seat **452** may circumferentially surround the cannula ring **436**. The cannula ring-receiving seat **452** may receive the radially outward cannula ring-surface **440** of the cannula ring **436**. The cannula ring-receiving rim **454** may be located distally adjacent to the distal cannula ring-face **442** of the cannula ring **436**. The cannula ring-receiving rim **454** may receive the distal cannula ring-face **442** of the cannula ring **436**.

[0118] In some embodiments, the distal cannula ring-face **442** of the cannula ring **436** may bear upon the cannula ring-receiving rim **454**, for example, as the coupling flange **422** becomes coupled to the end fitting **107**, such as by the one or more coupling flange-bolts **424**. Additionally, or in the alternative, the radially outward cannula ring-surface **440** of the cannula ring **436** may bear upon the cannula ring-receiving seat **452**, for example, as the coupling flange **422** becomes coupled to the end fitting **107**, such as by the one or more coupling flange-bolts **424**. A sealing interface may be defined between the distal cannula ring-face **442** of the cannula ring **436** and the cannula ring-receiving rim **454** of the end fitting **107**, and/or between the radially outward cannula ring-surface **440** of the cannula ring **436** and the cannula ring-receiving seat **452**. Additionally, or in the alternative, the proximal cannula ring-face **444** of the cannula ring **436** and a distal end of the inward sheath **306** may define a sealing surface. In some embodiments, the cannula ring **436** may include a cannula ring flange **456** defined between the cannula-receiving seat **446** and the radially outward cannula ring-surface **440**. The cannula ring flange **456** may have a sufficient length to compensate for variation in a longitudinal position of the inward sheath **306** situated between the radially outward cannula-surface **416** of the cannula **412** and the radially inward crimping ring-surface **430** of the crimping ring **426**. The cannula ring **436** may be formed, e.g., machined, with a dimensional tolerance suitable to provide the sealing surface with respect to the end fitting **107**, the cannula **412**, and/or the inward sheath **306**.

[0119] Referring further to FIG. **4**A, an endward portion of one or more armoring layers **310** of a flexible pipe segment **300**, such as an unbonded flexible pipe segment **302**, may be clamped to the end fitting **107** by one or more armoring layer-clamps **458**. Additionally, or in the alternative, an endward portion of one or more armoring layers **310** may be clamped to an armoring layer-flange **460**. At least a portion of the one or more armoring layers **310** in proximity to the coupling assembly **106** may be encased in an encasing material **462**. The encasing material **462** may further secure the one or more armoring layers **310** to and/or within the coupling assembly **106** or one or more components thereof. Additionally, or in the alternative, the encasing material **462** may inhibit external fluids such as water, or contaminants, from penetrating into the coupling assembly **106**. The encasing material **462** may additionally or alternatively inhibit fluid within the fluid flowpath **400** from penetrating into the coupling assembly **106**. The encasing material **462** may include one or more thermoplastic materials such as one or more of the thermoplastic materials described herein.

[0120] An endward portion of the outward sheath **308** of a flexible pipe segment **300**, such as an unbonded flexible pipe segment **302**, may be secured to the coupling assembly **106** by an outward-sheath clamping assembly (not shown). In some embodiments, the coupling assembly **106** may include a coupling assembly-cover **464**. The coupling assembly-cover **464** may be coupled to the end fitting **107**, such as by helical threads **466**. The outward-sheath clamping assembly (not shown) may couple the endward portion of the outward sheath **308** to the coupling assembly-cover **464**. By way of example, the coupling assembly-cover **464** may include coupling assembly-componentry similar to the componentry described with respect to the coupling of the inward sheath **306** to the coupling assembly **106**, such as an outer sheath-cannula, an outer sheath-coupling flange, outer sheath-coupling flange-bolts, one or more outer sheath-crimping rings, and/or one or more outer sheath-stop rings.

[0121] As shown, for example, in FIG. **4**B, an end fitting **107** may include a pipe segment-receiving seat **408** that circumferentially surrounds one or more layers of the bonded flexible pipe segment **304**, such as the inward sheath **306**, the carcass layer **314**, and/or one or more armoring layers **310**. Additionally, or in the alternative, the end fitting **107** may include a pipe segment-receiving rim **410** situated distally adjacent to a distal end of one or more layers of the flexible pipe segment **300**, such as the inward sheath **306**, the carcass layer **314**, and/or one or more armoring layers **310**. The pipe segment-receiving seat **408** may be bonded to a radially outward surface of a circumferentially adjacent layer of the bonded flexible pipe segment **304**, such as a radially outward surface of the inward sheath **306** and/or a radially outward surface of an armoring layer **310**. In some embodiments, a bonding gap **468** may be located between the pipe segment-receiving rim **410** and the distal end of the one or more layers of the bonded flexible pipe segment **304**. Additionally, or in the alternative, the pipe segment-receiving rim **410** may be bonded to distal end of one or more layers of the bonded flexible pipe segment **304**, such as a distal end of the inward sheath **306**, the carcass layer **314**, and/or one or more an armoring layers **310**.

[0122] Referring further to FIGS. **4**A and **4**B, in some embodiments, a radially inward portion of the end fitting **107** may be formed to receive a seal housing **200** (see, e.g., FIGS. **2**A-**2**C). A new or previously manufactured end fitting **107** may be formed to receive a seal housing **200** at least in part by converting the end fitting **107** into an end casing **108** by forming a seal housing-receiving bore **500** in the end fitting **107**. The seal housing-receiving bore **500** may be configured and arranged to receive a seal housing **200** such that the end fitting **107** includes the end casing **108** and the seal housing **200**. In some embodiments, an end fitting **107** that is permanently coupled to a pipe segment **102** may be refurbished, reconditioned, retrofitted, or the like, at least in part by converting the end fitting into an end casing **108** by forming a seal housing-receiving bore **500** in the end fitting **107**, for example, as an alternative to replacing the pipe segment **102** to which the end fitting **107** is permanently coupled.

[0123] The seal housing-receiving bore **500** may extend longitudinally through the end casing **108**. In some embodi-

ments, a seal housing-receiving bore **500** may extend to the cannula ring-receiving seat **452** of the end casing **108** and/or to the radially inward end casing-surface **432** of the end casing **108**, such as in the case of an unbonded flexible pipe segment **302**. Alternatively, a seal housing-receiving bore **500** terminate at position of the end casing **108** located axially distal to the cannula ring-receiving rim **454** of the end casing **108**. In some embodiments, a seal housing-receiving bore **500** may extend to a pipe segment-receiving seat **408** of the end casing **108** and/or to the pipe segment-receiving rim **410** of the end casing, such as in the case of a bonded flexible pipe segment **304**. Alternatively, a seal housing-receiving bore **500** terminate at position of the end casing **108** located axially distal to the pipe segment-receiving seat **408** and/or to the pipe segment-receiving rim **410** of the end casing **108**. In some embodiments, the seal housing-receiving bore **500** may be formed by increasing an inner diameter of the end casing **108**, such as by machining, boring, or otherwise removing a portion of the end casing **108**. Additionally, or in the alternative, an end casing **108** may be originally manufactured with an inner diameter that defines a seal housing-receiving bore **500**.

[0124] In some embodiments, a surface treatment may be applied to at least a portion of a seal housing-receiving bore **500** and/or to at least a portion of a seal housing **200**. The surface treatment may enhance a sealing interface between at least a portion of the seal housing **200** and at least a portion of the seal housing-receiving bore **500**. Additionally, or in the alternative, a surface finish may prolong a useful life of the seal housing **200**, the end casing **108** and/or the coupling assembly **106**. In some embodiments, the surface treatment may include a coating, such as a film. The coating may provide a surface with enhanced smoothness. In some embodiments, the coating may fill or cover machining marks or other surface imperfections resulting from forming a manufacturing or refurbishing process. The coating may include a ceramic, an oxide, an epoxy resin, a polyester resin an acrylic resin, a polyurethane resin, a metal, a metal oxide, a silicate, a silicate oxide, a rare earth element, a rare earth oxide, as well as combinations of these. The coating may be applied using a coating process such as a sol-gel coating process, a micro-arc oxidation process, an atomic layer deposition process, an electrochemical process, a plasma treatment process, a solution immersion process, a surface deposition coating process, a chemical vapor deposition process, a laser-cladding process, a dip-coating process, a spray process, an electrolytic passivation process, a chromate conversion process, a phosphate conversion process, or a fusion bonding process, as well as combinations of these.

[0125] Referring now to FIGS. **5**A-**5**F, further described are coupling assemblies **106** and/or end fittings **107** that include an end casing **108** permanently coupled to a pipe segment **102** and a seal housing **200** removably coupled to the end casing **108**. The coupling assemblies **106** and/or end fittings **107** shown in FIGS. **5**A-**5**F are described with reference to a flexible pipe segment **300**. In other embodiments, the coupling assemblies **106** and/or end fittings **107** described with reference to FIGS. **5**A-**5**F may be coupled to a rigid or inflexible pipe segment. While FIGS. **5**A-**5**E depict an unbonded flexible pipe segment **302**, the features described with reference to FIGS. **5**A-**5**E may be additionally or alternatively implemented with a bonded flexible pipe segment **304**. While FIGS. **5**A-**5**D depict a flexible pipe segment **300** that includes a smooth bore, the features described with reference to FIGS. **5**A-**5**D may be additionally or alternatively implemented with a flexible pipe segment **300** that includes a rough bore. While FIG. **5**E depicts a flexible pipe segment **300** that includes a rough bore, the features described with reference to FIG. **5**E may be additionally or alternatively implemented with a flexible pipe segment **300** that includes a smooth bore. While FIG. **5**F depicts a bonded flexible pipe segment **304** that includes a rough bore, the features described with reference to FIG. **5**F may be additionally or alternatively implemented with an unbonded flexible pipe segment that includes a smooth bore or a rough bore, and/or with a flexible pipe segment **300** that includes a smooth bore. While FIGS. **5**A-**5**E depict an end casing **108** that includes a hub **116** configured to interface with a hub clamp interface **112**, the features described with reference to FIGS. **5**A-**5**E may be additionally or alternatively implemented with an end casing **108** that includes a flange **118**. While FIG. **5**F depicts an end casing **108** that includes a flange **118**, the features described with reference to FIG. **5**F may be additionally or alternatively implemented with an end casing **108** that includes a hub **116**.

[0126] As shown in FIGS. **5**A-**5**F, an end casing **108** may define a seal housing-receiving bore **500** extending longitudinally through the end casing **108**. A seal housing **200** may be positioned within the seal housing-receiving bore **500** and removably coupled to the end casing **108**. The seal housing **200** may define a fluid conduit **206** extending longitudinally through the sleeve portion **208** and the flange portion **210** of the seal housing. The fluid conduit **206** may define a portion of the fluid flowpath **400**. The fluid conduit **206** defined by the seal housing **200** may include a diameter of from 5 to 60 centimeters, such as from 5 to 15 centimeters, such as from 15 to 30 centimeters, or such as from 30 to 60 centimeters.

[0127] The seal housing **200** may include a sleeve portion **208** defining a proximal portion of the seal housing **200**. The seal housing-receiving bore **500** may include a sleeve-receiving bore **502**, and the sleeve portion of the seal housing **200** may be positioned within the sleeve-receiving bore **502**. In some embodiments, the seal housing **200** may include a flange portion **210** defining a distal portion of the seal housing. The seal housing-receiving bore **500** may include a flange-receiving bore **504**, and the flange portion **210** of the seal housing **200** may be positioned within the flange-receiving bore **504**.

[0128] The seal housing **200** may fit within the seal housing-receiving bore **500** of the end casing **108** with a circumferential clearance of from 10 to 100 micrometers. The circumferential clearance may be determined with respect to at least one longitudinal position of the seal housing **200**. In some embodiments, at least a portion of the seal housing-receiving bore **500** may include a taper defining a decreasing diameter along a longitudinally proximal direction. The taper may provide for a relatively tighter fit and/or sealing interface within the seal housing-receiving bore **500** with respect to a proximal portion **226** of the seal housing **200**.

[0129] In some embodiments, at least part of the seal housing **200** may have an interference fit with a corresponding portion of the seal housing-receiving bore **500**. In some embodiments, the seal housing **200** may be inserted within the seal housing-receiving bore **500** at least in part by a shrink fitting process. The shrink fitting process may include cooling at least a portion of the seal housing **200** to cause a

thermal contraction of the cooled portion of the seal housing **200**, thereby allowing the seal housing **200** to fit within the seal housing-receiving bore **500** more readily. Additionally, or in the alternative, the shrink fitting process may include heating at least a portion of the end casing **108** to cause a thermal expansion of the heated portion of the end casing **108**, thereby allowing the seal housing-receiving bore **500** to receive the seal housing **200** more readily. In some embodiments, the seal housing **200** may expand as a result of hydrodynamic pressure exerted upon the fluid conduit **206** by fluid flowing therethrough and/or as a result of a heat transfer relationship with the fluid flowing through the fluid conduit **206**. Such expansion may provide for a tighter fit between the seal housing **200** and the seal housing-receiving bore **500** during at least some conditions of fluid flow through the fluid conduit **206**.

[0130] In some embodiments, a seal housing **200** may be coupled to an end casing **108** by one or more seal housing-couplings **506**. As shown in FIGS. **5**A-**5**F, the one or more seal housing-couplings **506** may include a plurality of seal housing-bolts. The flange portion **210** of the seal housing **200** may include a plurality of seal housing-bolt holes. The seal housing-bolts may respectively extend longitudinally through the flange portion **210** of the seal housing-body **204**, through a corresponding seal housing-bolt hole **218** (FIG. **2**C). The seal housing-bolts may be secured within a corresponding end casing-bolt hole **508** in the end casing **108** of the coupling assembly **106**. The flange-receiving bore **504** may include a distal flange face **510**, and the plurality of end casing-bolt holes **508** may be circumferentially spaced about the distal flange face **510**. corresponding to the plurality of bolt holes of the distal flange face.

[0131] Additionally, or in the alternative, a seal housing-coupling **506** may include one or more mating pairs of helical threads (not shown) defined by a radially outward surface **224** of the seal housing **200** and by the seal housing-receiving bore **500**. For example, the seal housing-receiving bore **500** may include a first one or more helical threads, and the seal housing **200** may include a second one or more helical threads. The first one or more helical threads may interface with the second one or more helical threads. The first one or more helical threads may be situated about at least part of the flange-receiving bore **504**, and the second one or more helical threads may be situated about at least part of the flange portion **210** of the seal housing **200**. Additionally, or in the alternative, the first one or more helical threads may be situated about at least part of the sleeve-receiving bore **502**, and the second one or more helical threads may be situated about at least part of the sleeve portion **208** of the seal housing **200**. Additionally, or in the alternative, a seal housing-coupling **506** may include an interference fit between at least part of the seal housing **200** and a corresponding portion of the seal housing-receiving bore **500**.

[0132] As shown in FIGS. **5**A-**5**F, the seal housing **200** may define at least one seal bore **202** extending from an axially distal surface **212** of the seal housing **200**, such as an axially distal surface **212** of the flange portion **210** of the seal housing **200**. One or more sealing elements may be seated in the at least one seal bore **202**. In some embodiments, as shown, the at least one seal bore **202** may include a radial seal bore **512**, as described further below with reference to FIGS. **6**A and **6**B, and **6**E and **6**F. The radial seal bore **512** may define a radially inward surface of the seal housing **200**. The radial seal bore **512** may additionally define an axially inset surface of the seal housing **200**. The radially inward surface of the seal housing **200** may include a seal-receiving seat **514**, and the axially inset surface of the seal housing **200** may include a seal-receiving rim **516**. In addition, or in the alternative to a radial seal bore **512**, the at least one seal bore **202** may include an axial seal bore defined by an axially distal surface **212** of the seal housing **200**, as described further below with reference to FIGS. **6**C and **6**D, and **6**G and **6**H.

[0133] The seal housing **200** and/or the coupling assembly **106** may include one or more ring seals **126** seated in a respective one of the at least one seal bore **202**, such as in a radial seal bore **512**. Additionally, or in the alternative, the seal housing **200** and/or the coupling assembly **106** may include a seal shroud **128** seated in a respective one of the at least one seal bore **202**, such as in the radial seal bore **512**. In some embodiments, the seal shroud **128** may be distally adjacent to a ring seal **126**. In some embodiments, a seal shroud **128** seated in a seal bore **202** may extend outward in an axially distal direction beyond the axially distal surface **212** of the seal housing **200**. The seal shroud **128** and/or the one or more ring seals **126** may define at least part of a seal assembly **124** (see, e.g., FIGS. **1**C and **1**D). Additionally, or in the alternative, the one or more ring seals **126** seated in a seal bore **202** may represent additional sealing elements beyond the sealing elements provided as the seal assembly **124**. In some embodiments, the seal shroud **128** may define a sealing element with respect to the seal housing. The one or more ring seals **126** and/or the seal shroud **128** may include at least one of: a lap seal, a rib seal, an o-ring seal, a wiper seal, or an s-seal.

[0134] In addition to the one or more sealing elements seated in the at least on seal bore **202**, the seal housing **200** and/or the coupling assembly **106** may include one or more sealing elements, such as one or more ring seals, respectively seated in a corresponding one of at least one of seal groove **222** situated circumferentially about a radially outward surface **224** of the seal housing **200**, such as a radially outward surface **224** of the sleeve portion **208** of the seal housing **200**. In some embodiments the one or more sealing elements situated circumferentially about a radially outward surface **224** of the seal housing **200** may include a primary outward proximal seal **518** seated in a primary outward proximal seal groove **230** (see, e.g., FIGS. **2**A-**2**C). In some embodiments, the seal housing **200** may additionally include a secondary outward proximal seal **520** seated in a secondary outward proximal seal groove **232** (see, e.g., FIGS. **2**A-**2**C). In some embodiments, the seal housing **200** may additionally include a tertiary outward proximal seal **522** seated in a tertiary outward proximal seal groove **234** (see, e.g., FIGS. **2**A-**2**C). Additionally, or in the alternative, the one or more sealing elements situated circumferentially about a radially outward surface **224** of the seal housing **200** may include at least one outward distal seal **524** seated in an outward distal seal groove **236** (see, e.g., FIGS. **2**A-**2**C). The one or more sealing elements, such as the one or more ring seals, situated circumferentially about the radially outward surface **224** of the seal housing **200** may include an o-ring, a wiper seal, an s-seal, or a combination of these.

[0135] In some embodiments, as shown in FIGS. **5**A-**5**F, the coupling assembly **106** may include at least one sealing element, such as a gasket **526**, positioned within the seal housing-receiving bore **500** proximally adjacent to the seal

housing **200**. The at least one sealing element, such as the gasket **526**, may provide a sealing interface between an axially proximal surface **528** of the seal housing **200** and one or more proximally adjacent elements of the coupling assembly **106** and/or a proximally adjacent portion of a pipe segment **102**, such as a distal end of one or more layers of a flexible pipe segment **300**.

[0136] When the coupling assembly **106** is coupled to a counterpart fitting **110**, an axial and/or radial load upon the axially distal surface **212** of the seal housing **200** may tighten the sealing interface between the axially proximal surface **528** of the seal housing **200** and the coupling assembly **106** and/or between the axially proximal surface **528** of the seal housing **200** the proximally adjacent portion of a pipe segment **102**, including, for example, the sealing interface provided by the at least one sealing element, such as the gasket **526**. In some embodiments, the axial and/or radial load upon the seal housing **200** resulting from coupling the coupling assembly to a counterpart fitting **110** may tighten a sealing interface between the seal housing **200** and the seal housing-receiving bore **500**, such as between the radially outward surface **224** of the seal housing **200** and the flange-receiving bore **504** and/or the sleeve-receiving bore **502**. The axial and/or radial load upon the seal housing **200** may also tighten a sealing interface provided by the one or more sealing elements situated circumferentially between the seal housing **200** and the seal housing-receiving bore **500**. For example, the axial and/or radial load resulting from coupling the coupling assembly to a counterpart fitting **110** may cause the seal housing **200** to expand circumferentially and/or to compress axially, thereby tightening one or more sealing interfaces associated with the seal housing **200** and/or the coupling assembly. In some embodiments, a taper defining a decreasing diameter along a longitudinally proximal direction of the seal housing-receiving bore **500** may contribute to a tighter sealing interface. Additionally, or in the alternative, when the coupling assembly **106** is coupled to a counterpart fitting **110**, an axial and/or radial load upon the one or more sealing elements seated in the radial seal bore **512** may tighten a sealing interface between the radial seal bore **512** and the one or more sealing elements seated in the radial seal bore **512**. Additionally, or in the alternative, a load upon the one or more sealing elements seated in the radial seal bore **512** may translate to the seal housing **200**, and/or a load upon the seal housing **200** may translate to the one or more sealing elements seated in the radial seal bore **512**, thereby tightening one or more corresponding sealing interfaces.

[0137] Referring to FIG. **5**A, in some embodiments, a coupling assembly **106** may include a cannula ring **436** located proximally adjacent to the seal housing **200**. The cannula ring **436** may be positioned within the pipe segment-receiving bore **406** and/or the within the seal housing-receiving bore **500**. The cannula ring may be positioned between the seal housing **200** and a cannula **412**. In some embodiments, one or more sealing elements, such as a gasket **526**, may be situated adjacently between the seal housing **200** and the cannula ring **436**. The one or more sealing elements, such as the gasket **526**, may define a sealing interface between the distal cannula ring-face **442** and the axially proximal surface **528** of the seal housing **200**.

[0138] In some embodiments, a portion of the cannula ring-face **442** may abut the cannula ring-receiving rim **454** and a portion of the cannula ring-face **442** may abut the one or more sealing elements, such as the gasket **526**. The cannula ring **436** may interface with a cannula **412**, one or more layers of a flexible pipe segment **300**, and/or one or more other components of the coupling assembly **106**, for example, as described with reference to FIG. **4**A. In some embodiments, the cannula ring **436** may include a cannula-receiving seat **446** configured to receive a radially outward cannula-surface **416** of the cannula **412**. Additionally, or in the alternative, the cannula ring **436** may include a cannula-receiving rim **448** configured to receive a distal cannula-face **418** of the cannula **412**. Additionally, or in the alternative, the cannula ring **436** may include a distal cannula ring-face **442** configured to face the seal housing **200** and/or the one or more sealing elements, such as the gasket **526**.

[0139] Referring to FIG. **5**B, in some embodiments, a coupling assembly **106** may include a cannula **412** located proximally adjacent to the seal housing **200**. The cannula **412** may be positioned within the pipe segment-receiving bore **406** and/or the within the seal housing-receiving bore **500**. The seal housing **200** may provide sufficient axial support to the cannula **412**, to one or more layers of a flexible pipe segment **300**, and/or to one or more other components of the coupling assembly **106**, such that the cannula ring **436**, such as shown in FIG. **5**A, may be omitted from the coupling assembly **106**. The cannula ring **436** shown in FIG. **5**A may be formed, e.g., machined, to a particular tolerance level to provide a suitable interface with the cannula **412** and/or the one or more layers of a flexible pipe segment **300**. By omitting the cannula ring **436**, a cost savings may be realized as a result of fewer parts and/or reduced manufacturing time. Additionally, or in the alternative, the configuration shown in FIG. **5**B may provide an enhanced sealing interface between the seal housing **200** and the cannula **412** and/or the one or more layers of a flexible pipe segment **300**.

[0140] In some embodiments, one or more sealing elements, such as a gasket **526**, may be situated adjacently between the seal housing **200** and the cannula **412**. The one or more sealing elements, such as the gasket **526**, may define a sealing interface between the cannula **412** and the seal housing **200**, such as between the distal cannula-face **418** of the cannula **412** and the axially proximal surface **528** of the seal housing **200**. In some embodiments, at least part of the distal cannula-face **418** may abut the one or more sealing elements, such as the gasket **526**. In some embodiments, the sleeve-receiving bore **502** may smoothly transition to the pipe segment-receiving bore **406** of the end casing **108**. In some embodiments, one or more layers of the flexible pipe segment **300**, such as an inward sheath **306**, may abut the one or more sealing elements, such as the gasket **526**.

[0141] Referring, for example, to FIGS. **5**A and **5**B, in some embodiments, the seal housing **200** and the cannula **412**, and/or the seal housing **200** and the cannula ring **436**, may have a substantially identical inward diameter. For example, the seal housing **200** may include a first inward diameter and the cannula **412** may include a second inward diameter, and the first inward diameter and the second inward diameter differ from one another by less than 1.0 millimeter. Additionally, or in the alternative, the cannula ring **436** may include a third inward diameter, and the first inward diameter and the third inward diameter may differ from one another by less than 1.0 millimeter.

[0142] Referring to FIGS. **5**C and **5**D, in some embodiments, a seal housing **200** may include a cannula extension

530 defining a proximal portion of the seal housing **200**. The cannula extension **530** may be circumferentially surrounded by one or more layers of a flexible pipe segment **300**, such as an inward sheath **306** of an unbonded flexible pipe segment **302**. As shown in FIG. **5**C, the cannula extension **530** may support a distal portion of the inward sheath **306**. A radially inward surface of the inward sheath may abut a radially outward surface of the cannula extension **530**. In some embodiments, as shown in FIG. **5**D, a coupling assembly **106** may include a cannula **412** circumferentially surrounding the cannula extension **530** of the seal housing **200**. Additionally, or in the alternative, as shown, the coupling assembly **106** may include a cannula ring **436** circumferentially surrounding the cannula extension **530** of the seal housing **200**. A radially inward surface of the cannula **412** and/or a radially inward surface of the cannula ring **436** may abut the radially outward surface of the cannula extension **530**. A radially inward surface of the inward sheath may abut a radially outward surface of the cannula **412**. The cannula extension **530** may support the cannula **412** and/or the cannula ring **436**. The cannula **412** and/or the cannula ring **436**, supported by the cannula extension **530**, may support a distal portion of the inward sheath **306**. Additionally, or in the alternative, in some embodiments, the cannula **412** and/or the cannula ring **436** may define an integrally formed portion of the cannula extension **530** or may be permanently coupled to the cannula extension **530**.

[0143] Referring to FIGS. **5**E and **5**F, in some embodiments, a coupling assembly **106** may include a seal housing **200** located distally adjacent to a carcass layer **314** of a flexible pipe segment **300**. The flexible pipe segment **300** may include an unbonded flexible pipe segment **302** (FIG. **5**E) or a bonded flexible pipe segment **304** (FIG. **5**F). As shown in FIG. **5**E, in some embodiments, a flexible pipe segment **300**, such as an unbonded flexible pipe segment **302**, may include a cannula ring **436** situated adjacently between the seal housing **200** and inward sheath **306** of the unbonded flexible pipe segment **302**. In some embodiments, as shown in FIGS. **5**E and **5**F, one or more sealing elements, such as a gasket **526**, may be situated adjacently between the seal housing **200** and a distal end of the carcass layer **314**. The one or more sealing elements, such as the gasket **526**, may define a sealing interface between the axially proximal surface **528** of the seal housing **200** and the distal end of the carcass layer **314**. Additionally, or in the alternative, the one or more sealing elements, such as the gasket **526**, may define a sealing interface between the axially proximal surface **528** of the seal housing **200** and the cannula ring **436**.

[0144] Referring now to FIGS. **6**A-**6**H, example seal housing-couplings **506** are described. Additionally, example seal assemblies **124** are further described. As shown in FIGS. **6**A-**6**H, a seal housing **200** may be coupled to an end casing **108** by one or more seal housing-couplings **506**. As shown, for example, in FIG. **6**A, the seal housing-coupling **506** may include a plurality of seal housing-bolts **600**. Additionally, or in the alternative, as shown in FIG. **6**B, the seal housing-coupling **506** may include one or more mating pairs of helical threads **602** defined by a radially outward surface **224** of the seal housing **200** and the seal housing-receiving bore **500**. In some embodiments, the helical threads **602** may be included on at least a portion of the flange-receiving bore **504** and a corresponding part of the flange portion **210** of the seal housing **200**.

[0145] As shown in FIGS. **6**A and **6**B, in some embodiments the flange portion **210** of the seal housing **200** may define a plurality of seal housing-bolt holes **218**. The plurality of seal housing-bolts **600** may be respectively secured in a corresponding end casing-bolt hole **508** defined by the end casing **108** of the coupling assembly **106**. Additionally, or in the alternative, as shown in FIGS. **6**E-**6**H, the plurality of seal housing-bolts **600** may be respectively secured between a partial seal housing bolt-hole **604** defined by a radially outward surface **224** of the seal housing **200** and a corresponding partial end casing-bolt hole **606** defined by the flange-receiving bore **504**.

[0146] In some embodiments, as shown in FIGS. **6**B, **6**D, **6**F, and **6**H, a seal housing **200** may define a plurality of blind holes **220** configured to receive a tool for installing and/or removing the seal housing **200** from the seal housing-receiving bore **500** of the end casing **108**. Referring further to FIGS. **6**A-**6**H, a seal housing may include at least one seal bore **202** that extends from an axially distal surface **212** of the seal housing-body **204**. As shown in FIGS. **6**A and **6**B, and FIGS. **6**E and **6**F, in some embodiments, the at least one seal bore **202** may include a radial seal bore **512**. Additionally, or in the alternative, as shown in FIGS. **6**C-**6**H, the at least one seal bore **202** may include an axial seal bore **608** defined by the axially distal surface **212** of seal housing **200**, such as an axially distal surface **212** of the flange portion **210** of the seal housing **200**.

[0147] As shown in FIGS. **6**A and **6**B, and FIGS. **6**E and **6**F, in some embodiments, the coupling assembly **106** and/or the seal housing **200** may include at least one radial seal element **610**. The at least one radial seal element **610** may be seated in the radial seal bore **512**. For example, the at least one radial seal element **610** may include a ring seal **126** and a seal shroud **128**. The ring seal **126** may be located proximally adjacent to the seal shroud **128**. In some embodiments, a radial seal element **610**, such as a ring seal **126** or a seal shroud **128**, may include a proximal seal surface seated in a seal bore **202** and a distal seal surface in contact with the counterpart fitting **110**, for example, as shown in FIGS. **1**C and **1**D. Additionally, or in the alternative, a radial seal element **610**, such as a ring seal **126** or a seal shroud **128**, may include a proximal seal surface in contact with the seal housing **200** and a distal seal surface in contact with the counterpart fitting **110**, for example, as shown in FIGS. **1**C and **1**D. For example, a seal assembly **124** may include a ring seal **126**, such as a radial seal element **610** and/or an axial seal element **614**, that circumferentially surrounds the seal shroud **128**, for example, as shown in FIGS. **1**C and **1**D. In some embodiments, the radial seal element **610** may include a lap seal or a rib seal. Additionally, or in the alternative, a first radial seal element **610**, such as the ring seal **126**, may be seated against a seal-receiving seat **514** defining a radially inward surface of the seal housing **200**, and against a seal-receiving rim **516** defining an axially inset surface of the seal housing **200**. A second radial seal element **610**, such as the seal shroud **128**, may include a proximal portion seated in the seal bore **202** and a distal portion in contact with a counterpart fitting **110**, for example, as shown in FIGS. **1**C and **1**D. The second radial seal element **610**, such as the seal shroud **128**, may be seated against the seal-receiving seat **514**, and against an axially distal portion of the first radial seal element **610**, such as the ring seal **126**. A third radial seal element **610**, such as a ring seal **126**, may

circumferentially surround the seal shroud **128**, for example, as shown in FIGS. **1**C and **1**D.

[0148] In some embodiments, as shown, a radial seal element **610**, such as the ring seal **126**, may include one or more anti-extrusion elements **612**. The one or more anti-extrusion elements **612** may inhibit malformation of the radial seal element **610** under axial and/or radial loads. By way of example, the one or more anti-extrusion elements **612** may include garter springs, rings, or the like. In some embodiments, a radial seal element **610**, such as a ring seal **126** may include one or more anti-extrusion elements **612** encapsulated within the radial seal element **610**. The one or more anti-extrusion elements **612** may facilitate bi-directional sealing of a radial seal element **610**, such as a ring seal **126**, such as with respect to the radial seal bore **512** and the seal-receiving rim **516** defined by the seal housing **200**. In some embodiments, a ring seal **126** that includes one or more anti-extrusion elements **612** may be configured as an s-seal.

[0149] As shown in FIGS. **6**C and **6**D, FIGS. **6**E and **6**F, and FIGS. **6**G and **6**H, in some embodiments, the coupling assembly **106** and/or the seal housing **200** may include at least one axial seal element **614**. The at least one axial seal element **614** may be seated in an axial seal bore **608** defined by an axially distal surface **212** of the seal housing **200**. The axial seal element **614** may provide a sealing interface with one or more surfaces defined by a counterpart fitting **110**, such as hub **116** defined by the counterpart fitting **110**. The one or more ring seals, such as the at least one radial seal element **610** and/or the at least one axial seal element **614**, may respectively include at least one of: a lap seal, a rib seal, an o-ring seal, a wiper seal, or an s-seal.

[0150] In some embodiments, the axial seal element **614** may define a portion of a seal assembly **124** configured to fluidically seal a seal assembly-interface **127**, such as an interface with the counterpart fitting **110**. Additionally, or in the alternative, in some embodiments, the axial seal element **614** may interface with one or more additional seal elements of a seal assembly **124**, such as a ring seal **126** and/or a seal shroud **128**. Additionally, or in the alternative, as shown in FIGS. **6**E and **6**F, a coupling assembly **106** and/or the seal housing **200** may include at least one radial seal element **610** seated in a radial seal bore **512**, and at least one axial seal element **614** seated in an axial seal bore **608**. In some embodiments, a coupling assembly **106** and/or the seal housing **200** may include a first radial seal element **610** and a second axial seal element **614**. The first radial seal element **610** may be proximally adjacent to a seal shroud **128**. The second axial seal element **614** may circumferentially surround the seal shroud, as shown, for example, in FIGS. **1**C and **1**D. The first radial seal element **610** may include an o-ring or an s-seal. The second axial seal element **614** may include a lap seal or a rib seal.

[0151] Referring now to FIGS. **7**A and **7**B, and FIG. **8**, example fluid flowing systems are described. In some embodiments, as shown in FIGS. **7**A and **7**B, a fluid flowing system may include a petroleum extraction station **700**, such as a land-based petroleum extraction station (FIG. **7**A) or an underwater petroleum extraction station (FIG. **7**B). A petroleum extraction station **700** may include one or more pipe assemblies **100** configured according to the present disclosure. For example, various pipe assemblies **100** included in a petroleum extraction station **700**, such as a land-based petroleum extraction station (FIG. **7**A) or an underwater petroleum extraction station (FIG. **7**B), may include one or more flexible pipe segments **300**, such as one or more unbonded flexible pipe segments **302** and/or one or more bonded flexible pipe segments **304**. Additionally, or in the alternative, one or more of the pipe assemblies **100** may include one or more pipe segments **102** that have a rigid or inflexible configuration.

[0152] A pipe assembly **100** included in or that defines a portion of a land-based petroleum extraction station (FIG. **7**A) or an underwater petroleum extraction station (FIG. **7**B) may include one or more pipe segments **102** that has a coupling assembly **106** couplable to a counterpart fitting **110**. The coupling assembly **106** may include a seal housing **200**. The coupling assembly **106** of a pipe segment **102** may be coupled to a counterpart fitting **110**. The counterpart fitting may define a portion of a fluid flowing system associated with the petroleum extraction station **700**. Additionally, or in the alternative, the counterpart fitting **110** may define a coupling assembly **106** of another pipe segment **102**. For example, a petroleum extraction station **700** may include a plurality of pipe segments **102** coupled to one another at least in part by a coupling assembly **106**, such as a coupling assembly that includes a seal housing **200**, respectively configured according to the present disclosure.

[0153] By way of example, the petroleum extraction station **700** depicted in FIG. **7**A may include a well fracking system. Additionally, or in the alternative the petroleum extraction station **700** may include any other systems or equipment for land-based petroleum extraction. As shown in FIG. **7**A, the petroleum extraction station **700** may include a plurality of frac trees **702** respectively installed over a corresponding well bore (not shown). A diverter valve system **704** may be configured to selectively connect a well servicing apparatus to one or more of the frac trees **702** while venting pressure from one or more of the other frac trees **702**. The land-based petroleum extraction station may include a plurality of flexible pipe segments **300** that fluidly couple a respective frac tree **702** to the diverter valve system **704**. The respective frac trees **702** and/or the diverter valve system **704** may include a counterpart fitting **110** to which a coupling assembly **106** of a flexible pipe segment **300** may be coupled.

[0154] As another example, the petroleum extraction station **700** depicted in FIG. **7**B may include an underwater extraction station. As shown in FIG. **7**B, a petroleum extraction station **700**, such as an underwater extraction station, may include a plurality of underwater pipelines **748**. One or more of the underwater pipelines **748** may include a pipe assembly **100** configured according to the present disclosure.

[0155] As shown in FIG. **7**B, petroleum extraction station **700**, such as an underwater extraction station, a may include one or more containment assemblies **750** fluidly coupled to a wellbore (not shown). The containment assembly **750** may be coupled to a subsea manifold **752** by way of one or more flexible pipe segments **300**. The manifold may be configured to distribute fluids produced from the containment assembly **750** to one or more riser assemblies **754** that transport fluid to one or more fluid capture vessels **756**. A riser assembly **754** may respectively include one or more pipe segments **102**. For example, in some embodiments, a riser assembly **754** may include a rigid riser **758** that includes one or more pipe segments **102** that have an inflexible or rigid configuration. Additionally, or in the alternative, a riser assembly

754 may include one or more flexible pipe segments **300**. As shown, one or more flexible pipe segments **300** may be coupled to respective ends of a rigid riser **758**. Fluid may flow through a first one or more flexible pipe segments **300** to the rigid riser **758**, and from the rigid riser **758** to a second one or more flexible pipe segments **300** coupled to the one or more fluid capture vessels **756**. Additionally, or in the alternative, one or more flexible pipe segments may transfer fluid from a subsea manifold **752** directly to a fluid capture vessel **756**. In some embodiments, a petroleum extraction station **700** may include a plurality of flexible pipe segments **300** coupled to one another in series, such as between a subsea manifold **752** and a fluid capture vessel **756**.

[0156] In some embodiments, a petroleum extraction station **700**, such as an underwater extraction station, may include one or more accumulators **760**. An accumulator may be configured to regulate process fluid pressure by expanding and contracting a regulation chamber and a process fluid chamber that are separated from one another by a bladder, a piston, or the like. One or more pipe segments **102**, such as one or more flexible pipe segments **300**, may couple the process fluid chamber of the accumulator **760** to the containment assembly **750** and/or to the subsea manifold **752**.

[0157] As further shown in FIG. 7B, a petroleum extraction station **700**, such as an underwater extraction station, may include one or more umbilical termination units **762**. The umbilical termination unit **762** may include an electro-hydraulic system that allows a plurality of subsea control modules to be connected to a common source for communications, electrical, and hydraulic supply lines. An integrated service umbilical **764** may be coupled between the umbilical termination unit **762** and fluid capture vessel **756**. The integrated service umbilical **764** may include a multi-bore configuration that includes at least one flexible pipe segment **300**, such as a plurality of sequentially coupled flexible pipe segments **300**.

[0158] In some embodiments, a petroleum extraction station **700**, such as an underwater extraction station, may include a dispersant injection system **766**. The dispersant injection system **766** may be configured to supply a chemical dispersing agent to a petroleum discharge source or site, such as the containment assembly **750**. The chemical dispersing agent may aid in breaking up petroleum solids and liquids by reducing the interfacial tension between oil and water. The chemical dispersing agent may be supplied to the dispersant injection system **766** from a dispersant vessel **768**, such as by one or more dispersant supply lines **770**. The one or more dispersant supply lines **770** may include one or more pipe segments **102**, such as one or more flexible pipe segments **300**. Additionally, or in the alternative, the dispersant injection system **766** may provide the chemical dispersing agent to the petroleum discharge source or site at least in part by way of one or more pipe segments **102**, such as one or more flexible pipe segments **300**.

[0159] Additionally, or in the alternative, a petroleum extraction station **700**, such as an underwater extraction station, may include a hydrate inhibitor injection system **772**. The hydrate inhibitor injection system **772** may be configured to supply a hydrate inhibiting agent to the containment assembly **750** or other locations of the petroleum extraction station **700**. The hydrate inhibiting agent may inhibit the formation of gas hydrates, which may form an ice-like solid material that may plug process equipment. The hydrate inhibiting agent may include a thermodynamic inhibitor, a kinetic hydrate inhibitor, an anti-agglomerant inhibitor, or a combination of these. The hydrate inhibiting agent may be supplied to the hydrate inhibitor injection system **772** from a hydrate inhibiting agent vessel **774**, such as by one or more hydrate inhibiting agent supply lines **776**. The one or more hydrate inhibiting agent supply lines **776** may include one or more pipe segments **102**, such as one or more flexible pipe segments **300**. Additionally, or in the alternative, the hydrate inhibitor injection system **772** may provide the hydrate inhibiting agent to the containment assembly **750** at least in part by way of one or more pipe segments **102**, such as one or more flexible pipe segments **300**.

[0160] In some embodiments, a petroleum extraction station **700**, such as an underwater extraction station, may include a containment top-hat **778** configured to interface with a containment assembly **750**. The containment top-hat **778** may be configured to contain and/or capture fluid from the containment assembly **750**. The containment top-hat may be coupled to one or more pipe segments **102** configured to supply fluid captured by the containment top-hat **778** to a fluid capture vessel **756** and/or a support vessel **780**.

[0161] In some embodiments, a fluid capture vessel **756** and/or a support vessel **780** may be configured to transfer fluid to a tanker vessel **782**, such as by one or more flexible pipe segments **300**. In some embodiments, the flexible pipe segments **300** may be configured to float. For example, the flexible pipe segments **300** may include one or more buoyancy layers formed of a low-density material such as open or closes cell foam.

[0162] Referring now to FIG. **8**, in some embodiments, a fluid flowing system may include a fluid transfer station **800**. The fluid transfer station **800** may include a pumping station **802**. The pumping station **802** may include one or more pumps **804**. Additionally, or in the alternative, the fluid transfer station **800** may include a transfer manifold **806** that includes one or more counterpart fittings **110** to which a pipe assembly **100** may be coupled. The pipe assembly **100** may define at least a portion of the fluid transfer station **800** or the pipe assembly **100** may be utilized in connection with a fluid flowing process associated with the fluid transfer station **800**. The pipe assembly **100** may include one or more pipe segment **102**, such as a flexible pipe segment **300**. For example, one or more flexible pipe segments **300** may be coupled to a counterpart fitting **110** at the transfer manifold **806**, such as at a first coupling assembly **106** that includes an end casing **108** coupled to a first end of the flexible pipe segment **300**. Additionally, or in the alternative, a second coupling assembly **106** at a second end of the flexible pipe segment **300** may include an end casing **108** coupled to a counterpart fitting **110** of a vehicle **808** that includes a fluid tank **810**, such as a tanker truck (as shown), or a marine vessel, an aircraft, or a rail car. The respective end casings **108** may include a seal housing **200** configured in accordance with the present disclosure. Additionally, or in the alternative, the pumping station **802** and/or the transfer manifold **806** may include one or more pipe segments **102** that include an end casing **108** with a seal housing **200** configured in accordance with the present disclosure. The fluid transfer station may be configured to pump fluid from the transfer manifold **806** to the fluid tank **810** of the vehicle **808**, and/or from the fluid tank **810** of the vehicle to the fluid transfer manifold **806**.

[0163] In some embodiments, the fluid transfer station **800** may be implemented in connection with a petroleum extraction station **700**. For example, the fluid transfer station **800** may be configured to transfer a petroleum fluid from the transfer manifold **806** to the fluid tank **810**. Additionally, or in the alternative, the fluid transfer station **800** may be configured to transfer a process fluid, such as a chemical dispersing agent, a hydrate inhibiting agent, or other process fluids. In some embodiments, the fluid transfer station **800** may be configured to transfer a fuel. In some embodiments, the fluid transfer station **800** may be configured to transfer a water.

[0164] In some embodiments, a pipe segment **302**, such as a flexible pipe segment **300**, may be configured and/or operated according to the Norwegian university of Science and Technology, Handbook on Design and Operation of Flexible Pipes, 2017, the entirety of which is incorporated by reference herein as if set forth verbatim. Additionally, or in the alternative, a pipe segment **302**, such as a flexible pipe segment **300**, may include a marine offloading hose configured according to the Oil Companies International Marine Forum, Guide to Manufacturing and Purchasing Hoses for Offshore Moorings, 5th Edition, the entirety of which is incorporated by reference herein as if set forth verbatim.

[0165] In some embodiments, the plurality of flexible pipe segments **300** included in a fluid flowing system, such as a petroleum extraction station **700** or a fluid transfer station **800**, may include a COFLEXIP® unbonded flexible pipe segments **302**, available from TechnipFMC, Paris, France. Additionally, or in the alternative, the plurality of flexible pipe segments **300** included in a fluid flowing system may include one or more other configurations in accordance with the present disclosure. Further, a fluid flowing system may include one or more pipe segments **200** that have inflexible or rigid configuration.

[0166] Referring now to FIG. **9**, example pipe assemblies **100** are further described. fluid flowing system may include a fluid transfer station **800**. As shown in FIG. **9**, a pipe assembly **100** may include a pipe segment **102** that includes a coupling assembly **106** at respective opposite ends of the pipe segment **102**. A coupling assembly **106** at a respective end of the pipe segment **102** may be coupled to the pipe segment **102**. Additionally, or in the alternative, as shown in FIG. **9**, a coupling assembly **106** at a respective end of the pipe segment **102** may be integral with the pipe segment **102**. The coupling assembly **106** may include an end casing **108** that includes a seal housing **200**. The coupling assembly **106**, the end casing **108**, and/or the seal housing **200** may be configured in accordance with the present disclosure. In some embodiments, at least one coupling assembly **106** of the pipe assembly **100** may include a cannula **412** and/or a cannula ring **436**. Additionally, or in the alternative, the cannula **412** and/or the cannula ring **436** may be omitted from at least one coupling assembly **106**.

[0167] The pipe assembly **100** may include a least one seal bore **202** extending from an axially distal surface **212** of the seal housing **200** (see, e.g., FIGS. **2**A-**2**C). The coupling assembly **106** may include at least one radial seal element **610**. The at least one radial seal element **610** may be seated in the radial seal bore **512** (see, e.g., FIGS. **5**A-**5**F). As shown, the at least one radial seal element **610** may include a seal shroud **128**, a first ring seal **126** axially adjacent to a proximal side **902** the seal shroud **128** and a second ring seal **126** axially adjacent to a distal side **904** of the seal shroud **128**. Additionally, or in the alternative, the coupling assembly may include at least one axial seal element **614**. As shown, an axial seal element **614** may be situated between respectively adjacent hubs **116** of a hub clamp interface **112**. Additionally, or in the alternative, an axial seal element **614** may be situated between respectively adjacent flanges of a flange interface (see, e.g., FIG. **1**D). As shown in FIG. **9**, the axial seal element **614** may circumferentially surround the seal shroud **128**. The radial seal elements **610** and the axial seal element **614** may respectively include a lap seal, a rib seal, an o-ring seal, a wiper seal, or an s-seal. For example, the radial seal elements **610**, such as the ring seals **126**, may include an o-ring seal, a wiper seal, or an s-seal. Additionally, or in the alternative, the axial seal element **614** may include a lap seal or a rib seal.

[0168] As shown in FIG. **9**, in some embodiments, the counterpart fitting **110** may include a fitting adapter **906**. The fitting adapter **906** may transition the counterpart fitting **110** from a hub **116** of an end casing **108** to a corresponding flange of a fluid flowing system. The fitting adapter **906** may include an adapter hub **908** and an adapter flange **910** that may be coupled to the corresponding flange of the fluid flowing system. The adapter hub **908** may be couplable to the hub **116** of the end casing **108** by a hub clamp interface **112** (see, e.g., FIG. **1**C). In some embodiment, a first adapter flange **910** may be configured to be coupled to a frac tree **702** of a petroleum extraction station **700** (FIG. **7**A). In some embodiment, a second adapter flange **910** may be configured to be coupled to a diverter valve system **704** of the petroleum extraction station **700** (FIG. **7**A). In some embodiments, the pipe assembly **100** shown in FIG. **9** may be or define at least a portion of a pup joint, a save sub, a spacer and pup, or the like, which, for example, may be configured to space out flexible pipe segments **102** at a fluid flowing system such as a petroleum extraction station **700**.

[0169] Referring now to FIGS. **10**A and **10**B, example methods of installing a seal housing **200** in an end fitting **107** of a coupling assembly **106**, and example methods of coupling a pipe assembly **100** or a pipe segment **102** to a fluid flowing system, are respectively described.

[0170] As shown in FIG. **10**A, a method **1000** of installing a seal housing **200** in an end fitting **107** of a pipe segment **102** or pipe assembly **100** may include, at block **1002**, forming an end casing **108** by forming a seal housing-receiving bore **500** in an end fitting **107** of a coupling assembly **106** for a pipe segment **102**. At block **1004**, the method **1000** may include installing the seal housing **200** in the seal housing-receiving bore **500**. The seal housing-receiving bore **500** may extend longitudinally through the end fitting **107**. The seal housing **200** may define at least one seal bore **202** extending from an axially distal surface **212** of the seal housing **200**. In some embodiments, upon having installed the seal housing **200** in the seal housing-receiving bore **500**, an inward diameter defined by the seal housing **200** may be within 1.0 millimeter of an inward diameter of a fluid flowpath **400**, a cannula **412**, and/or a cannula ring **436** of the coupling assembly **106**. In some embodiments, the seal housing **200** may fit within the seal housing-receiving bore with a circumferential clearance of from 10 to 100 micrometers. The circumferential clearance may be determined with respect to at least one longitudinal position of the seal housing **200**.

[0171] In some embodiments, forming a seal housing-receiving bore **500** (block **1002**) may include, at block **1006**,

increasing an inward diameter of at least a distal portion of a fluid flowpath **400** defined by the end fitting **107**. The fluid flowpath **400** may extend longitudinally through the end fitting **107**. Additionally, or in the alternative, forming the seal housing-receiving bore **500** (block **1002**) may include, at block **1008**, forming a sleeve-receiving bore **502** and a flange-receiving bore **504**. The sleeve-receiving bore **502** may be configured to receive a sleeve portion **208** of the seal housing **200**, and the flange-receiving bore **504** may be configured to receive a flange portion **210** of the seal housing **200**.

[0172] In some embodiments, the method **1000** of installing a seal housing **200** may include, at block **1010**, forming a plurality of seal housing-bolt holes **218** in a distal flange face **510** of the flange-receiving bore **504**, and coupling the seal housing **200** to the end casing **108** with a plurality of seal housing-bolts **600** respectively installed in a corresponding one of the plurality of seal housing-bolt holes **218**. Additionally, or in the alternative, the method **1000** of installing a seal housing **200** may include, at block **1012**, forming a first one or more helical threads **602** in the flange-receiving bore **504**, and coupling the seal housing **200** to the end casing **108** with a second one or more helical threads **602** defined by the seal housing **200**, with the first one or more helical threads **602** configured to interface with the second one or more helical threads **602**.

[0173] In some embodiments, the method **1000** may include, at block **1014**, removing the seal housing **200** after a period of service, and replacing the seal housing **200** with a replacement seal housing **200**. Additionally, or in the alternative, the method **1000** may include, at block **1016**, removing a cannula ring **436** from the coupling assembly **106** prior to installing the seal housing **200**. A proximal portion of the seal housing **200**, when installed in the seal housing-receiving bore **500**, may occupy a space previously occupied by the cannula ring **436**. Additionally, or in the alternative, the method **1000** may include, at block **1018**, replacing the cannula ring **436** with a replacement cannula ring **436**. In some embodiments, the replacement cannula ring **436** may have a larger inward diameter than the cannula ring **436** removed from the coupling assembly **106**. In some embodiments, the seal housing **200** may include a cannula extension **530**, and the cannula extension **530** may occupy at least a portion of a space previously occupied by the cannula ring **436** removed from the coupling assembly **106**.

[0174] Additionally, or in the alternative, the method **1000** may include, at block **1020**, removing a cannula **412** from the coupling assembly **106** prior to installing the seal housing **200**. In some embodiments, a proximal portion of the seal housing **200**, when installed in the seal housing-receiving bore **500**, may occupy at least a portion of a space previously occupied by the cannula **412**. Additionally, or in the alternative, the method **1000** may include, at block **1022**, replacing the cannula **412** with a replacement cannula **412**. In some embodiments, the replacement cannula **412** may have a larger inward diameter than the cannula **412** removed from the coupling assembly **106**. In some embodiments, the seal housing **200** may include a cannula extension **530**, and the cannula extension **530** may occupy at least a portion of a space previously occupied by the cannula **412** removed from the coupling assembly **106**.

[0175] In some embodiments, the method **1000** may include, at block **1024**, positioning a gasket **526** within the seal housing-receiving bore **500** prior to installing the seal housing **200** in the seal housing-receiving bore **500**. The gasket **526** may be situated proximally adjacent to the seal housing **200** when positioned within the seal housing-receiving bore **500**.

[0176] As shown in FIG. **10**B, a method **1050** of coupling a pipe assembly **100** to a fluid flowing system may include, at block **1052**, positioning an end fitting **107** of a coupling assembly **106** adjacent to a counterpart fitting **100** of the fluid flowing system. The end fitting **107** may include an end casing **108** defining a seal housing-receiving bore **500**, and a seal housing positioned within the seal housing receiving bore **500**. At block **1054**, the method **1050** may include coupling the end casing **108** of the end fitting **107** to the counterpart fitting **110**, with the seal housing providing a sealing interface. In some embodiments, such as in the example method **1050**, the coupling assembly **106** may include a seal housing-receiving bore **500** defined by the end casing **108**, a seal housing **200** positioned within the seal housing-receiving bore **500**. The seal housing-receiving bore **500** extends longitudinally through the end casing **108**. The seal housing **200** defines at least one seal bore **202** extending from an axially distal surface **212** of the seal housing **200**. In some embodiments, such as in the example method **1050**, the coupling assembly **106** may further include one or more ring seals **126** seated in a respective one of the at least one seal bore **202**. The one or more ring seals **126** may provide a sealing interface between the seal housing **200** and the counterpart fitting **110**. In some embodiments, the method **1050** may include, at block **1056**, removing the seal housing **200** after a period of service and replacing the seal housing **200** with a new or replacement seal housing. In various embodiments, the method **1050** may be performed with respect to a counterpart fitting **110** that defines part of at least one of a petroleum extraction station, a fluid transfer station, or the like.

[0177] In some embodiments, the end casing **108** may include a first hub **116***a* and the counterpart fitting may include a second hub **116***b*, and block **1054** of the method **1050** (coupling the end casing **108** of the coupling assembly **106** to the counterpart fitting **110**) may include, at block **1058**, clamping the first hub **116***a* and the second hub **116***b* with a hub clamp interface **112**. In some embodiments, the end casing **108** may include a first flange **118***a* and the counterpart fitting **110** may include a second flange **118***b*, and block **1054** of the method **1050** (coupling the end casing **108** of the coupling assembly **106** to the counterpart fitting **110**) may include, at block **1060**, bolting the first flange **118***a* and the second flange **118***b* to one another with a plurality of flange-bolts **120**.

[0178] In various embodiments, the method **1000** described with reference to FIG. **10**A and/or the method **1050** described with reference to FIG. **10**B may be performed with respect to an unbonded flexible pipe segment **302**, a bonded flexible pipe segment **304**, or a pipe segment **102** that includes an inflexible or rigid configuration. Further, the method **1000** may be performed with respect to a smooth bore pipe segment, or a rough bore pipe segment.

[0179] Further aspects of the present disclosure are provided by the following clauses:

[0180] A replaceable seal housing for an end casing of an unbonded flexible pipe segment, the replaceable seal housing comprising: a seal housing-body comprising a sleeve portion and a flange portion; a plurality of seal housing-bolt holes extending longitudinally through the flange portion of

the seal housing-body; at least one of seal groove situated circumferentially about a radially outward surface of the sleeve portion of the seal housing-body; a fluid conduit defined by the seal housing-body and extending longitudinally through the sleeve portion and the flange portion; and a radial seal bore defined by the seal housing-body, wherein the radial seal bore extends from an axially distal surface of the seal housing-body.

[0181] The replaceable seal housing of any clause herein, comprising: an axial seal bore defined by an axially distal surface of the flange portion of the seal housing-body.

[0182] The replaceable seal housing of any clause herein, comprising: a plurality of blind holes extending longitudinally into the axially distal surface of the seal housing-body.

[0183] The replaceable seal housing of any clause herein, comprising one or more seal grooves situated about a radially outward surface of the sleeve portion of the seal housing-body.

[0184] The replaceable seal housing of any clause herein, wherein the seal housing-body has a material composition comprising at least one of: a thermoplastic material, a metal alloy, a ceramic, or a composite.

[0185] The replaceable seal housing of any clause herein, wherein the fluid conduit comprises a diameter of from 5 to 60 centimeters.

[0186] The replaceable seal housing of any clause herein, comprising one or more ring seals seated in the radial seal bore, the one or more ring seals comprising at least one of: a lap seal, a rib seal, an o-ring seal, a wiper seal, or an s-seal.

[0187] A seal housing for an end casing of a flexible pipe segment, the seal housing comprising: a seal housing-body defining a fluid conduit extending longitudinally therethrough; at least one seal bore defined by the seal housing-body, wherein the at least one seal bore extends from an axially distal surface of the seal housing-body.

[0188] The seal housing of any clause herein, wherein the at least one seal bore comprises at least one of: a radial seal bore defining a radially inward surface of the seal housing-body; or an axial seal bore situated about an axially distal surface of the seal housing-body.

[0189] The seal housing of any clause herein, wherein the seal housing-body comprising a sleeve portion and a flange portion, and wherein the fluid conduit extends through the sleeve portion and the flange portion.

[0190] The seal housing of any clause herein, comprising: a plurality of seal housing-bolt holes extending longitudinally through the flange portion of the seal housing-body, the plurality of seal housing-bolt holes comprising at least one of: a plurality of through holes, or a plurality of blind holes.

[0191] The seal housing of any clause herein, comprising: one or more helical threads defined by a radially outward surface of the seal housing-body.

[0192] The seal housing of any clause herein, comprising: at least one of seal groove situated circumferentially about a radially outward surface of the seal housing-body.

[0193] The seal housing of any clause herein, wherein the at least one seal groove comprises one or more seal grooves situated about at least one of: a proximal portion of the sleeve portion of the seal housing-body, or a distal portion of the sleeve portion of the seal housing.

[0194] The seal housing of any clause herein, comprising: a ring seal seated in a respective one of the at least one seal groove.

[0195] The seal housing of any clause herein, wherein the seal housing-body has a material composition comprising at least one of: a thermoplastic material, a metal alloy, a ceramic, or a composite.

[0196] The seal housing of any clause herein, wherein the fluid conduit comprises a diameter of from 5 to 60 centimeters.

[0197] The seal housing of any clause herein, comprising: a seal shroud seated in a respective one of the at least one seal bore.

[0198] The seal housing of any clause herein, comprising: one or more ring seals seated in a respective one of the at least one seal bore.

[0199] The seal housing of any clause herein wherein the one or more ring seals comprises at least one of: a lap seal, a rib seal, an o-ring seal, a wiper seal, or an s-seal.

[0200] An end fitting for a flexible pipe segment, the end fitting comprising: an end casing, the end casing defining a seal housing-receiving bore extending longitudinally through the end casing; and a seal housing positioned within the seal housing-receiving bore, wherein the seal housing defines at least one seal bore extending from an axially distal surface of the seal housing.

[0201] The end fitting of any clause herein, wherein the seal housing comprises a sleeve portion and a flange portion, the sleeve portion defining a proximal portion of the seal housing and the flange portion defining a distal portion of the seal housing; and wherein the seal housing-receiving bore of the end casing comprises a sleeve-receiving bore configured to receive the sleeve portion of the seal housing, and a flange-receiving bore configured to receive the flange portion of the seal housing.

[0202] The end fitting of any clause herein, wherein the seal housing fits within the seal housing-receiving bore with a circumferential clearance of from 10 to 100 micrometers, as determined with respect to at least one longitudinal position of the seal housing.

[0203] The end fitting of any clause herein, wherein the seal housing has a material composition comprising at least one of: a thermoplastic material, a metal alloy, a ceramic, or a composite.

[0204] A coupling assembly for a pipe segment, the coupling assembly comprising: an end casing, the end casing defining a seal housing-receiving bore extending longitudinally through the end casing; and a seal housing positionable within the seal housing-receiving bore and removably couplable to the end casing, wherein the seal housing defines at least one seal bore extending from an axially distal surface of the seal housing.

[0205] The coupling assembly of any clause herein, comprising: a gasket positionable within the seal housing-receiving bore proximally adjacent to the seal housing.

[0206] The coupling assembly of any clause herein, comprising: a cannula situated proximally adjacent to the seal housing.

[0207] The coupling assembly of any clause herein, wherein the seal housing comprises a first inward diameter and the cannula comprises a second inward diameter, and wherein the first inward diameter and the second inward diameter differ from one another by less than 1.0 millimeter.

[0208] The coupling assembly of any clause herein, comprising: a cannula ring positionable within the seal housing-receiving bore between the seal housing and the cannula.

[0209] The coupling assembly of any clause herein, wherein the cannula ring comprises: a cannula-receiving seat configured to receive a radially outward surface of the cannula; a cannula-receiving rim configured to receive an axially distal surface of the cannula; and a distal cannula ring-face configured to face the seal housing.

[0210] The coupling assembly of any clause herein, wherein the seal housing comprises a first inward diameter and the cannula ring comprises a third inward diameter, and wherein the first inward diameter and the third inward diameter differ from one another by less than 1.0 millimeter.

[0211] The coupling assembly of any clause herein, wherein the seal housing comprises a cannula extension defining a proximal portion of the seal housing.

[0212] The coupling assembly of any clause herein, comprising: a cannula circumferentially surrounding at least a portion of the cannula extension of the seal housing.

[0213] The coupling assembly of any clause herein, comprising: a cannula ring positionable within the seal housing-receiving bore between the seal housing and the cannula.

[0214] The coupling assembly of any clause herein, wherein the cannula ring comprises: a cannula-receiving seat configured to receive a radially outward surface of the cannula; a cannula-receiving rim configured to receive an axially distal surface of the cannula; and a distal cannula ring-face configured to face the seal housing.

[0215] The coupling assembly of any clause herein, wherein the seal housing comprises a sleeve portion and a flange portion, the sleeve portion defining a proximal portion of the seal housing and the flange portion defining a distal portion of the seal housing; and wherein the seal housing-receiving bore of the end casing comprises a sleeve-receiving bore configured to receive the sleeve portion of the seal housing, and a flange-receiving bore configured to receive the flange portion of the seal housing.

[0216] The coupling assembly of any clause herein, wherein at least a portion of the seal housing-receiving bore comprises a taper defining a decreasing diameter along a longitudinally proximal direction.

[0217] The coupling assembly of any clause herein, wherein the flange-receiving bore comprises a distal flange face, the distal flange face comprising a plurality of seal housing-bolt holes; and wherein the flange portion of the seal housing comprises a plurality of through holes corresponding to the plurality of seal housing-bolt holes of the distal flange face.

[0218] The coupling assembly of any clause herein, wherein the seal housing comprises a plurality of blind holes configured to receive a tool for installing and/or removing the seal housing from the seal housing-receiving bore of the end casing.

[0219] The coupling assembly of any clause herein, wherein: the end casing comprises a hub, the hub couplable to a counterpart fitting by a hub clamp interface; or the end casing comprises a flange, the flange comprising a plurality of flange-bolt holes, and the flange couplable to a counterpart fitting by a plurality of seal housing-bolts respectively extending through a corresponding one of the plurality of seal housing-bolt holes.

[0220] The coupling assembly of any clause herein, comprising: a seal shroud seatable in a respective one of the at least one seal bore.

[0221] The coupling assembly of any clause herein, comprising: one or more ring seals seatable in a respective one of the at least one seal bore, wherein the one or more ring seals comprises at least one of: a lap seal, a rib seal, an o-ring seal, a wiper seal, or an s-seal.

[0222] The coupling assembly of any clause herein, wherein the seal housing fits within the seal housing-receiving bore with a circumferential clearance of from 10 to 100 micrometers determined with respect to at least one longitudinal position of the seal housing.

[0223] The coupling assembly of any clause herein, wherein the seal housing-receiving bore comprises a first one or more helical threads, and wherein the seal housing comprises a second one or more helical threads, the first one or more helical threads configured to interface with the second one or more helical threads.

[0224] A coupling assembly for a flexible pipe segment, the coupling assembly comprising: an end casing, the end casing defining a seal housing-receiving bore extending longitudinally through the end casing; and a seal housing positionable within the seal housing-receiving bore and removably couplable to the end casing, wherein the seal housing defines at least one seal bore extending from an axially distal surface of the seal housing.

[0225] The coupling assembly of any clause herein, wherein the seal housing comprises a sleeve portion and a flange portion, the sleeve portion defining a proximal portion of the seal housing and the flange portion defining a distal portion of the seal housing; and wherein the seal housing-receiving bore of the end casing comprises a sleeve-receiving bore configured to receive the sleeve portion of the seal housing, and a flange-receiving bore configured to receive the flange portion of the seal housing.

[0226] The coupling assembly of any clause herein, wherein the seal housing fits within the seal housing-receiving bore with a circumferential clearance of from 10 to 100 micrometers, as determined with respect to at least one longitudinal position of the seal housing.

[0227] The coupling assembly of any clause herein, wherein the seal housing has a material composition comprising at least one of: a thermoplastic material, a metal alloy, a ceramic, or a composite.

[0228] The coupling assembly of any clause herein, comprising the seal housing of any clause herein.

[0229] A pipe assembly for flowing a fluid, the pipe assembly comprising: a flexible pipe segment, the flexible pipe segment having an unbonded configuration or a bonded configuration; and at least one end fitting, wherein a respective one of the at least one end fitting comprises: an end casing coupled to the flexible pipe segment, the end casing defining a seal housing-receiving bore extending longitudinally through the end casing, a seal housing positioned within the seal housing-receiving bore and removably coupled to the end casing, wherein the seal housing defines at least one seal bore extending from an axially distal surface of the seal housing, and one or more sealing elements seated in a respective one of the at least one seal bore; wherein a respective one of the at least one end fitting is couplable to a counterpart fitting, wherein the seal housing and/or the one or more sealing elements are configured to define a sealing interface with the counterpart fitting.

[0230] The pipe assembly of any clause herein, wherein the one or more sealing elements comprises: at least one ring seal, the at least one ring seal comprising a proximal seal surface in contact with the seal housing and a distal seal surface in contact with the counterpart fitting.

[0231] The pipe assembly of any clause herein, wherein the one or more sealing elements comprises: a seal shroud comprising a proximal portion and a distal portion, the proximal portion seated in the respective one of the at least one seal bore, and the distal portion in contact with the counterpart fitting.

[0232] The pipe assembly of any clause herein, wherein the one or more sealing elements comprises: a first radial seal element and a second axial seal element, the first radial seal element seated in the respective one of the at least one seal bore proximally adjacent to the seal shroud, and the second axial seal element circumferentially surrounding the seal shroud.

[0233] The pipe assembly of any clause herein, wherein the first radial seal element comprises at least one of: an o-ring seal, a wiper seal, or an s-seal.

[0234] The pipe assembly of any clause herein, wherein the second axial seal element comprises at least one of: a lap seal or a rib seal, and/or wherein the second axial seal element comprises at least one of: a lap seal or a rib seal.

[0235] The pipe assembly of any clause herein, comprising: a gasket positioned within the seal housing-receiving bore proximally adjacent to the seal housing.

[0236] The pipe assembly of any clause herein, comprising: a cannula situated proximally adjacent to the seal housing.

[0237] The pipe assembly of any clause herein, wherein the seal housing comprises a first inward diameter and the cannula comprises a second inward diameter, and wherein the first inward diameter and the second inward diameter differ from one another by less than 1.0 millimeter.

[0238] The pipe assembly of any clause herein, comprising: a cannula ring positioned within the seal housing-receiving bore between the seal housing and the cannula.

[0239] The pipe assembly of any clause herein, wherein the seal housing comprises a cannula extension defining a proximal portion of the seal housing.

[0240] The pipe assembly of any clause herein, comprising: a cannula circumferentially surrounding at least a portion of the cannula extension of the seal housing.

[0241] A pipe assembly, comprising: a flexible pipe segment; and an end fitting, the end fitting comprising: an end casing permanently coupled to the flexible pipe segment, the end casing defining a seal housing-receiving bore extending longitudinally through the end casing; a replaceable seal housing positioned within the seal housing-receiving bore, the replaceable seal housing defining a radial seal bore extending from an axially distal surface of the replaceable seal housing; and one or more sealing elements seated in the radial seal bore; wherein the replaceable seal housing comprises a sleeve portion and a flange portion, and wherein the replaceable seal housing is replaceably coupled to the end casing at least in part by a plurality of seal housing-bolts respectively installed in a corresponding one of a plurality of seal housing-bolt holes extending longitudinally through the flange portion of the replaceable seal housing; and wherein the end fitting is couplable to a counterpart fitting with at least one of the one or more sealing elements providing a sealing interface with the counterpart fitting.

[0242] The pipe assembly of any clause herein, wherein the pipe assembly and/or the counterpart fitting defines a part of a petroleum extraction station or a fluid transfer station.

[0243] The pipe assembly of any clause herein, wherein the flexible pipe segment comprises an inward diameter of from 5 to 60 centimeters.

[0244] The pipe assembly of any clause herein, wherein the flexible pipe segment comprises a length of from 1 to 1,000 meters.

[0245] A pipe assembly for flowing a fluid, the pipe assembly comprising: a pipe segment; and at least one coupling assembly respectively coupled to an end of the pipe segment, wherein the coupling assembly comprises: an end casing permanently coupled to the end of the pipe segment, the end casing defining a seal housing-receiving bore extending longitudinally through the end casing; and a seal housing positioned within the seal housing-receiving bore and removably coupled to the end casing, wherein the seal housing defines at least one seal bore extending from an axially distal surface of the seal housing.

[0246] The pipe assembly of any clause herein, wherein the pipe segment comprises one of: an unbonded flexible pipe segment; a bonded flexible pipe segment; or a rigid pipe segment.

[0247] The pipe assembly of any clause herein, wherein the pipe segment comprises one of: a smooth bore pipe segment; or a rough bore pipe segment.

[0248] The pipe assembly of any clause herein, comprising: a hub defined by the end casing; a hub clamp interface couplable to the hub; and a seal assembly comprising: at least one of a ring seal and a shroud respectively seatable in a respective one of the at least one seal bore.

[0249] The pipe assembly of any clause herein, comprising: a fitting adapter comprising an adapter hub and an adapter flange, the adapter hub couplable to the hub by the hub clamp interface.

[0250] The pipe assembly of any clause herein, wherein the pipe assembly defines at least a portion of a pup joint.

[0251] The pipe assembly of any clause herein, wherein the pipe assembly defines at least a portion of an underwater pipeline.

[0252] The pipe assembly of any clause herein, comprising the coupling assembly of any clause herein and/or the seal housing of any clause herein.

[0253] A method of installing a seal housing in an end casing of a pipe assembly, the method comprising: forming a seal housing-receiving bore in an end casing of a coupling assembly for a pipe segment, the seal housing-receiving bore extending longitudinally through the end casing; and installing a seal housing in the seal housing-receiving bore, wherein the seal housing defines at least one seal bore extending from an axially distal surface of the seal housing.

[0254] The method of any clause herein, wherein installing the seal housing in the seal housing receiving-bore comprises removably coupling the seal housing to the end casing.

[0255] The method of any clause herein, wherein forming the seal housing-receiving bore comprises increasing an inward diameter of at least a distal portion of a fluid conduit defined by the end casing, the fluid conduit extending longitudinally through the end casing.

[0256] The method of any clause herein, wherein forming the seal housing-receiving bore comprises forming a sleeve-receiving bore and a flange-receiving bore, the seal housing-receiving bore configured to receive a sleeve portion of the seal housing, and the flange-receiving bore configured to receive a flange portion of the seal housing.

[0257] The method of any clause herein, comprising: forming a plurality of seal housing-bolt holes in a distal flange face of the flange-receiving bore, and coupling the seal housing to the end casing with a plurality of seal housing-bolts respectively installed in a corresponding one of the plurality of seal housing-bolt holes.

[0258] The method of any clause herein, comprising: forming a first one or more helical threads in the flange-receiving bore, and coupling the seal housing to the end casing with a second one or more helical threads defined by the seal housing, the first one or more helical threads configured to interface with the second one or more helical threads.

[0259] The method of any clause herein, comprising: removing a cannula ring from the coupling assembly prior to installing the seal housing, wherein a proximal portion of the seal housing, when installed in the seal housing-receiving bore, occupies a space previously occupied by the cannula ring.

[0260] The method of any clause herein, comprising: removing a cannula from the coupling assembly prior to installing the seal housing.

[0261] The method of any clause herein, wherein a proximal portion of the seal housing, when installed in the seal housing-receiving bore, occupies at least a portion of a space previously occupied by the cannula.

[0262] The method of any clause herein, comprising: replacing the cannula with a replacement cannula, the replacement cannula having a larger inward diameter than the cannula having been removed from the coupling assembly.

[0263] The method of any clause herein, wherein the seal housing comprises a cannula extension, the cannula extension occupying at least a portion of a space previously occupied by the cannula having been removed from the coupling assembly.

[0264] The method of any clause herein, comprising: replacing the cannula ring with a replacement cannula ring, the replacement cannula ring having a larger inward diameter than the cannula ring having been removed from the coupling assembly.

[0265] The method of any clause herein, wherein the seal housing comprises a cannula extension, the cannula extension occupying at least a portion of a space previously occupied by the cannula ring having been removed from the coupling assembly.

[0266] The method of any clause herein, comprising: positioning a gasket within the seal housing-receiving bore prior to installing a seal housing in the seal housing-receiving bore, the gasket situated proximally adjacent to the seal housing.

[0267] The method of any clause herein, wherein the coupling assembly comprises a cannula, and wherein the seal housing comprises a first inward diameter and the cannula comprises a second inward diameter, and wherein the first inward diameter and the second inward diameter differ from one another by less than 1.0 millimeter.

[0268] The method of any clause herein, wherein the seal housing comprises a first inward diameter and the pipe comprises a third inward diameter, and wherein the first inward diameter and the third inward diameter differ from one another by less than 1.0 millimeter.

[0269] The method of any clause herein, wherein the seal housing-receiving bore comprises a taper defining a decreasing diameter along a longitudinally proximal direction.

[0270] The method of any clause herein, wherein the seal housing fits within the seal housing-receiving bore with a circumferential clearance of from 10 to 100 micrometers determined with respect to at least one longitudinal position of the seal housing.

[0271] The method of any clause herein, comprising: removing the seal housing after a period of service; and replacing the seal housing with a replacement seal housing.

[0272] The method of any clause herein, wherein the pipe comprises one of: an unbonded flexible pipe segment; a bonded flexible pipe segment; or a rigid pipe segment.

[0273] The method of any clause herein, wherein the pipe comprises one of: a smooth bore pipe segment; or a rough bore pipe segment.

[0274] A method of coupling a pipe assembly to a fluid flowing system, the method comprising: positioning a coupling assembly adjacent to a counterpart fitting of the fluid flowing system, the coupling assembly comprising an end casing permanently coupled to a pipe segment and a seal housing removably coupled to the end casing; and coupling the end casing of the coupling assembly to the counterpart fitting, wherein the seal housing comprises at least one sealing interface that interacts with the counterpart fitting to fluidically seal a fluid flow path through the coupling assembly.

[0275] The method of any clause herein, wherein the coupling assembly comprises: a seal housing-receiving bore defined by the end casing, the seal housing-receiving bore extending longitudinally through the end casing; a seal housing positioned within the seal housing-receiving bore and removably coupled to the end casing, wherein the seal housing defines at least one seal bore extending from an axially distal surface of the seal housing; and one or more ring seals seated in a respective one of the at least one seal bore, wherein the one or more ring seals provide a sealing interface between the seal housing and the counterpart fitting.

[0276] The method of any clause herein, wherein the one or more ring seals comprises a first radial seal element, the first radial seal element comprising a proximal seal surface in contact with the seal housing and a distal seal surface in contact with the counterpart fitting.

[0277] The method of any clause herein, wherein the first radial seal element comprises one of: a lap seal or a rib seal.

[0278] The method of any clause herein, wherein the coupling assembly comprises: a seal shroud comprising a proximal portion and a distal portion, the proximal portion seated in a respective one of the at least one seal bore, and the distal portion in contact with the counterpart fitting.

[0279] The method of any clause herein, wherein the one or more ring seals comprises: a first radial seal element and a second axial seal element, the first radial seal element proximally adjacent to the seal shroud, and the second axial seal element circumferentially surrounding the seal shroud.

[0280] The method of any clause herein, wherein the first radial seal element comprises at least one of: an o-ring seal, a wiper seal, or an s-seal.

[0281] The method of any clause herein, wherein the second axial seal element comprises at least one of: a lap seal or a rib seal.

[0282] The method of any clause herein, wherein the end casing comprises a first hub and the counterpart fitting comprises a second hub, and wherein coupling the end casing of the coupling assembly to the counterpart fitting comprises clamping the first hub and the second hub with a hub clamp interface; or wherein the end casing comprises a first flange and the counterpart fitting comprises a second flange, and wherein coupling the end casing of the coupling assembly to the counterpart fitting comprises bolting the first flange and the second flange to one another with a plurality of flange-bolts.

[0283] The method of any clause herein, wherein the one or more ring seals comprises a first radial seal element, the first radial seal element comprising a proximal seal surface seated in a respective one of the at least one seal bore and a distal seal surface in contact with the counterpart fitting.

[0284] The method of any clause herein, wherein the coupling assembly comprises: a seal shroud comprising a proximal portion and a distal portion, the proximal portion seated in a respective one of the at least one seal bore, and the distal portion in contact with the counterpart fitting.

[0285] The method of any clause herein, wherein the pipe comprises one of: an unbonded flexible pipe segment; a bonded flexible pipe segment; or a rigid pipe segment.

[0286] The method of any clause herein, wherein the pipe comprises one of: a smooth bore pipe segment; or a rough bore pipe segment.

[0287] The method of any clause herein, wherein the counterpart fitting defines at least a portion of a pup joint.

[0288] The method of any clause herein, wherein the counterpart fitting defines at least a portion of a petroleum extraction station.

[0289] The method of any clause herein, wherein the counterpart fitting defines at least a portion of a well fracking station.

[0290] The method of any clause herein, wherein the counterpart fitting defines at least a portion of a fluid transfer station.

[0291] The method of any clause herein, wherein the pipe comprises a length of from 1 to 1,000 meters.

[0292] The method of any clause herein, wherein the pipe comprises an inward diameter of from 5 to 60 centimeters.

[0293] The method of any clause herein, wherein the counterpart fitting comprises: an interface fitting, the interface fitting defining an interface bore extending longitudinally through the interface fitting; an interface-seal housing positioned within the interface bore, wherein the interface-seal housing defines at least one interface-seal bore extending from an axially distal surface of the interface-seal housing; and wherein a distal portion of the one or more ring seals are seated in a respective one of the at least one interface-seal bore, wherein the sealing interface between the seal housing and the counterpart fitting comprises: a proximal sealing interface defined by a proximal portion of the one or more ring seals and the respective one of the at least one seal bore; and a distal sealing interface defined by the distal portion of the one or more ring seals and the respective one of the at least one interface-seal bore.

[0294] The method of any clause herein, comprising: removing the seal housing after a period of service; and replacing the seal housing with a replacement seal housing.

[0295] The method of any clause herein, performed with respect to the pipe assembly of any clause herein, the coupling assembly of any clause herein, and/or the seal housing of any clause herein.

[0296] Although the presently disclosed subject matter has been described with reference to the embodiments illustrated in the attached drawing figures, it is noted that equivalents may be utilized, and substitutions made herein without departing from the scope of the invention defined by the appended claims.

[0297] Accordingly, what is claimed as new and desired to be protected by Letters Patent includes the following:

1. A pipe end fitting assembly for coupling pipe segments, the pipe end fitting assembly comprising:

an end casing configured to be coupled to a pipe segment, the end casing defining a seal housing-receiving bore extending longitudinally through the end casing;

a seal housing positioned within the seal housing-receiving bore and removably coupled to the end casing,

wherein the seal housing comprises an axially proximal surface configured to be proximal to the pipe segment when the end casing is coupled to the pipe segment; and

a sealing element at least partially covering the axially proximal surface between the axially proximal surface and the pipe segment.

2. The pipe end fitting assembly of claim **1**,

wherein the sealing element comprises a primary seal and a proximal seal, and

wherein the proximal seal is positioned adjacent to the primary seal and between the end casing and the seal housing.

3. The pipe end fitting assembly of claim **1**, wherein the sealing element comprises at least one of an o-ring seal, a wiper seal, or an s-seal.

4. The pipe end fitting assembly of claim **1**, wherein the sealing element extends at least a portion of a transverse width of the seal housing.

5. The pipe end fitting assembly of claim **1**, wherein the sealing element extends a full transverse width of the seal housing.

6. The pipe end fitting assembly of claim **4**, wherein the seal housing further comprises a cannula extension extending from the seal housing further defining a fluid conduit and configured to receive at least a portion of the pipe segment opposite of the fluid conduit.

7. The pipe end fitting assembly of claim **1**,

wherein the seal housing further comprises a seal receiving seat positioned at a distal end of the seal housing; and

further comprising a seal assembly disposed in the seal receiving seat.

8. The pipe end fitting assembly of claim **7**, wherein the seal housing further comprises one or more seal bores extending laterally from the seal housing and configured to receive one or more seal assembly portions of the seal assembly.

9. A pipe end fitting assembly for coupling pipe segments, the pipe end fitting assembly comprising:

an end casing configured to be coupled to a pipe segment, the end casing defining a seal housing-receiving bore extending longitudinally through the end casing;

a seal housing positioned within the seal housing-receiving bore and removably coupled to the end casing;

wherein the seal housing comprises a flange portion at a distal end of the seal housing;

a seal housing coupling configured to selectively couple the seal housing to the end casing in the flange portion at the distal end of the seal housing; and

a sealing element positioned between an axially proximal surface of the seal housing and the pipe segment.

10. The pipe end fitting assembly of claim **9**, wherein the seal housing further comprises:

a seal receiving seat positioned at the distal end of the seal housing;

a seal assembly disposed in the seal receiving seat; and

one or more seal bores extending laterally from the seal housing and configured to receive one or more seal assembly portions of the seal assembly.

11. The pipe end fitting assembly of claim **9**,

wherein the sealing element comprises a primary seal and a proximal seal, and

wherein the proximal seal is positioned adjacent to the primary seal and between the end casing and the seal housing.

12. The pipe end fitting assembly of claim **9**, wherein the sealing element comprises at least one of an o-ring seal, a wiper seal, or an s-seal.

13. The pipe end fitting assembly of claim **9**, wherein the sealing element extends at least a portion of a transverse width of the seal housing.

14. The pipe end fitting assembly of claim **9**,

wherein the sealing element extends a full transverse width of the seal housing, and

wherein the seal housing further comprises a cannula extension extending from the seal housing further defining a fluid conduit and configured to receive at least a portion of the pipe segment opposite of the fluid conduit.

15. A pipe end fitting assembly for coupling pipe segments, the pipe end fitting assembly comprising:

an end casing configured to be coupled to a pipe segment, the end casing defining a seal housing-receiving bore extending longitudinally through the end casing,

a seal housing positioned within the seal housing-receiving bore and removably coupled to the end casing;

wherein the seal housing comprises a flange portion at a distal end of the seal housing;

a seal housing coupling configured to selectively couple the seal housing to the end casing at the distal end of the seal housing;

wherein the seal housing comprises an axially proximal surface configured to be proximal to the pipe segment when the end casing is coupled to the pipe segment;

a sealing element positioned at the axially proximal surface and at least partially covering the axially proximal surface between the axially proximal surface and the pipe segment;

a radial seal bore positioned at the distal end of the seal housing; and

one or more radial seal elements positioned in the radial seal bore and configured to create a seal between the seal housing and a counterpart fitting.

16. The pipe end fitting assembly of claim **15**, wherein the one or more radial seal elements comprises a ring seal and a seal shroud.

17. The pipe end fitting assembly of claim **15**, wherein the sealing element extends at least a portion of a transverse width of the seal housing.

18. The pipe end fitting assembly of claim **15**, wherein the sealing element extends a full transverse width of the seal housing.

19. The pipe end fitting assembly of claim **18**, wherein the seal housing further comprises a cannula extension extending from the seal housing further defining a fluid conduit and configured to receive at least a portion of the pipe segment opposite of the fluid conduit.

20. The pipe end fitting assembly of claim **15**, further comprising a fluid conduit comprising a fluid conduit diameter and defined by a radially inward surface of the seal housing, wherein the fluid conduit diameter is equal to an inner diameter of the pipe segment.

* * * * *