US 20250284312A1

(19) United States
(12) Patent Application Publication
NAM et al.

(10) Pub. No.: US 2025/0284312 A1
(43) Pub. Date: Sep. 11, 2025

(54) **ELECTRONIC DEVICE**

(71) Applicant: **Samsung Display Co., Ltd.**, Yongin-si (KR)

(72) Inventors: **HYEYOUNG NAM**, Cheonan-si (KR); **BOYUN KIM**, Cheonan-si (KR); **NAMHEE PARK**, Hwaseong-si (KR)

(21) Appl. No.: **19/220,717**

(22) Filed: **May 28, 2025**

Related U.S. Application Data

(63) Continuation of application No. 18/668,524, filed on May 20, 2024, now Pat. No. 12,346,152, which is a continuation of application No. 18/093,279, filed on Jan. 4, 2023, now Pat. No. 12,045,085, which is a continuation of application No. 17/142,048, filed on Jan. 5, 2021, now Pat. No. 11,556,146.

(30) **Foreign Application Priority Data**

Feb. 19, 2020 (KR) 10-2020-0020250

Publication Classification

(51) **Int. Cl.**

G06F 1/16	(2006.01)
G02B 1/14	(2015.01)
G09F 9/30	(2006.01)

(52) **U.S. Cl.**

CPC ***G06F 1/1605*** (2013.01); ***G02B 1/14*** (2015.01); ***G06F 1/1652*** (2013.01); ***G09F 9/301*** (2013.01)

(57) **ABSTRACT**

An electronic device includes: a display panel having an active region and a peripheral region adjacent to the active region; an electronic module disposed below the display panel; a first light-blocking element disposed on the display panel and overlapping the peripheral region; and a second light-blocking element disposed on the electronic module with the display panel interposed therebetween. A hole is at least partially surrounded by the active region is defined in a portion of the display panel. The second light blocking element is disposed in an area adjacent to the hole, when viewed in a plan view. The first light-blocking element has a first thickness and the second light-blocking element has a second thickness less than the first thickness.

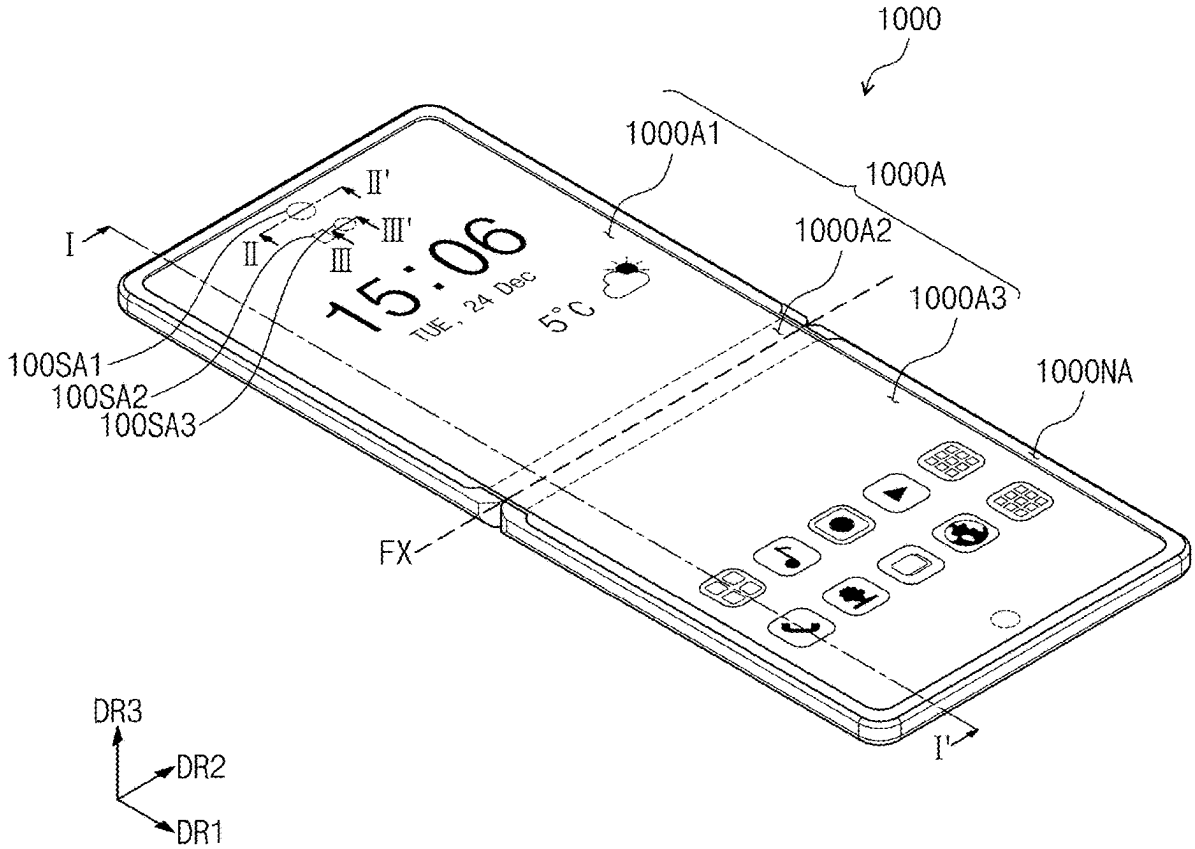

FIG. 1A

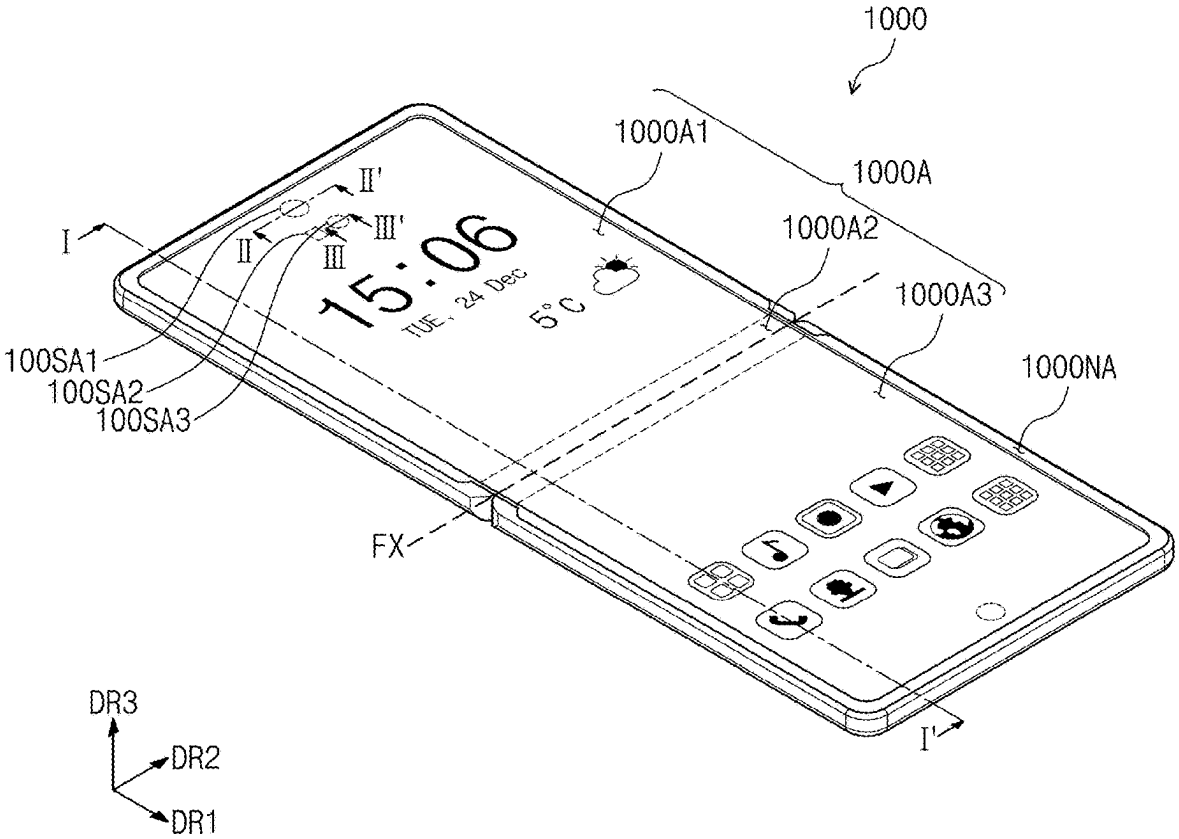
1000
1000A1
1000A
1000A2
1000A3
1000NA
I
I'
II
II'
III
III'
100SA1
100SA2
100SA3
FX
15:06
TUE, 24 Dec
5°C
DR3
DR2
DR1

FIG. 1B

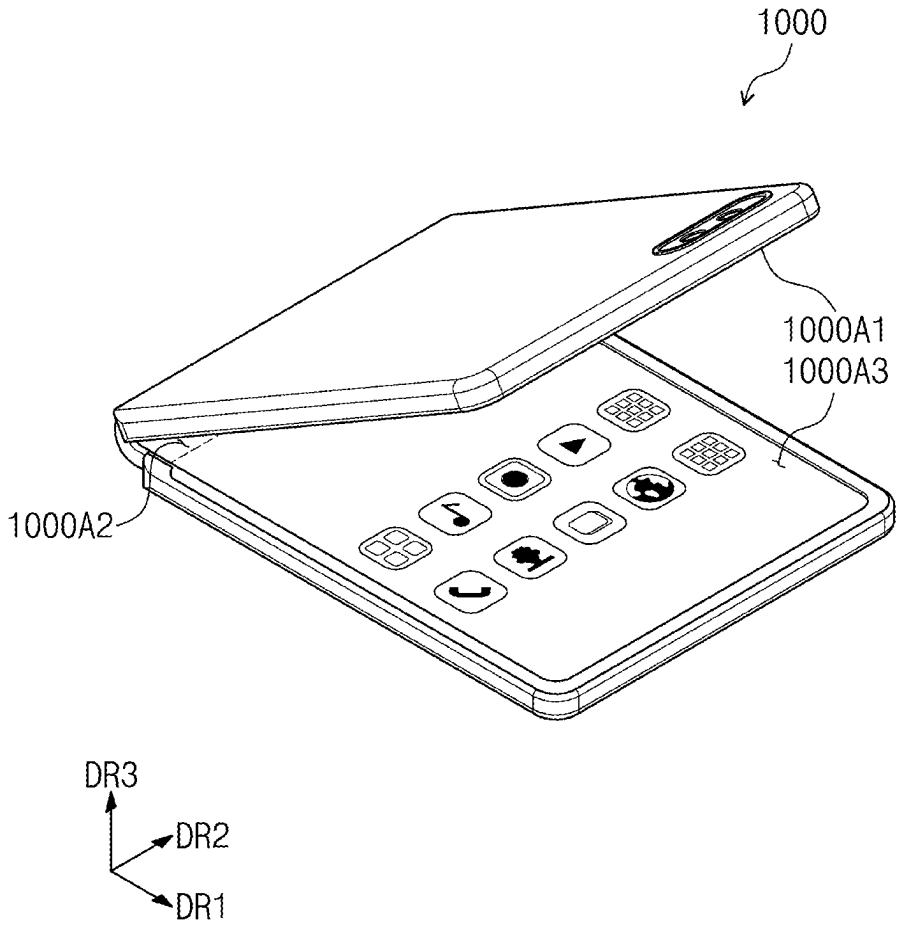

FIG. 2

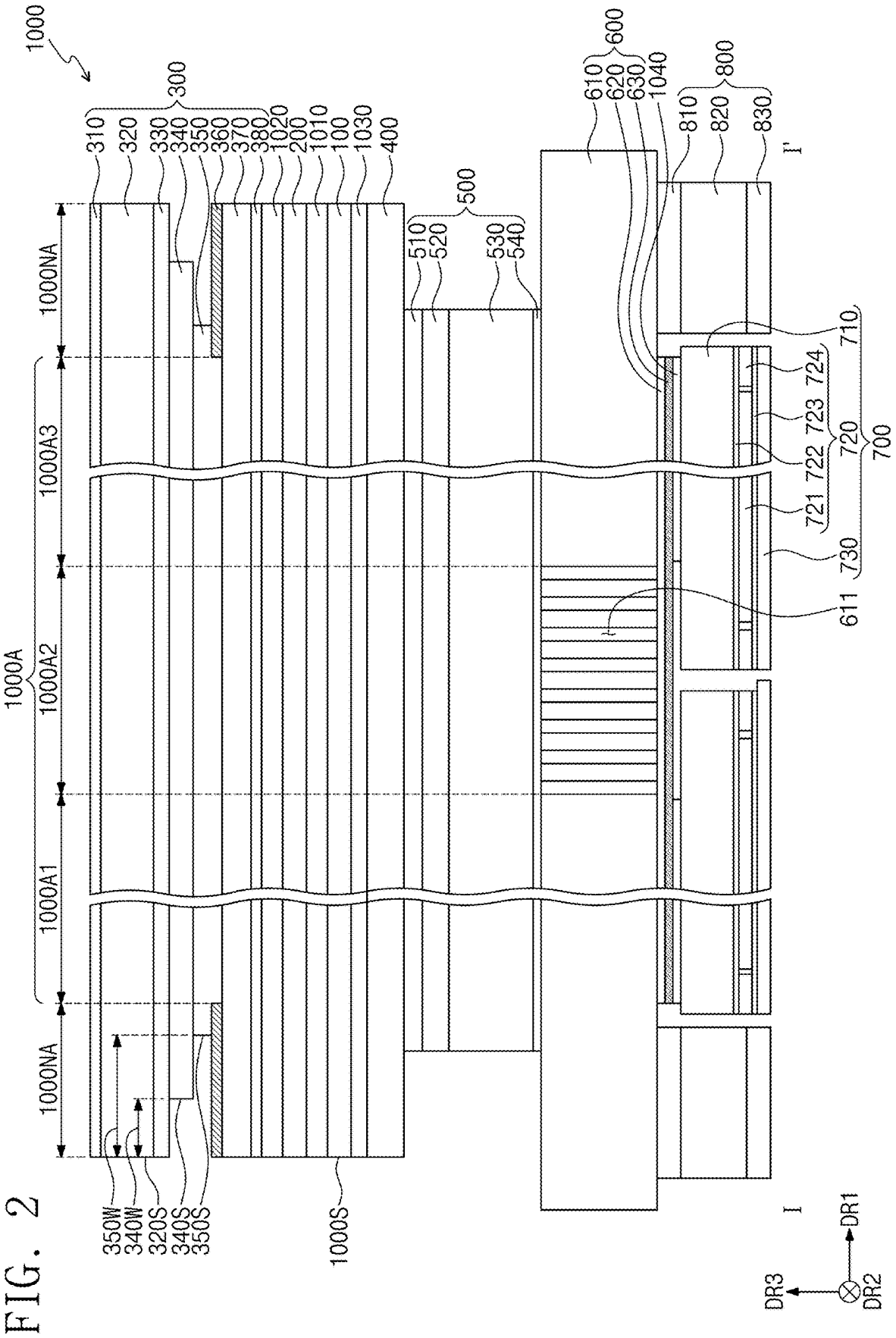
1000
300
310
320
330
340
350
360
370
380
1020
200
1010
100
1030
400
500
510
520
530
540
600
610
620
630
1040
800
810
820
830
I'
710
724
723
722
721
720
700
730
611
1000NA
1000A3
1000A2
1000A1
1000A
350W
340W
320S
340S
350S
1000S
I
DR1
DR2
DR3

FIG. 3A

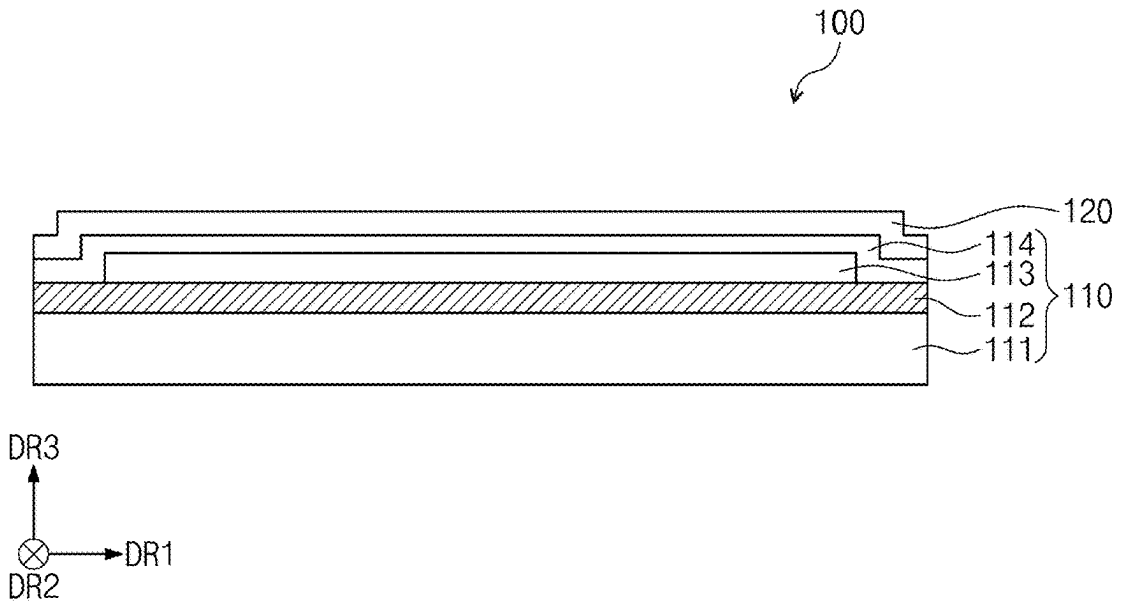
100
120
114
113
110
112
111
DR3
DR1
DR2

FIG. 3B

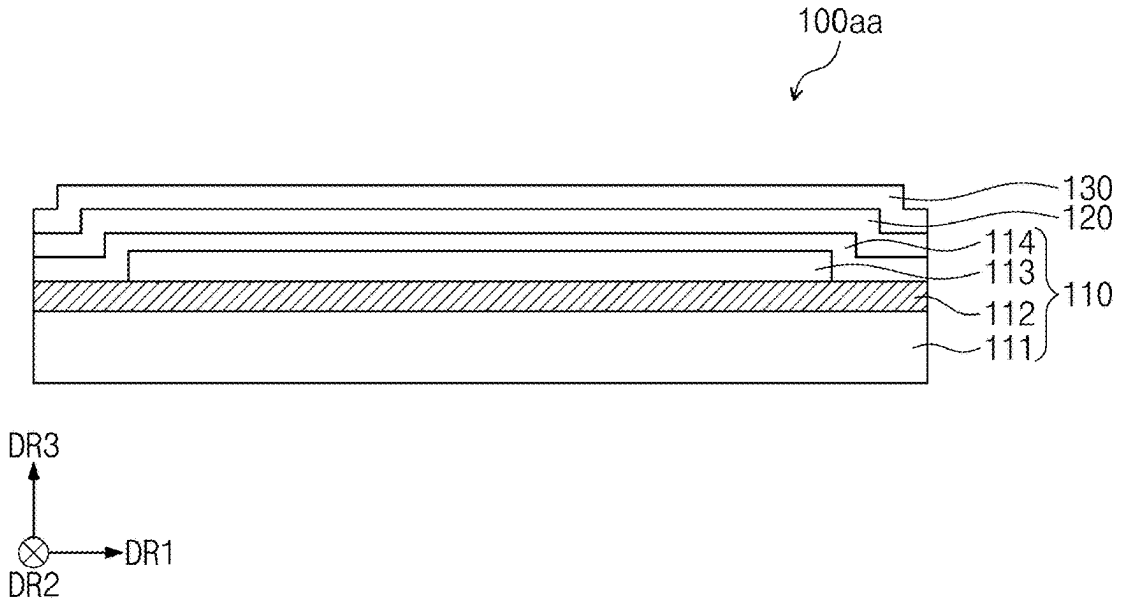
100aa
130
120
114
113
110
112
111
DR3
DR1
DR2

FIG. 4A

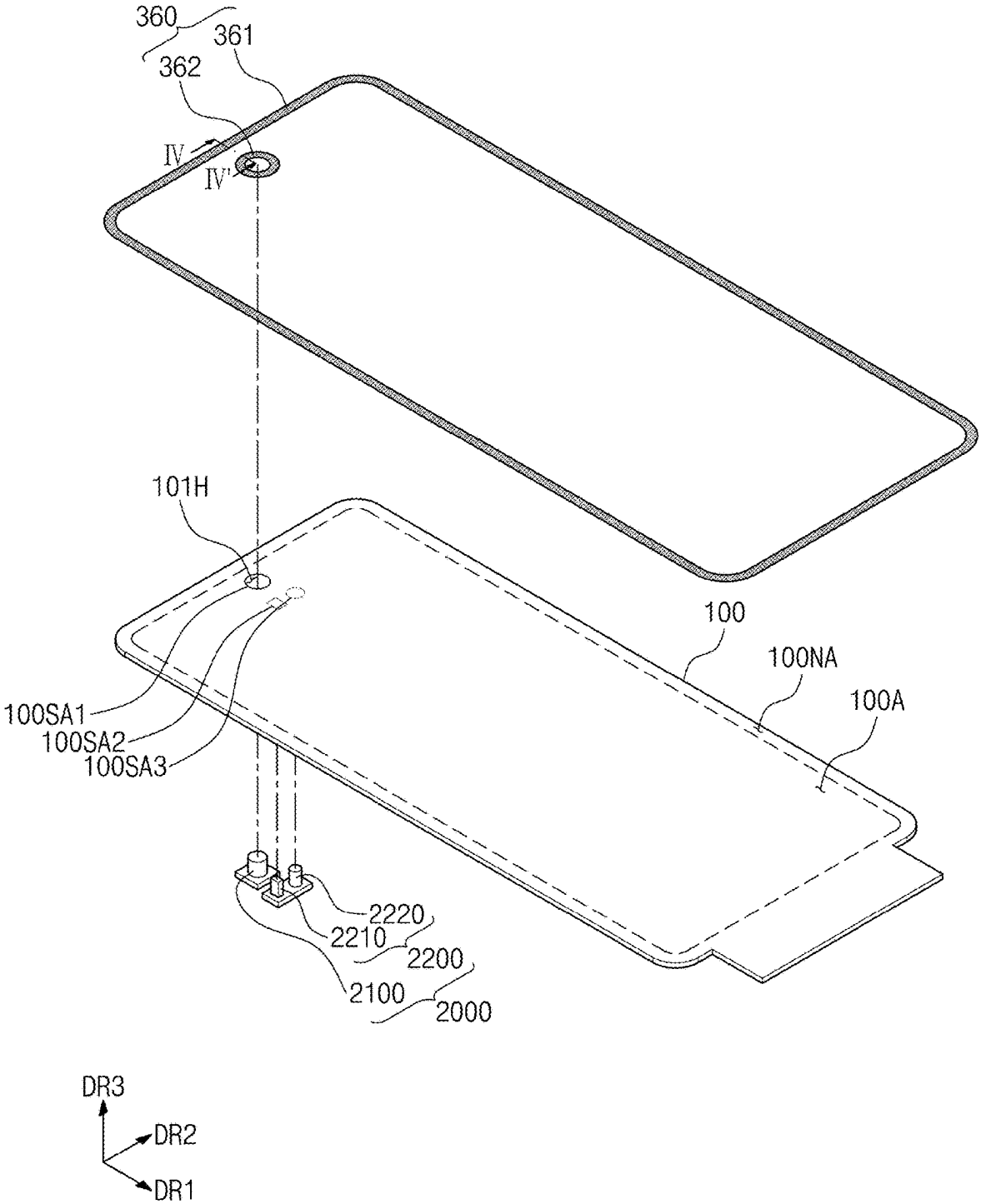
360
361
362
IV
IV'
101H
100
100NA
100A
100SA1
100SA2
100SA3
2220
2210
2200
2100
2000
DR3
DR2
DR1

FIG. 4B

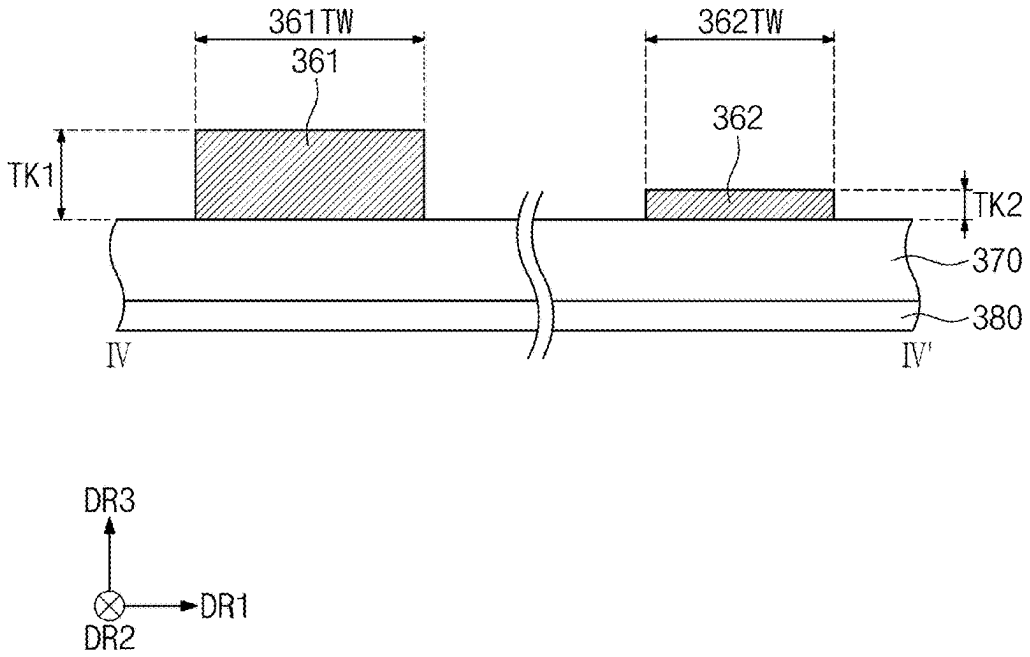
361TW
361
362TW
362
TK1
TK2
370
380
IV
IV'
DR3
DR1
DR2

FIG. 4C

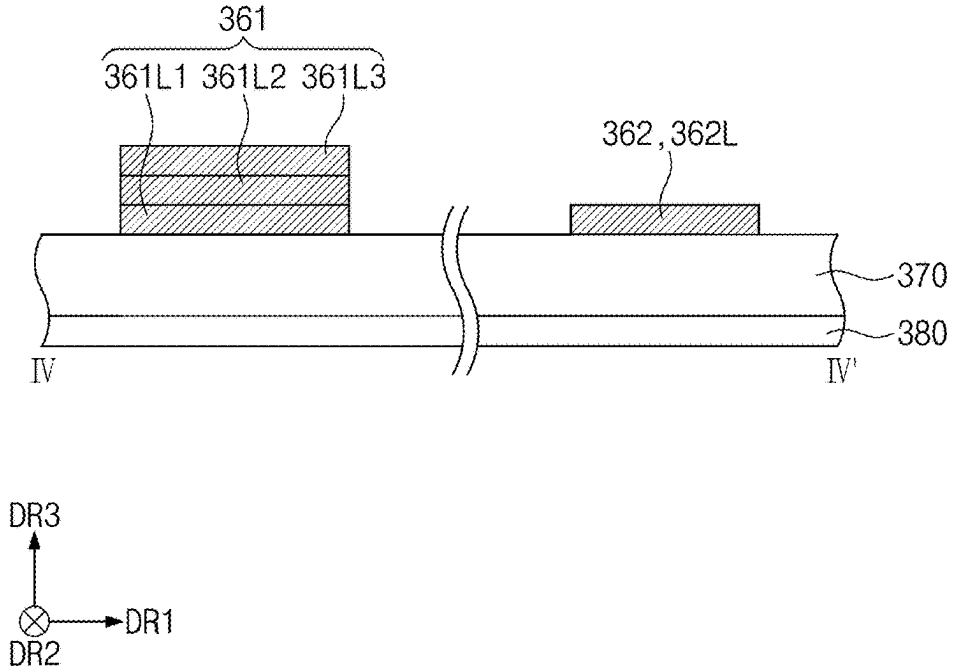
361
361L1 361L2 361L3
362, 362L
370
380
IV
IV'
DR3
DR1
DR2

FIG. 5

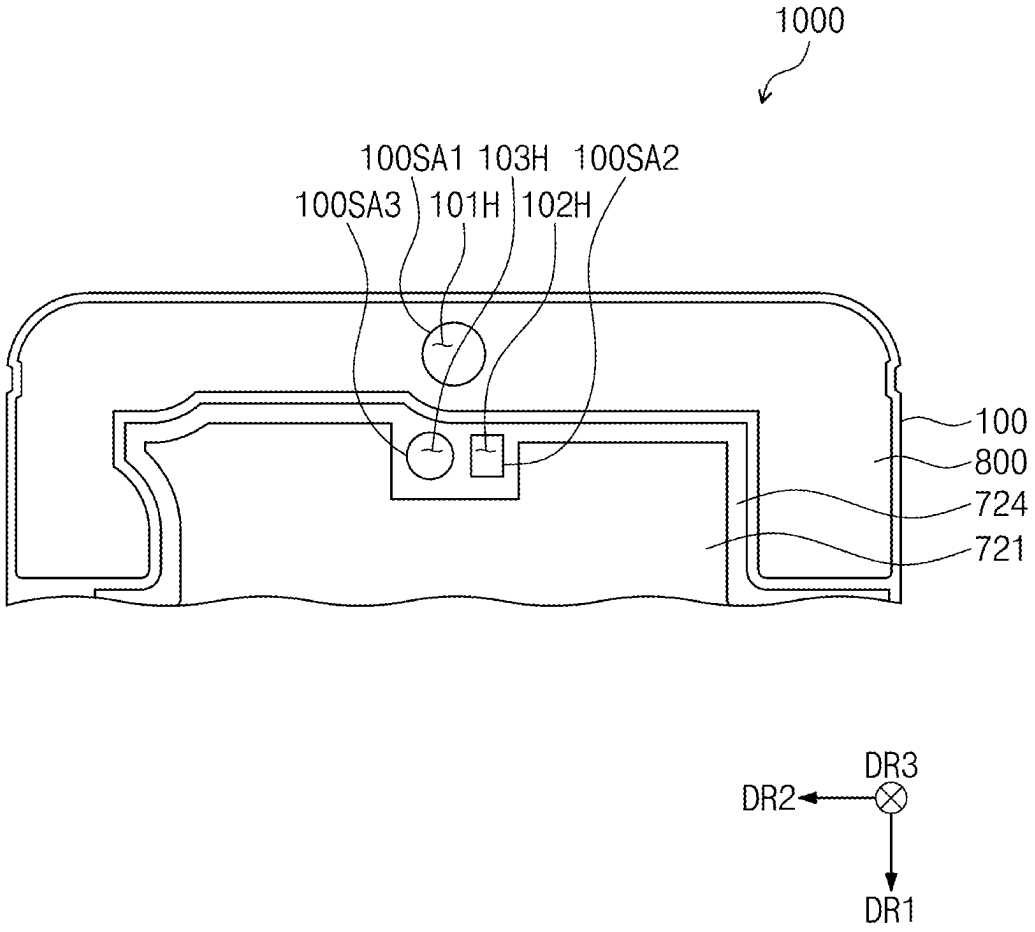
1000
100SA1
103H
100SA2
100SA3
101H
102H
100
800
724
721
DR3
DR2
DR1

FIG. 6

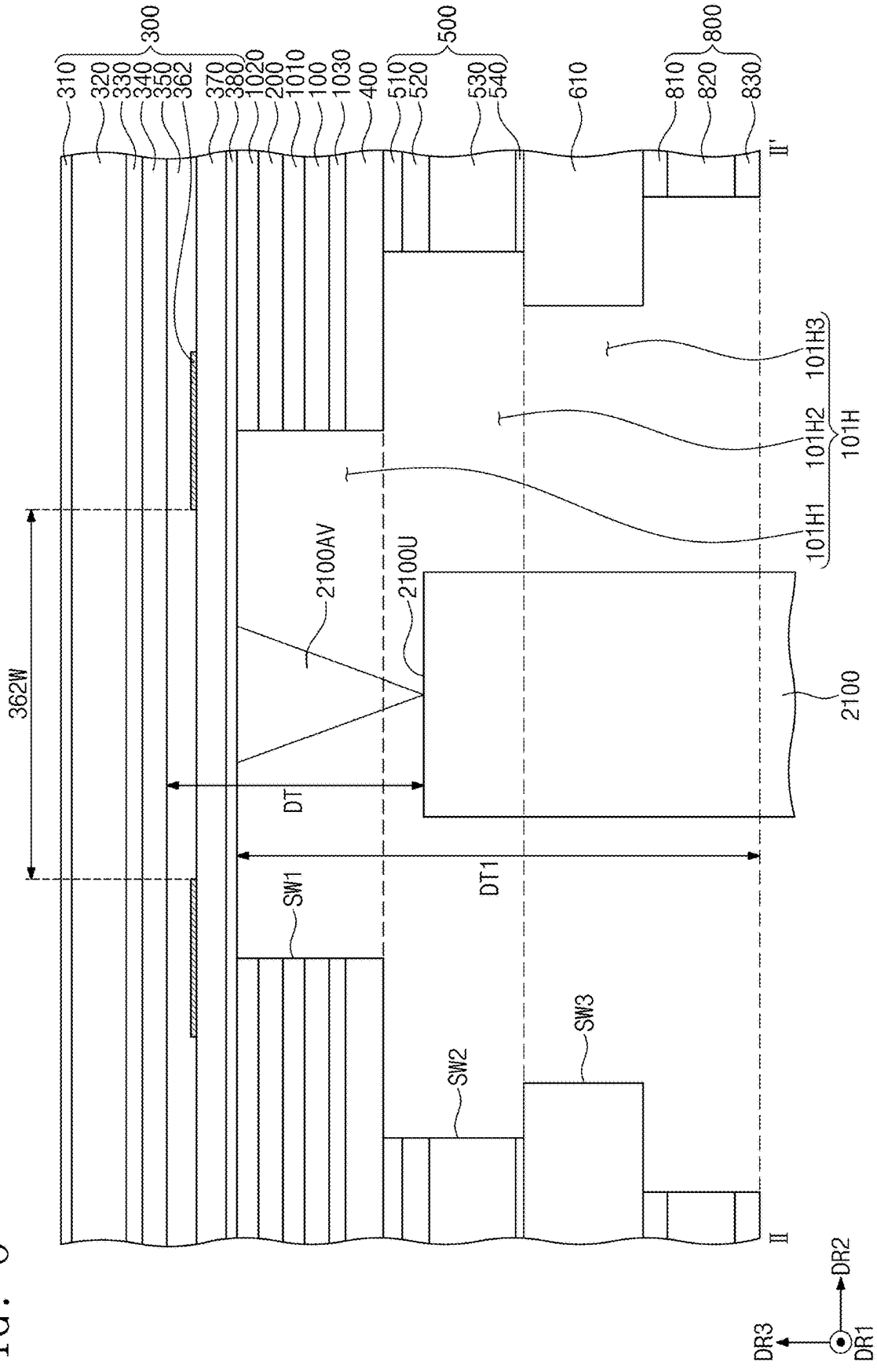
300
310
320
330
340
350
362
370
380
1020
200
1010
100
1030
400
500
510
520
530
540
610
800
810
820
830
II'
101H3
101H2
101H
101H1
2100AV
2100U
2100
362W
DT
DT1
SW1
SW2
SW3
II
DR3
DR2
DR1

FIG. 7

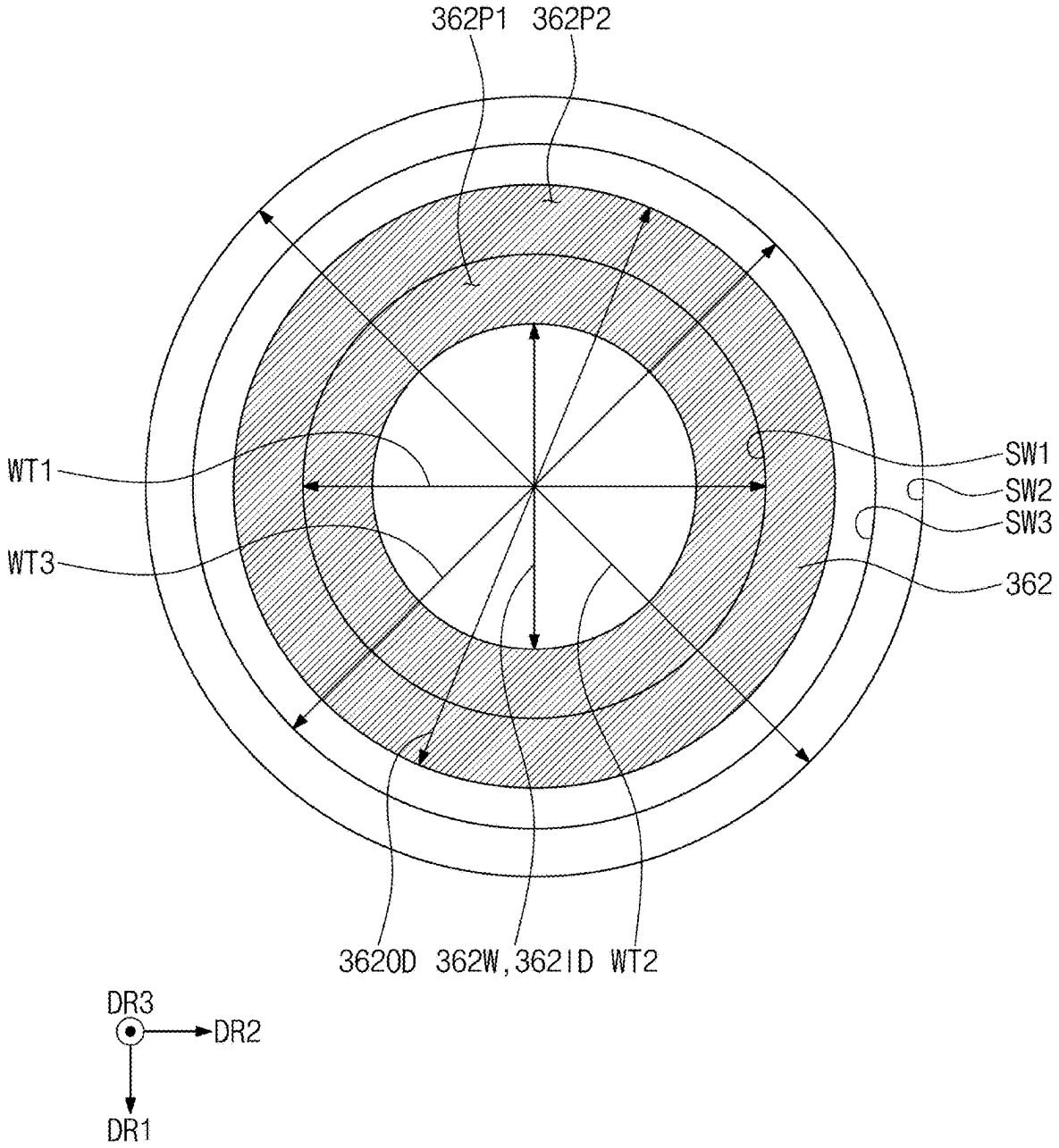
362P1
362P2
WT1
WT3
SW1
SW2
SW3
362
3620D
362W,3621D
WT2
DR3
DR2
DR1

FIG. 8

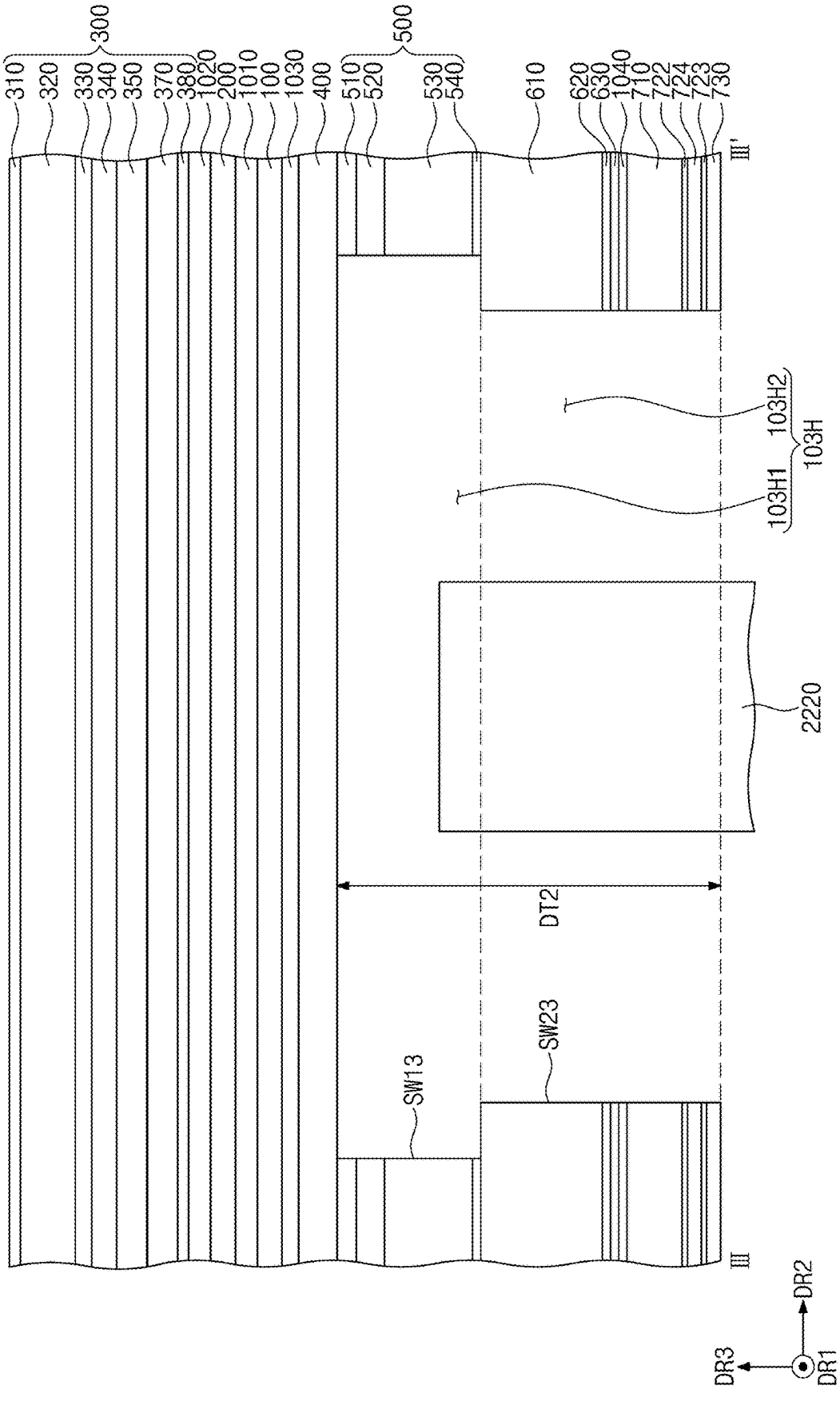
300
500
310
320
330
340
350
370
380
1020
200
1010
100
1030
400
510
520
530
540
610
620
630
1040
710
722
724
723
730
III'
103H2
103H
103H1
2220
DT2
SW23
SW13
III
DR2
DR3
DR1

FIG. 9

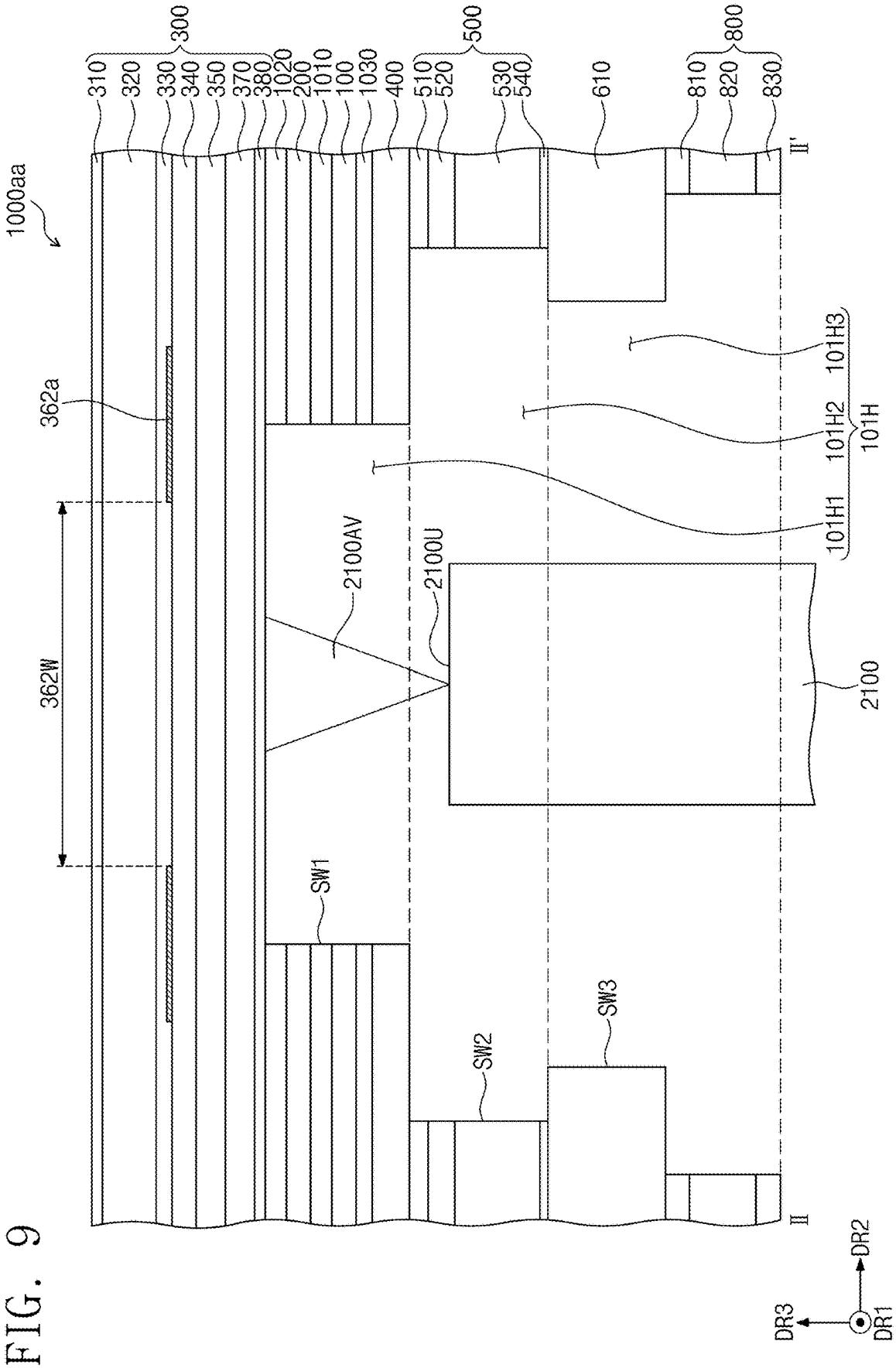
1000aa
300
310
320
330
340
350
370
380
1020
200
1010
100
1030
400
500
510
520
530
540
610
800
810
820
830
II'
362a
362W
101H3
101H2
101H
101H1
2100AV
2100U
2100
SW1
SW2
SW3
II
DR3
DR2
DR1

FIG. 10

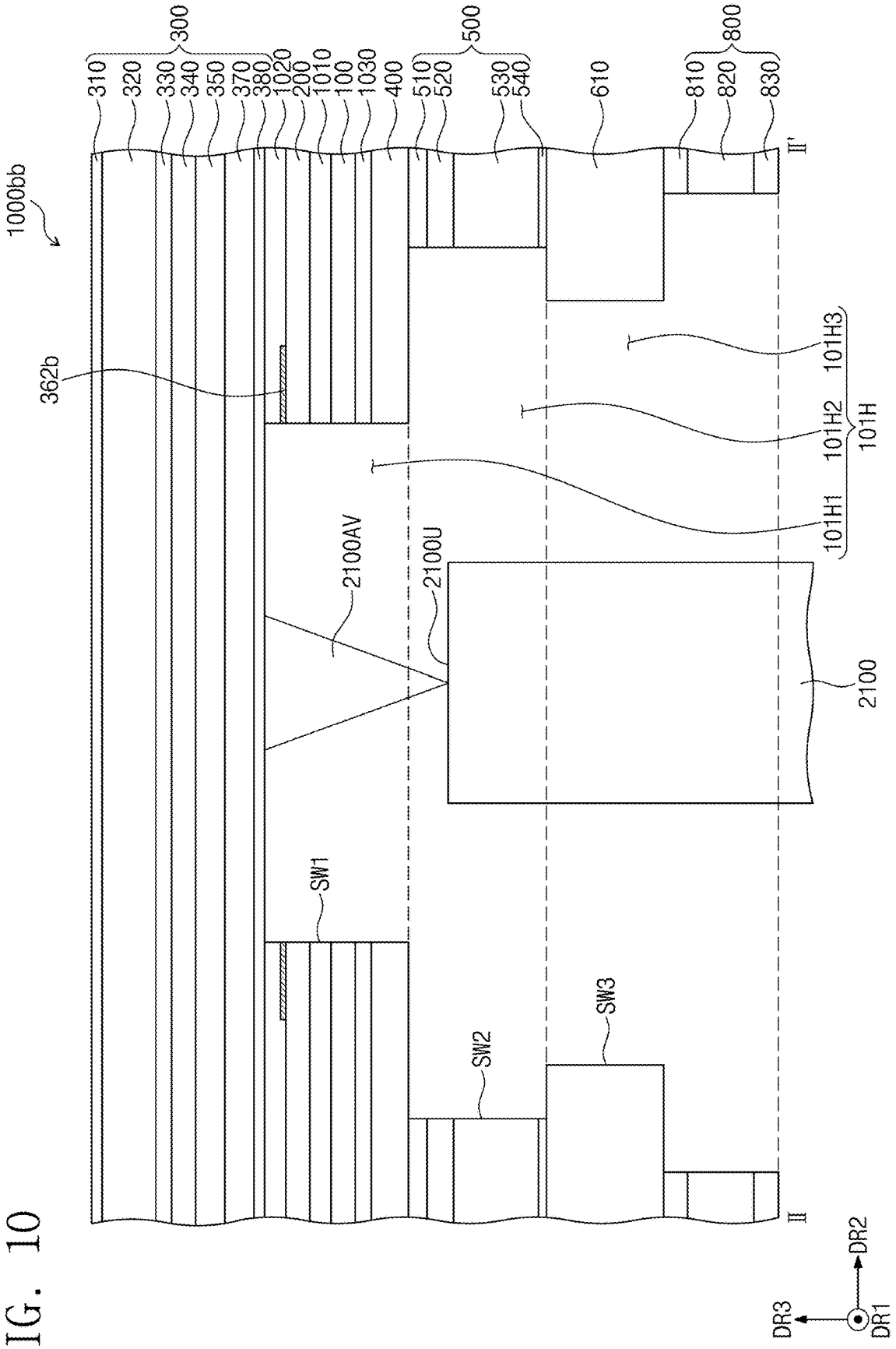
1000bb
300
310
320
330
340
350
370
380
1020
200
1010
100
1030
400
500
510
520
530
540
610
800
810
820
830
II'
362b
101H3
101H2
101H
101H1
2100AV
2100U
2100
SW1
SW2
SW3
II
DR3
DR2
DR1

FIG. 11

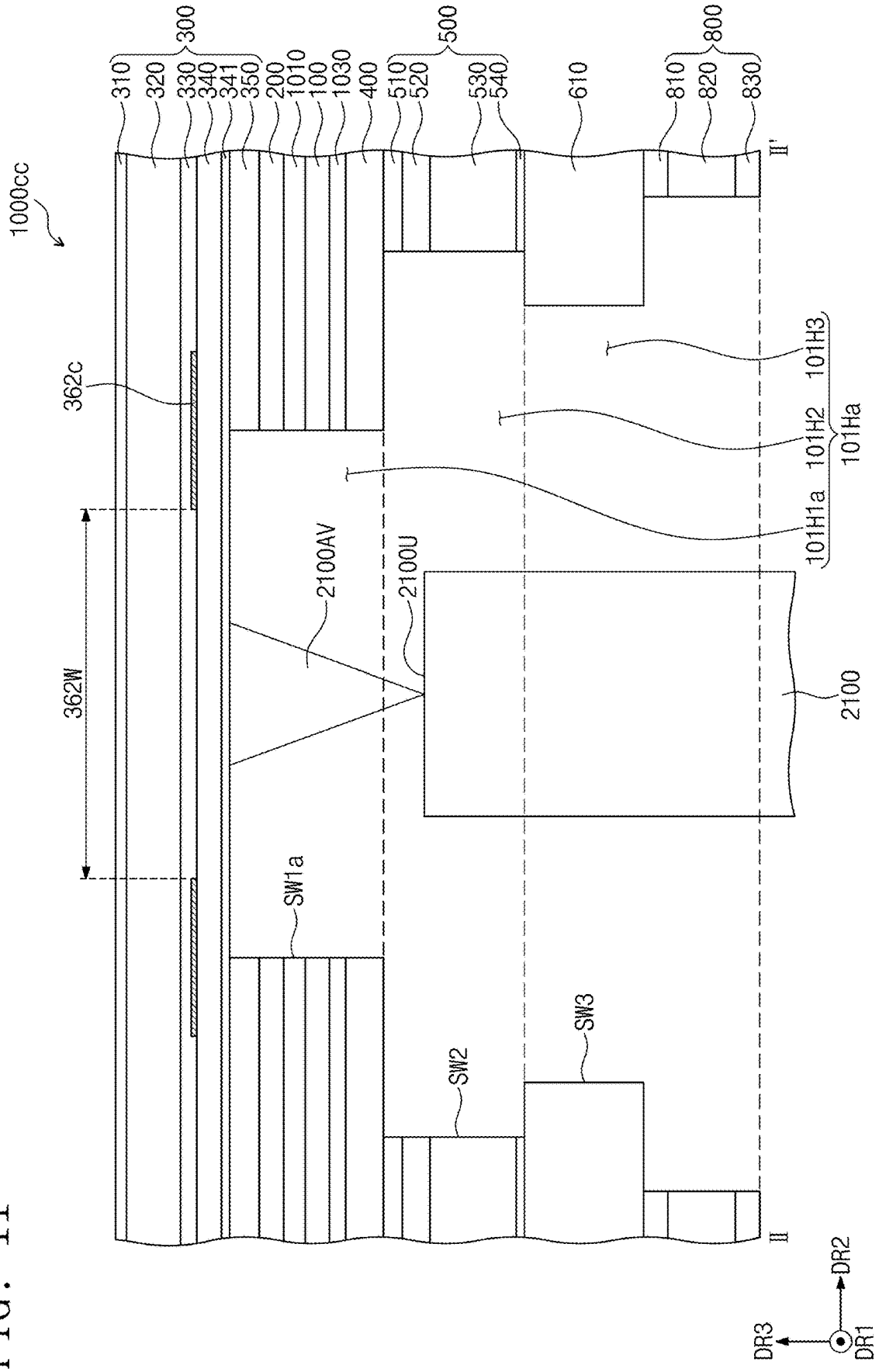
1000cc
300
310
320
330
340
341
350
200
1010
100
1030
400
500
510
520
530
540
610
800
810
820
830
II'
II
362c
362W
2100AV
2100U
2100
101H3
101H2
101H1a
101Ha
SW1a
SW2
SW3
DR1
DR2
DR3

FIG. 12

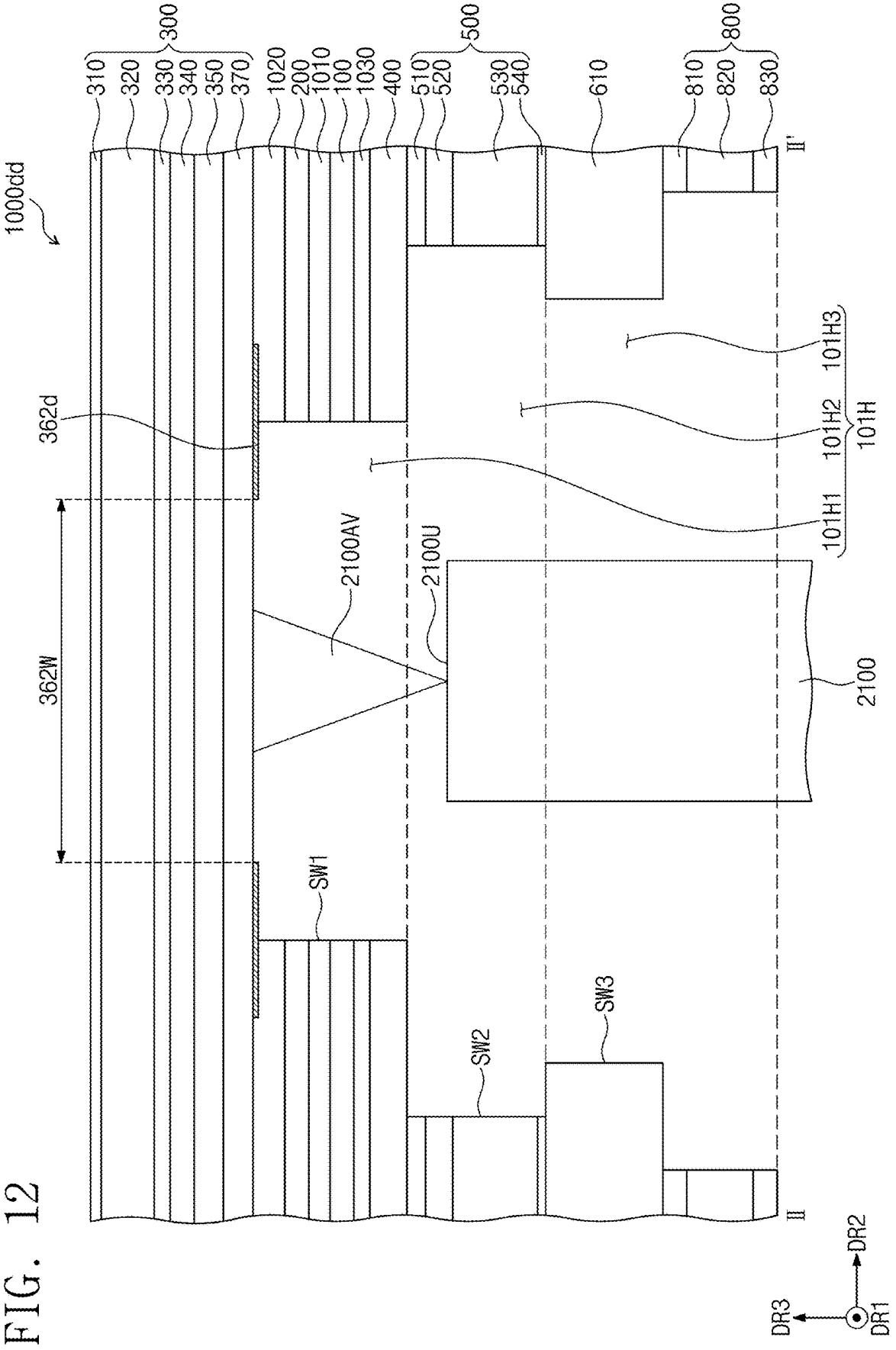
1000dd
300
310
320
330
340
350
370
1020
200
1010
100
1030
400
500
510
520
530
540
610
800
810
820
830
II'
II
362d
362W
101H3
101H2
101H
101H1
2100AV
2100U
2100
SW1
SW2
SW3
DR3
DR2
DR1

FIG. 13

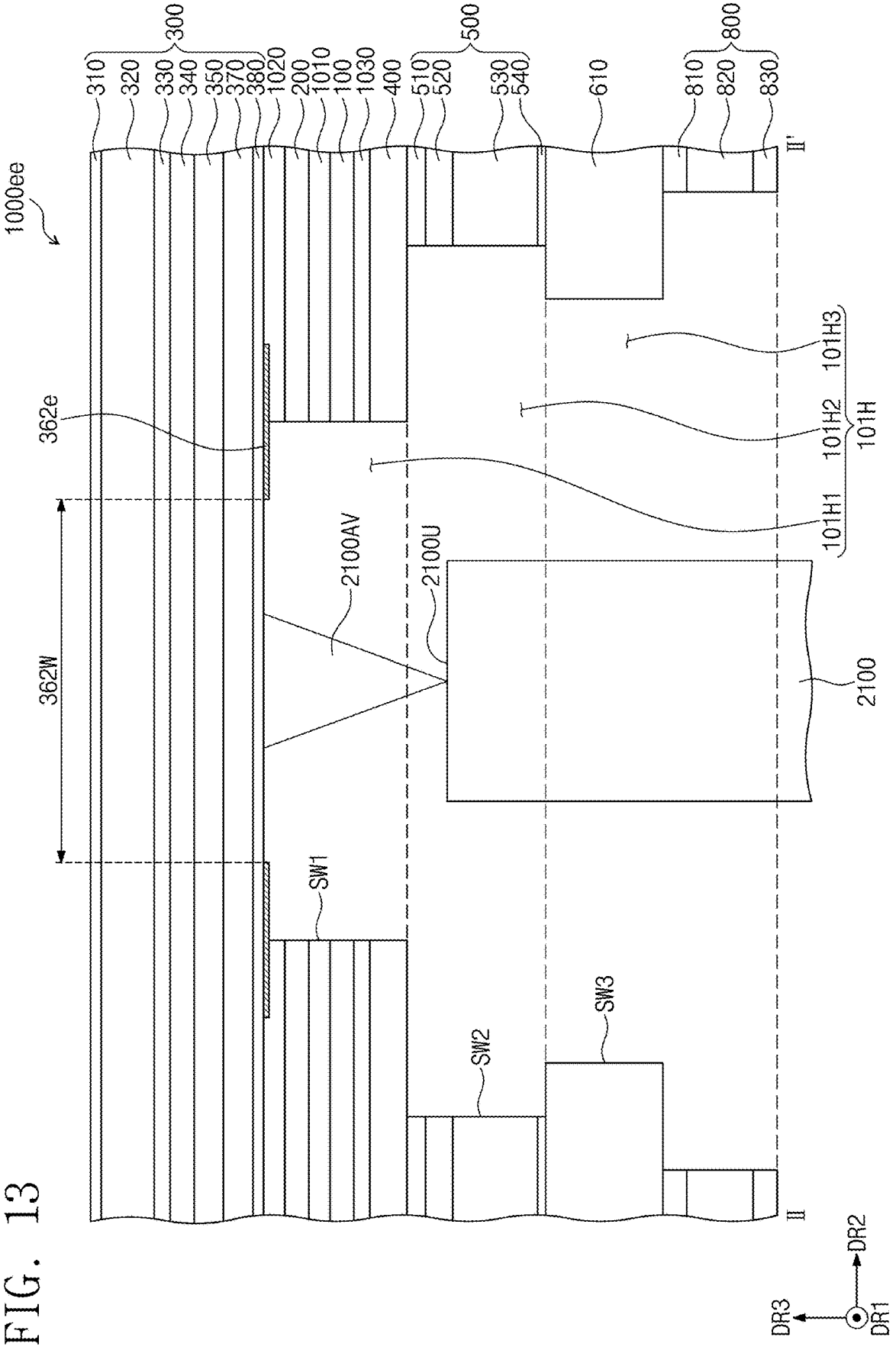
1000ee
300
310
320
330
340
350
370
380
1020
200
1010
100
1030
400
500
510
520
530
540
610
800
810
820
830
II'
II
362e
362W
2100AV
2100U
2100
101H3
101H2
101H1
101H
SW1
SW2
SW3
DR1
DR2
DR3

ELECTRONIC DEVICE

CROSS-REFERENCE TO RELATED APPLICATIONS

[0001] This application is a continuation of U.S. patent application Ser. No. 18/668,524, filed on May 20, 2024, which is a continuation of U.S. patent application Ser. No. 18/093,279, filed on Jan. 4, 2023, which is a continuation of U.S. patent application Ser. No. 17/142,048, filed on Jan. 5, 2021, which claims priority from and the benefit of Korean Patent Application No. 10-2020-0020250, filed on Feb. 19, 2020, which is hereby incorporated by reference for all purposes as if fully set forth herein.

BACKGROUND

Field

[0002] Exemplary implementations of the invention relate generally to an electronic device, and more specifically, to a foldable electronic device.

Discussion of the Background

[0003] An electronic device includes an active region that is activated by an electrical signal. The active region is used to sense an input applied from the outside and to display various images to provide information to a user. As, recently, various shapes of electronic devices are developed, it is necessary to diversify the shape of the active region.

[0004] The above information disclosed in this Background section is only for understanding of the background of the inventive concepts, and, therefore, it may contain information that does not constitute prior art.

SUMMARY

[0005] Electronic devices constructed according to the principles and exemplary implementations of the invention have an active region with an increased area. For example, one or more of electronic modules of the electronic device may overlap and/or be surrounded by the active region rather than a peripheral region to decrease the size of the peripheral region. Accordingly, the active region may have a relatively large area.

[0006] Electronic devices constructed according to the principles and exemplary implementations of the invention have improved reliability. For example, the electronic device may include first and second patterns to block light wherein the first pattern covers the peripheral region, and the second pattern surrounds an electronic module of the electronic device that is received in the active region. The electronic module may sense various types of signals such as visible light passing through the layers to generate images and/or electrical signals. The first pattern may be thicker than the second pattern to permit layers covering and/or disposed on the second pattern and the electronic module to be planarized, thereby reducing curvature and/or uneven portions in the covering layers. Therefore, it may be possible to reduce or prevent deterioration in the quality of the images and/or the electrical signals generated by the electronic module. In addition, the second pattern of the electronic device may be formed and/or printed on a layer having an uneven and/or a rough surface. Accordingly, the probability that the second pattern becomes detached from the layer may be reduced, thereby improving the reliability of the electronic device.

[0007] Additional features of the inventive concepts will be set forth in the description which follows, and in part will be apparent from the description, or may be learned by practice of the inventive concepts.

[0008] According to one aspect of the invention, an electronic device includes: a display panel having an active region and a peripheral region adjacent to the active region; an electronic module disposed below the display panel; a first light-blocking element disposed on the display panel and overlapping the peripheral region; and a second light-blocking element disposed on the electronic module with the display panel interposed therebetween. A hole may be at least partially surrounded by the active region is defined in a portion of the display panel. The second light blocking element is disposed in an area adjacent to the hole, when viewed in a plan view. The first light-blocking element has a first thickness and the second light-blocking element has a second thickness less than the first thickness.

[0009] The first light-blocking element may include a first light-blocking pattern having the first thickness, the second light-blocking element may include a second light-blocking pattern having the second thickness, and the first thickness may be greater than or equal to three times the second thickness.

[0010] The second thickness may range from about 0.5 μm to about 1.5 μm.

[0011] The electronic device may further include: a window disposed on the display panel; and an adhesive layer spaced apart from the display panel with the window interposed therebetween. The second light-blocking element may be disposed between the window and the adhesive layer.

[0012] The electronic device may further include a hard coating layer disposed below the window. The second light-blocking element and the hard coating layer may be spaced apart from each other with the window interposed therebetween.

[0013] The electronic device may further include an impact absorbing layer disposed on the display panel.

[0014] The electronic device may further include a hard coating layer disposed between the impact absorbing layer and the display panel and contacting with the impact absorbing layer. The second light-blocking element may be spaced apart from the impact absorbing layer with the hard coating layer interposed therebetween.

[0015] The second light-blocking element may be directly printed on a surface of the impact absorbing layer.

[0016] The electronic device may further include a hard coating layer disposed between the impact absorbing layer and the display panel and contacting with the impact absorbing layer. The second light-blocking element may be spaced apart from the hard coating layer with the impact absorbing layer interposed therebetween.

[0017] A hole may be defined in a portion of the display panel, and a portion of the hard coating layer may be exposed by the hole.

[0018] A first portion of the second light-blocking element may overlap the hole, and a second portion of the second light-blocking element may not overlap the hole.

[0019] The electronic device may further include a window disposed on the impact absorbing layer. The second light-blocking element may be disposed between the window and the impact absorbing layer or on the window.

[0020] The electronic device may further include an anti-reflection member disposed on the display panel. The second

light-blocking element may be disposed on the anti-reflection member, and the second light-blocking element may be spaced apart from the display panel with the anti-reflection member interposed therebetween.

[0021] The first light-blocking element may include first stacked layers, the second light-blocking element may include one or more second stacked layers, and the number of the first stacked layers may be greater than the number of the one or more second stacked layers.

[0022] The second light-blocking element may be at least partially surrounded by the active region, when viewed in a plan view.

[0023] The first light-blocking element may have a width greater than a width of the second light-blocking element.

[0024] The display panel may include a foldable area extending along a folding axis.

[0025] According to another aspect of the invention, an electronic device includes: a window; an impact absorbing layer disposed below the window; a hard coating layer disposed below the impact absorbing layer; a display panel disposed below the hard coating layer, the display panel including a hole defined therein; and a light-blocking pattern disposed on the impact absorbing layer near the hole.

[0026] The impact absorbing layer and the hard coating layer may be in direct contact with each other, the impact absorbing layer and the light-blocking pattern may be in direct contact with each other, and the impact absorbing layer may be disposed between the hard coating layer and the light-blocking pattern.

[0027] The electronic device may further include a peripheral light-blocking pattern disposed on a same layer as the light-blocking pattern. The peripheral light-blocking pattern may have a thickness greater than a thickness of the light-blocking pattern, and the peripheral light-blocking pattern may have a width greater than a width of the light-blocking pattern.

[0028] It is to be understood that both the foregoing general description and the following detailed description are exemplary and explanatory and are intended to provide further explanation of the invention as claimed.

BRIEF DESCRIPTION OF THE DRAWINGS

[0029] The accompanying drawings, which are included to provide a further understanding of the invention and are incorporated in and constitute a part of this specification, illustrate exemplary embodiments of the invention, and together with the description serve to explain the inventive concepts.

[0030] FIG. **1**A is a perspective view of an exemplary embodiment of an electronic device constructed according to the principles of the invention.

[0031] FIG. **1**B is a perspective view of the electronic device of FIG. **1**A as it is being folded along a folding axis.

[0032] FIG. **2** is a cross-sectional view taken along line I-I' of FIG. **1**A to illustrate an exemplary embodiment of the electronic device according to an embodiment.

[0033] FIG. **3**A is a cross-sectional view of an exemplary embodiment of the display panel of FIG. **2**.

[0034] FIG. **3**B is a cross-sectional view of another exemplary embodiment of the display panel of FIG. **2**.

[0035] FIG. **4**A is an exploded perspective view illustrating an exemplary embodiment of some elements of the electronic device of FIG. **1**A.

[0036] FIG. **4**B is a cross-sectional view taken along line IV-IV' of FIG. **4**A to illustrate an exemplary embodiment of the electronic device.

[0037] FIG. **4**C is a cross-sectional view taken along line IV-IV' of FIG. **4**A to illustrate another exemplary embodiment of the electronic device.

[0038] FIG. **5** is a rear view of an exemplary embodiment of some elements of the electronic device of FIG. **1**A.

[0039] FIG. **6** is a cross-sectional view taken along line II-II' of FIG. **1**A to illustrate an exemplary embodiment of the electronic device.

[0040] FIG. **7** is a plan view of an exemplary embodiment of the first to third sidewalls and the second light-blocking pattern of FIG. **6**.

[0041] FIG. **8** is a cross-sectional view taken along line III-III' of FIG. **1**A to illustrate an exemplary embodiment of the electronic device.

[0042] FIG. **9** is a cross-sectional view taken along line II-II' of FIG. **1**A to illustrate another exemplary embodiment of the electronic device.

[0043] FIG. **10** is a cross-sectional view taken along line II-II' of FIG. **1**A to illustrate still another exemplary embodiment of the electronic device.

[0044] FIG. **11** is a cross-sectional view taken along line II-II' of FIG. **1**A to illustrate yet another exemplary embodiment of the electronic device.

[0045] FIG. **12** is a cross-sectional view taken along line II-II' of FIG. **1**A to illustrate still yet another exemplary embodiment of the electronic device.

[0046] FIG. **13** is a cross-sectional view taken along line II-II' of FIG. **1**A to illustrate another exemplary embodiment of the electronic device.

DETAILED DESCRIPTION

[0047] In the following description, for the purposes of explanation, numerous specific details are set forth in order to provide a thorough understanding of various exemplary embodiments or implementations of the invention. As used herein "embodiments" and "implementations" are interchangeable words that are non-limiting examples of devices or methods employing one or more of the inventive concepts disclosed herein. It is apparent, however, that various exemplary embodiments may be practiced without these specific details or with one or more equivalent arrangements. In other instances, well-known structures and devices are shown in block diagram form in order to avoid unnecessarily obscuring various exemplary embodiments. Further, various exemplary embodiments may be different, but do not have to be exclusive. For example, specific shapes, configurations, and characteristics of an exemplary embodiment may be used or implemented in another exemplary embodiment without departing from the inventive concepts.

[0048] Unless otherwise specified, the illustrated exemplary embodiments are to be understood as providing exemplary features of varying detail of some ways in which the inventive concepts may be implemented in practice. Therefore, unless otherwise specified, the features, components, modules, layers, films, panels, regions, and/or aspects, etc. (hereinafter individually or collectively referred to as "elements"), of the various embodiments may be otherwise combined, separated, interchanged, and/or rearranged without departing from the inventive concepts.

[0049] The use of cross-hatching and/or shading in the accompanying drawings is generally provided to clarify

boundaries between adjacent elements. As such, neither the presence nor the absence of cross-hatching or shading conveys or indicates any preference or requirement for particular materials, material properties, dimensions, proportions, commonalities between illustrated elements, and/or any other characteristic, attribute, property, etc., of the elements, unless specified. Further, in the accompanying drawings, the size and relative sizes of elements may be exaggerated for clarity and/or descriptive purposes. When an exemplary embodiment may be implemented differently, a specific process order may be performed differently from the described order. For example, two consecutively described processes may be performed substantially at the same time or performed in an order opposite to the described order. Also, like reference numerals denote like elements.

[0050] When an element, such as a layer, is referred to as being "on," "connected to," or "coupled to" another element or layer, it may be directly on, connected to, or coupled to the other element or layer or intervening elements or layers may be present. When, however, an element or layer is referred to as being "directly on," "directly connected to," or "directly coupled to" another element or layer, there are no intervening elements or layers present. To this end, the term "connected" may refer to physical, electrical, and/or fluid connection, with or without intervening elements. Further, the D1-axis, the D2-axis, and the D3-axis are not limited to three axes of a rectangular coordinate system, such as the x, y, and z-axes, and may be interpreted in a broader sense. For example, the D1-axis, the D2-axis, and the D3-axis may be perpendicular to one another, or may represent different directions that are not perpendicular to one another. For the purposes of this disclosure, "at least one of X, Y, and Z" and "at least one selected from the group consisting of X, Y, and Z" may be construed as X only, Y only, Z only, or any combination of two or more of X, Y, and Z, such as, for instance, XYZ, XYY, YZ, and ZZ. As used herein, the term "and/or" includes any and all combinations of one or more of the associated listed items.

[0051] Although the terms "first," "second," etc. may be used herein to describe various types of elements, these elements should not be limited by these terms. These terms are used to distinguish one element from another element. Thus, a first element discussed below could be termed a second element without departing from the teachings of the disclosure.

[0052] Spatially relative terms, such as "beneath," "below," "under," "lower," "above," "upper," "over," "higher," "side" (e.g., as in "sidewall"), and the like, may be used herein for descriptive purposes, and, thereby, to describe one elements relationship to another element(s) as illustrated in the drawings. Spatially relative terms are intended to encompass different orientations of an apparatus in use, operation, and/or manufacture in addition to the orientation depicted in the drawings. For example, if the apparatus in the drawings is turned over, elements described as "below" or "beneath" other elements or features would then be oriented "above" the other elements or features. Thus, the exemplary term "below" can encompass both an orientation of above and below. Furthermore, the apparatus may be otherwise oriented (e.g., rotated 90 degrees or at other orientations), and, as such, the spatially relative descriptors used herein should be interpreted accordingly.

[0053] The terminology used herein is for the purpose of describing particular embodiments and is not intended to be limiting. As used herein, the singular forms, "a," "an," and "the" are intended to include the plural forms as well, unless the context clearly indicates otherwise. Moreover, the terms "comprises," "comprising," "includes," and/or "including." when used in this specification, specify the presence of stated features, integers, steps, operations, elements, components, and/or groups thereof, but do not preclude the presence or addition of one or more other features, integers, steps, operations, elements, components, and/or groups thereof. It is also noted that, as used herein, the terms "substantially," "about," and other similar terms, are used as terms of approximation and not as terms of degree, and, as such, are utilized to account for inherent deviations in measured, calculated, and/or provided values that would be recognized by one of ordinary skill in the art.

[0054] Various exemplary embodiments are described herein with reference to sectional and/or exploded illustrations that are schematic illustrations of idealized exemplary embodiments and/or intermediate structures. As such, variations from the shapes of the illustrations as a result, for example, of manufacturing techniques and/or tolerances, are to be expected. Thus, exemplary embodiments disclosed herein should not necessarily be construed as limited to the particular illustrated shapes of regions, but are to include deviations in shapes that result from, for instance, manufacturing. In this manner, regions illustrated in the drawings may be schematic in nature and the shapes of these regions may not reflect actual shapes of regions of a device and, as such, are not necessarily intended to be limiting.

[0055] Unless otherwise defined, all terms (including technical and scientific terms) used herein have the same meaning as commonly understood by one of ordinary skill in the art to which this disclosure is a part. Terms, such as those defined in commonly used dictionaries, should be interpreted as having a meaning that is consistent with their meaning in the context of the relevant art and should not be interpreted in an idealized or overly formal sense, unless expressly so defined herein.

[0056] FIG. **1**A is a perspective view of an exemplary embodiment of an electronic device constructed according to the principles of the invention. FIG. **1**B is a perspective view of the electronic device of FIG. **1**A as it is being folded along a folding axis. FIG. **1**A illustrates an unfolded position of an electronic device **1000**, and FIG. **1**B illustrates a folded position of the electronic device **1000**.

[0057] Referring to FIGS. **1**A and **1**B, the electronic device **1000** may be selectively activated by an electrical signal applied thereto. For example, the electronic device **1000** may be a computer device such as a cellular phone, a tablet, a car navigation system, a gaming machine, or a wearable device, but exemplary embodiments are not limited to these examples. FIG. **1**A illustrates an example in which the electronic device **1000** is the cellular phone.

[0058] The electronic device **1000** may include an active region **1000**A, which is used to display an image. When the electronic device **1000** is the unfolded position, the active region **1000**A may include a plane defined by a first direction DR**1** and a second direction DR**2**. The thickness direction of the electronic device **1000** may be parallel to a third direction DR**3** intersecting the first direction DR**1** and the second direction DR**2**. Accordingly, a front or top surface and a rear or bottom surface of each member constituting the electronic device **1000** may be defined based on the third direction DR**3**.

[0059] The active region **1000**A may include a first region **1000**A**1**, a second region **1000**A**2**, and a third region **1000**A**3**. The second region **1000**A**2** may be bent or folded along a folding axis FX extending in the second direction DR**2**. Accordingly, the first region **1000**A**1** and the third region **1000**A**3** may be referred to as non-foldable regions, and the second region **1000**A**2** may be referred to as a foldable region.

[0060] When the electronic device **1000** is folded, the first region **1000**A**1** and the third region **1000**A**3** may face each other. Accordingly, in a fully-folded position, the active region **1000**A may not be exposed to the outside, and this position may be referred to as an in-folding position. However, exemplary embodiments are not limited to this folding operation of the electronic device **1000**.

[0061] As an example, when the electronic device **1000** is folded, the first region **1000**A**1** and the third region **1000**A**3** may be opposite to each other. For example, in the folded position, the active region **1000**A may be exposed to the outside, and this position may be referred to as an out-folding position.

[0062] In an exemplary embodiment, only one of the in-folding and out-folding operations may be allowed for the electronic device **1000**. In another exemplary embodiment, both of the in-folding and out-folding operations may be allowed for the electronic device **1000**. In this case, a specific region (e.g., the second region **1000**A**2**) of the electronic device **1000** may be folded in an in-folding and out-folding manner. In other exemplary embodiment, a region of the electronic device **1000** may be folded in the in-folding manner, and another region of the electronic device **1000** may be folded in the out-folding manner.

[0063] FIGS. **1**A and **1**B illustrate an example, in which one foldable region and two non-foldable regions are provided, but the numbers of the foldable and non-foldable regions are not limited to this example. For instance, the electronic device **1000** may include two or more non-foldable regions and at least one foldable region, which is disposed between adjacent ones of the non-foldable regions.

[0064] FIGS. **1**A and **1**B illustrate an example, in which the folding axis FX is generally parallel to a short axis of the electronic device **1000**, but exemplary embodiments are not limited to this example. For example, the folding axis FX may be generally parallel to a long axis of the electronic device **1000** (e.g., the first direction DR**1**). In this case, the first region **1000**A**1**, the second region **1000**A**2**, and the third region **1000**A**3** may be sequentially arranged in the second direction DR**2**.

[0065] A plurality of sensing regions **100**SA**1**, **100**SA**2**, and **100**SA**3** may be defined in the electronic device **1000**. In the sensing regions **100**SA**1**, **100**SA**2**, and **100**SA**3**, the electronic device **1000** may include electronic modules to provide to and/or receive from the outside various types of signals, such as visible light and infrared light. FIG. **1**A illustrates an example, in which three sensing regions **100**SA**1**, **100**SA**2**, and **100**SA**3** are provided, but the number of the sensing regions is not limited to this example.

[0066] The sensing regions **100**SA**1**, **100**SA**2**, and **100**SA**3** may include a first sensing region **100**SA**1**, a second sensing region **100**SA**2**, and a third sensing region **100**SA**3**. For example, the first sensing region **100**SA**1** may overlap a camera module, the second sensing region **100**SA**2** and the third sensing region **100**SA**3** may overlap an ambient light sensor, but exemplary embodiments are not limited to this example.

[0067] Each of the electronic modules may receive an external input, which is provided through the first sensing region **100**SA**1**, the second sensing region **100**SA**2**, or the third sensing region **100**SA**3**, or may provide an output to the outside through the first sensing region **100**SA**1**, the second sensing region **100**SA**2**, or the third sensing region **100**SA**3**.

[0068] The first sensing region **100**SA**1** may be enclosed and/or completely surrounded by the active region **1000**A, and the second sensing region **100**SA**2** and the third sensing region **100**SA**3** may be included in the active region **1000**A. For example, the second sensing region **100**SA**2** and the third sensing region **100**SA**3** may display an image. Each of the first sensing region **100**SA**1**, the second sensing region **100**SA**2**, and the third sensing region **100**SA**3** may have a light transmittance (hereinafter "transmittance") that is higher than that of the active region **1000**A. In addition, the transmittance of the first sensing region **100**SA**1** may be higher than the transmittance of each of the second sensing region **100**SA**2** and the third sensing region **100**SA**3**.

[0069] According to an exemplary embodiment, at least one of the electronic modules may overlap the active region **1000**A, and others of the electronic modules may be enclosed and/or completely surrounded by the active region **1000**A. Thus, it is unnecessary to confine a region, on which the electronic modules will be disposed, within a peripheral region **1000**NA around the active region **1000**A. As a result, the ratio of an area of the active region **1000**A to a total area of the electronic device **1000** may be increased.

[0070] FIG. **2** is a cross-sectional view taken along line I-I' of FIG. **1**A to illustrate an exemplary embodiment of the electronic device. FIG. **3**A is a cross-sectional view of an exemplary embodiment of the display panel of FIG. **2**.

[0071] Referring to FIG. **2**, the electronic device **1000** may include a display panel **100**, upper functional layers, and lower functional layers.

[0072] Referring to FIG. **3**A, the display panel **100** may be an element configured to generate an image and to sense an input applied from the outside. For example, the display panel **100** may include a display layer **110** and a sensor layer **120**. The thickness of the display panel **100** may range from 25 μm to 35 μm (in particular, about 30 μm), but the thickness of the display panel **100** is not limited thereto.

[0073] The display layer **110** may be an element configured to substantially generate an image. The display layer **110** may be a light-emitting type display layer (e.g., an organic light emitting display layer, a quantum dot display layer, or a micro-LED display layer).

[0074] The display layer **110** may include a base layer **111**, a circuit layer **112**, a light-emitting device layer **113**, and an encapsulation layer **114**.

[0075] The base layer **111** may include a synthetic resin film. The synthetic resin layer may include a thermosetting resin. The base layer **111** may have a multi-layered structure. For example, the base layer **111** may have a triple-layered structure including a synthetic resin layer, an adhesive layer, and a synthetic resin layer. The synthetic resin layer may be a polyimide-based resin layer, but exemplary embodiments are not limited to a specific material. The synthetic resin layer may include at least one of acryl resins, methacryl resins, polyisoprene resins, vinyl resins, epoxy resins, ure-

thane resins, cellulose resins, siloxane resins, polyamide resins, or perylene resins. In addition, the base layer **111** may include a glass substrate or a substrate made of an organic/inorganic composite material.

[0076] The circuit layer **112** may be disposed on the base layer **111**. The circuit layer **112** may include an insulating layer, a semiconductor pattern, a conductive pattern, and a signal line. An insulating layer, a semiconductor layer, and a conductive layer may be formed on the base layer **111** using a coating or depositing process, and then may be selectively patterned through a plurality of photolithography processes. Thereafter, a semiconductor pattern, a conductive pattern, and a signal line included in the circuit layer **112** may be formed.

[0077] The light-emitting device layer **113** may be disposed on the circuit layer **112**. The light-emitting device layer **113** may include a light-emitting device. For example, the light-emitting device layer **113** may include an organic light emitting material, a quantum dot, a quantum rod, or a micro LED.

[0078] The encapsulation layer **114** may be disposed on the light-emitting device layer **113**. The encapsulation layer **114** may include an inorganic layer, an organic layer, and an inorganic layer, which are sequentially stacked, but the layers constituting the encapsulation layer **114** are not limited to this example.

[0079] The inorganic layers may protect the light-emitting device layer **113** from moisture and oxygen, and the organic layer may protect the light-emitting device layer **113** from a contamination material, such as dust particles. The inorganic layers may include a silicon nitride layer, a silicon oxynitride layer, a silicon oxide layer, a titanium oxide layer, or an aluminum oxide layer. The organic layer may include an acrylic organic layer, but exemplary embodiments are not limited thereto.

[0080] The sensor layer **120** may be disposed on the display layer **110**. The sensor layer **120** may sense an external input provided from the outside. For example, the external input may be a user input produced by a user. For example, the user input may include various types of external inputs, such as a part of a user's body, light, heat, pressure, or a pen.

[0081] The sensor layer **120** may be formed on the display layer **110** through a successive process. In this case, the sensor layer **120** is directly disposed on the display layer **110**. This means that a another element is not disposed between the sensor layer **120** and the display layer **110**. For example, an additional adhesive member may not be disposed between the sensor layer **120** and the display layer **110**.

[0082] In exemplary embodiments, the sensor layer **120** may be coupled to the display layer **110** through an adhesive member. The adhesive member may be a typical adhesive or sticking agent.

[0083] Referring back to FIG. **2**, the upper functional layers may be disposed on the display panel **100**. For example, the upper functional layers may include an anti-reflection member **200** and an upper member **300**.

[0084] The anti-reflection member **200** may be referred to as an anti-reflection layer. The anti-reflection member **200** may reduce reflectance of an external light that is incident from the outside. The anti-reflection member **200** may include an elongated-type synthetic resin film. For example, the anti-reflection member **200** may be provided by dyeing an iodine compound on a polyvinylalcohol (PVA) film. However, the material for the anti-reflection member **200** is not limited to this example. The thickness of the anti-reflection member **200** may range from 25 μm to 35 μm (in particular, about 31 μm), but the thickness of the anti-reflection member **200** is not limited thereto.

[0085] The anti-reflection member **200** may be coupled to the display panel **100** through a first adhesive layer **1010**. The first adhesive layer **1010** may be a transparent adhesive layer, such as a pressure sensitive adhesive (PSA) film, an optically clear adhesive (OCA) film, or an optically clear resin (OCR). An adhesive layer or agent, which will be described below, may be formed of or include a typical adhesive or sticking agent. The thickness of the first adhesive layer **1010** may range from 20 μm to 30 μm (in particular, 25 μm), but the thickness of the first adhesive layer **1010** is not limited thereto.

[0086] In an exemplary embodiment, the first adhesive layer **1010** may be omitted, and in this case, the anti-reflection member **200** may be directly disposed on the display panel **100**. In this case, an additional adhesive layer may not be disposed between the anti-reflection member **200** and the display panel **100**.

[0087] The upper member **300** may be disposed on the anti-reflection member **200**. The upper member **300** may include a first hard coating layer **310**, a protection layer **320**, a first upper adhesive layer **330**, a window **340**, a second upper adhesive layer **350**, a light-blocking layer **360**, an impact absorbing layer **370**, and a second hard coating layer **380**. Elements included in the upper member **300** are not limited to the afore-described elements. In an exemplary embodiment, at least one of the afore-described elements may be omitted, or in another exemplary embodiment, other elements may be added.

[0088] The first hard coating layer **310** may be the outermost layer of the electronic device **1000**. The first hard coating layer **310** may be a functional layer coated on the protection layer **320**, which is used to improve usage properties of the electronic device **1000**. For example, due to the first hard coating layer **310**, it may be possible to improve anti-fingerprint, contamination-preventing, scratch-preventing properties of the electronic device **1000**.

[0089] The protection layer **320** may be disposed below the first hard coating layer **310**. The protection layer **320** may protect elements disposed below the protection layer **320**. The first hard coating layer **310**, an anti-fingerprint layer, and so forth may be additionally provided on the protection layer **320** to improve chemical-resistant and wear resistant properties. The protection layer **320** may include a film whose elastic modulus at the room temperature is less than 15 GPa. The thickness of the protection layer **320** may range from 50 μm to 60 μm (in particular, 55 μm), but the thickness of the protection layer **320** is not limited thereto. In an exemplary embodiment, the protection layer **320** may be omitted.

[0090] The first upper adhesive layer **330** may be disposed below the protection layer **320**. The protection layer **320** and the window **340** may be coupled to each other by the first upper adhesive layer **330**. The thickness of the first upper adhesive layer **330** may range from 20 μm to 30 μm (in particular, about 25 μm), but the thickness of the first upper adhesive layer **330** is not limited thereto.

[0091] The window **340** may be disposed below the first upper adhesive layer **330**. The window **340** may be formed

of or include an optically-transparent insulating material. For example, the window **340** may include a glass substrate or a synthetic resin film. In the case where the window **340** is the glass substrate, the thickness of the window **340** may be smaller than or equal to 80 μm or may be, for example, about 30 μm, but the thickness of the window **340** is not limited thereto.

[0092] In the case where the window **340** is the synthetic resin film, the window **340** may include a polyimide (PI) film or a polyethylene terephthalate (PET) film.

[0093] The window **340** may have a multi- or single-layered structure. For example, the window **340** may include a plurality of synthetic resin films, which are coupled to each other by an adhesive agent, or may include a glass substrate and a synthetic resin film, which are coupled to each other by an adhesive agent.

[0094] The second upper adhesive layer **350** may be disposed below the window **340**. The window **340** and the impact absorbing layer **370** may be coupled to each other by the second upper adhesive layer **350**. The thickness of the second upper adhesive layer **350** may range from 30 μm to 40 μm (in particular, about 35 μm), but the thickness of the second upper adhesive layer **350** is not limited thereto.

[0095] In an exemplary embodiment, a sidewall **340**S of the window **340** and a sidewall **350**S of the second upper adhesive layer **350** may be disposed inside sidewalls of other layers (e.g., a sidewall **1000**S of the display panel **100** and a sidewall **320**S of the protection layer **320**), when viewed in a plan view. This means that the sidewalls **340**S and **350**S are closer to the active region **1000**A than other comparative elements.

[0096] The positional relationship between layers may be changed by the folding operation of the electronic device **1000**. According to an exemplary embodiment, since the sidewall **340**S of the window **340** is disposed inside the sidewall **1000**S of the display panel **100** and the sidewall **320**S of the protection layer **320**, it may be possible to prevent or suppress the sidewall **340**S of the window **340** from protruding out of the sidewall **320**S of the protection layer **320**, even when the positional relationship between layers is changed due to the folding operation. Accordingly, it may be possible to reduce the possibility that the sidewall **340**S of the window **340** is used as a pathway of an external impact. As a result, it may be possible to reduce the probability that a crack occurs in the window **340**.

[0097] A first distance **340**W between the sidewall **340**S of the window **340** and the sidewall **320**S of the protection layer **320** may be greater than a specific distance. Here, the first distance **340**W may be a distance that is measured in the first direction DR**1**. In addition, the first distance **340**W may correspond to a distance between the sidewall **340**S and the sidewall **320**S, when viewed in a plan view.

[0098] The first distance **340**W may range from 180 μm to 205 μm (in particular, 196 μm), but exemplary embodiments are not limited to this example. In an exemplary embodiment, the first distance **340**W may be greater than or equal to 50 μm and may be, for example, about 300 μm. As the first distance **340**W increases, the protrusion length of the protection layer **320** relative to the window **340** may increase, and a portion of the protection layer **320** may be bent and may be attached to other elements (e.g., a case). In addition, in the case where an area of the protection layer **320** increases, it may be possible to reduce the probability that contamination material, which is supplied from a region on the protection layer **320**, enters the region below the protection layer **320**.

[0099] Furthermore, the window **340** and the second upper adhesive layer **350** may be adhered to the impact absorbing layer **370** through a lamination process. The areas of the window **340** and the second upper adhesive layer **350** may be smaller than an area of the impact absorbing layer **370**, in consideration of the process tolerance in the lamination process. In addition, the area of the second upper adhesive layer **350** may be smaller than the area of the window **340**. In an exemplary embodiment, during the process of attaching the window **340**, pressure may be exerted on the second upper adhesive layer **350**. The second upper adhesive layer **350** may be elongated in the first and second directions DR**1** and DR**2** by the pressure. Here, to prevent the second upper adhesive layer **350** from protruding out of the window **340**, the area of the second upper adhesive layer **350** may be smaller than the area of the window **340**.

[0100] In the case where the first upper adhesive layer **330** and the second upper adhesive layer **350** are attached to each other, the window **340** may be hardly slipped during the folding operation of the electronic device **1000**, and in this case, a buckling phenomenon may occur in the window **340**. However, according to an exemplary embodiment, the area of the second upper adhesive layer **350** may be smaller than the area of the window **340**. Accordingly, the first upper adhesive layer **330** may not be attached to the second upper adhesive layer **350**, and it may be possible to prevent or suppress contamination material from being attached to the second upper adhesive layer **350**.

[0101] A second distance **350**W between the sidewall **350**S of the second upper adhesive layer **350** and the sidewall **320**S of the protection layer **320** may be greater than a specific distance. Here, the second distance **350**W may be a distance that is measured in the first direction DR**1**. In addition, the second distance **350**W may correspond to the distance between the sidewall **350**S and the sidewall **320**S, when viewed in a plan view.

[0102] In an exemplary embodiment, the second distance **350**W may be about 392 μm, but exemplary embodiments are not limited thereto. For example, the second distance **350**W may be within a range from 292 μm to 492 μm.

[0103] The impact absorbing layer **370** may be a functional layer used to protect the display panel **100** from an external impact. The impact absorbing layer **370** may be selected from one of films whose elastic modulus at the room temperature is greater than or equal to 1 GPa. The impact absorbing layer **370** may be an elongated film having an optical function. For example, the impact absorbing layer **370** may be an optic axis control film. The impact absorbing layer **370** may be, for example, a biaxially-oriented PET film. The thickness of the impact absorbing layer **370** may range from 35 μm to 45 μm (in particular, about 41 μm), but the thickness of the impact absorbing layer **370** is not limited thereto. In an exemplary embodiment, the impact absorbing layer **370** may be omitted.

[0104] The second hard coating layer **380** may be formed on a surface of the impact absorbing layer **370**. The second hard coating layer **380** may include an organic coating agent, an inorganic coating agent, or a coating agent made of an organic/inorganic composite material, and if any material is used to reduce a haze issue, it may be used for the second hard coating layer **380**. The term 'haze' may be defined as

the extent of diffusion of light that is incident into a test material, and if the haze is high, the light may be scattered to cause an opaque haze issue.

[0105] Each of the top and bottom surfaces of the impact absorbing layer **370** may include an uneven portion and/or surface. The top surface of the impact absorbing layer **370** may be in contact with the second upper adhesive layer **350**. Accordingly, the uneven portion of the top surface of the impact absorbing layer **370** may be filled with the second upper adhesive layer **350**. Thus, it may be possible to prevent an optical issue (e.g., an increase in haze) from occurring on the top surface of the impact absorbing layer **370**. The bottom surface of the impact absorbing layer **370** may be planarized by the second hard coating layer **380**. In the case where a first hole **101**H (e.g., see FIG. **4**A) is provided to cut a second adhesive layer **1020**, the bottom surface exposed by the first hole **101**H (e.g., see FIG. **4**A) may have a substantially smooth surface. Since the second hard coating layer **380** covers an uneven and/or rough surface of the impact absorbing layer **370**, it may be possible to suppress a haze issue which may occur in the uneven and/or rough surface.

[0106] The light-blocking layer **360** may be disposed between the impact absorbing layer **370** and the second upper adhesive layer **350**. The light-blocking layer **360** may be provided on the top surface of the impact absorbing layer **370** by a printing method. The light-blocking layer **360** may overlap the peripheral region **1000**NA. The light-blocking layer **360** may be a colored layer formed by a coating method. The light-blocking layer **360** may include a polymer resin and a pigment contained in the polymer resin. In an exemplary embodiment, the polymer resin may be an acrylic resin or polyester, and the pigment may be a carbon-based pigment. However, the material for the light-blocking layer **360** is not limited to this example.

[0107] The light-blocking layer **360** may be formed by a printing method, after forming the second hard coating layer **380** on the impact absorbing layer **370**. Since the impact absorbing layer **370** has an uneven and/or rough surface, compared with the second hard coating layer **380**, the adhesive strength may be stronger when the light-blocking layer **360** is printed on the impact absorbing layer **370** than when the light-blocking layer **360** is printed on the second hard coating layer **380**. Since the light-blocking layer **360** is directly printed on the uneven and/or rough surface of the impact absorbing layer **370**, the probability that the light-blocking layer **360** is detached from the impact absorbing layer **370** may be reduced. That is, since the probability that the light-blocking layer **360** becomes detached from a print-target surface (e.g., the impact absorbing layer **370**) is reduced, the product reliability of the electronic device **1000** may be improved.

[0108] The upper member **300** may be coupled to the anti-reflection member **200** by the second adhesive layer **1020**. The second adhesive layer **1020** may be formed of or include a typical adhesive or sticking agent. The thickness of the second adhesive layer **1020** may range from 20 μm to 30 μm (in particular, about 25 μm), but the thickness of the second adhesive layer **1020** is not limited thereto.

[0109] The lower functional layers may be disposed on the display panel **100**. For example, the lower functional layers may include a lower protection film **400**, a cushion member **500**, a first lower member **600**, a second lower member **700**, and a height-difference compensation member **800**. Elements included in the lower functional layers are not limited to the afore-described elements. In an exemplary embodiment, at least one of the afore-described elements may be omitted, or in another exemplary embodiment, other element may be added.

[0110] The lower protection film **400** may be coupled to the rear surface of the display panel **100** by a third adhesive layer **1030**. The lower protection film **400** may prevent a scratch from being formed on the rear surface of the display panel **100**, during the fabrication process of the display panel **100**. The lower protection film **400** may be a colored polyimide film. For example, the lower protection film **400** may be an opaque yellow film, but exemplary embodiments are not limited to this example.

[0111] The thickness of the lower protection film **400** may range from 30 μm to 50 μm (in particular, about 40 μm). The thickness of the third adhesive layer **1030** may range from 13 μm to 25 μm (in particular, about 18 μm). However, the thickness of the lower protection film **400** and the thickness of the third adhesive layer **1030** are not limited thereto.

[0112] The cushion member **500** may be disposed below the lower protection film **400**. The cushion member **500** may protect the display panel **100** from an impact provided through the underlying element. The impact-resistant property of the electronic device **1000** may be improved by the cushion member **500**.

[0113] The cushion member **500** may include a first cushion adhesive layer **510**, a barrier film **520**, a cushion layer **530**, and a second cushion adhesive layer **540**. Elements included in the cushion member **500** are not limited to the afore-described elements. In an exemplary embodiment, at least one of the afore-described elements may be omitted, or in another exemplary embodiment, other element may be added.

[0114] The first cushion adhesive layer **510** and the second cushion adhesive layer **540** may be formed of or include a typical adhesive or sticking agent. The first cushion adhesive layer **510** may be attached to the lower protection film **400**, and the second cushion adhesive layer **540** may be attached to the first lower member **600**. The thickness of the first cushion adhesive layer **510** may range from 20 μm to 30 μm (in particular, about 25 μm). The thickness of the second cushion adhesive layer **540** may range from 4 μm to 15 μm (in particular, about 8 μm). However, the thicknesses of the first cushion adhesive layer **510** and the second cushion adhesive layer **540** are not limited thereto.

[0115] The barrier film **520** may improve an impact-resistant property. The barrier film **520** may prevent the display panel **100** from being deformed. The barrier film **520** may be a synthetic resin film (e.g., a polyimide film), but exemplary embodiments are not limited to this example. The thickness of the barrier film **520** may range from 30 μm to 40 μm (in particular, about 35 μm), but the thickness of the barrier film **520** is not limited thereto.

[0116] The cushion layer **530** may include, for example, a foam or a sponge. The foam may include a polyurethane foam or a thermoplastic polyurethane foam. In the case where the cushion layer **530** includes the foam, the cushion layer **530** may be formed by using the barrier film **520** as a base layer. For example, the cushion layer **530** may be formed by foaming a foaming agent on the barrier film **520**.

[0117] The thickness of the cushion layer **530** may range from 80 μm to 120 μm (in particular, about 100 μm), but the thickness of the cushion layer **530** is not limited thereto.

[0118] At least one of the barrier film **520** and the cushion layer **530** may have a color absorbing light. For example, at least one of the barrier film **520** and the cushion layer **530** may be black. In this case, it may be possible to prevent elements, which are disposed below the cushion member **500**, from being recognized by a user.

[0119] The first lower member **600** may be disposed below the cushion member **500**. The first lower member **600** may include a plate **610**, a lower adhesive layer **620**, and a cover layer **630**. Elements included in the first lower member **600** are not limited to the afore-described elements. In an exemplary embodiment, at least one of the afore-described elements may be omitted, or in another exemplary embodiment, other element may be added.

[0120] The plate **610** may be formed of or include a material whose elastic modulus at the room temperature is greater than or equal to 60 GPa. For example, the plate **610** may be SUS304, but exemplary embodiments are not limited to this example. The plate **610** may support element disposed thereon. In addition, the heat-dissipation performance of the electronic device **1000** may be improved by the plate **610**.

[0121] An opening **611** may be defined in a portion of the plate **610**. The opening **611** may be defined in a region overlapped with the second region **1000A2**. When viewed in a plan view or in the third direction DR**3**, the opening **611** may overlap the second region **1000A2**. A shape of a portion of the plate **610** may be more easily deformed by the opening **611**.

[0122] The cover layer **630** may be attached to the plate **610** by the lower adhesive layer **620**. The lower adhesive layer **620** may be formed of or include a typical adhesive or sticking agent. The cover layer **630** may cover the opening **611** of the plate **610**. Accordingly, it may be possible to further prevent a contamination material from entering the opening **611**.

[0123] The cover layer **630** may be formed of or include a material, whose elastic modulus is lower than that of the plate **610**. For example, the cover layer **630** may be formed of or include thermoplastic polyurethane, but exemplary embodiments are not limited to this example.

[0124] The thickness of the plate **610** may range from 120 μm to 180 μm (in particular, about 150 μm). The thickness of the lower adhesive layer **620** may range from 4 μm to 15 μm (in particular, about 8 μm). The thickness of the cover layer **630** may range from 4 μm to 15 μm (in particular, about 8 μm). However, the thickness of the plate **610**, the thickness of the lower adhesive layer **620**, and the thickness of the cover layer **630** are not limited to the afore-described values.

[0125] The second lower members **700** may be disposed below the first lower member **600**. The second lower members **700** may be spaced apart from each other. For example, one of the second lower members **700** may be disposed in the first region **1000A1**, and another of the second lower members **700** may be disposed in the third region **1000A3**.

[0126] Each of the second lower members **700** may be attached to the first lower member **600** by fourth adhesive layers **1040**. For example, one of the fourth adhesive layers **1040** may be attached to a bottom surface of the first lower member **600**, which is overlapped with the first region **1000A1**, and another of the fourth adhesive layers **1040** may be attached to the bottom surface of the first lower member **600**, which is overlapped with the third region **1000A3**. In other words, the fourth adhesive layers **1040** may not overlap the second region **1000A2**. The thickness of each of the fourth adhesive layers **1040** may range from 8 μm to 15 μm (in particular, about 8 μm), but the thickness of each of the fourth adhesive layers **1040** is not limited thereto.

[0127] In an exemplary embodiment, a height-difference compensation film may be further disposed between each of the second lower members **700** and the first lower member **600**. For example, the height-difference compensation film may be provided in a region overlapped with the second region **1000A2**. A surface (hereinafter, a first surface) of the height-difference compensation film may have an adhesive strength that is lower than another surface. For example, the first surface may not have adhesive strength. The first surface may be a surface that faces the first lower member **600**.

[0128] Each of the second lower members **700** may include a lower plate **710**, a heat-dissipation sheet **720**, and an insulating film **730**. Elements included in each of the second lower members **700** are not limited to the afore-described elements. In an exemplary embodiment, at least one of the afore-described elements may be omitted, or in another exemplary embodiment, other element may be added.

[0129] In an exemplary embodiment, a plurality of the lower plates **710** may be provided. One of the lower plates **710** may overlap the first region **1000A1** and a portion of the second region **1000A2**, and another of the lower plates **710** may overlap another portion of the second region **1000A2** and the third region **1000A3**.

[0130] The lower plates **710** may be spaced apart from each other, in the second region **1000A2**. The lower plates **710** may be disposed as close as possible to each other and may support a region, in which the opening **611** of the plate **610** is formed. For example, the lower plates **710** may prevent a shape of a region, in which the opening **611** of the plate **610** is defined from being changed by pressure exerted by an element thereon.

[0131] In addition, the lower plates **710** may prevent elements disposed on the second lower members **700** from being deformed by elements disposed below the second lower members **700**.

[0132] Each of the lower plates **710** may include a metal alloy (e.g., copper alloy). However, the material for the lower plates **710** is not limited to this example. The thickness of each of the lower plates **710** may range from 60 μm to 100 μm (in particular, about 80 μm), but exemplary embodiments are not limited to this thickness of the lower plates **710**.

[0133] The heat-dissipation sheet **720** may be attached to a bottom surface of the lower plate **710**. The heat-dissipation sheet **720** may be a thermal conduction sheet having high thermal conductivity. For example, the heat-dissipation sheet **720** may include a heat-dissipation layer **721**, a first heat-dissipation adhesive layer **722**, a second heat-dissipation adhesive layer **723**, and a gap tape **724**.

[0134] The gap tape **724** may be attached to the first heat-dissipation adhesive layer **722** and the second heat-dissipation adhesive layer **723**, which are spaced apart from each other with the heat-dissipation layer **721** interposed therebetween. The gap tape **724** may be composed of a plurality of layers. For example, the gap tape **724** may include a substrate layer, an upper adhesive layer disposed on a top surface of the substrate layer, and a lower adhesive layer disposed on a bottom surface of the substrate layer.

[0135] The heat-dissipation layer **721** may be attached to the lower plate **710** by the first heat-dissipation adhesive layer **722**. The heat-dissipation layer **721** may be hermetically sealed by the first heat-dissipation adhesive layer **722**, the second heat-dissipation adhesive layer **723**, and the gap tape **724**. The heat-dissipation layer **721** may be a graphited polymer film. The polymer film may be, for example, a polyimide film. The thickness of each of the first heat-dissipation adhesive layer **722** and the second heat-dissipation adhesive layer **723** may range from 3 μm to 8 μm (in particular, about 5 μm). The thickness of each of the heat-dissipation layer **721** and the gap tape **724** may range from 10 μm to 25 μm (in particular, about 17 μm). However, the thickness of each of the first heat-dissipation adhesive layer **722**, the second heat-dissipation adhesive layer **723**, the heat-dissipation layer **721**, and the gap tape **724** may be not limited to the afore-described ranges or values.

[0136] The insulating film **730** may be attached to a bottom surface of the heat-dissipation sheet **720**. For example, the insulating film **730** may be attached to the second heat-dissipation adhesive layer **723**. The insulating film **730** may prevent rattling noises from occurring in the electronic device **1000**. The thickness of the insulating film **730** may be about 15 μm, but exemplary embodiments are not limited to this example.

[0137] The height-difference compensation member **800** may be attached to a bottom surface of the plate **610**. For example, the lower adhesive layer **620** may be attached to a bottom surface of a portion of the plate **610**, and the height-difference compensation member **800** may be attached to a bottom surface of another portion of the plate **610**.

[0138] The height-difference compensation member **800** may include a first compensation adhesive layer **810**, a height-difference compensation film **820**, and a second compensation adhesive layer **830**. The first compensation adhesive layer **810** may be attached to a bottom surface of the plate **610**. The height-difference compensation film **820** may be a synthetic resin film. The second compensation adhesive layer **830** may be attached to the bottom surface of the height-difference compensation film **820** and a set. The thickness of each of the first compensation adhesive layer **810** and the second compensation adhesive layer **830** may range from 13 μm to 25 μm (in particular, about 17 μm). The thickness of each of the first compensation adhesive layer **810** and the second compensation adhesive layer **830** is not limited to this example, and the thickness of the height-difference compensation film **820** may be determined depending on the thicknesses of the first and second compensation adhesive layers **810** and **830**.

[0139] FIG. **3**B is a cross-sectional view of another exemplary embodiment of the display panel of FIG. **2**.

[0140] Referring to FIG. **3**B, a display panel **100***aa* may further include an anti-reflection layer **130**, when compared with the display panel **100** described with reference to FIG. **3**A. In this case, the anti-reflection member **200** (e.g., see FIG. **2**) and the first adhesive layer **1010** (e.g., see FIG. **2**) may be omitted from the electronic device **1000** (e.g., see FIG. **2**) including the display panel **100***aa*.

[0141] The display panel **100***aa* may include the display layer **110**, the sensor layer **120**, and the anti-reflection layer **130**.

[0142] In an exemplary embodiment, the anti-reflection layer **130** may include color filters. The color filters may be arranged in a specific arrangement. The arrangement of the color filters may be determined in consideration of colors of lights to be emitted from pixels in the display layer **110**. In addition, the anti-reflection layer **130** may further include a black matrix, which is disposed adjacent to the color filters.

[0143] In an exemplary embodiment, the anti-reflection layer **130** may include a destructive interference structure. For example, the destructive interference structure may include a first reflection layer and a second reflection layer which are provided on different layers. The first reflection layer and the second reflection layer may allow a first reflection light and a second reflection light, which are respectively reflected by them, to destructively interfere with each other, and this may make it possible to reduce reflectance of the external light.

[0144] FIG. **4**A is an exploded perspective view illustrating an exemplary embodiment of some elements of the electronic device of FIG. **1**A.

[0145] FIG. **4**A exemplarily illustrates the light-blocking layer **360**, the display panel **100**, and electronic modules **2000** of the electronic device **1000** of FIG. **2**. The electronic modules **2000** may include a camera module **2100** and an ambient light sensor **2200**.

[0146] The ambient light sensor **2200** may include a light-emitting module **2210** and a light-receiving module **2220**. The light-emitting module **2210** and the light-receiving module **2220** may be mounted on a single substrate. The light-emitting module **2210** may be configured to generate and output light. For example, the light-emitting module **2210** may emit infrared light, and the light-emitting module **2210** may include a light-emitting diode. The light-receiving module **2220** may sense infrared light. The light-receiving module **2220** may be activated when the level of the infrared light is higher than a specific level. The light-receiving module **2220** may include a CMOS sensor. The infrared light emitted from the light-emitting module **2210** may be reflected by an external object (e.g., a user's finger or face) and may be incident into the light-receiving module **2220**.

[0147] An active region **100**A and a peripheral region **100**NA may be defined in the display panel **100**. The active region **100**A may correspond to the active region **1000**A shown in FIG. **1**A, and the peripheral region **100**NA may correspond to the peripheral region **1000**NA shown in FIG. **1**A.

[0148] The first sensing region **100**SA**1** overlapped with the camera module **2100** may be at least partially enclosed and/or completely surrounded by the active region **100**A, and the second sensing region **100**SA**2** and the third sensing region **100**SA**3**, which are respectively overlapped with the light-emitting module **2210** and the light-receiving module **2220**, may be portions of the active region **100**A.

[0149] The first hole **101**H may be defined in a portion of the display panel **100**. The first hole **101**H may be at least partially surrounded by the active region **100**A. The first hole **101**H may correspond to the first sensing region **100**SA**1**. As such, the camera module **2100** may receive an external light input, which is provided through the first hole **101**H.

[0150] The electronic device **1000** may include light-blocking elements disposed on the display panel **100** to block light. The light-blocking elements to block light may be associated with the peripheral region **100**NA and the first hole **101**H. In an exemplary embodiment, the light-blocking layer **360** may include a first light-blocking element in the

form of a first light-blocking pattern **361** and a second light-blocking element in the form of a second light-blocking pattern **362**. The first light-blocking pattern **361** may be a pattern covering and/or overlapping the peripheral region **100**NA. The second light-blocking pattern **362** may be disposed near and/or adjacent to the first hole **101**H. At least portion of the second light-blocking pattern **362** may overlap the first hole **101**H. When viewed in a plan view, the second light-blocking pattern **362** may enclose and/or completely surround the camera module **2100**. In addition, the second light-blocking pattern **362** may be enclosed and/or completely surrounded by the active region **100**A.

[0151] The first light-blocking pattern **361** and the second light-blocking pattern **362** may be disposed on the same layer. For example, the first light-blocking pattern **361** and the second light-blocking pattern **362** may be formed concurrently by the same process. The first light-blocking pattern **361** may be referred to as a peripheral light-blocking pattern, and the second light-blocking pattern **362** may be referred to as a light-blocking pattern.

[0152] FIG. **4**B is a cross-sectional view taken along line IV-IV' of FIG. **4**A to illustrate an exemplary embodiment of the electronic device.

[0153] Referring to FIGS. **4**A and **4**B, the first light-blocking pattern **361** and the second light-blocking pattern **362** may have different thicknesses from each other. For example, a first thickness TK**1** of the first light-blocking pattern **361** may be greater than a second thickness TK**2** of the second light-blocking pattern **362**. The first thickness TK**1** may be greater than the second thickness TK**2** and may be smaller than or equal to 10 times the second thickness TK**2**, and in an exemplary embodiment, the first thickness TK**1** may be great than or equal to 3 times the second thickness TK**2** and may be smaller than or equal to 10 times the second thickness TK**2**. However, the range of the second thickness TK**2** is not limited thereto. For example, the second thickness TK**2** may range from 0.5 μm to 1.5 μm, the first thickness TK**1** may range from 1.5 μm to 5 μm, but exemplary embodiments are not limited to this example. For example, the first light-blocking pattern **361** may be about 4 μm, and the second light-blocking pattern **362** may be about 1 μm.

[0154] In the case where the second thickness TK**2** is smaller than 0.5 μm, the second light-blocking pattern **362** may not block an external light sufficiently. In addition, in the case where the second thickness TK**2** is greater than 1.5 μm, an uneven portion may be formed in layers covering the second light-blocking pattern **362** by the second light-blocking pattern **362**. In the case where an uneven portion is formed in the layers, the sharpness of an image obtained by the camera module **2100** may be deteriorated.

[0155] According to an exemplary embodiment, the first light-blocking pattern **361** and the second light-blocking pattern **362** may be designed to have different thicknesses from each other. The first thickness TK**1** may be designed to be thicker than the second thickness TK**2**. Accordingly, the peripheral region **100**NA may be covered with the first light-blocking pattern **361** such that light may be blocked sufficiently. In addition, the second thickness TK**2** may be designed to be thinner than the first thickness TK**1**. As the second thickness TK**2** of the second light-blocking pattern **362** becomes thinner, curvature and/or an uneven portion generated in the layers covering the second light-blocking pattern **362** may be reduced and therefore the layers may be planarized. Accordingly, it may be possible to prevent or reduce an uneven portion from being formed in a region, which is overlapped with the camera module **2100**. As a result, it may be possible to prevent deterioration of the quality of images obtained by the camera module **2100**.

[0156] The width **361**TW of the first light-blocking pattern **361** may be greater than the width **362**TW of the second light-blocking pattern **362**. For example, the width **361**TW of the first light-blocking pattern **361** may be equal to or greater than 0.67 mm, and the width **362**TW of the second light-blocking pattern **362** may be about 0.52 mm. However, the width **361**TW of the first light-blocking pattern **361** and the width **362**TW of the second light-blocking pattern **362** are not limited to these values.

[0157] The first light-blocking pattern **361** may be disposed in the peripheral region **1000**NA (e.g., see FIG. **2**) of the electronic device **1000** (e.g., see FIG. **2**), and the second light-blocking pattern **362** may be disposed in the active region **1000**A (e.g., see FIG. **1**A) of the electronic device **1000** (e.g., see FIG. **2**). Thus, the first light-blocking pattern **361** may be covered with another element (e.g., a case) during the process of assembling the electronic device **1000** or may be partially cut by an additional cutting process. Accordingly, the first light-blocking pattern **361** may be designed to have a width greater than the second light-blocking pattern **362**.

[0158] FIG. **4**C is a cross-sectional view taken along line IV-IV' of FIG. **4**A to illustrate another exemplary embodiment of the electronic device.

[0159] Referring to FIGS. **4**A and **4**C, the first light-blocking pattern **361** may include one or more stacked layers in the form of printing layers **361**L**1**, **361**L**2**, and **361**L**3** stacked on the impact absorbing layer **370**, and the second light-blocking pattern **362** may include one or more stacked layers in the form of a printing layer **362**L disposed on the impact absorbing layer **370**. The number of the printing layers **361**L**1**, **361**L**2**, and **361**L**3** in the first light-blocking pattern **361** may be different from the number of a printing layer **362**L in the second light-blocking pattern **362**. In FIG. **4**C, one printing layer may mean a layer that is formed by a single printing process.

[0160] The first light-blocking pattern **361** may be provided by a triple color printing, and the second light-blocking pattern **362** may be provided by a single color printing. That is, the repetition number of the printing process to form the first light-blocking pattern **361** may be greater than that of the printing process to form the second light-blocking pattern **362**.

[0161] The number of layers included in each of the first and second light-blocking patterns **361** and **362** may not be limited to the example of FIG. **4**C, as long as the number of printing layers constituting the first light-blocking pattern **361** is greater the number of printing layers constituting the second light-blocking pattern **362**.

[0162] FIG. **5** is a rear view of an exemplary embodiment of some elements of the electronic device of FIG. **1**A.

[0163] The display panel **100**, the height-difference compensation member **800**, the heat-dissipation layer **721**, and the gap tape **724** are exemplarily illustrated in FIG. **5**.

[0164] Referring to FIGS. **4**A and **5**, a first hole **101**H, a second hole **102**H, and a third hole **103**H may correspond to the first sensing region **100**SA**1**, the second sensing region **100**SA**2**, and the third sensing region **100**SA**3**, respectively.

[0165] The first hole **101**H, the second hole **102**H, and the third hole **103**H may be formed by removing some elements of the electronic device **1000** (e.g., see FIG. **1**A), and this will be described in more detail below.

[0166] The first hole **101**H may overlap the height-difference compensation member **800**, and each of the second hole **102**H and the third hole **103**H may overlap the gap tape **724**. Accordingly, when viewed in a plan view, the first hole **101**H may be enclosed and/or completely surrounded by the height-difference compensation member **800**, and each of the second hole **102**H and the third hole **103**H may be enclosed and/or completely surrounded by the gap tape **724**.

[0167] FIG. **6** is a cross-sectional view taken along line II-II' of FIG. **1**A to illustrate an exemplary embodiment of the electronic device.

[0168] FIG. **6** illustrates the first hole **101**H, in which the camera module **2100** is inserted. The first hole **101**H may include a first hole portion **101**H**1**, a second hole portion **101**H**2**, and a third hole portion **101**H**3**.

[0169] The first hole portion **101**H**1** may be defined by a first sidewall SW**1**, the second hole portion **101**H**2** may be defined by a second sidewall SW**2**, and the third hole portion **101**H**3** may be defined by a third sidewall SW**3**.

[0170] The first hole portion **101**H**1**, the second hole portion **101**H**2**, and the third hole portion **101**H**3** may have different sizes from each other. For example, the first hole portion **101**H**1** may have the smallest size, the second hole portion **101**H**2** may have the largest size, and the third hole portion **101**H**3** may have a size between the sizes of the first and second hole portions **101**H**1** and **101**H**2**.

[0171] The first hole portion **101**H**1** may be formed by a laser cutting process. For example, a laser may be used to cut the layers from the lower protection film **400** to the second adhesive layer **1020**. The second hole portion **101**H**2** may be provided in the cushion member **500**, and in an exemplary embodiment, the second hole portion **101**H**2** may be formed by a shearing process on the cushion member **500**. The cushion member **500** with the second hole portion **101**H**2** may be attached to the lower protection film **400**. The third hole portion **101**H**3** may be formed by a shearing process on the plate **610** and the height-difference compensation member **800**.

[0172] According to an exemplary embodiment, the cushion member **500** with the second hole portion **101**H**2** may be attached to the plate **610** with the third hole portion **101**H**3**, and then, the cushion member **500** may be attached to the lower protection film **400**. Thus, the first hole portion **101**H**1**, the second hole portion **101**H**2**, and the third hole portion **101**H**3** may be formed to have different sizes from each other, in consideration of the part tolerance, the apparatus tolerance, and the folding tolerance.

[0173] The folding tolerance may be tolerance caused by the folding operation of the electronic device **1000**. For example, the folding tolerance may be determined in consideration of a movement distance (or slip) of each element, when the electronic device **1000** is fully folded, and an unrestored movement distance of each element, when the electronic device **1000** is unfolded after the folding operation.

[0174] According to an exemplary embodiment, since the sizes of the first hole portion **101**H**1**, the second hole portion **101**H**2**, and the third hole portion **101**H**3** are determined in consideration of the folding tolerance, any interference issue may not occur between an inner sidewall of the first hole **101**H and an electronic module (e.g., the camera module **2100**) inserted in the first hole **101**H. In addition, the second light-blocking pattern **362**, which is provided to correspond to the position of the first hole **101**H, may also be disposed in consideration of the folding tolerance. Thus, even when the electronic device **1000** is folded and unfolded, it may be possible to reduce the probability that the second light-blocking pattern **362** veils the active region **100**A (e.g., see FIG. **4**A) of the display panel **100** or veils a view angle region **2100**AV of the camera module **2100**.

[0175] According to an exemplary embodiment, the second light-blocking pattern **362** may be directly disposed on the impact absorbing layer **370**, and the second hard coating layer **380** may be directly disposed under the impact absorbing layer **370**. Thus, the second light-blocking pattern **362** may be in contact with the impact absorbing layer **370**, and the second hard coating layer **380** may be in contact with the impact absorbing layer **370**. The impact absorbing layer **370** may be disposed between the second light-blocking pattern **362** and the second hard coating layer **380**.

[0176] The second light-blocking pattern **362** may be formed by a printing method, after forming the second hard coating layer **380** on the impact absorbing layer **370**. Since the impact absorbing layer **370** has an uneven and/or rough surface, compared with the second hard coating layer **380**, an adhesive strength may be stronger when the second light-blocking pattern **362** is printed on the impact absorbing layer **370** than when the second light-blocking pattern **362** is printed on the second hard coating layer **380**. Since the second light-blocking pattern **362** is directly printed on the uneven surface and/or rough surface of the impact absorbing layer **370**, the probability that the second light-blocking pattern **362** is detached from the impact absorbing layer **370** may be reduced.

[0177] The camera module **2100** may be inserted in the first hole **101**H. The second upper adhesive layer **350**, the light-blocking layer **360**, the impact absorbing layer **370**, and the second hard coating layer **380** may be disposed between the camera module **2100** and the window **340**. Since at least one layer is disposed between the camera module **2100** and the window **340**, the possibility that the window **340** is damaged by the camera module **2100** may be reduced. Accordingly, product reliability of the electronic device may be improved.

[0178] A top surface **2100**U of the camera module **2100** may be located in the second hole portion **101**H**2** provided in the cushion member **500**. The second hole portion **101**H**2** may have the largest diameter, among the first to third hole portions **101**H**1**, **101**H**2**, and **101**H**3**. Thus, even when the positional relationship between layers is changed by the folding of the electronic device **1000**, the probability of the camera module **2100** colliding with the second sidewall SW**2** may be reduced. Accordingly, product reliability of the electronic device may be improved.

[0179] The position of the top surface **2100**U of the camera module **2100** is not limited to an example of FIG. **6**. For example, the top surface **2100**U of the camera module **2100** may be disposed in the first hole portion **101**H**1**. In this case, the width **362**W of the region enclosed and/or completely surrounded by the second light-blocking pattern **362** may be designed to have a reduced value, compared with the case that the top surface **2100**U of the camera module **2100** is disposed in the second hole portion **101**H**2**.

[0180] For example, the second light-blocking pattern **362** may be designed, such that the second light-blocking pattern **362** is not overlapped with the view angle region **2100**AV of the camera module **2100**. When viewed in a plan view, the second light-blocking pattern **362** may be spaced apart from the view angle region **2100**AV of the camera module **2100** by a specific distance, in consideration of process tolerance. Since a distance between the camera module **2100** and the second light-blocking pattern **362** is reduced, the second light-blocking pattern **362** may not block or veil the view angle region **2100**AV of the camera module **2100**, even when the width **362**W of the region enclosed and/or completely surrounded by the second light-blocking pattern **362** is reduced.

[0181] According to an exemplary embodiment, the distance DT between the camera module **2100** and the window **340** may be maintained to a value that is greater than a predetermined distance. In the case where the distance DT between the camera module **2100** and the window **340** is maintained to be greater than the predetermined distance, the probability that the window **340** is damaged by the camera module **2100** may be reduced. Accordingly, product reliability of the electronic device may be improved. The damage may be a crack, when the window **340** is a glass substrate and may be a dent, when the window **340** is a synthetic resin film.

[0182] For example, the distance DT may range from 60% to 200% of the sum of thicknesses of elements, which have the first holes **101**H defined therein and have moduli smaller than a reference modulus. In FIG. **6**, the elements with the first holes **101**H may correspond to elements that are disposed below the second hard coating layer **380**. The reference modulus may be less than 100 MPa, and in an exemplary embodiment, the reference modulus may range from 0 MPa to 50 MPa.

[0183] The elements satisfying such a condition may be the first adhesive layer **1010**, the second adhesive layer **1020**, the third adhesive layer **1030**, the first cushion adhesive layer **510**, the cushion layer **530**, the second cushion adhesive layer **540**, the first compensation adhesive layer **810**, and the second compensation adhesive layer **830**.

[0184] In an exemplary embodiment, The thickness of the first adhesive layer **1010** may be about 25 μm, the thickness of the second adhesive layer **1020** may be about 25 μm, the thickness of the third adhesive layer **1030** may be about 18 μm, the thickness of the first cushion adhesive layer **510** may be about 25 μm, the thickness of the cushion layer **530** may be about 100 μm, the thickness of the second cushion adhesive layer **540** may be about 8 μm, the thickness of the first compensation adhesive layer **810** may be about 17 μm, and the thickness of the second compensation adhesive layer **830** may be about 17 μm. Each of the thicknesses may have a process error. Thus, the sum of the thicknesses may range from 183 μm to 300 μm (in particular, about 235 μm). However, the sum of the thicknesses is not limited thereto.

[0185] The distance DT between the camera module **2100** and the window **340** may be determined in consideration of the highest compressibility of layers having moduli less than a reference modulus. For example, the distance DT may be greater than a value that is obtained by multiplying a sum of the thicknesses by the highest compressibility. The distance DT may be larger than 110 μm (e.g., larger than 141 μm).

[0186] According to an exemplary embodiment, even the elements are maximally compressed by pressure exerted during the usage of the electronic device **1000**, the window **340** and the camera module **2100** may be spaced apart from each other by a specific distance. Thus, the probability that the window **340** is damaged by the camera module **2100** may be significantly reduced. Accordingly, product reliability of the electronic device may be improved.

[0187] FIG. **7** is a plan view of an exemplary embodiment of the first to third sidewalls and the second light-blocking pattern of FIG. **6**.

[0188] The second light-blocking pattern **362**, the first sidewall SW**1**, the second sidewall SW**2**, and the third sidewall SW**3** are exemplarily illustrated in FIG. **7**.

[0189] When viewed in a plan view, the first sidewall SW**1** may overlap the second light-blocking pattern **362**, and the second sidewall SW**2** and the third sidewall SW**3** may not overlap the second light-blocking pattern **362**. When viewed in a plan view, the third sidewall SW**3** may enclose and/or completely surround the second light-blocking pattern **362**, and the second sidewall SW**2** may enclose and/or completely surround the third sidewall SW**3**.

[0190] Referring to FIGS. **6** and **7**, the first width WT**1** of the first hole portion **101**H**1**, the second width WT**2** of the second hole portion **101**H**2**, and the third width WT**3** of the third hole portion **101**H**3** may be different from each other. For example, the second width WT**2** may be greater than the first width WT**1** and the third width WT**3**, and the third width WT**3** may be greater than the first width WT**1**.

[0191] An inner diameter **362**ID of the second light-blocking pattern **362** may range from 2 mm to 3 mm (in particular, about 2.68 mm), and an outer diameter **362**OD of the second light-blocking pattern **362** may range from 3.2 mm to 4.2 mm (in particular, about 3.72 mm). Thus, the width **362**TW (e.g., see FIG. **4**B) of the second light-blocking pattern **362** may be about 0.52 mm.

[0192] The first hole portion **101**H**1** may correspond to a hole defined in the display panel **100**. When viewed in a plan view, a portion **362**P**1** of the second light-blocking pattern **362** may be disposed in the first hole portion **101**H**1**. In other words, the portion **362**P**1** of the second light-blocking pattern **362** may overlap the first hole portion **101**H**1**. In addition, another portion **362**P**2** of the second light-blocking pattern **362** may not overlap the first hole portion **101**H**1**.

[0193] FIG. **8** is a cross-sectional view taken along line III-III' of FIG. **1**A to illustrate an exemplary embodiment of the electronic device.

[0194] FIG. **8** illustrates the third hole **103**H, in which the light-receiving module **2220** is inserted. The second hole **102**H (e.g., see FIG. **5**), in which the light-emitting module **2210** (e.g., see FIG. **4**A) is inserted, may have substantially the same sectional structure as the third hole **103**H, and thus, one may understand technical features associated with the second hole **102**H (e.g., see FIG. **5**) through the following description.

[0195] The third hole **103**H may include a first hole portion **103**H**1** and a second hole portion **103**H**2**. The first hole portion **103**H**1** may be defined by a first sidewall SW**13**, and the second hole portion **103**H**2** may be defined by a second sidewall SW**23**.

[0196] The first hole portion **103**H**1** and the second hole portion **103**H**2** may have different sizes from each other. For example, the size of the first hole portion **103**H**1** may be greater than the size of the second hole portion **103**H**2**.

[0197] The first hole portion **103**H**1** may be provided in the cushion member **500**, and in an exemplary embodiment,

the first hole portion **103**H**1** may be formed by a shearing process on the cushion member **500**. The second hole portion **103**H**2** may be formed by a shearing process on the first lower member **600** and the second lower member **700**.

[0198] The third hole **103**H may not be provided in the display panel **100**. For example, the third hole **103**H may be provided in at least one of elements disposed below the display panel **100**. Thus, a portion of the display panel **100** overlapped with the third hole **103**H may display an image and may sense an input applied from the outside.

[0199] The first hole **101**H (e.g., see FIG. **6**) may penetrate the display panel **100**, but the third hole **103**H may not penetrate the display panel **100**. For example, the depth DT**1** of the first hole **101**H (e.g., see FIG. **6**) may be greater than a depth DT**2** of the third hole **103**H.

[0200] FIG. **9** is a cross-sectional view taken along line II-II' of FIG. **1**A to illustrate another exemplary embodiment of the electronic device. In the following description of FIG. **9**, an element previously described with reference to FIG. **6** may be identified by the same reference number without repeating the description thereof to avoid redundancy.

[0201] Referring to FIG. **9**, the second light-blocking pattern **362***a* of an electronic device **1000***aa* may be disposed between the window **340** and the first upper adhesive layer **330**. The first light-blocking pattern **361** (e.g., see FIG. **4**A) of the electronic device **1000***aa* may also be disposed between the window **340** and the first upper adhesive layer **330**.

[0202] The second light-blocking pattern **362***a* may be printed on a top surface of the window **340** and may be covered with the first upper adhesive layer **330**. The thickness of the second light-blocking pattern **362***a* may range from 0.5 μm to 1.5 μm (in particular, 1 μm). However, the thickness of the second light-blocking pattern **362***a* is not limited thereto.

[0203] According to an exemplary embodiment, the second light-blocking pattern **362***a* is disposed on the top surface of the window **340**, and it may be possible to reduce the probability that an uneven portion is formed in layers covering the second light-blocking pattern **362***a* since the second light-blocking pattern **362***a* has a relatively thin thickness. For example, the second light-blocking pattern **362***a* may have a thickness lower than that of another light-blocking pattern, such as the first light-blocking pattern **361** overlapping the peripheral region **1000**NA of FIG. **1**A. Accordingly, it may be possible to prevent deterioration in the quality of an image obtained by the camera module **2100**.

[0204] FIG. **10** is a cross-sectional view taken along line II-II' of FIG. **1**A to illustrate still another exemplary embodiment of the electronic device. In the following description of FIG. **10**, an element previously described with reference to FIG. **6** may be identified by the same reference number without repeating the description thereof to avoid redundancy.

[0205] Referring to FIG. **10**, the second light-blocking pattern **362***b* of an electronic device **1000***bb* may be disposed between the second adhesive layer **1020** and the anti-reflection member **200**. The first light-blocking pattern **361** of the electronic device **1000***bb* (e.g., see FIG. **4**A) may be disposed between the second adhesive layer **1020** and the anti-reflection member **200**. The second light-blocking pattern **362***b* may constitute a portion of the first sidewall SW**1** defining the first hole portion **101**H**1**.

[0206] The second light-blocking pattern **362***b* may be printed on the anti-reflection member **200** and may be covered with the second adhesive layer **1020**. The thickness of the second light-blocking pattern **362***b* may range from 0.5 μm to 1.5 μm (in particular, about 1 μm). However, the thickness of the second light-blocking pattern **362***b* is not limited thereto.

[0207] According to an exemplary embodiment, the second light-blocking pattern **362***b* is disposed on the top surface of the anti-reflection member **200**, and it may be possible to reduce the probability that an uneven portion is formed in layers covering the second light-blocking pattern **362***b* since the second light-blocking pattern **362***b* has a relatively thin thickness. For example, the second light-blocking pattern **362***b* may have a thickness lower than that of another light-blocking pattern, such as the first light-blocking pattern **361** overlapping the peripheral region **1000**NA of FIG. **1**A. Accordingly, it may be possible to prevent deterioration in the quality of an image obtained by the camera module **2100**.

[0208] FIG. **11** is a cross-sectional view taken along line II-II' of FIG. **1**A to illustrate yet another exemplary embodiment of the electronic device. In the following description of FIG. **11**, an element previously described with reference to FIG. **6** may be identified by the same reference number without repeating the description thereof to avoid redundancy.

[0209] An electronic device **1000***cc* of FIG. **11** may not include the impact absorbing layer **370**, the second hard coating layer **380**, and the second adhesive layer **1020** of FIG. **6**, when compared with the electronic device **1000** described with reference to FIG. **6**. In this case, the upper member **300** may be attached to the anti-reflection member **200** via the second upper adhesive layer **350**. In addition, the electronic device **1000***cc* may further include a second hard coating layer **341** disposed below the window **340**, when compared with the electronic device **1000** of FIG. **6**.

[0210] The first hole **101**Ha may include the first hole portion **101**H**1***a*, the second hole portion **101**H**2**, and the third hole portion **101**H**3**. The first hole portion **101**H**1***a* may be defined by the first sidewall SW**1***a*. The first hole portion **101**H**1***a* may be formed by a laser cutting process. The first sidewall SW**1***a* may include sidewalls of the lower protection film **400**, the third adhesive layer **1030**, the display panel **100**, the first adhesive layer **1010**, the anti-reflection member **200**, and the second upper adhesive layer **350**. After the formation of the first hole **101**Ha, the second upper adhesive layer **350** may be attached to the second hard coating layer **341**.

[0211] The second hard coating layer **341** may be exposed by the first hole portion **101**H**1***a*. The bottom surface of the window **340** may be planarized by the second hard coating layer **341**. Since the second hard coating layer **341** covers the bottom surface of the window **340** to protect the window **340** against other elements of the electronic device **1000***cc*, such as the camera module **2100**, it may be possible to prevent the window **340** from damaged due to the other elements such as the camera module **2100**.

[0212] The second light-blocking pattern **362***c* may be disposed between the window **340** and the first upper adhesive layer **330**. The first light-blocking pattern **361** of the electronic device **1000***cc* (e.g., see FIG. **4**A) may be disposed between the window **340** and the first upper adhesive layer **330**.

[0213] The second light-blocking pattern **362***c* may be printed on the top surface of the window **340** and may be covered with the first upper adhesive layer **330**. The thickness of the second light-blocking pattern **362***c* may range from 0.5 μm to 1.5 μm (in particular, about 1 μm). However, the thickness of the second light-blocking pattern **362***c* is not limited thereto.

[0214] According to an exemplary embodiment, the second light-blocking pattern **362***c* is disposed on the top surface of the window **340**, and it may be possible to reduce the probability that an uneven portion is formed in layers covering the second light-blocking pattern **362***c* since the second light-blocking pattern **362***c* has a relatively small thickness. For example, the second light-blocking pattern **362***c* may have a thickness less than that of another light-blocking pattern, such as the first light-blocking pattern **361** overlapping the peripheral region **1000**NA of FIG. **1**A. Accordingly, it may be possible to prevent deterioration in the quality of an image obtained by the camera module **2100**.

[0215] FIG. **12** is a cross-sectional view taken along line II-II' of FIG. **1**A to illustrate still yet another exemplary embodiment of the electronic device. In the following description of FIG. **12**, an element previously described with reference to FIG. **6** may be identified by the same reference number without repeating the description thereof to avoid redundancy.

[0216] Referring to FIG. **12**, an electronic device **1000***dd* may not include the second hard coating layer **380**, when compared with the electronic device **1000** described with reference to FIG. **6**.

[0217] The second light-blocking pattern **362***d* may be disposed on the top or bottom surface of the impact absorbing layer **370**. FIG. **12** illustrates an example, in which the second light-blocking pattern **362***d* is disposed on the bottom surface of the impact absorbing layer **370**. The second light-blocking pattern **362***d* may be disposed between the impact absorbing layer **370** and the second adhesive layer **1020**.

[0218] The distance between the camera module **2100** and the second light-blocking pattern **362***d* may be reduced, compared with the example of FIG. **6**. Thus, the second light-blocking pattern **362***d* may not veil the view angle region **2100**AV of the camera module **2100**, even when the width **362**W of the region, which is enclosed and/or completely surrounded by the second light-blocking pattern **362***d*, is reduced.

[0219] The thickness of the second light-blocking pattern **362***d* may range from 0.5 μm to 1.5 μm (in particular, about 1 μm). However, the thickness of the second light-blocking pattern **362***d* is not limited thereto. According to an exemplary embodiment, it may be possible to reduce the probability that an uneven portion is formed in layers covering the second light-blocking pattern **362***d* since the second light-blocking pattern **362***d* has a relatively thin thickness. Accordingly, it may be possible to prevent deterioration in the quality of an image obtained by the camera module **2100**.

[0220] FIG. **13** is a cross-sectional view taken along line II-II' of FIG. **1**A to illustrate another exemplary embodiment of the electronic device. In the following description of FIG. **13**, an element previously described with reference to FIG. **6** may be identified by the same reference number without repeating the description thereof to avoid redundancy.

[0221] Referring to FIG. **13**, an electronic device **1000***ee* may differ from the electronic device **1000** described with reference to FIG. **6** in terms of the position of the second light-blocking pattern **362***e*.

[0222] The second light-blocking pattern **362***e* may be disposed below the second hard coating layer **380**. The second light-blocking pattern **362***e* may be disposed between the second adhesive layer **1020** and the second hard coating layer **380**. The first light-blocking pattern **361** (e.g., see FIG. **4**A) of the electronic device **1000***ee* may be disposed between the second adhesive layer **1020** and the second hard coating layer **380**.

[0223] The distance between the camera module **2100** and the second light-blocking pattern **362***e* may be reduced, compared with the example of FIG. **6**. Thus, the second light-blocking pattern **362***e* may not veil the view angle region **2100**AV of the camera module **2100**, even when the width **362**W of the region, which is enclosed and/or completely surrounded by the second light-blocking pattern **362***e*, is reduced.

[0224] In addition, the thickness of the second light-blocking pattern **362***e* may range from 0.5 μm to 1.5 μm (in particular, 1 μm). However, the thickness of the second light-blocking pattern **362***e* is not limited thereto. According to an exemplary embodiment, it may be possible to reduce the probability that an uneven portion is formed in layers covering the second light-blocking pattern **362***e* since the second light-blocking pattern **362***e* has a relatively small thickness. For example, the second light-blocking pattern **362***e* may have a thickness less than 5 that of another light-blocking pattern, such as the first light-blocking pattern **361** overlapping the peripheral region **1000**NA of FIG. **1**A. Accordingly, it may be possible to prevent deterioration in the image quality of an image obtained by the camera module **2100**.

[0225] Although certain exemplary embodiments and implementations have been described herein, other embodiments and modifications will be apparent from this description. Accordingly, the inventive concepts are not limited to such embodiments, but rather to the broader scope of the appended claims and various obvious modifications and equivalent arrangements as would be apparent to a person of ordinary skill in the art.

What is claimed is:

1. An electronic device, comprising:

a display panel in which a hole is defined;

a plurality of layers disposed on the display panel and including a first layer, a second layer attached to a first surface of the first layer, and a hard coating layer disposed on a second surface of the first layer opposing the first surface of the first layer; and

a light-blocking pattern disposed between the first layer and the second layer.

2. The electronic device of claim **1**, further comprising a camera module disposed below the display panel and overlapping with the hole.

3. The electronic device of claim **2**, wherein a portion of the hard coating layer is exposed by the hole and faces the camera module.

4. The electronic device of claim **1**, wherein the plurality of layers further includes a window,

the first layer, the second layer, the hard coating layer and the light-blocking pattern are disposed between the window and the display panel, and

the first layer is an impact absorbing layer.

5. The electronic device of claim **4**, wherein the second layer is attached to the window and the first surface of the first layer.

6. The electronic device of claim **1**, wherein each of the first surface of the first layer and the second surface of the first layer comprises an uneven surface.

7. The electronic device of claim **1**, further comprising a peripheral light-blocking pattern surrounding at least a portion of the light-blocking pattern, when viewed in a plan view,

wherein a thickness of the light-blocking pattern is less than or equal to a thickness of the peripheral light-blocking pattern.

8. The electronic device of claim **7**, wherein the thickness of the peripheral light-blocking pattern is greater than or equal to three times the thickness of the light-blocking pattern.

9. The electronic device of claim **1**, wherein a thickness of the light-blocking pattern ranges from 0.5 μm to 1.5 μm.

10. The electronic device of claim **1**, wherein at least a portion of the light-blocking pattern overlaps the hole.

11. The electronic device of claim **1**, wherein the light-blocking pattern is completely covered by the second layer, and

wherein the second layer overlaps the hole, when viewed in a plan view.

12. The electronic device of claim **1**, wherein an opening overlapping the hole is defined in the light-blocking pattern, and

a size of the opening is smaller than a size of the hole.

13. An electronic device, comprising:

a display panel in which a hole is defined;

a hard coating layer disposed on the display panel and overlapping with the hole;

an impact absorbing layer disposed on the hard coating layer and overlapping the hole; and

a light-blocking pattern in which an opening overlapping the hole is defined,

wherein a surface of the impact absorbing layer is rougher than a surface of the hard coating layer.

14. The electronic device of claim **13**, wherein the impact absorbing layer includes a first surface in contact with the light-blocking pattern and a second surface in contact with the hard coating layer, wherein the second surface is disposed between the first surface and the display panel.

15. The electronic device of claim **14**, wherein each of the first surface and the second surface comprises an uneven surface.

16. The electronic device of claim **13**, further comprising a camera module disposed below the display panel and overlapping with the hole,

wherein a portion of the hard coating layer is exposed by the hole and faces the camera module.

17. The electronic device of claim **13**, wherein at least a portion of the light-blocking pattern overlaps the hole.

18. The electronic device of claim **13**, wherein the light-blocking pattern includes a first edge defining the opening and a second edge surrounding the first edge, wherein the first edge is smaller than the hole and the second edge is larger than the hole.

19. The electronic device of claim **13**, further comprising a peripheral light-blocking pattern surrounding at least a portion of the light-blocking pattern, when viewed in a plan view,

wherein a thickness of the light-blocking pattern is less than or equal to a thickness of the peripheral light-blocking pattern.

20. The electronic device of claim **13**, wherein the thickness of the peripheral light-blocking pattern is greater than or equal to three times the thickness of the light-blocking pattern.

* * * * *