US012410023B2

(12) **United States Patent**
Shimosaka et al.

(10) **Patent No.: US 12,410,023 B2**
(45) **Date of Patent: Sep. 9, 2025**

(54) **MEDIUM CONVEYING APPARATUS**

(71) Applicant: **PFU LIMITED**, Kahoku (JP)

(72) Inventors: **Kiichiro Shimosaka**, Kahoku (JP); **Syuichi Morikawa**, Kahoku (JP)

(73) Assignee: **PFU LIMITED**, Kahoku (JP)

(*) Notice: Subject to any disclaimer, the term of this patent is extended or adjusted under 35 U.S.C. 154(b) by 32 days.

(21) Appl. No.: **18/589,111**

(22) Filed: **Feb. 27, 2024**

(65) **Prior Publication Data**

US 2024/0199358 A1 Jun. 20, 2024

Related U.S. Application Data

(63) Continuation of application No. PCT/JP2021/034164, filed on Sep. 16, 2021.

(51) **Int. Cl.**

B65H 1/26	(2006.01)
B65H 1/02	(2006.01)
B65H 1/06	(2006.01)

(52) **U.S. Cl.**

CPC ***B65H 1/26*** (2013.01); *B65H 1/027* (2013.01); *B65H 1/06* (2013.01); *B65H 2402/10* (2013.01);

(Continued)

(58) **Field of Classification Search**

CPC B65H 1/027; B65H 1/26; B65H 2402/10; B65H 2402/30; B65H 2402/31;

(Continued)

(56) **References Cited**

U.S. PATENT DOCUMENTS

8,820,742	B2 *	9/2014	Koyanagi	B65H 31/24 271/224
2018/0194579	A1 *	7/2018	Harada	B65H 3/523
2024/0391715	A1 *	11/2024	Shimosaka	B65H 5/06

FOREIGN PATENT DOCUMENTS

JP	S61-95732	U	6/1986
JP	H04-338052	A	11/1992

(Continued)

OTHER PUBLICATIONS

International Search Report dated Oct. 12, 2021 for corresponding PCT Application No. PCT/JP2021/034164 (3 pages) with English Translation (2 pages).

(Continued)

Primary Examiner — Michael McCullough
(74) *Attorney, Agent, or Firm* — WOMBLE BOND DICKINSON (US) LLP

(57) **ABSTRACT**

A medium conveying apparatus includes: a housing having an engaged portion and a guide surface; a placement tray having an engaging portion and a placement surface; and a side guide mounted on the placement surface and protruding downstream beyond the placement tray to restrict a medium in a width direction. The engaged portion restricts entry or removal of the engaging portion when the placement surface forms a first angle with the guide surface, and allows entry or removal of the engaging portion when the placement surface forms a second angle different from the first angle with the guide surface in attachment of the placement tray to the housing or detachment of the placement tray from the housing. A downstream end of the side guide in the conveying direction does not intersect with the guide surface as viewed from the width direction when the placement surface forms the second angle.

6 Claims, 18 Drawing Sheets

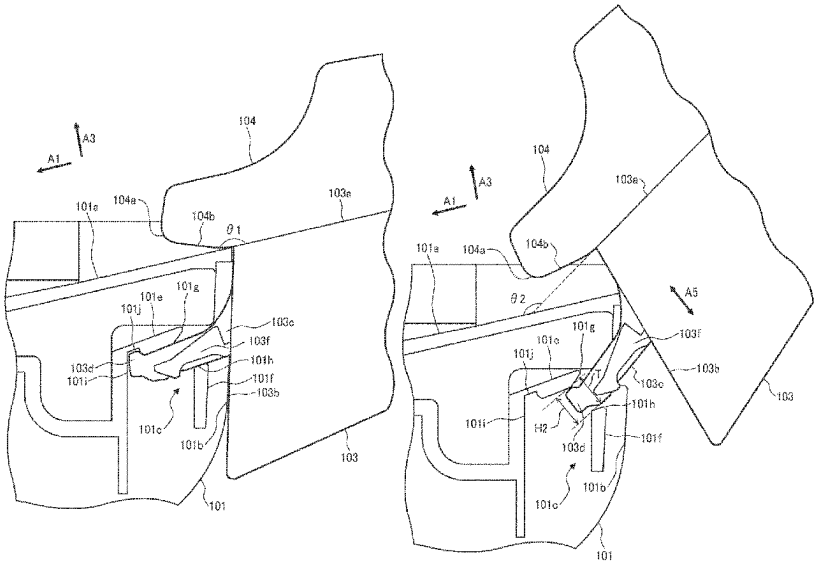

(52) **U.S. Cl.**
CPC *B65H 2402/31* (2013.01); *B65H 2402/53* (2013.01); *B65H 2405/32* (2013.01); *B65H 2801/12* (2013.01)

(58) **Field of Classification Search**
CPC B65H 2402/33; B65H 2405/31; B65H 2405/32; G03G 2215/00392
See application file for complete search history.

(56) **References Cited**

FOREIGN PATENT DOCUMENTS

JP	H06-9115	A		1/1994
JP	2002308511	A	*	10/2002
JP	2007-276908	A		10/2007
JP	2010-235258	A		10/2010
JP	2018-127331	A		8/2018
JP	2005-255403	A		6/2024

OTHER PUBLICATIONS

Written Opinion dated Oct. 12, 2021 for corresponding PCT Application No. PCT/JP2021/034164 (3 pages) with English Translation (3 pages).
International Preliminary Report on Patentability dated Mar. 5, 2024 for corresponding PCT Application No. PCT/JP2021/034164 (4 pages) with English Translation (4 pages).

* cited by examiner

FIG. 1

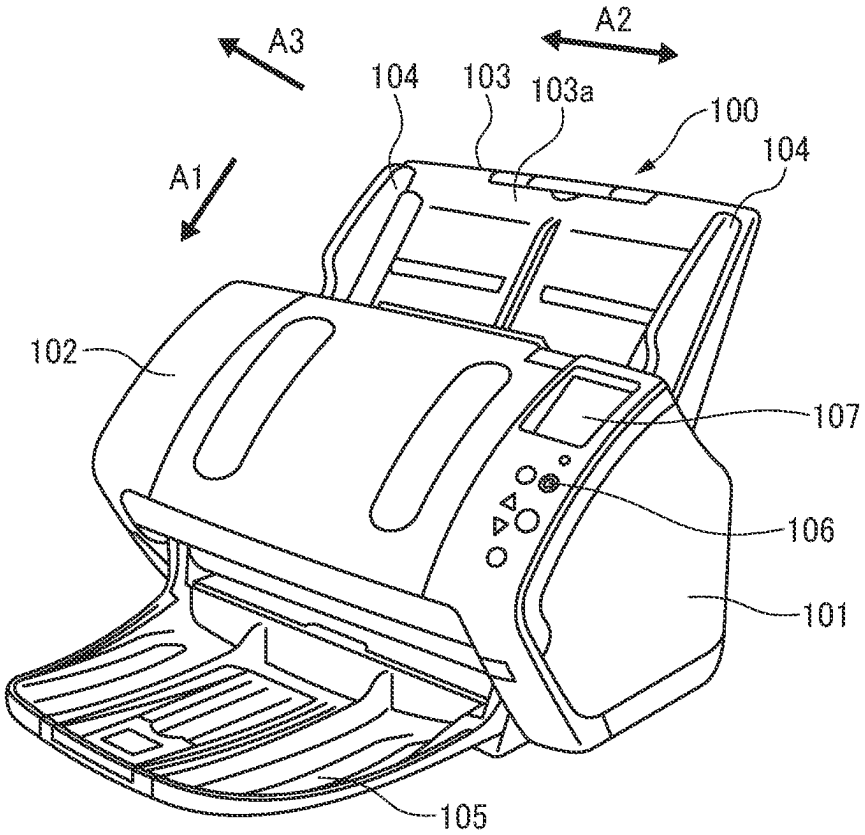

FIG. 2B

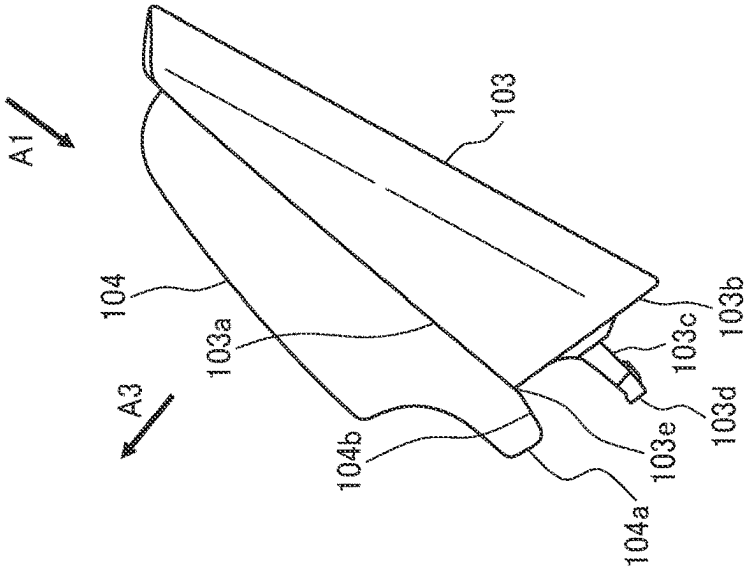
A1
A3
103
104
103a
104b
104a
103e
103d
103c
103b

FIG. 2A

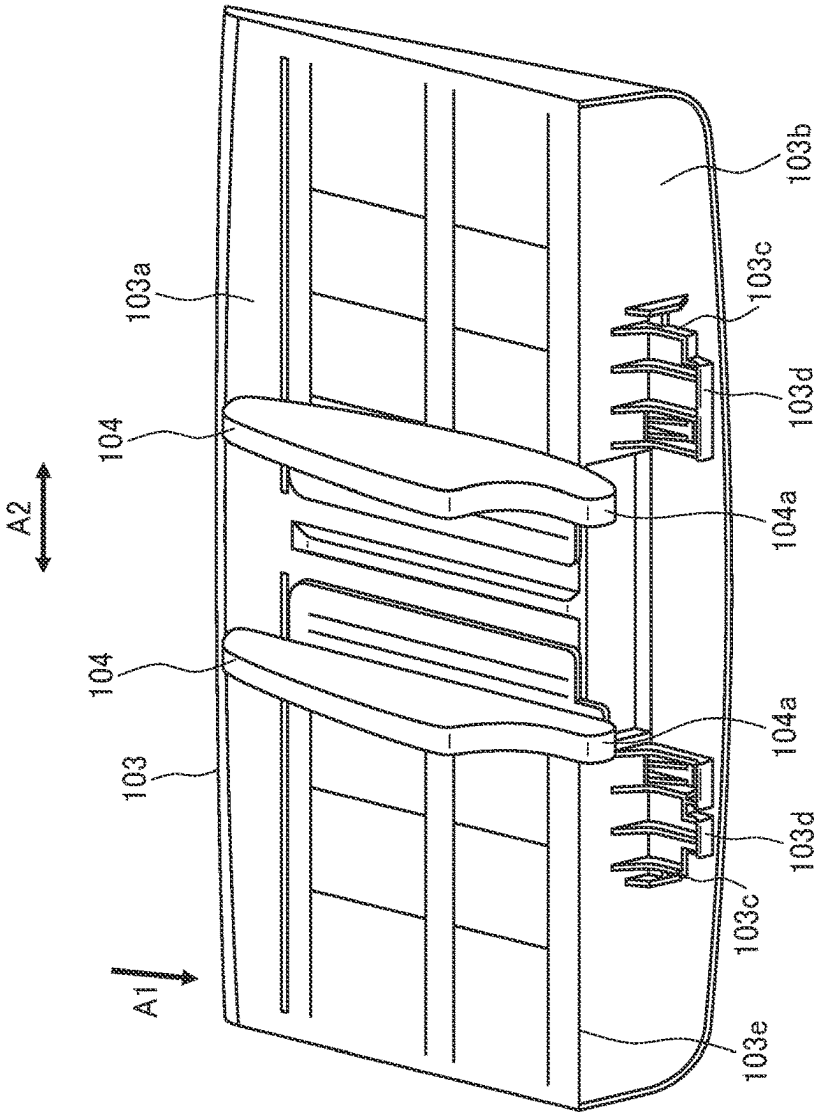
A2
A1
103
104
104
103a
103b
103c
103d
104a
104a
103d
103c
103e

FIG. 3A

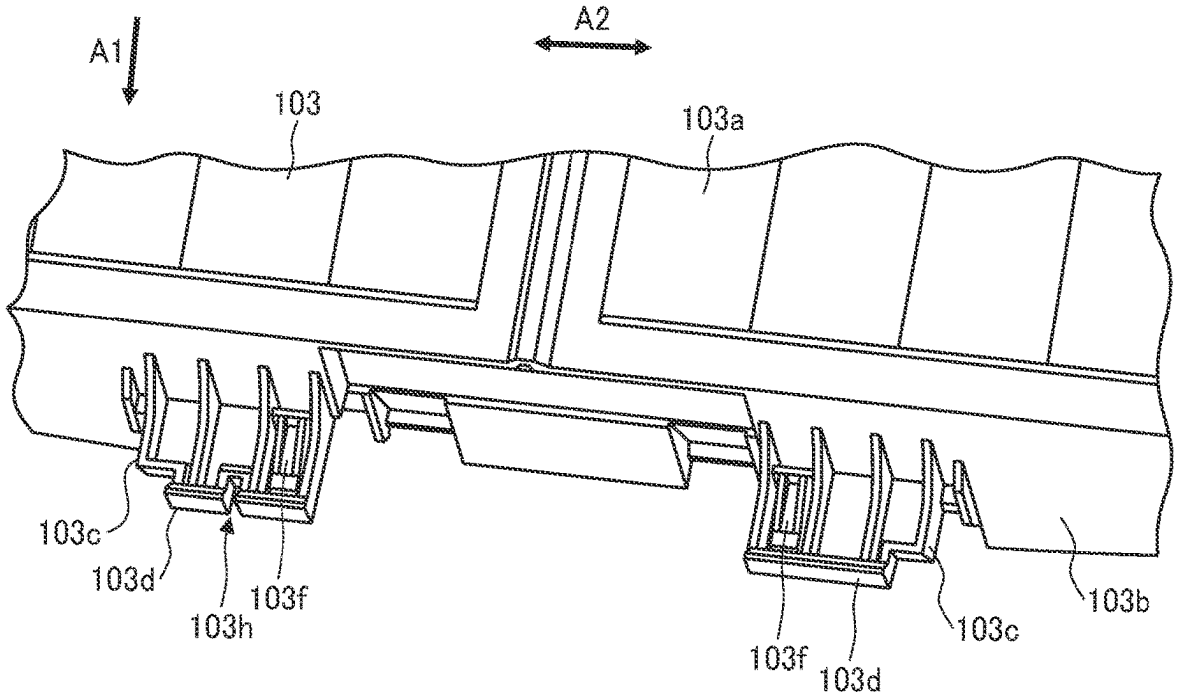
A1
A2
103
103a
103c
103d
103h
103f
103f
103d
103c
103b

FIG. 3B

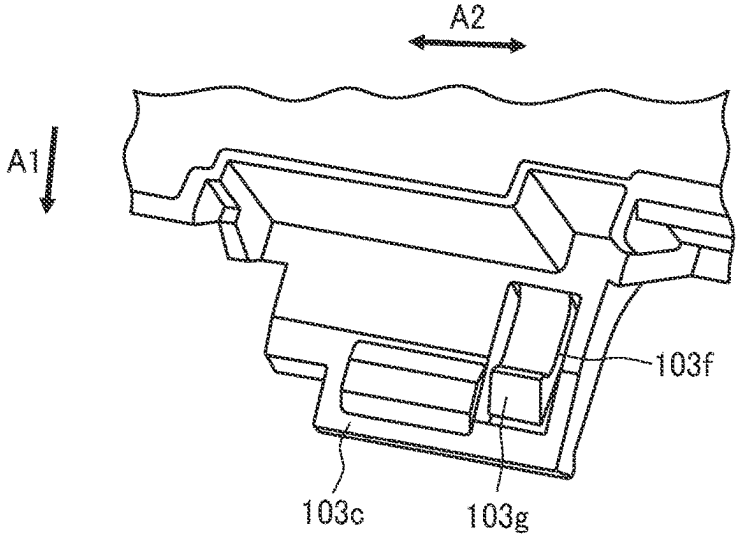
A2
A1
103f
103c
103g

FIG. 4

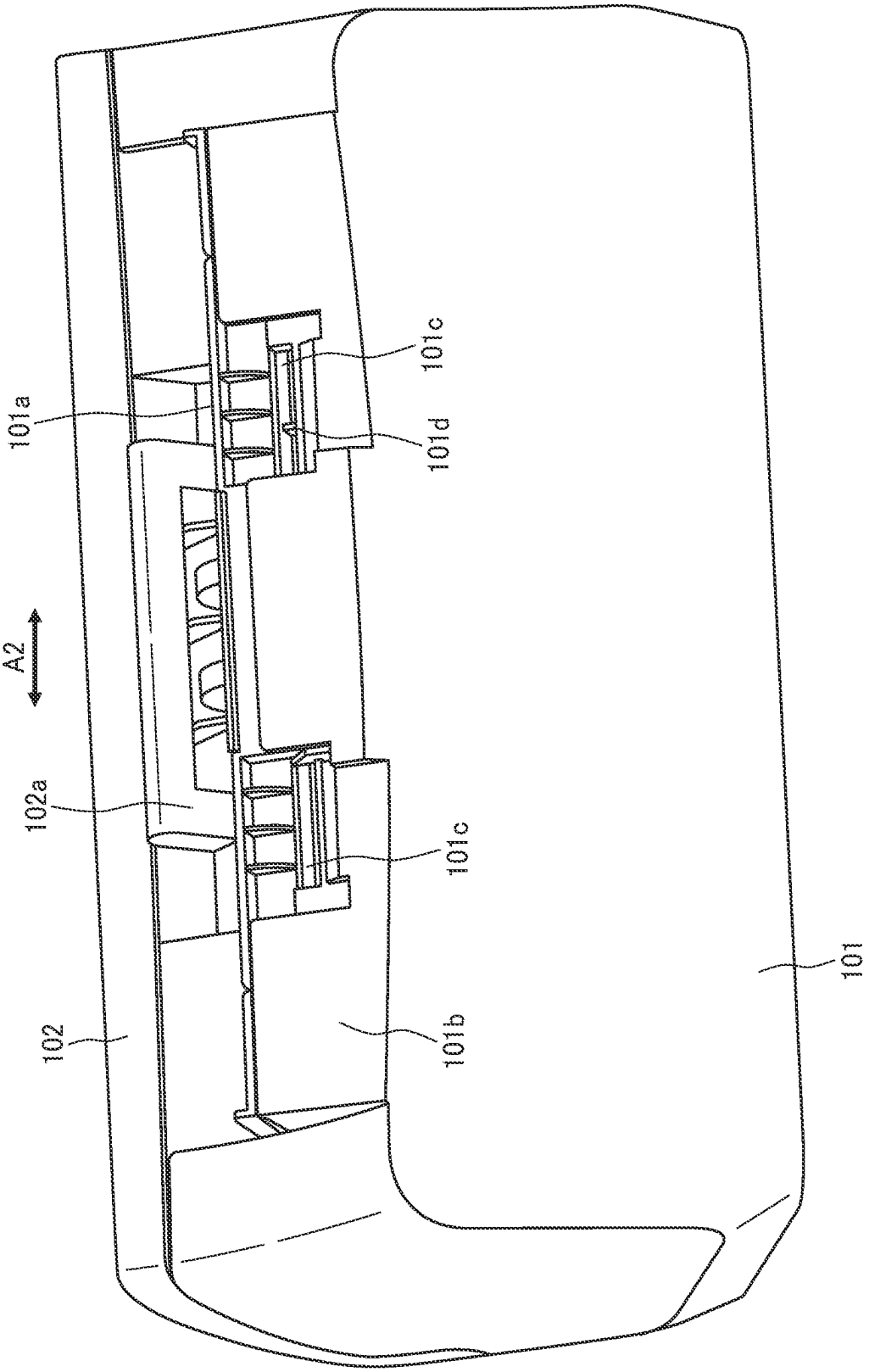

FIG. 5

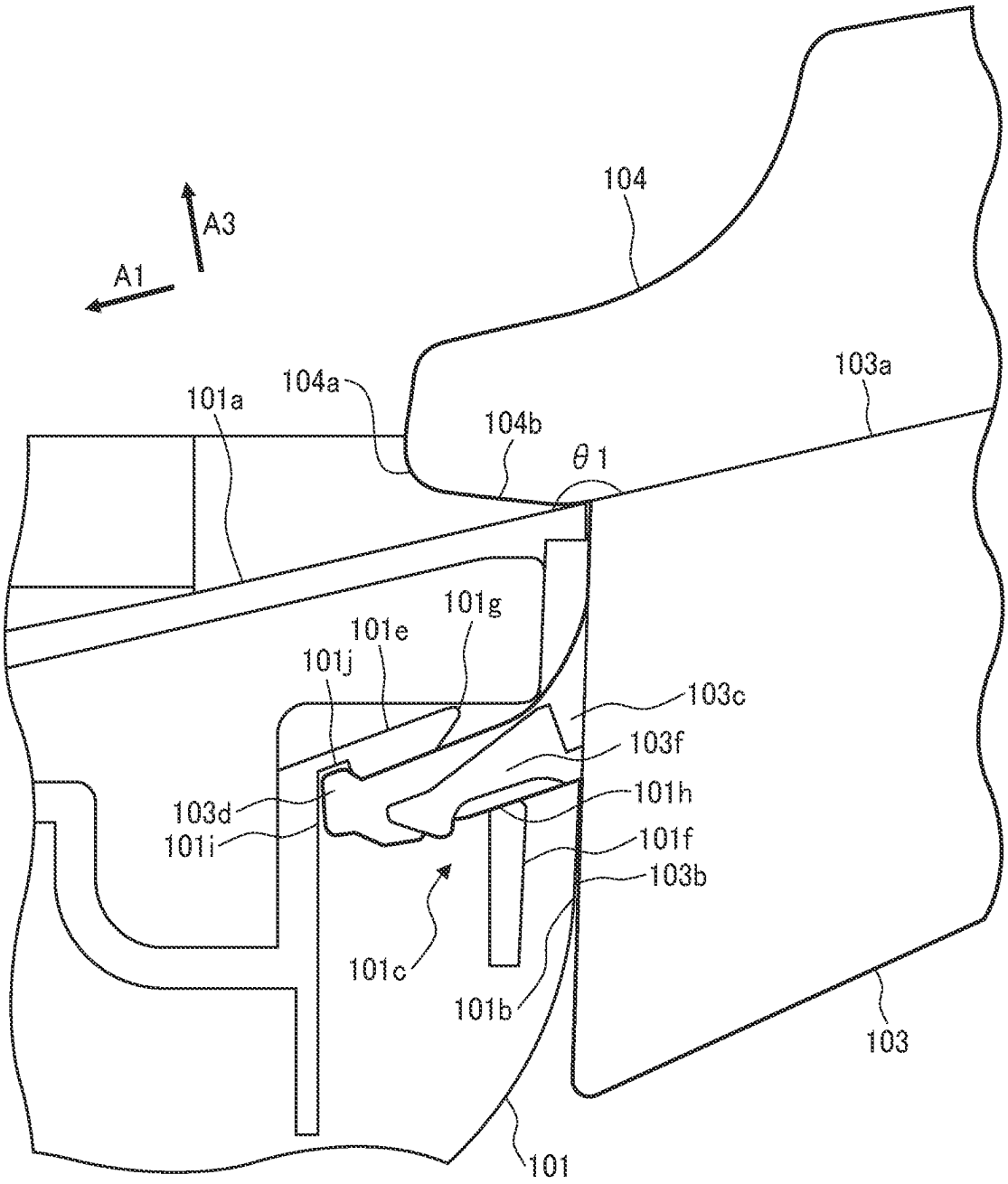
A3
A1
104
104a
101a
104b
θ1
103a
101g
101e
101j
103c
103f
103d
101h
101i
101f
103b
101c
101b
103
101

FIG. 6

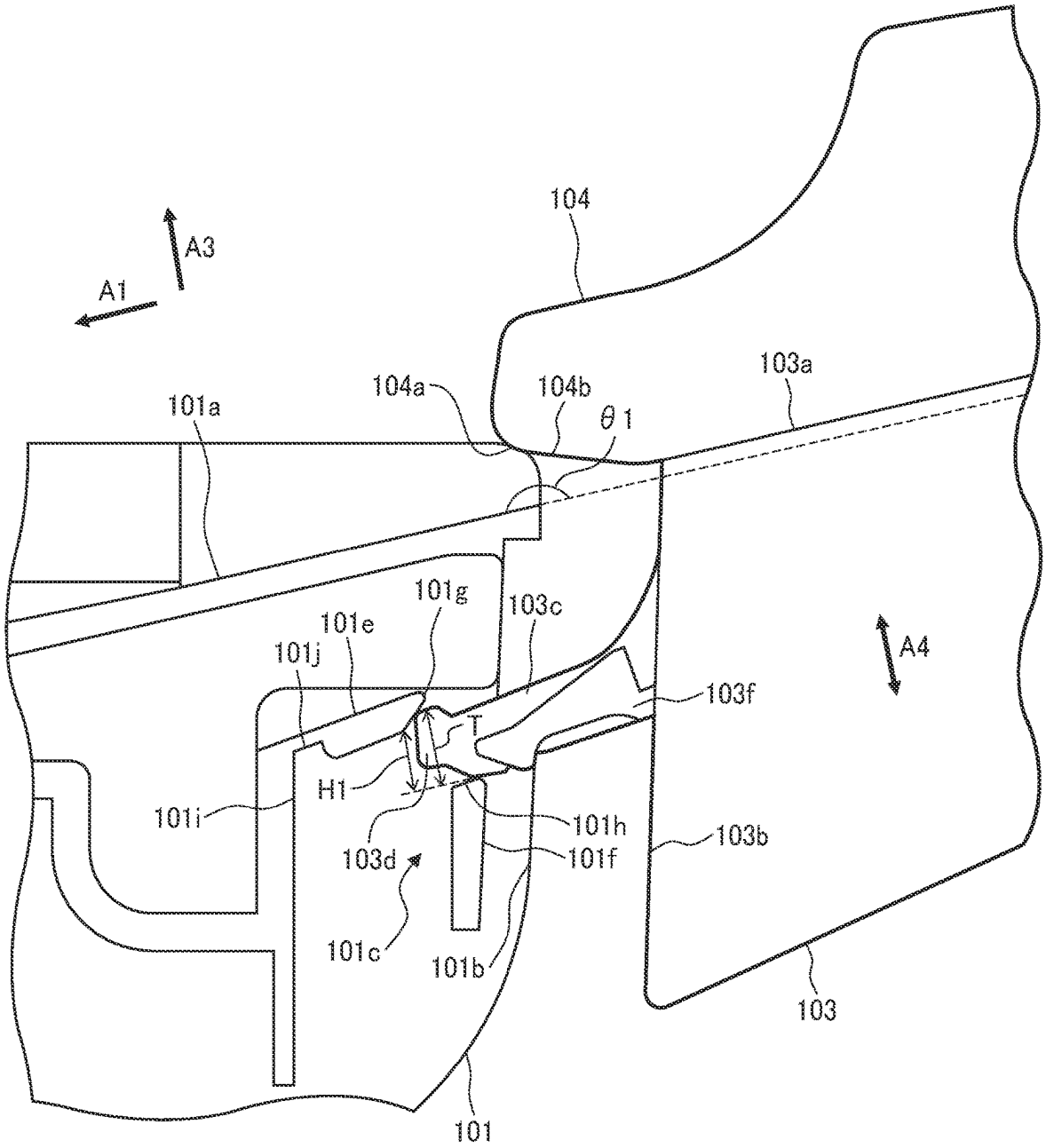
104
A3
A1
104a
104b
θ1
103a
101a
101g
103c
101e
101j
A4
103f
T
H1
101i
101h
103b
103d
101f
101c
101b
103
101

FIG. 7

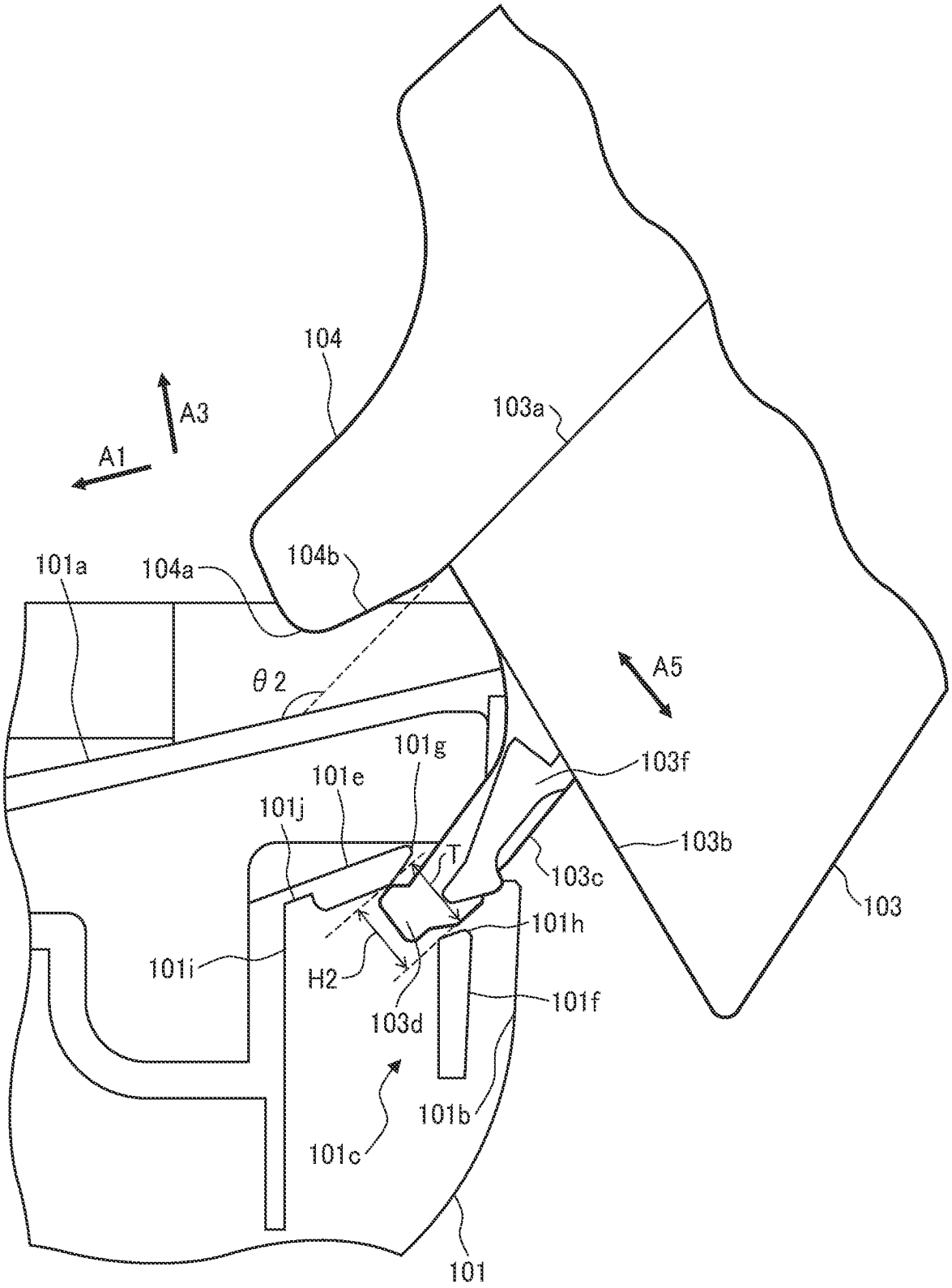
104
A3
A1
103a
101a
104a
104b
θ2
A5
101g
103f
101e
101j
103b
T
103c
103
101h
101i
H2
101f
103d
101b
101c
101

FIG. 8

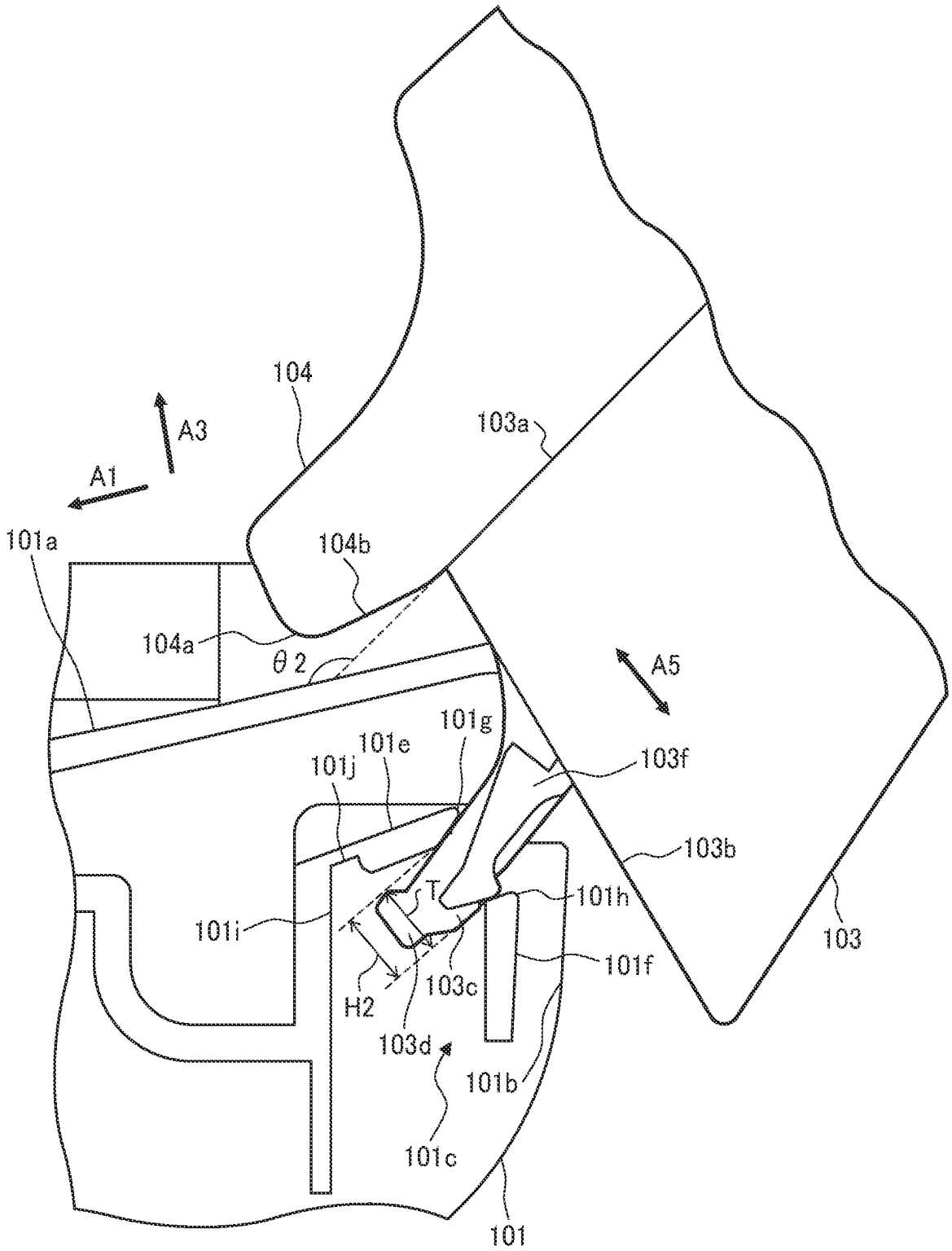
104
A3
A1
103a
101a
104b
104a
θ2
A5
101g
101e
101j
103f
103b
T
101h
101i
103
101f
H2
103c
103d
101b
101c
101

FIG. 9

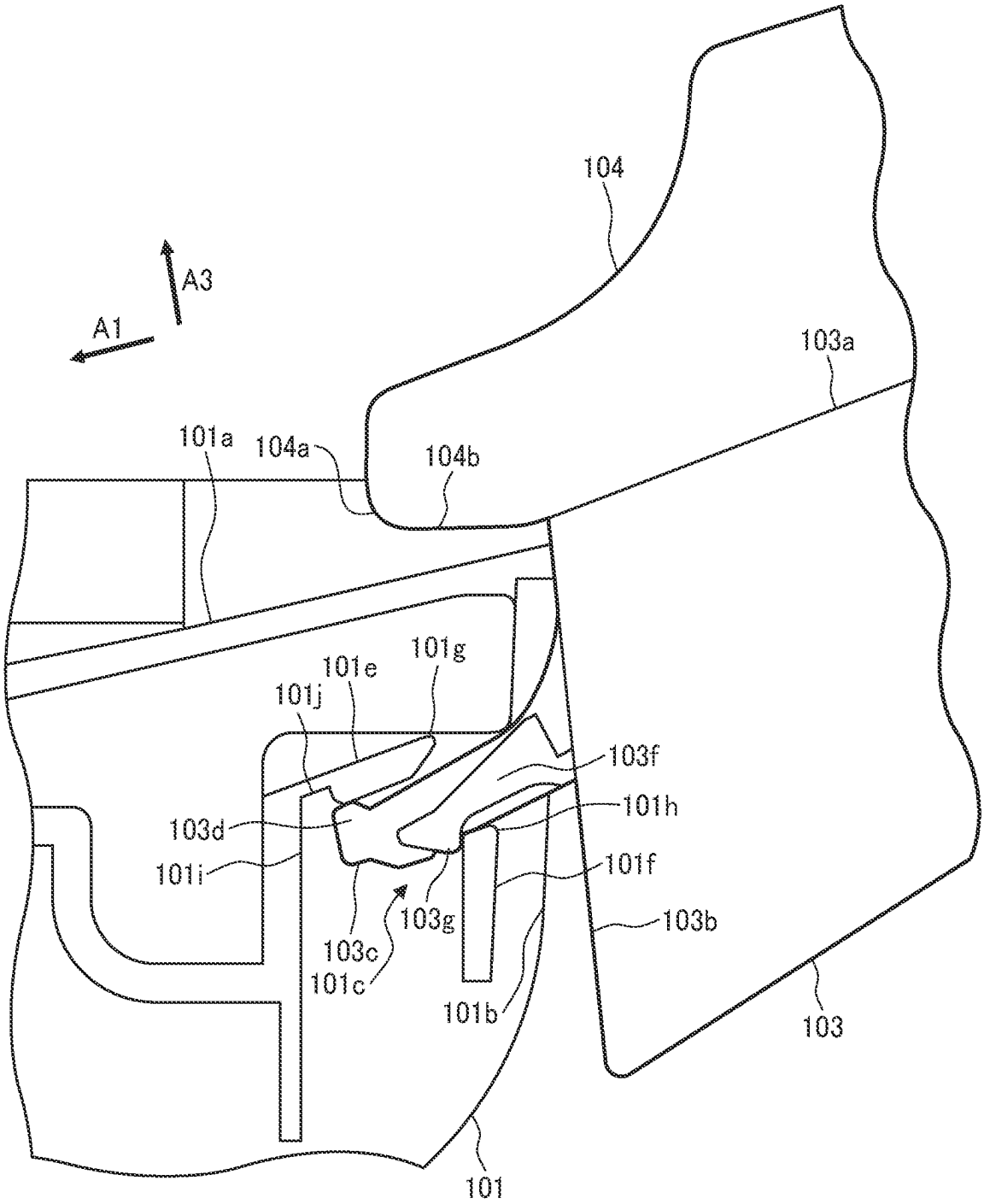
104
A3
A1
103a
101a
104a
104b
101g
101e
101j
103f
101h
103d
101i
101f
103g
103b
103c
101c
101b
103
101

FIG. 10

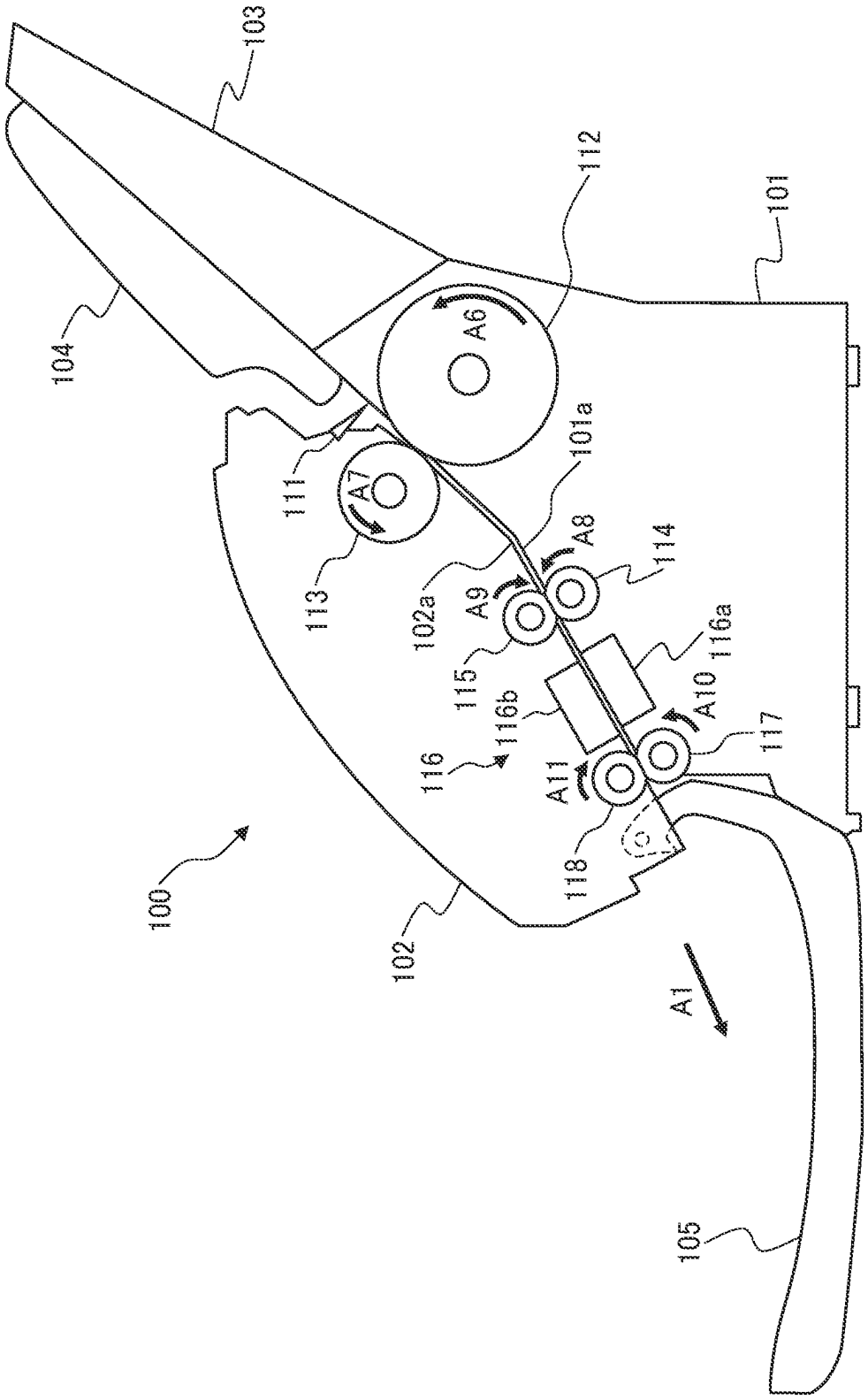
100
101
101a
102
102a
103
104
105
111
112
113
114
115
116
116a
116b
117
118
A1
A6
A7
A8
A9
A10
A11

FIG. 11

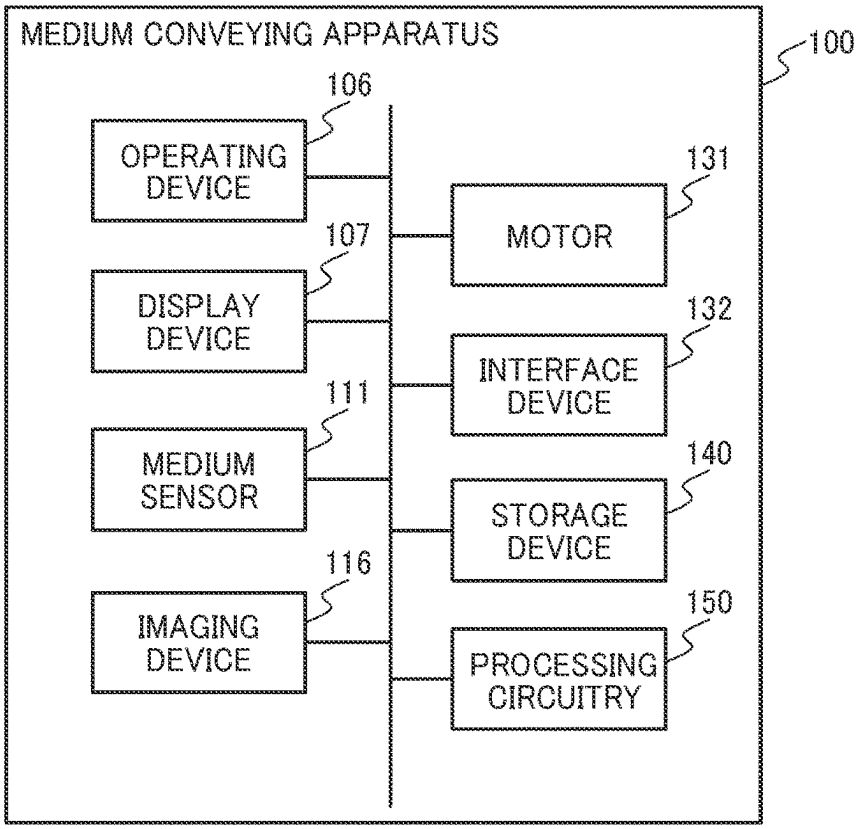
MEDIUM CONVEYING APPARATUS
100
106
OPERATING DEVICE
107
DISPLAY DEVICE
111
MEDIUM SENSOR
116
IMAGING DEVICE
131
MOTOR
132
INTERFACE DEVICE
140
STORAGE DEVICE
150
PROCESSING CIRCUITRY

FIG. 12

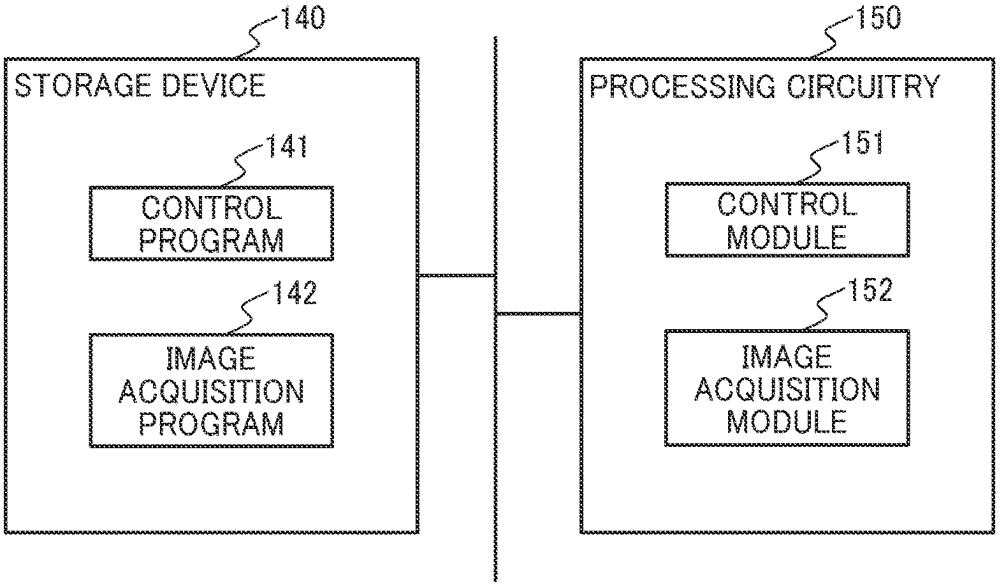
140
STORAGE DEVICE
141
CONTROL PROGRAM
142
IMAGE ACQUISITION PROGRAM
150
PROCESSING CIRCUITRY
151
CONTROL MODULE
152
IMAGE ACQUISITION MODULE

FIG. 13

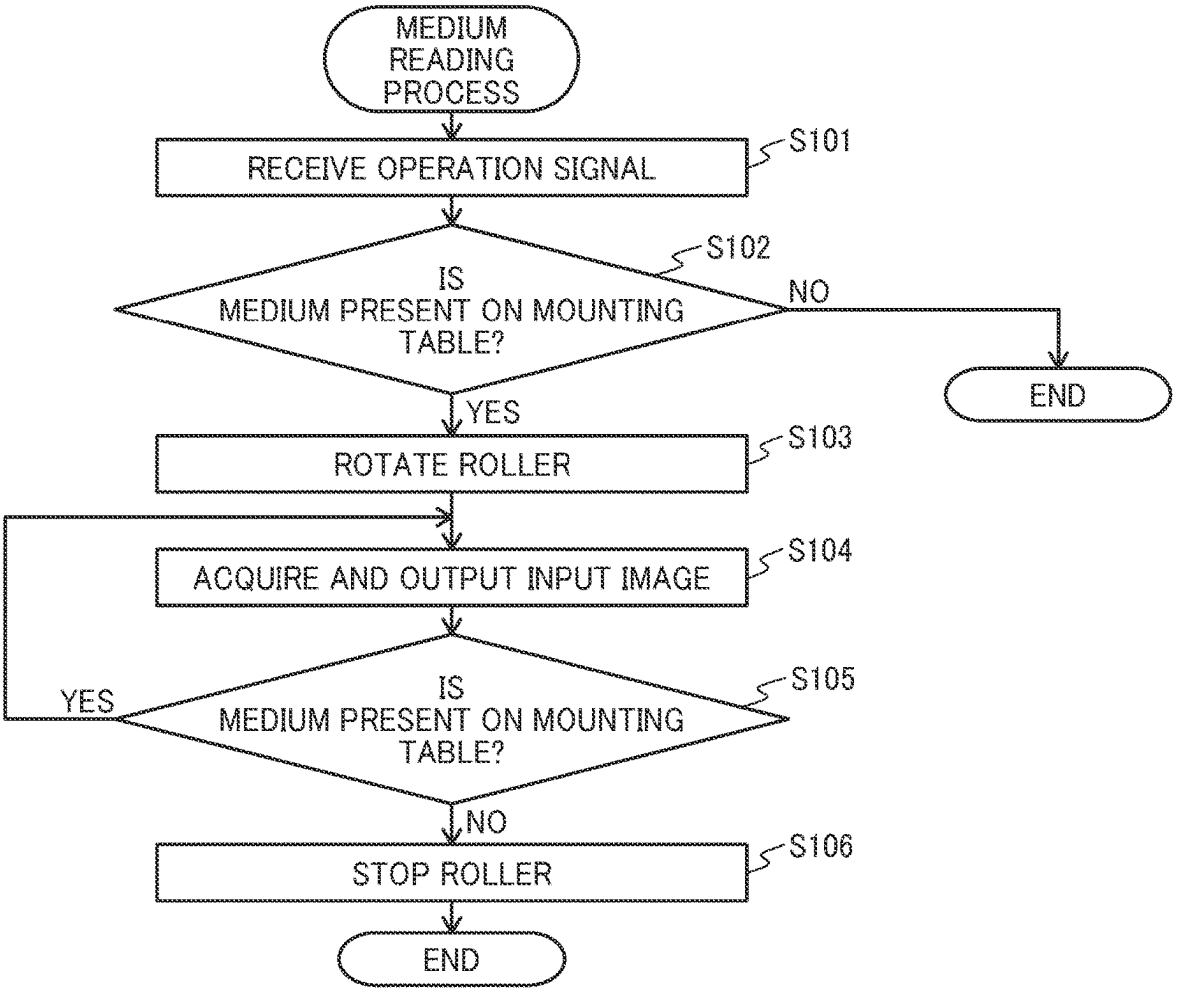
MEDIUM READING PROCESS
RECEIVE OPERATION SIGNAL
S101
IS MEDIUM PRESENT ON MOUNTING TABLE?
S102
NO
END
YES
ROTATE ROLLER
S103
ACQUIRE AND OUTPUT INPUT IMAGE
S104
IS MEDIUM PRESENT ON MOUNTING TABLE?
S105
YES
NO
STOP ROLLER
S106
END

FIG. 14

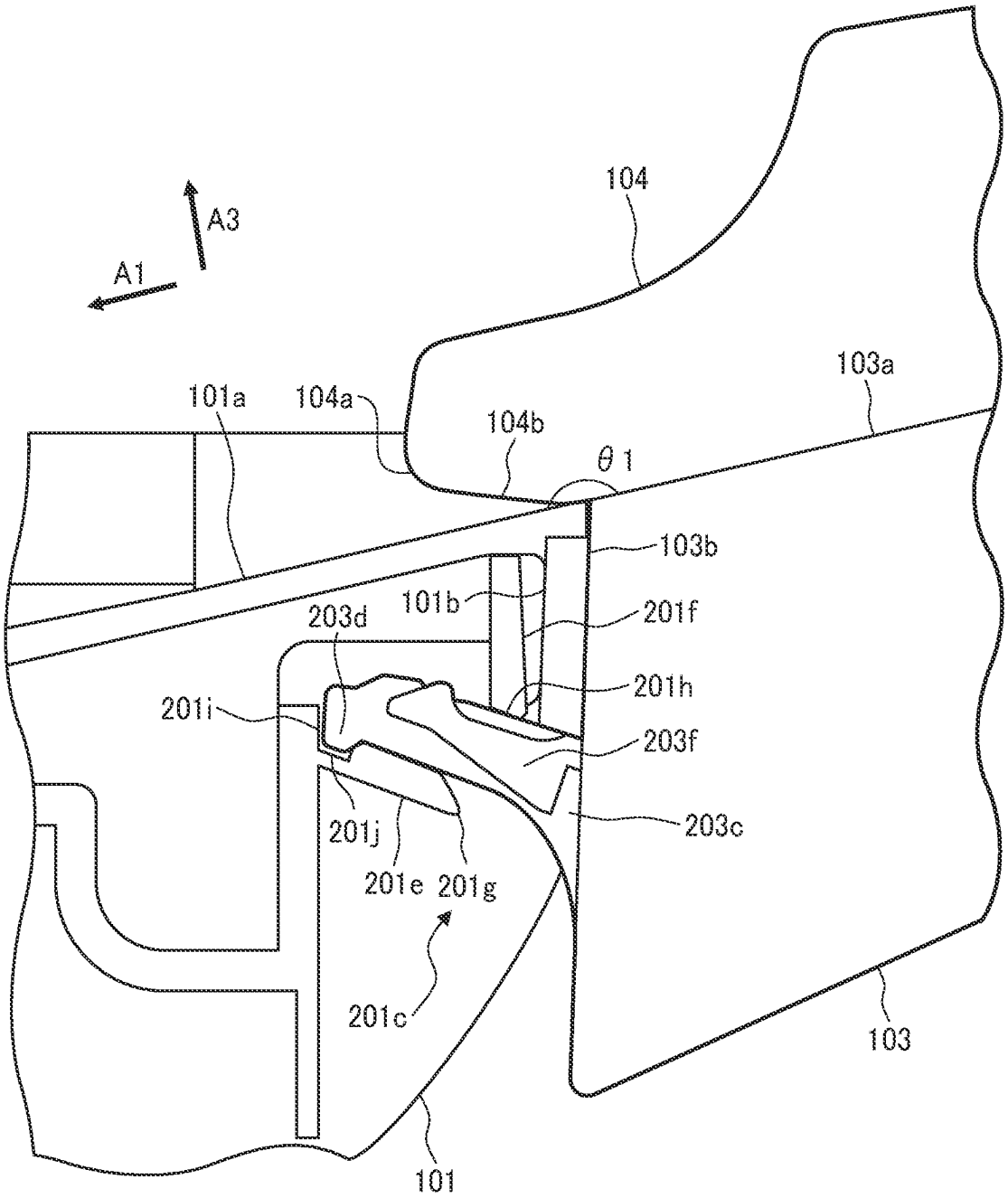
A3
A1
104
103a
101a
104a
104b
θ1
103b
101b
201f
203d
201h
201i
203f
201j
203c
201e
201g
201c
103
101

FIG. 15

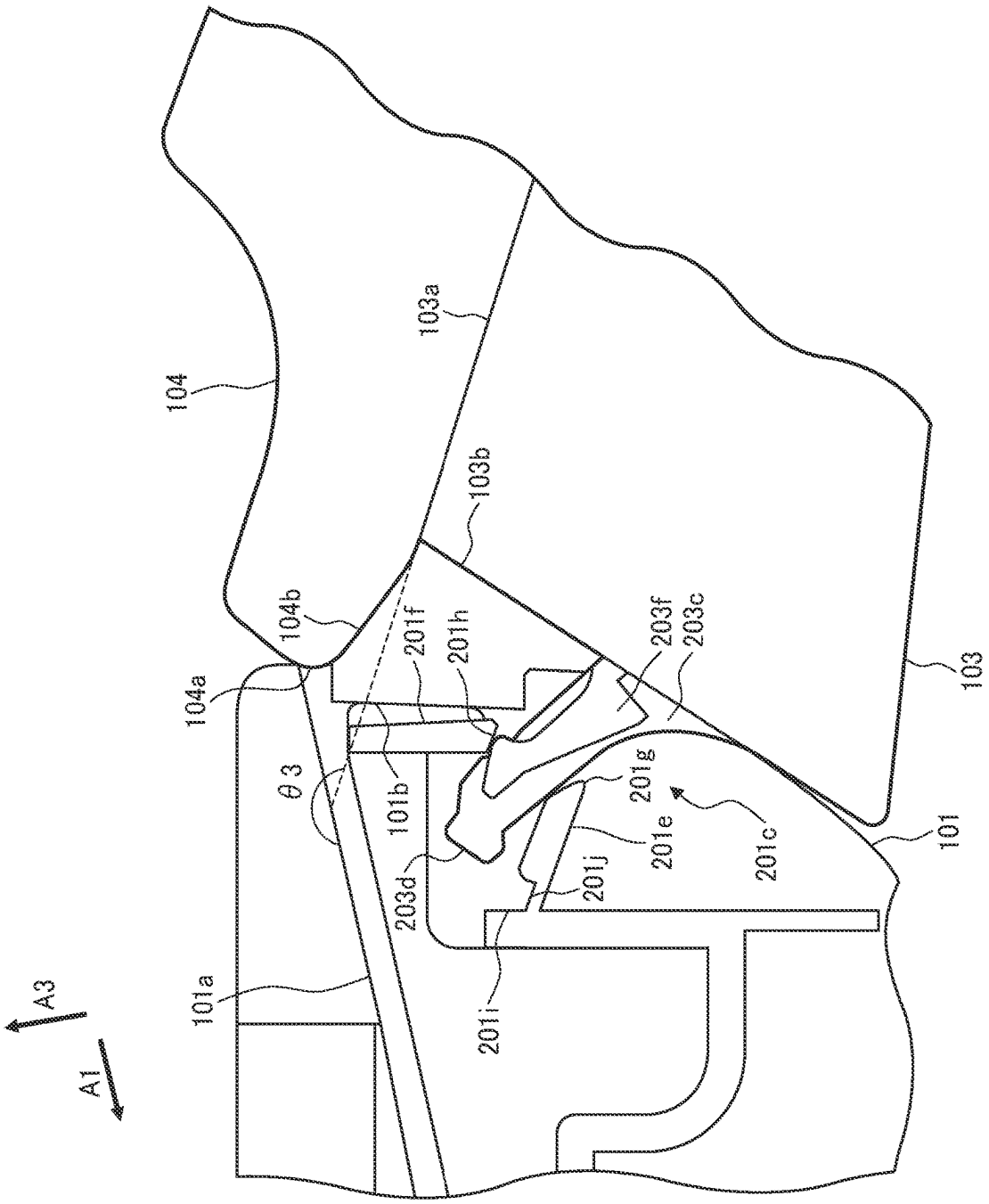
104
103a
103b
104b
104a
201f
201h
203f
203c
103
θ3
101b
201g
201e
201c
101
203d
201j
101a
201i
A3
A1

FIG. 16

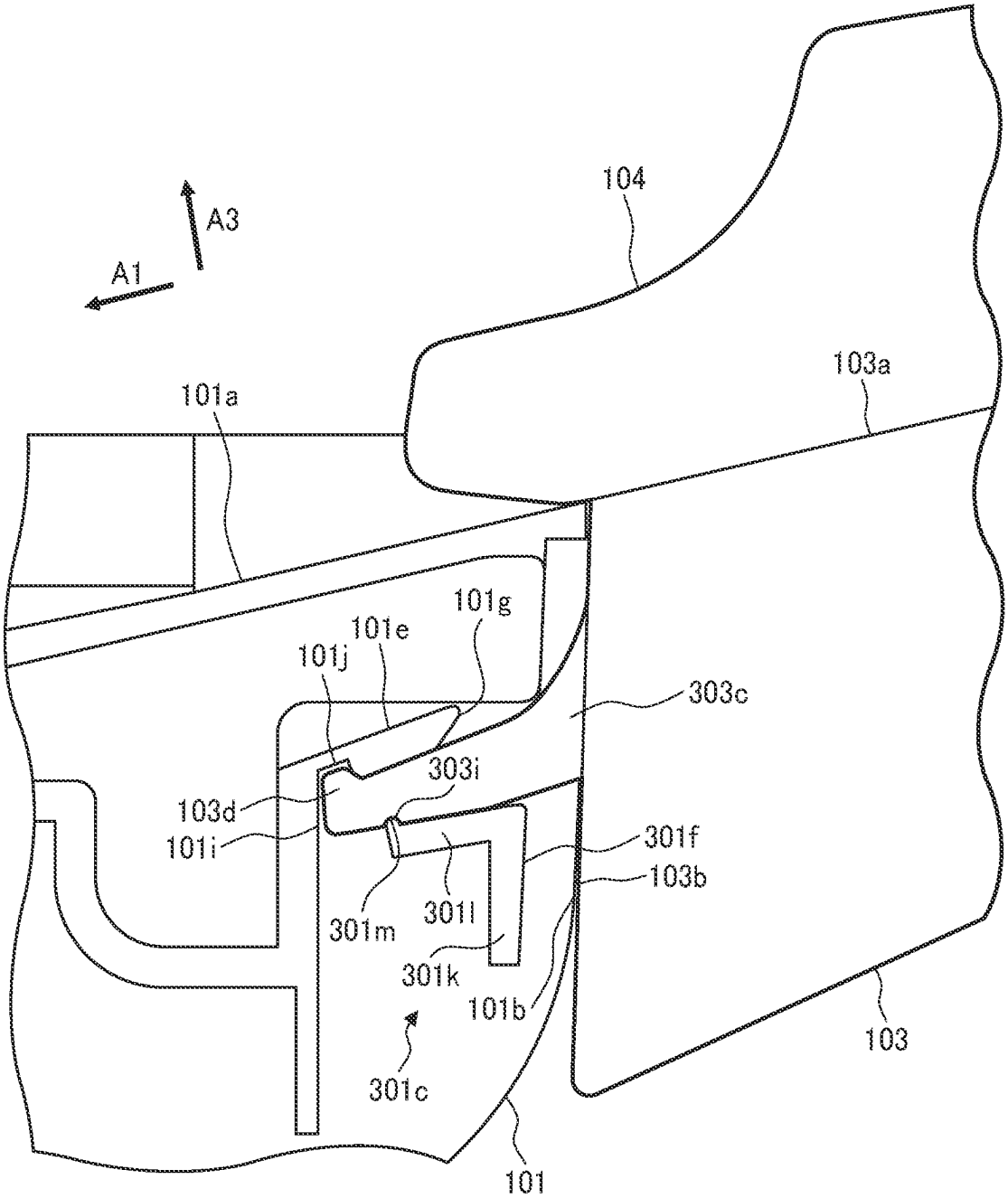
A3
A1
104
103a
101a
101g
101e
101j
303c
303i
103d
101i
301f
103b
301m
301l
301k
101b
103
301c
101

FIG. 17

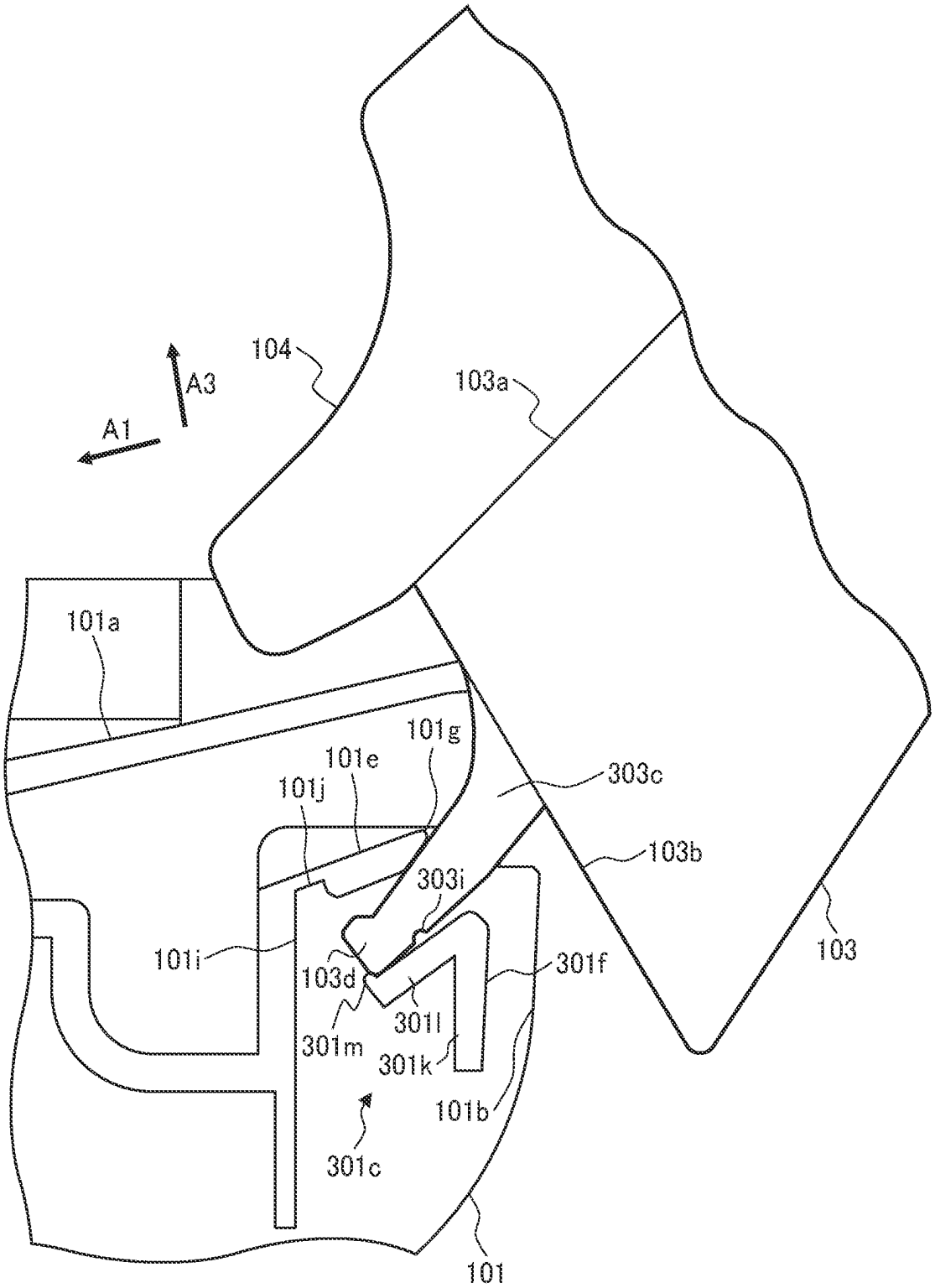
104
A3
A1
103a
101a
101g
101e
101j
303c
103b
303i
101i
103d
301f
103
301l
301m
301k
101b
301c
101

FIG. 18

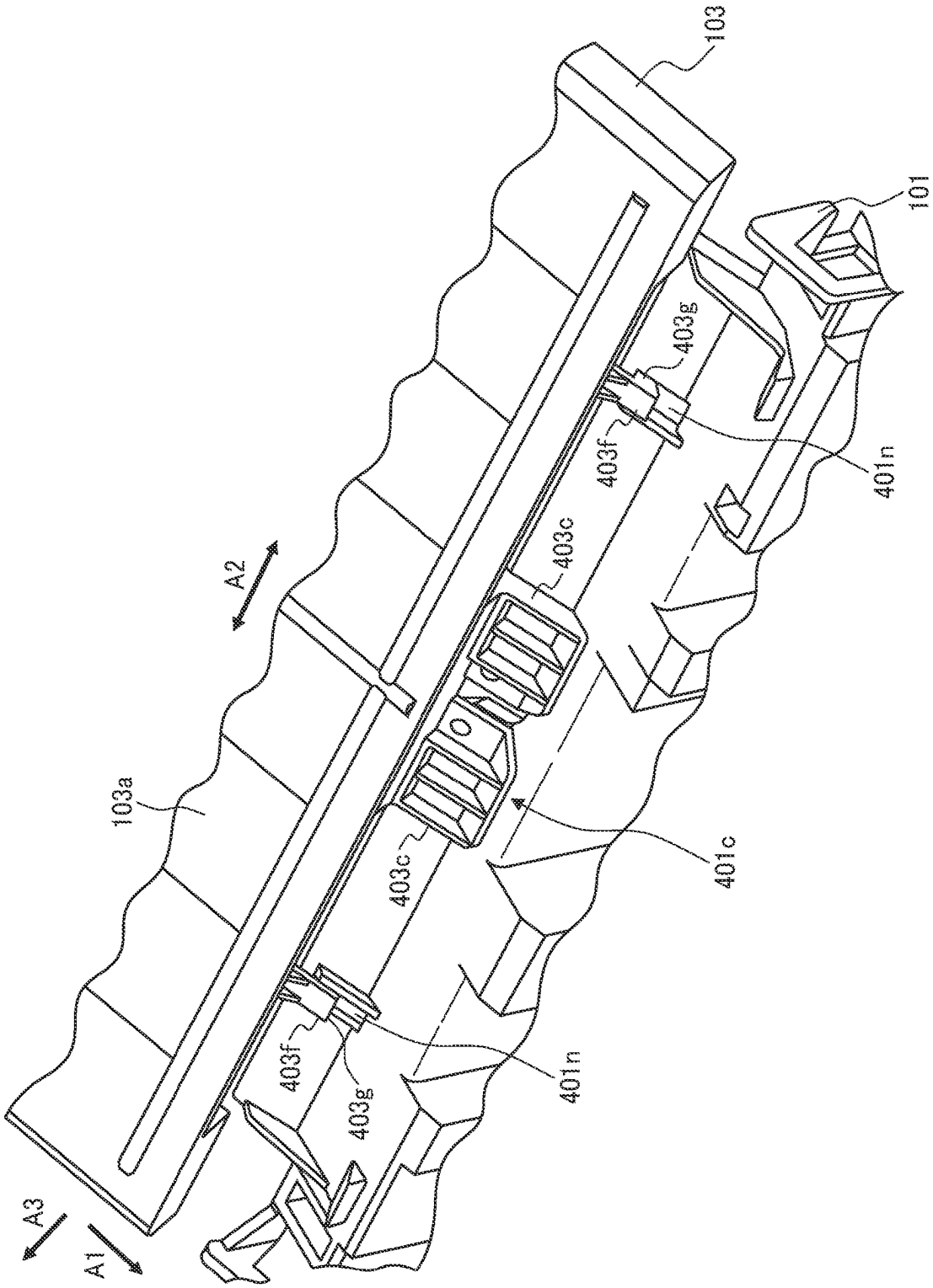
103
101
403g
403f
401n
403c
A2
103a
403c
401c
403f
403g
401n
A3
A1

FIG. 19

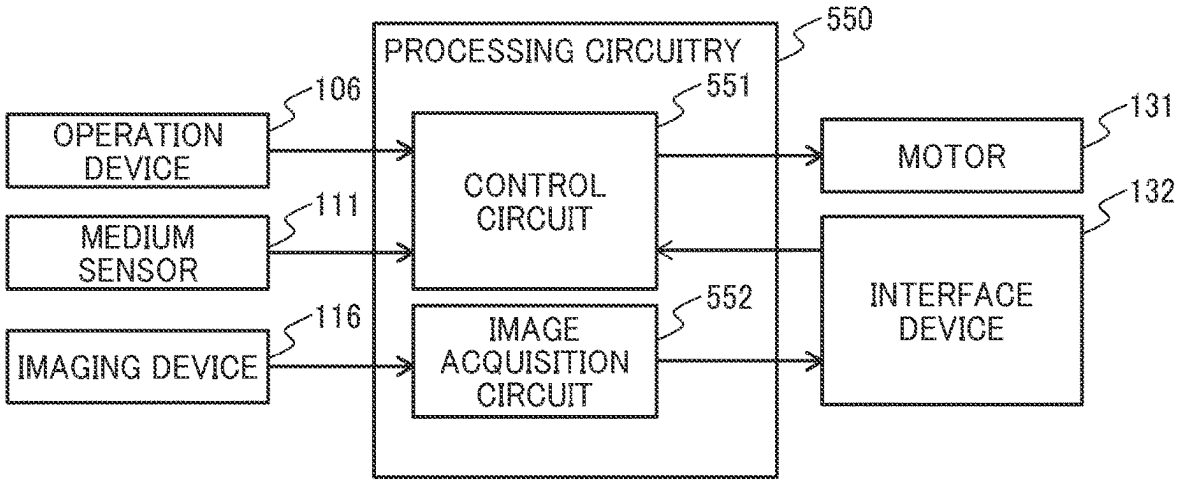
PROCESSING CIRCUITRY
550
106
OPERATION DEVICE
111
MEDIUM SENSOR
116
IMAGING DEVICE
551
CONTROL CIRCUIT
552
IMAGE ACQUISITION CIRCUIT
131
MOTOR
132
INTERFACE DEVICE

MEDIUM CONVEYING APPARATUS

CROSS-REFERENCE TO RELATED APPLICATION

This patent application is a continuation application of International Application No. PCT/JP2021/034164, having an international filing date of Sep. 16, 2021, the entire disclosure of which is hereby incorporated by reference herein.

BACKGROUND

Technical Field

Embodiments of the present disclosure relate to a medium conveying apparatus, and more specifically to a medium conveying apparatus including a placement tray.

Related Art

In a medium conveying apparatus such as a scanner that captures an image while conveying a medium, a placement tray on which media are placed may be detachable from a housing in order to allow the medium conveying apparatus to be stored compactly on a shelf, or the like, while not in use.

There has been proposed a document feed table formed of a plate material that includes a document holding portion that holds a document and an insertion portion that is inserted into an engagement member provided on a device main body to engage the document holding portion with the device main body. In this document feed table, a cutout portion is provided between the document holding portion and the insertion portion to make the insertion portion flexible.

There has been proposed a medium feed device including a medium placement portion that is attachable to or detachable from a device main body and includes a placement surface for placing the media to be fed and a pair of edge guides provided on the medium placement portion and including guide surfaces for guiding the side edges in the width direction. In this medium feed device, the edge guide includes a protruding portion where at least part of the guide surface protrudes downstream in the feeding direction with respect to the medium placement portion.

SUMMARY

According to an embodiment of the present disclosure, a medium conveying apparatus includes a housing, a placement tray, and a side guide. The housing has an engaged portion and a guide surface for media. The placement tray is attachable to and detachable from the housing, and has an engaging portion engageable with the engaged portion and a placement surface for media. The placement tray forms a first angle with the guide surface when fixed to the housing. The side guide is mounted on the placement surface and protrudes downstream beyond the placement tray in a medium conveying direction to restrict a medium in a width direction perpendicular to the medium conveying direction. The engaged portion is configured to restrict entry or removal of the engaging portion when the placement surface forms the first angle with the guide surface in attachment of the placement tray to the housing or detachment of the placement tray from the housing, and allow entry or removal of the engaging portion when the placement surface forms a second angle different from the first angle with the guide surface in attachment of the placement tray to the housing or detachment of the placement tray from the housing. A downstream end of the side guide in the medium conveying direction does not intersect with the guide surface as viewed from the width direction when the placement surface forms the second angle with the guide surface in attachment of the placement tray to the housing or detachment of the placement tray from the housing.

BRIEF DESCRIPTION OF THE DRAWINGS

A more complete appreciation of embodiments of the present disclosure and many of the attendant advantages and features thereof can be readily obtained and understood from the following detailed description with reference to the accompanying drawings, wherein:

FIG. **1** is a perspective view of a medium conveying apparatus according to an embodiment of the present disclosure;

FIGS. **2**A and **2**B are schematic views of a placement tray according to an embodiment of the present disclosure;

FIGS. **3**A and **3**B are schematic views of an engaging portion according to an embodiment of the present disclosure;

FIG. **4** is a schematic view of a lower housing according to an embodiment of the present disclosure;

FIG. **5** is a schematic view of the engaging portion and an engaged portion according to an embodiment of the present disclosure;

FIG. **6** is a schematic view of the engaging portion and the engaged portion illustrated in FIG. **5**;

FIG. **7** is a schematic view of the engaging portion and the engaged portion illustrated in FIG. **5**;

FIG. **8** is a schematic view of the engaging portion and the engaged portion illustrated in FIG. **5**;

FIG. **9** is a schematic view of the engaging portion and the engaged portion illustrated in FIG. **5**;

FIG. **10** is a schematic view of a conveyance path inside the medium conveying apparatus illustrated in FIG. **1**;

FIG. **11** is a block diagram illustrating a schematic configuration of the medium conveying apparatus illustrated in FIG. **1**;

FIG. **12** is a diagram illustrating a schematic configuration of a storage device and processing circuitry illustrated in FIG. **11**;

FIG. **13** is a flowchart of an operation of a medium reading process according to an embodiment of the present disclosure;

FIG. **14** is a schematic view of an engaged portion according to another embodiment of the present disclosure;

FIG. **15** is a schematic view of the engaged portion illustrated in FIG. **14**;

FIG. **16** is a schematic view of an engaged portion according to still another embodiment of the present disclosure;

FIG. **17** is a schematic view of the engaged portion illustrated in FIG. **16**;

FIG. **18** is a schematic view of an engaged portion according to yet another embodiment of the present disclosure; and

FIG. **19** illustrates a schematic configuration of processing circuitry according to another embodiment of the present disclosure.

The accompanying drawings are intended to depict embodiments of the present disclosure and should not be interpreted to limit the scope thereof. The accompanying

drawings are not to be considered as drawn to scale unless explicitly noted. Also, identical or similar reference numerals designate identical or similar components throughout the several views.

DETAILED DESCRIPTION

In describing embodiments illustrated in the drawings, specific terminology is employed for the sake of clarity. However, the disclosure of this specification is not intended to be limited to the specific terminology so selected and it is to be understood that each specific element includes all technical equivalents that have a similar function, operate in a similar manner, and achieve a similar result.

Referring now to the drawings, embodiments of the present disclosure are described below. As used herein, the singular forms "a," "an," and "the" are intended to include the plural forms as well, unless the context clearly indicates otherwise.

A medium conveying apparatus, a control method, and a non-transitory recording medium according to an aspect of the present disclosure will be described below with reference to the drawings. It is noted that the technical scope of the present embodiment is not limited to the embodiments thereof, but also includes the invention set forth in the scope of claims and its equivalents.

FIG. **1** is a perspective view of a medium conveying apparatus **100** configured as an image scanner. The medium conveying apparatus **100** conveys a medium, which is a document, and captures an image. The medium may be a sheet of paper, a thin sheet of paper, a cardboard, a card, a copier paper sheet, an envelope, etc. The medium conveying apparatus **100** may be a facsimile machine, a copier, a printer multifunction peripheral (MFP), etc. The medium to be conveyed may be an object to be printed, etc., instead of a document, and the medium conveying apparatus **100** may be a printer or the like. In FIG. **1**, arrow A1 indicates a medium conveying direction, arrow A2 indicates a width direction perpendicular to the medium conveying direction, and arrow A3 indicates a height direction perpendicular to the medium conveying direction A1 and the width direction A2. In the following description, the term "upstream" refers to the upstream in the medium conveying direction A1, and the term "downstream" refers to the downstream in the medium conveying direction A1.

The medium conveying apparatus **100** includes a lower housing **101**, an upper housing **102**, a placement tray **103**, side guides **104**, a discharge tray **105**, an operating device **106**, and a display device **107**.

The lower housing **101** is an example of a housing. The lower housing **101** and the upper housing **102** include a resin material such as polystyrene (PS) or acrylonitrile butadiene styrene (ABS). The upper housing **102** is positioned to cover an upper surface of the medium conveying apparatus **100** and is engaged with the lower housing **101** with a hinge so as to be opened and closed when a medium is jammed, when the inside of the medium conveying apparatus **100** is cleaned, etc.

The placement tray **103** is engaged with the lower housing **101** such that the placement tray **103** is inclined with respect to the horizontal direction. The placement tray **103** may be arranged substantially parallel with respect to the horizontal direction. The placement tray **103** includes a resin material such as PS or ABS. The placement tray **103** includes a placement surface **103***a* for media, on which the media to be fed and conveyed are placed. The placement tray **103** is attachable to or detachable from the lower housing **101**. The side guides **104** are mounted on the placement surface **103***a* of the placement tray **103** to be movable in the width direction A2 perpendicular to the medium conveying direction. The side guides **104** are positioned to match the width of the medium placed on the placement tray **103** and restricts the medium in the width direction. In the example illustrated in FIG. **1**, the two side guides **104** are spaced side by side in the width direction A2. The number of the side guides **104** may be one.

The discharge tray **105** is engaged with the upper housing **102** to place the discharged media. The discharge tray **105** may be engaged with the lower housing **101**.

The operating device **106** includes an input device such as a button and an interface circuit that acquires signals from the input device, accepts user's input operations, and outputs operation signals corresponding to user's input operations. The display device **107** includes a display including a liquid crystal display, an organic electro-luminescence (EL) display, etc., and an interface circuit that outputs image data to the display, and displays image data on the display.

FIGS. **2**A and **2**B are schematic views illustrating the placement tray **103**. FIG. **2**A is a perspective view of the placement tray **103** detached from the lower housing **101** when viewed from above, and FIG. **2**B is a side view of the placement tray **103** detached from the lower housing **101** when viewed from the lateral side.

As illustrated in FIGS. **2**A and **2**B, a downstream surface **103***b* of the placement tray **103** opposed to the lower housing **101** includes an engaging portion **103***c* that is engageable with an engaged portion, which is described below, of the lower housing **101**. In the example illustrated in FIG. **2**A, the two engaging portions **103***c* are spaced side by side in the width direction A2. The number of the engaging portions **103***c* may be one or may be three or more.

The side guide **104** is provided to protrude downstream beyond the placement tray **103** in the medium conveying direction A1. As the side guide **104** protrudes downstream, the medium conveying apparatus **100** may prevent tilt of the medium being conveyed and may prevent the occurrence of skew of the medium. A downstream end **103***d* of the engaging portion **103***c* is located further downstream than a downstream end **104***a* of the side guide **104**. In particular, the engaging portion **103***c* is provided such that the length by which the engaging portion **103***c* protrudes downstream beyond a downstream end **103***e* of the placement surface **103***a* is longer than the length by which the downstream end **104***a* of the side guide **104** protrudes downstream beyond the downstream end **103***e* of the placement surface **103***a*. The engaging portion **103***c* is formed such that the downstream end **103***d* of the engaging portion **103***c* is located at a position sufficiently away from the downstream end **103***e* of the placement surface **103***a* (e.g., a position away by 5 mm or more, more preferably 15 mm or more). The downstream end **103***d* of the engaging portion **103***c* is formed to protrude upward, i.e., toward the placement surface **103***a*.

A lower surface **104***b* of a protruding portion of the side guide **104** is inclined with respect to an extended surface of the placement surface **103***a* of the placement tray **103**. The lower surface **104***b* of the protruding portion of the side guide **104** is provided to be located higher, i.e., the further downstream position is the further away from the extended surface of the placement surface **103***a*. The angle formed between the lower surface **104***b* of the protruding portion of the side guide **104** and the placement surface **103***a* is set to, for example, an angle more than 0° and 30° or less.

FIGS. **3**A and **3**B are schematic views of the engaging portion **103***c*. FIG. **3**A is an enlarged view of an area around

the engaging portion **103***c* in FIG. **2**A, and FIG. **3**B is a perspective view of the engaging portion **103***c* when viewed from below.

As illustrated in FIGS. **3**A and **3**B, an elastic claw portion **103***f* is provided inside the engaging portion **103***c*. The claw portion **103***f* has an upstream end disposed on a downstream surface of the placement tray **103** and is swingable with the upstream end as a swing axis. As illustrated in FIG. **3**B, a lower surface **103***g* of the claw portion **103***f* is formed to protrude downward, i.e., toward the opposite side of the placement surface **103***a*. The engaging portion **103***c* and the claw portion **103***f* are formed integrally with the downstream surface of the placement tray **103** with a flexible material. The claw portion **103***f* swings upward when the lower surface **103***g* is pressed upward (toward the placement surface **103***a*).

The downstream end **103***d* of the engaging portion **103***c* includes a recessed portion **103***h* that is engageable with a projection portion, described below, provided in the lower housing **101**.

FIG. **4** is a schematic view of the lower housing **101** and the upper housing **102**. FIG. **4** is a perspective view of the lower housing **101** and the upper housing **102** with the placement tray **103** detached when viewed from the upstream side.

As illustrated in FIG. **4**, the lower housing **101** and the upper housing **102** include a lower guide surface **101***a* and an upper guide surface **102***a*, respectively, to guide the conveyed medium. The lower guide surface **101***a* is an example of a guide surface for media.

An upstream surface **101***b* of the lower housing **101** opposed to the placement tray **103** includes an engaged portion **101***c* that is engageable with the engaging portion **103***c* included in the placement tray **103**. The number of the engaged portions **101***c* is the same as the number of the engaging portions, and in the example illustrated in FIG. **4**, the two engaged portions **101***c*, which are engaged with the two engaging portions **103***c*, are spaced side by side in the width direction A2.

The engaged portion **101***c* includes a projection portion **101***d* that is engageable with the recessed portion **103***h* included in the engaging portion **103***c*. By engaging the projection portion **101***d* with the recessed portion **103***h*, the placement tray **103** is positioned with respect to the lower housing **101** in the width direction A2 perpendicular to the medium conveying direction. In the medium conveying apparatus **100**, it is possible to simplify the structure of the apparatus since the placement tray **103** can be positioned by using the engaging portion **103***c* and the engaged portion **101***c* for engaging the placement tray **103** to the lower housing **101** without using a special positioning member for positioning. The engaging portion **103***c* may include a projection portion, and the engaged portion **101***c* may include a recessed portion. In such a case, the projection portion included in the engaging portion **103***c* is engaged with the recessed portion included in the engaged portion **101***c* such that the placement tray **103** is positioned with respect to the lower housing **101** in the width direction A2 perpendicular to the medium conveying direction A1.

FIGS. **5** to **9** are schematic views illustrating the relationship between the engaging portion **103***c* and the engaged portion **101***c*. FIGS. **5** to **9** are cross-sectional views of an area around the engaging portion **103***c* and the engaged portion **101***c* when viewed from the side.

FIG. **5** illustrates a state where the placement tray **103** is attached and fixed to the lower housing **101**. In the following description, the position where the placement tray **103** is fixed to the lower housing **101** to place the medium, as illustrated in FIG. **5**, may be referred to as a fixed position.

As illustrated in FIG. **5**, the engaged portion **101***c* of the lower housing **101** includes a first engaged portion **101***e* and a second engaged portion **101***f*. The first engaged portion **101***e* is provided above the engaging portion **103***c*, which is located in the engaged portion **101***c*, to extend substantially parallel to the extending direction of the engaging portion **103***c*. A downstream end of the first engaged portion **101***e* includes a wall portion **101***i* and a recessed portion **101***j*. The second engaged portion **101***f* is provided below the engaging portion **103***c*, which is located in the engaged portion **101***c*, to extend substantially parallel to the height direction A3. The first engaged portion **101***e* and the second engaged portion **101***f* form an entrance for the engaging portion **103***c* into the engaged portion **101***c*. An upstream end big of the first engaged portion **101***e* is positioned downstream of and above an upper end **101***h* of the second engaged portion **101***f*, and therefore the entrance is formed to open upstream and upward.

When the downstream end **103***d* of the engaging portion **103***c* abuts the wall portion **101***i* provided within the engaged portion **101***c* and is fitted into the recessed portion **101***j*, an upper surface of the engaging portion **103***c* is in contact with the first engaged portion **101***e* and a lower surface of the engaging portion **103***c* is in contact with the second engaged portion **101***f*. Accordingly, the engaging portion **103***c* is engaged with the engaged portion **101***c*. When the engaging portion **103***c* is engaged with the engaged portion **101***c*, the downstream surface **103***b* of the placement tray **103** is in contact with the upstream surface **101***b* of the lower housing **101**. Accordingly, the placement tray **103** is supported by and fixed to the lower housing **101**.

The placement surface **103***a* of the placement tray **103** is positioned to form a first angle θ1 with the lower guide surface **101***a* of the lower housing **101** when the placement tray **103** is located in the fixed position and is fixed to the lower housing **101**. The first angle θ1 is for example 180°. That is, the placement surface **103***a* and the lower guide surface **101***a* are provided to be flush when the placement tray **103** is fixed to the lower housing **101**. This allows the medium conveying apparatus **100** to smoothly convey a medium along the placement surface **103***a* and the lower guide surface **101***a* and enhance the conveyance of media.

The first angle θ1 is not limited to 180°, but is set to an angle within the range where the media can be conveyed (e.g., the range of 150° or more and 180° or less).

In a state where the placement tray **103** is located in the fixed position, the lower surface **104***b* of the protruding portion of the side guide **104** is inclined with respect to the lower guide surface **101***a* of the lower housing **101**. The lower surface **104***b* of the protruding portion of the side guide **104** is located higher, i.e., the further downstream position is the further away from the lower guide surface **101***a*. The angle formed between the lower surface **104***b* of the protruding portion of the side guide **104** and the lower guide surface **101***a* is set to, for example, an angle more than 0° and 30° or less.

FIG. **6** illustrates a state in the process of attaching the placement tray **103** to the lower housing **101**. In the state illustrated in FIG. **6**, the placement surface **103***a* and the lower guide surface **101***a* are positioned such that the placement surface **103***a* and the lower guide surface **101***a* form the first angle θ1 when the placement tray **103** is fixed to the lower housing **101**.

As illustrated in FIG. **6**, when the placement surface **103***a* and the lower guide surface **101***a* form the first angle θ1, a

size H1 of the entrance into the engaged portion **101***c* of the lower housing **101** in a thickness direction A4 perpendicular to the extending direction of the engaging portion **103***c* is smaller than a thickness T of the engaging portion **103***c*. Therefore, the engaging portion **103***c* gets caught at the entrance into the engaged portion **101***c* and is prevented from entering the engaged portion **101***c*. As described above, the engaged portion **101***c* restricts entry of the engaging portion **103***c* when the placement surface **103***a* forms the first angle θ1 with the lower guide surface **101***a*, i.e., at the same inclination as that at the fixed position, in attachment of the placement tray **103** to the lower housing **101**.

FIG. **7** illustrates a state in the process of attaching the placement tray **103** to the lower housing **101**, as in FIG. **6**. However, in the state illustrated in FIG. **7**, the placement tray **103** is inclined with respect to the fixed position. That is, the placement surface **103***a* and the lower guide surface **101***a* are positioned such that the placement surface **103***a* and the lower guide surface **101***a* form a second angle θ2 different from the first angle θ1, which is formed by the placement surface **103***a* and the lower guide surface **101***a* when the placement tray **103** is fixed to the lower housing **101**. In particular, the second angle θ2 is smaller than the first angle θ1 and is set, for example in the range from 120° to 150°.

As described above, the upstream end big of the first engaged portion **101***e* is positioned downstream of and above the upper end **101***h* of the second engaged portion **101***f*, that is, in an oblique direction with respect to the height direction A3. Therefore, the Euclidean distance between the upstream end big of the first engaged portion **101***e* and the upper end **101***h* of the second engaged portion **101***f* is sufficiently larger than the distance in the height direction A3. In particular, as illustrated in FIG. **7**, when the placement surface **103***a* and the lower guide surface **101***a* form the second angle θ2, a size H2 of the entrance into the engaged portion **101***c* of the lower housing **101** in a thickness direction A5 perpendicular to the extending direction of the engaging portion **103***c* is equal to or more than the thickness T of the engaging portion **103***c*. Therefore, the engaging portion **103***c* can pass through the entrance into the engaged portion **101***c* and enter the engaged portion **101***c*.

FIG. **8** illustrates a state where the engaging portion **103***c* has entered the engaged portion **101***c* from the state illustrated in FIG. **7**. In the following description, the position in which the placement tray **103** is inclined with respect to the fixed position for attachment to the lower housing **101**, as illustrated in FIGS. **7** and **8**, may be referred to as the inclined position.

As illustrated in FIG. **8**, when the placement surface **103***a* forms the second angle θ2 with the lower guide surface **101***a*, the engaging portion **103***c* passes through the entrance into the engaged portion **101***c* and enters the engaged portion **101***c*. As described above, the engaged portion **101***c* allows entry of the engaging portion **103***c* when the placement surface **103***a* forms the second angle θ2 different from the first angle θ1 with the lower guide surface **101***a*, i.e., the placement surface **103***a* is positioned in the inclined position, in attachment of the placement tray **103** to the lower housing **101**.

That is, the entrance into the engaged portion **101***c* of the lower housing **101** has a shape that allows entry of the engaging portion **103***c* when the placement surface **103***a* and the lower guide surface **101***a* form the second angle θ2. Conversely, as illustrated in FIG. **6**, the entrance into the engaged portion **101***c* of the lower housing **101** has a shape that prevents entry of the engaging portion **103***c* when the placement surface **103***a* and the lower guide surface **101***a* form an angle (including the first angle θ1) outside a predetermined range with respect to the second angle θ2. This makes it possible for the medium conveying apparatus **100** to allow or restrict entry of the engaging portion **103***c* into the engaged portion **101***c* with a simple structure, and it is possible to set the placement tray **103** in a desirable manner while suppressing an increase in design and manufacturing man-hours for the medium conveying apparatus **100**.

FIG. **9** illustrates a state where the engaging portion **103***c* has further entered the engaged portion **101***c* from the state illustrated in FIG. **8**.

As illustrated in FIG. **9**, the placement tray **103** is moved downstream while the placement tray **103** is tilt down such that the angle formed between the placement surface **103***a* and the lower guide surface **101***a* becomes closer to the first angle θ1 from the second angle θ2. This causes the engaging portion **103***c* to further enter the engaged portion **101***c*. As described above, the lower surface **103***g* of the claw portion **103***f* is swingable upward and is formed to protrude downward. The lower surface **103***g* is pushed upward by the upper end **101***h* of the second engaged portion **101***f* while passing through the second engaged portion **101***f* and then returns to its original position to engage with the second engaged portion **101***f* after passing through the second engaged portion **101***f*.

When the engaging portion **103***c* of the placement tray **103** enters the engaged portion **101***c* of the lower housing **101**, the user may feel that the engaging portion **103***c* has engaged with the engaged portion **101***c* by the vibration that occurs when the engaging portion **103***c* of the placement tray **103** enters the engaged portion **101***c* of the lower housing **101** and the claw portion **103***f* engages with the second engaged portion **101***f*. This allows the medium conveying apparatus **100** to prevent the user from terminating the insertion operation of the placement tray **103** while the placement tray **103** is not completely inserted into the lower housing **101** and thus prevent the occurrence of damages to the placement tray **103** due to falling, etc.

From the state illustrated in FIG. **9**, the placement tray **103** is moved downstream until the downstream end **103***d* of the engaging portion **103***c* abuts the wall portion **101***i* and is then tilt down such that the angle formed between the placement surface **103***a* and the lower guide surface **101***a* further becomes closer to the first angle θ1. Accordingly, as illustrated in FIG. **5**, the downstream end **103***d* of the engaging portion **103***c* is fitted into the recessed portion **101***j* provided within the engaged portion **101***c*, and the engaging portion **103***c* is engaged with the engaged portion **101***c*. As the downstream end **103***d* is fitted into the recessed portion **101***j*, the removal of the placement tray **103** from the lower housing **101** is prevented even when a force is accidentally applied in a direction to remove the placement tray **103**. The upper surface and the lower surface of the engaging portion **103***c* are in contact with the first engaged portion **101***e* and the second engaged portion **101***f*, respectively, and the downstream surface **103***b* of the placement tray **103** is in contact with the upstream surface **101***b* of the lower housing **101** so that the placement tray **103** is stably supported and fixed to the lower housing **101**.

The second angle θ2 formed by the placement surface **103***a* and the lower guide surface **101***a* when the placement tray **103** is placed in the inclined position is set to be smaller than the first angle θ1 formed by the placement surface **103***a* and the lower guide surface **101***a* when the placement tray **103** is placed in the fixed position. Accordingly, when the placement tray **103** moves (swings) from the inclined posi-

tion to the fixed position, the angle formed by the placement surface **103***a* and the lower guide surface **101***a* approaches horizontal, and the downstream surface **103***b* of the placement tray **103** approaches the upstream surface **101***b* of the lower housing **101**. When the placement tray **103** is placed in the fixed position, the downstream surface **103***b* of the placement tray **103** is in contact with the upstream surface **101***b* of the lower housing **101**, and the placement tray **103** is stably supported by the lower housing **101**.

The operation of detaching the placement tray **103** from the lower housing **101** is performed by the procedure opposite to the operation of attaching the placement tray **103** to the lower housing **101**. Ina state where the placement tray **103** is attached to the lower housing **101** as illustrated in FIG. **5**, the downstream end **103***d* of the engaging portion **103***c* is fitted into the recessed portion **101***j* so that the engaging portion **103***c* is not removed from the engaged portion **101***c*.

As illustrated in FIG. **6**, when the placement surface **103***a* and the lower guide surface **101***a* form the first angle θ1, the size H1 of the entrance into the engaged portion **101***c* in the thickness direction A4 of the engaging portion **103***c* is smaller than the thickness T of the engaging portion **103***c*. Therefore, even when the downstream end **103***d* of the engaging portion **103***c* is not fitted into the recessed portion **101***j*, the engaging portion **103***c* is caught on the entrance into the engaged portion **101***c* and is not removed from the engaged portion **101***c*. Thus, the entrance into the engaged portion **101***c* of the lower housing **101** has a shape that prevents removal of the engaging portion **103***c* in a state where the placement surface **103***a* and the lower guide surface **101***a* form an angle (including the first angle θ1) outside the predetermined range with respect to the second angle θ2. Due to the shape of the entrance, the engaged portion **101***c* restricts removal of the engaging portion **103***c* when the placement surface **103***a* forms the first angle θ1 with the lower guide surface **101***a* in detachment of the placement tray **103** from the lower housing **101**.

The placement tray **103** is inclined from the state where the placement tray **103** is attached to the lower housing **101** such that the angle formed by the placement surface **103***a* and the lower guide surface **101***a* becomes closer to the second angle θ2 from the first angle θ1. Thus, as illustrated in FIG. **9**, the contact between the downstream end **103***d* of the engaging portion **103***c* and the recessed portion **101***j* is released, and the engaging portion **103***c* is separated from the engaged portion **101***c*. From this state, as illustrated in FIG. **8**, the placement tray **103** is inclined such that the angle formed by the placement surface **103***a* and the lower guide surface **101***a* becomes the second angle θ2, and the engaging portion **103***c* is pulled out of the engaged portion **101***c*, as illustrated in FIG. **7**. Thus, the entrance into the engaged portion **101***c* of the lower housing **101** has a shape that allows removal of the engaging portion **103***c* when the placement surface **103***a* and the lower guide surface **101***a* form the second angle θ2. Due to the shape of the entrance, the engaged portion **101***c* allows removal of the engaging portion **103***c* when the placement surface **103***a* forms the second angle θ2 with the lower guide surface **101***a* in detachment of the placement tray **103** from the lower housing **101**.

Thus, in the medium conveying apparatus **100**, the placement tray **103** is attachable to or detachable from the lower housing **101** when the placement tray **103** is inclined with respect to the fixed position, which is the installation position while in use (during media conveyance). The user tilt down the placement tray **103** after entering the lower housing **101** with inclined with respect to the fixed position and thus may easily attach the placement tray **103** to the lower housing **101**. Furthermore, the user inclines the placement tray **103** in the fixed position and thus may easily detach the placement tray **103** from the lower housing **101**. Conversely, the placement tray **103** in the fixed position is not detached from the lower housing **101** unless the placement tray **103** is inclined. Therefore, the medium conveying apparatus **100** may prevent the placement tray **103** from accidentally falling down when the user accidentally hits his/her hand on the medium conveying apparatus **100**, when the user carries the medium conveying apparatus **100**, etc.

For example, the medium conveying apparatus may include any locking mechanism to fix the placement tray to the housing. However, in such a case, the user performs a locking operation to lock the placement tray to the housing after attaching the placement tray to the housing, which reduces the user convenience. In addition, when the user forgets to perform the locking operation, the placement tray may fall down from the housing and get damaged.

On the other hand, in the medium conveying apparatus **100**, the user makes the placement tray **103** enter the lower housing **101** in an inclined state and then places the placement tray **103** in the fixed position so that the placement tray **103** is locked to the lower housing **101** at the same time the placement tray **103** is attached to the lower housing **101**. The user locks the placement tray **103** to the lower housing **101** in a series of attachment actions and thus may easily perform the locking operation. Thus, the medium conveying apparatus **100** may improve the user convenience. It is unlikely that the user forgets to place the placement tray **103** in the fixed position while making the placement tray **103** enter the lower housing **101** in a series of attachment actions. Therefore, the medium conveying apparatus **100** may prevent the user from forgetting to perform the operation to lock the placement tray **103** and may prevent the occurrence of falling, such as falling of the placement tray **103**.

In the medium conveying apparatus, the engaging portion on the placement tray side may be formed to be closely attached (press-fit) to the engaged portion on the housing side so that the detachable placement tray may be fixed to the housing. However, in such a case, in addition to the self-weight of the placement tray, the engaging portion and the engaged portion are subjected to the stress for joining the entire engaging portion and the entire engaged portion and supporting the placement tray. Accordingly, for example, when the user sets the medium on the placement tray, or when the user accidentally hits his/her hand on the placement tray, the engaging portion or the engaged portion is subjected to a large force, and the engaging portion or the engaged portion may get damaged. In addition, the user inserts the engaging portion on the placement tray side into the engaged portion on the housing side with a large force, and therefore the placement tray may fail to be inserted to the position where the placement tray is fixed to the housing. When the placement tray is not fixed, the medium may be lifted or skewed, which may result in media jams. Also, the user removes the engaging portion on the placement tray side from the engaged portion on the housing side with a large force.

Conversely, in the medium conveying apparatus **100**, only the self-weight of the placement tray **103** is applied to the engaging portion **103***c* and the engaged portion **101***c*. Therefore, in the medium conveying apparatus **100**, even when, for example, the user sets the medium on the placement tray **103**, or when the user accidentally hits his/her hand on the placement tray **103**, the force applied to the engaging portion

103*c* and the engaged portion **101***c* is sufficiently small, and the placement tray **103** is unlikely to get damaged. As described above, the user locks the placement tray **103** to the lower housing **101** in a series of attachment actions, and therefore the user is unlikely to forget to perform the operation to lock the placement tray **103**. Therefore, the medium conveying apparatus **100** may prevent the occurrence of lifting or skewing of the medium as the placement tray **103** is used in an unfixed state, and as a result, the occurrence of media jams may be prevented. In the medium conveying apparatus **100**, the engaging portion **103***c* on the placement tray **103** side and the engaged portion **101***c* on the lower housing **101** side are not formed to be closely attached to each other, and the user may insert and remove the placement tray **103** into and from the lower housing **101** with a little force.

As described above, the downstream end **103***d* of the engaging portion **103***c* of the placement tray **103** is provided to protrude further downstream than the downstream end **104***a* of the side guide **104** with respect to the downstream end **103***e* of the placement surface **103***a*. Specifically, the protrusion amount of the downstream end **104***a* of the side guide **104** is sufficiently smaller than the protrusion amount of the downstream end **103***d* of the engaging portion **103***c* of the placement tray **103**. Furthermore, the engaging portion **103***c* is located at a position sufficiently away from the downstream end **103***e* of the placement surface **103***a*. The lower surface **104***b* of the protruding portion of the side guide **104** is provided such that the further downstream portion is the further away from the lower guide surface **101***a*.

Accordingly, as illustrated in FIGS. **5** and **7** to **9**, the downstream end **104***a* of the side guide **104** does not come into contact with the lower guide surface **101***a* when the placement tray **103** is attached to or detached from the lower housing **101**. Specifically, the downstream end **104***a* of the side guide **104** in the medium conveying direction A1 is provided so as not to intersect with the lower guide surface **101***a* when viewed from the width direction A2 perpendicular to the medium conveying direction in attachment of the placement tray **103** to the lower housing **101** or detachment of the placement tray **103** from the lower housing **101**. In particular, as illustrated in FIG. **8**, the downstream end **104***a* of the side guide **104** in the medium conveying direction is provided so as not to intersect with the lower guide surface **101***a* when viewed from the width direction A2 perpendicular to the medium conveying direction when the placement surface **103***a* forms the second angle θ2 with the lower guide surface **101***a*.

Therefore, in the medium conveying apparatus **100**, there is no need to form a hole on the lower guide surface **101***a* for avoiding contact with the downstream end **104***a* of the side guide **104** and the lower guide surface **101***a* when attaching the placement tray **103** to the lower housing **101**. Therefore, in the medium conveying apparatus **100**, the lower guide surface **101***a* may be formed to be flat, and the medium may be guided in a desirable manner along the flat lower guide surface **101***a*.

FIG. **10** illustrates a conveyance path inside the medium conveying apparatus **100**.

The conveyance path inside the medium conveying apparatus **100** includes a medium sensor **111**, a feed roller **112**, a separation roller **113**, a first conveyance roller **114**, a second conveyance roller **115**, an imaging device **116**, a first discharge roller **117**, a second discharge roller **118**, etc.

The number of the feed rollers **112**, the separation rollers **113**, the first conveyance rollers **114**, the second conveyance rollers **115**, the first discharge rollers **117**, and/or the second discharge rollers **118** is not limited to one, but may be multiple. In that case, the feed rollers **112**, the separation rollers **113**, the first conveyance rollers **114**, the second conveyance rollers **115**, the first discharge rollers **117**, and/or the second discharge rollers **118** are each spaced side by side in the width direction A2.

The upper surface of the lower housing **101** forms the lower guide surface **101***a* of the conveyance path for media, and the lower surface of the upper housing **102** forms the upper guide surface **102***a* of the conveyance path for media.

The medium sensor **111** is located upstream of the feed roller **112** and the separation roller **113**. The medium sensor **111** includes a contact detection sensor to detect whether a medium is placed on the placement tray **103**. The medium sensor **111** generates and outputs a medium signal whose signal value changes between a state where a medium is placed on the placement tray **103** and a state where no medium is placed. The medium sensor **111** is not limited to a contact detection sensor, and any other sensor that may detect the presence or absence of a medium, such as an optical detection sensor, may be used as the medium sensor **111**.

The feed roller **112** is provided in the lower housing **101** to sequentially separate and feed the media placed on the placement tray **103**, starting from the medium on the bottom. The separation roller **113** is what is called a brake roller or retard roller, and is provided in the upper housing **102**, opposed to the feed roller **112**, and rotates in the direction opposite to the medium feeding direction.

The first conveyance roller **114** and the second conveyance roller **115** are located downstream of the feed roller **112**, opposed to each other, and convey the medium fed by the feed roller **112** and the separation roller **113** to the imaging device **116**.

The imaging device **116** is located downstream of the first conveyance roller **114** and captures images of the medium conveyed by the first conveyance roller **114**. The imaging device **116** includes a first imaging device **116***a* and a second imaging device **116***b* opposed to each other with the medium conveyance path interposed therebetween. The first imaging device **116***a* includes a line sensor using a contact image sensor (CIS) of same-magnification optics type including a complementary metal-oxide semiconductor (CMOS) imaging device arranged linearly in the main scanning direction. The first imaging device **116***a* includes a lens that forms an image on the imaging device and an analog-to-digital (A/D) converter that amplifies an electrical signal output from the imaging device and conducts A/D conversion. The first imaging device **116***a* generates and outputs an input image by capturing the front surface of the conveyed medium under the control of processing circuitry described below.

Similarly, the second imaging device **116***b* includes a line sensor using a CIS of same-magnification optics type including a CMOS imaging device arranged linearly in the main scanning direction. The second imaging device **116***b* includes a lens that forms an image on the imaging device and an A/D converter that amplifies an electrical signal output from the imaging device and conducts A/D conversion. The second imaging device **116***b* generates and outputs an input image by capturing the back surface of the conveyed medium under the control of the processing circuitry described below.

The medium conveying apparatus **100** may include one of the first imaging device **116***a* and the second imaging device **116***b* and may read one side of the medium. Instead of the line sensor using the CIS of same-magnification optics type

including the CMOS imaging device, a line sensor using a CIS of same-magnification optics type including a charge coupled device (CCD) imaging device may be used. A line sensor of reduced optics type including a CMOS or CCD imaging device may also be used.

The first discharge roller **117** and the second discharge roller **118** are located downstream of the imaging device **116**, opposed to each other, and discharge the medium conveyed by the first conveyance roller **114** and the second conveyance roller **115** and captured by the imaging device **116** to the discharge tray **105**.

The medium placed on the placement tray **103** is conveyed between the lower guide surface **101***a* and the upper guide surface **102***a* toward the medium conveying direction A1 when the feed roller **112** rotates in the direction of arrow A6 in FIG. **10**, i.e., the medium feeding direction. The separation roller **113** rotates in the direction of arrow A7, i.e., the direction opposite to the medium feeding direction, during media feeding. Because of the actions of the feed roller **112** and the separation roller **113**, when a plurality of media is placed on the placement tray **103**, the medium in contact with the feed roller **112** among the media placed on the placement tray **103** is separated. This restricts the conveyance of media other than the separated medium (prevention of overlapped feeding).

The medium is fed between the first conveyance roller **114** and the second conveyance roller **115** while being guided by the lower guide surface **101***a* and the upper guide surface **102***a*. The medium is fed between the first imaging device **116***a* and the second imaging device **116***b* when the first conveyance roller **114** and the second conveyance roller **115** rotate in the directions of arrows A8 and A9, respectively. The medium read by the imaging device **116** is discharged to the discharge tray **105** when the first discharge roller **117** and the second discharge roller **118** rotate in the directions of arrows A10 and A11, respectively.

FIG. **11** is a block diagram illustrating a schematic configuration of the medium conveying apparatus **100**.

In addition to the above-described configuration, the medium conveying apparatus **100** further includes a motor **131**, an interface device **132**, a storage device **140**, and processing circuitry **150**.

The motor **131** includes one or more motors and, according to control signals from the processing circuitry **150**, rotates the feed roller **112**, the separation roller **113**, the first conveyance roller **114**, the second conveyance roller **115**, the first discharge roller **117**, and the second discharge roller **118** to convey a medium. One of the first conveyance roller **114** and the second conveyance roller **115** may be a driven roller that is driven and rotated by the other roller. One of the first discharge roller **117** and the second discharge roller **118** may be a driven roller that is driven and rotated by the other roller.

The interface device **132** includes an interface circuit equivalent to a serial bus, such as a Universal Serial Bus (USB), and is electrically connected to an information processing device (e.g., personal computer, or portable information terminal) to transmit and receive input images and various types of information. Instead of the interface device **132**, a communication unit may be used, which includes an antenna that transmits and receives wireless signals and a wireless communication interface device that transmits and receives signals through a wireless communication line according to a predetermined communication protocol. The predetermined communication protocol is, for example, a wireless local area network (LAN). The communication unit may include a wired communication interface device that transmits and receives signals through a wired communication line according to a communication protocol such as a wired LAN.

The storage device **140** includes a memory device such as a random access memory (RAM) or a read only memory (ROM), a fixed disk device such as a hard disk, or a portable storage device such as a flexible disk or an optical disk. The storage device **140** stores computer programs, databases, tables, etc. used for various processes of the medium conveying apparatus **100**. The computer program may be installed from a portable computer-readable recording medium to the storage device **140** by using a known setup program, etc. The portable recording medium is, for example, a compact disc read only memory (CD-ROM) and a digital versatile disc read only memory (DVD-ROM).

The processing circuitry **150** operates based on a program previously stored in the storage device **140**. The processing circuitry is, for example, a central processing unit (CPU). A digital signal processor (DSP), large scale integration (LSI), an application specific integrated circuit (ASIC), a field-programmable gate array (FPGA), or the like, may be used as the processing circuitry **150**.

The processing circuitry **150** is connected to the operating device **106**, the display device **107**, the medium sensor **111**, the imaging device **116**, the motor **131**, the interface device **132**, the storage device **140**, etc., to control each of these units. Based on the medium signal received from the medium sensor **111**, the processing circuitry **150** controls the drive of the motor **131**, controls the image capture of the imaging device **116**, etc., acquires input images from the imaging device **116**, and transmits the input images to the information processing device via the interface device **132**.

FIG. **12** illustrates schematic configurations of the storage device **140** and the processing circuitry **150**.

As illustrated in FIG. **12**, the storage device **140** stores a control program **141**, an image acquisition program **142**, etc. Each of these programs is a functional module implemented by software running on a processor. The processing circuitry **150** reads each program stored in the storage device **140** and operates in accordance with each read program. Thus, the processing circuitry **150** functions as a control module **151** and an image acquisition module **152**.

FIG. **13** is a flowchart illustrating an example of an operation of a medium reading process of the medium conveying apparatus **100**.

An example of the operation of the medium reading process of the medium conveying apparatus **100** will be described below with reference to the flowchart illustrated in FIG. **13**. The flow of the operation described below is performed primarily by the processing circuitry **150** in cooperation with each element of the medium conveying apparatus **100** based on a program previously stored in the storage device **140**.

First, the control module **151** waits until an instruction to read the medium is input by the user using the operating device **106** or the information processing device and an operation signal indicating the reading of the medium is received from the operating device **106** or the interface device **132** (step S**101**).

Subsequently, the control module **151** acquires a medium signal from the medium sensor **111** and, based on the acquired medium signal, determines whether a medium is present on the placement tray **103** (step S**102**). When no medium is present on the placement tray **103**, the control module **151** terminates the series of steps.

Conversely, when a medium is present on the placement tray **103**, the control module **151** rotates the feed roller **112**,

the separation roller **113**, the first conveyance roller **114**, the second conveyance roller **115**, the first discharge roller **117**, and/or the second discharge roller **118** (step S**103**). The control module **151** drives the motor **131** to rotate each roller and convey the medium.

Subsequently, the control module **151** causes the imaging device **116** to capture the medium, acquires an input image from the imaging device **116**, and transmits the acquired input image to the information processing device via the interface device **132** to output the input image (step S**104**).

Subsequently, the control module **151** determines whether a medium remains on the placement tray **103** based on the medium signal received from the medium sensor **111** (step S**105**). When a medium remains on the placement tray **103**, the control module **151** returns the process to Step S**104** and repeats the process of Steps S**104** and S**105**.

Conversely, when no medium remains on the placement tray **103**, the control module **151** stops the feed roller **112**, the separation roller **113**, the first conveyance roller **114**, the second conveyance roller **115**, the first discharge roller **117**, and/or the second discharge roller **118** (step S**106**). The control module **151** controls the motor **131** to stop each roller and terminates the series of steps.

As described in detail above, in the medium conveying apparatus **100**, the placement tray **103** is provided such that the placement tray **103** is inserted into the lower housing **101** in an inclined state, and the downstream end **104***a* of the side guide **104** is not in contact with the lower guide surface **101***a* when the placement tray **103** is inclined. Thus, the medium conveying apparatus **100** allows the detachable placement tray **103** to be set in a desirable manner and allows the medium to be guided in a desirable manner.

In particular, the medium conveying apparatus **100** allows the user to easily set the placement tray **103** in the lower housing **101** without using complicated operations and excessive insertion force. Similarly, in the medium conveying apparatus **100**, the user may easily detach the placement tray **103** while not in use for compact storage and at the time of occurrence of a medium jam for easy recovery.

The medium conveying apparatus **100** may prevent the occurrence of damages to the placement tray **103** when the user accidentally hits his/her hand on the medium conveying apparatus **100** during a user operation such as carrying the medium conveying apparatus **100** or setting a medium on the placement tray **103**. In particular, the placement tray **103** is provided such that the placement tray **103** can be detached when inclined upward. Therefore, the medium conveying apparatus **100** may prevent the placement tray **103** from falling down and getting damaged when a downward force is applied to set a medium on the placement tray **103**, or when a force is applied to the placement tray **103** in a direction parallel to the lower guide surface **101***a*.

FIGS. **14** and **15** are schematic views illustrating an engaged portion **201***c* and an engaging portion **203***c* in a medium conveying apparatus according to another embodiment. FIGS. **14** and **15** are cross-sectional views of an area around the engaged portion **201***c* and the engaging portion **203***c* when viewed from the side.

As illustrated in FIGS. **14** and **15**, in the medium conveying apparatus according to the present embodiment, the downstream surface **103***b* of the placement tray **103** includes the engaging portion **203***c* instead of the engaging portion **103***c*. The upstream surface **101***b* of the lower housing **101** includes the engaged portion **201***c* that is engageable with the engaging portion **203***c* instead of the engaged portion **101***c*.

The engaging portion **203***c* has a similar configuration to that of the engaging portion **103***c*. However, the engaging portion **203***c* protrudes from the downstream surface **103***b* such that the downstream side thereof is located at an upper position, and the downstream end **203***d* of the engaging portion **203***c* is formed to protrude downward. An elastic claw portion **203***f* is provided inside the engaging portion **203***c*.

The engaged portion **201***c* has a similar configuration to that of the engaged portion **101***c*. However, the engaged portion **201***c* includes a first engaged portion **201***e* and a second engaged portion **201***f*. The first engaged portion **201***e* is provided below the engaging portion **203***c*, which is located in the engaged portion **201***c*, to extend substantially parallel to the extending direction of the engaging portion **203***c*. A downstream end of the first engaged portion **201***e* includes a wall portion **201***i* and a recessed portion **201***j*. The second engaged portion **201***f* is provided above the engaging portion **203***c*, which is located in the engaged portion **201***c*, to extend substantially parallel to the height direction A3. The first engaged portion **201***e* and the second engaged portion **201***f* form an entrance for the engaging portion **203***c* into the engaged portion **201***c*. An upstream end **201***g* of the first engaged portion **201***e* is positioned downstream of and below a lower end **201***h* of the second engaged portion **201***f*, and therefore the entrance is formed to open upstream and downward.

As illustrated in FIG. **14**, when the downstream end **203***d* of the engaging portion **203***c* abuts the wall portion **201***i* and is fitted into the recessed portion **201***j*, the engaging portion **203***c* is engaged with the engaged portion **201***c*. However, as the placement tray **103** is supported by the lower housing **101** with the downstream end **203***d* and the recessed portion **201**J, the stability of the placement tray **103** according to the present embodiment is lower than that of the placement tray **103** of the medium conveying apparatus **100**.

The placement surface **103***a* of the placement tray **103** is positioned to form the first angle θ1 with the lower guide surface **101***a* of the lower housing **101** when the placement tray **103** is fixed to the lower housing **101**. The engaged portion **201***c* restricts entry or removal of the engaging portion **203***c* when the placement surface **103***a* forms the first angle θ1 with the lower guide surface **101***a* in attachment of the placement tray **103** to the lower housing **101** or detachment of the placement tray **103** from the lower housing **101**.

On the other hand, in the state illustrated in FIG. **15**, the placement surface **103***a* and the lower guide surface **101***a* are positioned to form a second angle θ3 that is different from the first angle θ1. The second angle θ3 is larger than the first angle θ1 and is set, for example in the range from 210° to 240°. As illustrated in FIG. **15**, the engaged portion **201***c* allows entry or removal of the engaging portion **203***c* when the placement surface **103***a* forms the second angle θ3 with the lower guide surface **101***a* in attachment of the placement tray **103** to the lower housing **101** or detachment of the placement tray **103** from the lower housing **101**.

As described in detail above, in the medium conveying apparatus, even when the second angle θ3 is set to be larger than the first angle θ1, it is possible to set the detachable placement tray **103** in a desirable manner and guide the medium in a desirable manner.

FIGS. **16** and **17** are schematic views illustrating an engaged portion **301***c* and an engaging portion **303***c* in a medium conveying apparatus according to further another embodiment. FIGS. **16** and **17** are cross-sectional views of

an area around the engaged portion **301***c* and the engaging portion **303***c* when viewed from the side.

As illustrated in FIGS. **16** and **17**, in the medium conveying apparatus according to the present embodiment, the downstream surface **103***b* of the placement tray **103** includes the engaging portion **303***c* instead of the engaging portion **103***c*. The upstream surface **101***b* of the lower housing **101** includes the engaged portion **301***c* that is engageable with the engaging portion **303***c* instead of the engaged portion **101***c*.

The engaging portion **303***c* has a similar configuration to that of the engaging portion **103***c*. However, the elastic claw portion **103***f* is not provided in the engaging portion **303***c* and, instead, a recessed portion **303***i* is provided on a lower surface of the engaging portion **303***c*.

The engaged portion **301***c* has a similar configuration to that of the engaged portion **101***c*. However, the engaged portion **301***c* includes a second engaged portion **301***f* instead of the second engaged portion **101***f*. The second engaged portion **301***f* includes a first surface **301***k* and a second surface **301***l*. The first surface **301***k* and the second surface **301***l* located in the engaged portion **301***c* are provided below the engaging portion **303***c*. The first surface **301***k* and the second surface **301***l* are provided to extend substantially parallel to the height direction A3 and the extending direction of the engaging portion **303***c*, respectively, and have an L-shape. The second surface **301***l* is elastic and is swingable with an upstream end connected to the first surface **301***k* as a swing axis. The second surface **301***l* swings downward when pressed from above by the engaging portion **303***c*. A downstream end **301***m* of the second surface **301***l* is formed to protrude upward.

As illustrated in FIG. **17**, when the placement tray **103** is attached to or detached from the lower housing **101**, the engaging portion **303***c* enters or is removed from the engaged portion **301***c* in an inclined state. While the engaging portion **303***c* moves along the second surface **301***l*, the second surface **301***l* is pushed down by the engaging portion **303***c*. When the placement tray **103** is attached to the lower housing **101**, the recessed portion **303***i* on the lower surface of the engaging portion **303***c* moves to the position opposed to the downstream end **301***m* of the second engaged portion **301***f* and engages with the end portion **301***m*, as illustrated in FIG. **16**.

The user may feel that the engaging portion **303***c* has engaged with the engaged portion **301***c* by the vibration that occurs when the engaging portion **303***c* enters the engaged portion **301***c* and the end portion **301***m* engages with the recessed portion **303***i*. This allows the medium conveying apparatus to prevent the user from terminating the insertion operation of the placement tray **103** while the placement tray **103** is not completely inserted into the lower housing **101** and thus prevent the occurrence of damages to the placement tray **103** due to falling, etc.

As described in detail above, in the medium conveying apparatus, even when the engaged portion **301***c* on the lower housing **101** side has elasticity, it is possible to set the detachable placement tray **103** in a desirable manner and to guide the medium in a desirable manner.

FIG. **18** is a schematic view illustrating an engaged portion **401***c* and an engaging portion **403***c* in a medium conveying apparatus according to further another embodiment. FIG. **18** is a cross-sectional view of the inside of the engaged portion **401***c* when viewed from above.

As illustrated in FIG. **18**, in the medium conveying apparatus according to the present embodiment, the placement tray **103** includes an engaging portion **403***c* instead of the engaging portion **103***c*. Instead of the engaged portion **101***c*, the lower housing **101** includes an engaged portion **401***c* that is engageable with the engaging portion **403***c*.

The engaging portion **403***c* has a similar configuration to that of the engaging portion **103***c*. However, the elastic claw portion **103***f* is not provided inside the engaging portion **403***c*, and instead, an elastic claw portion **403***f* is provided on the outer side of the engaging portion **403***c*. The claw portion **403***f* has an upstream end positioned on the downstream surface of the placement tray **103** and is swingable with the upstream end portion as a swing axis. A lower surface **403***g* of the claw portion **403***f* is formed to protrude downward. The claw portion **403***f* swings upward when the lower surface **403***g* is pressed upward.

The engaged portion **401***c* has a similar configuration to that of the engaged portion **101***c*. The lower housing **101** includes a receiving portion **401***n* that is engaged with the claw portion **403***f* on the outer side of the engaged portion **401***c*.

The user may feel that the engaging portion **403***c* has engaged with the engaged portion **401***c* by the vibration occurs when the engaging portion **403***c* of the placement tray **103** enters the engaged portion **401***c* of the lower housing **101** and the claw portion **403***f* engages with the receiving portion **401***n*. This allows the medium conveying apparatus to prevent the user from terminating the insertion operation of the placement tray **103** while the placement tray **103** is not completely inserted into the lower housing **101** and thus prevent the occurrence of damages to the placement tray **103** due to falling, etc.

As described in detail above, in the medium conveying apparatus, even when the claw portion **403***f* is provided on the outer side of the engaging portion **403***c*, it is possible to set the detachable placement tray **103** in a desirable manner and to guide the medium in a desirable manner.

FIG. **19** illustrates a schematic configuration of processing circuitry **550** in a medium conveying apparatus according to further another embodiment. The processing circuitry **550** is used instead of the processing circuitry **150** of the medium conveying apparatus **100** and executes a medium reading process, and the like, instead of the processing circuitry **150**. The processing circuitry **550** includes a control circuit **551**, an image acquisition circuit **552**, etc. Each of these components may be formed of an independent integrated circuit, a microprocessor, firmware, etc.

The control circuit **551** is an example of a control module and has a similar function to that of the control module **151**. The control circuit **551** receives operation signals from the operating device **106** or the interface device **132** and medium signals from the medium sensor **111**. The control circuit **551** controls the motor **131** based on each piece of information received.

The image acquisition circuit **552** is an example of an image acquisition module and has a similar function to that of the image acquisition module **152**. The image acquisition circuit **552** acquires input images from the imaging device **116** and outputs the input images to the interface device **132**.

As described in detail above, in the medium conveying apparatus, even when the processing circuitry **550** is used, it is possible to set the detachable placement tray **103** in a desirable manner and to guide the medium in a desirable manner.

Although the above is a description of suitable embodiments, embodiments are not limited to these embodiments. For example, in a medium conveying apparatus, the engaged portion on the upstream surface **101***b* of the lower housing **101** may have a projection shape that protrudes from the side

surface **101***b*, and the engaging portion on the downstream surface **103***b* of the placement tray **103** may have a recessed shape. In this case, too, the engaging portion and the engaged portion are engaged with each other, and the placement tray **103** is supported by the lower housing **101**.

The above-described embodiments are illustrative and do not limit the present invention. Thus, numerous additional modifications and variations are possible in light of the above teachings. For example, elements and/or features of different illustrative embodiments may be combined with each other and/or substituted for each other within the scope of the present invention. Any one of the above-described operations may be performed in various other ways, for example, in an order different from the one described above.

The invention claimed is:

1. A medium conveying apparatus, comprising:

a housing having an engaged portion and a guide surface for media;

a placement tray attachable to and detachable from the housing and having an engaging portion engageable with the engaged portion and a placement surface for media, wherein when fixed to the housing, the placement tray forms a first angle with the guide surface; and

a side guide mounted on the placement surface and protruding downstream beyond the placement tray in a medium conveying direction to restrict a medium in a width direction perpendicular to the medium conveying direction,

wherein the engaged portion is configured to:

restrict entry or removal of the engaging portion when the placement surface forms the first angle with the guide surface in attachment of the placement tray to the housing or detachment of the placement tray from the housing; and

allow entry or removal of the engaging portion when the placement surface forms a second angle different from the first angle with the guide surface in attachment of the placement tray to the housing or detachment of the placement tray from the housing, and

wherein a downstream end of the side guide in the medium conveying direction does not intersect with the guide surface as viewed from the width direction when the placement surface forms the second angle with the guide surface in attachment of the placement tray to the housing or detachment of the placement tray from the housing.

2. The medium conveying apparatus according to claim **1**, wherein an entrance into the engaged portion of the housing has a shape that allows entry or removal of the engaging portion when the placement surface and the guide surface form the second angle and prevents entry or removal of the engaging portion when the placement surface and the guide surface form an angle outside a predetermined range with respect to the second angle.

3. The medium conveying apparatus according to claim **1**, wherein a length by which the engaging portion protrudes downstream beyond the placement surface in the medium conveying direction is longer than a length by which the downstream end of the side guide protrudes downstream beyond the placement surface in the medium conveying direction.

4. The medium conveying apparatus according to claim **1**, wherein the placement surface and the guide surface are flush when the placement tray is fixed to the housing.

5. The medium conveying apparatus according to claim **1**, wherein the second angle is smaller than the first angle.

6. The medium conveying apparatus according to claim **1**, wherein when a projection portion of one of the engaging portion and the engaged portion is engaged with a recessed portion of the other of the engaging portion and the engaged portion, the placement tray is positioned with respect to the housing in the width direction perpendicular to the medium conveying direction.

* * * * *