US 20250269497A1

(19) United States

(12) Patent Application Publication

(10) Pub. No.: US 2025/0269497 A1

(43) Pub. Date: Aug. 28, 2025

GOICHMAN et al.

(54) **MULTI-FORMAT VACUUM TABLE FOR FLATTENING ELECTRONIC COMPONENT PANELS**

(71) Applicant: **Orbotech Ltd.**, Yavne (IL)

(72) Inventors: **Tal GOICHMAN**, Kiryat Ono (IL); **Eyal ZALEWSKI**, Tel Aviv (IL); **Mordechai Hai HABABO**, Rosh Haaiin (IL)

(21) Appl. No.: **18/647,966**

(22) Filed: **Apr. 26, 2024**

Related U.S. Application Data

(60) Provisional application No. 63/556,873, filed on Feb. 23, 2024.

Publication Classification

(51) **Int. Cl.**

B25B 11/00 (2006.01)

B21D 1/00 (2006.01)

(52) **U.S. Cl.**

CPC ***B25B 11/005*** (2013.01); ***B21D 1/00*** (2013.01)

(57) **ABSTRACT**

A vacuum table for supporting and flattening an electronic component includes a base plate structure comprising a top surface defining a plurality of suction arrangements. The vacuum table also includes a plurality of lip seals operatively coupled to the base plate structure and extending upwardly beyond the top surface of the base plate structure, the plurality of lip seals arranged to define a plurality of portions of the vacuum table, wherein each of the plurality of portions of the vacuum table includes at least one of the plurality of suction arrangements therein.

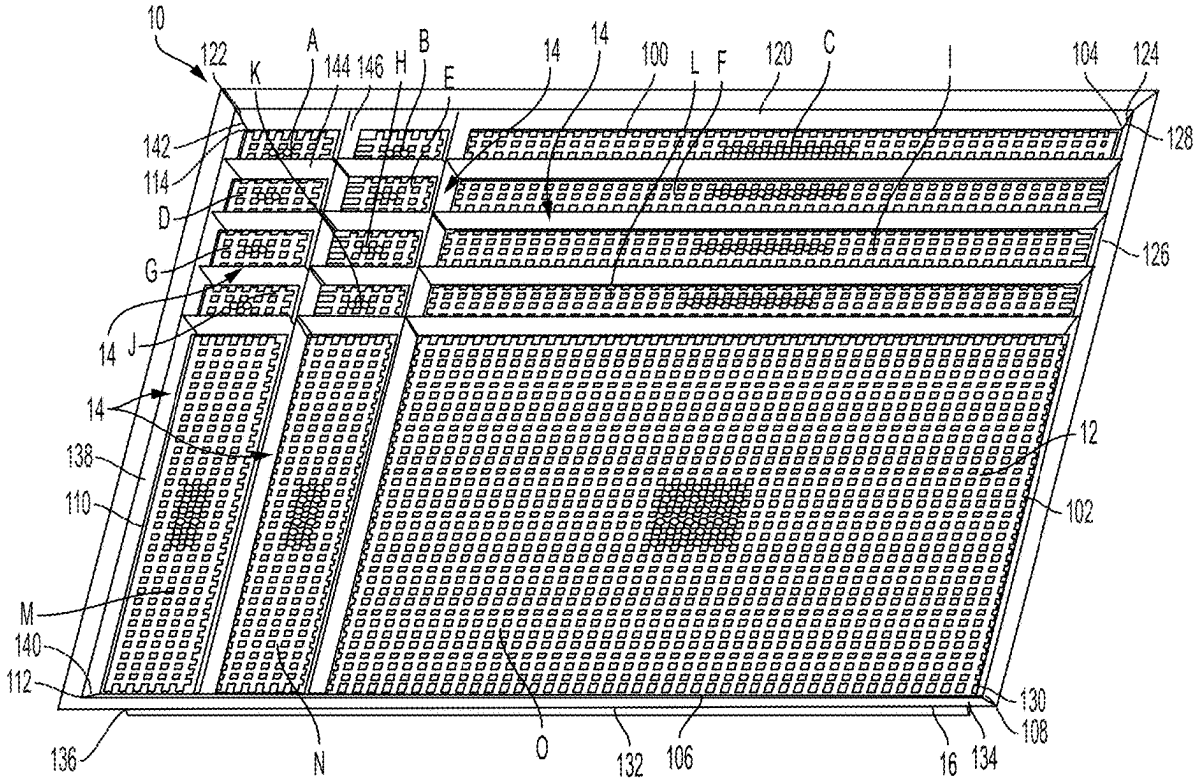

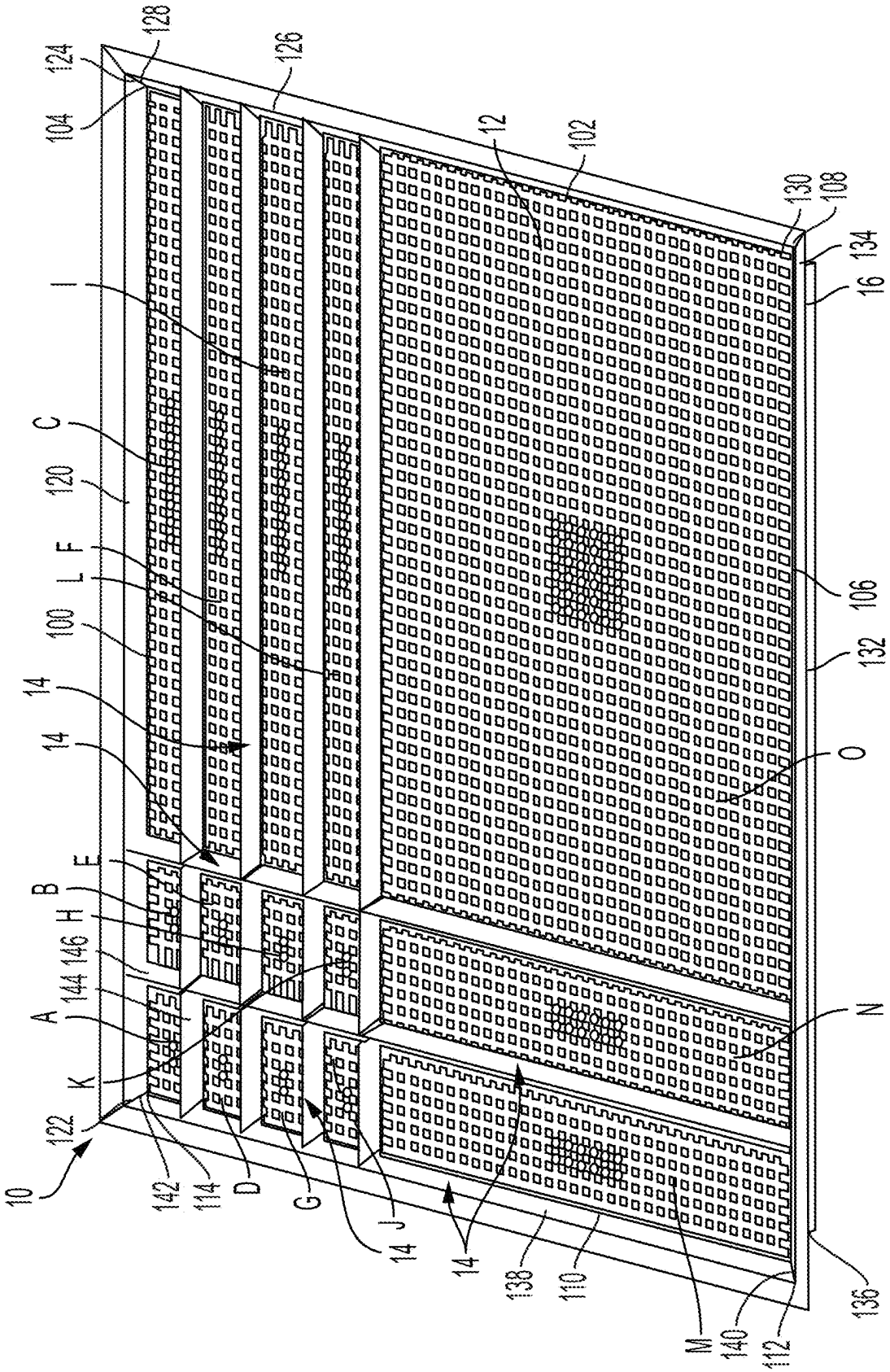
10
122
142
114
D
G
14
J
14
138
110
M
140
112
136
N
O
132
106
16
134
130
108
12
102
126
128
124
104
I
C
120
F
L
100
14
14
E
B
H
146
144
A
K

FIG. 1

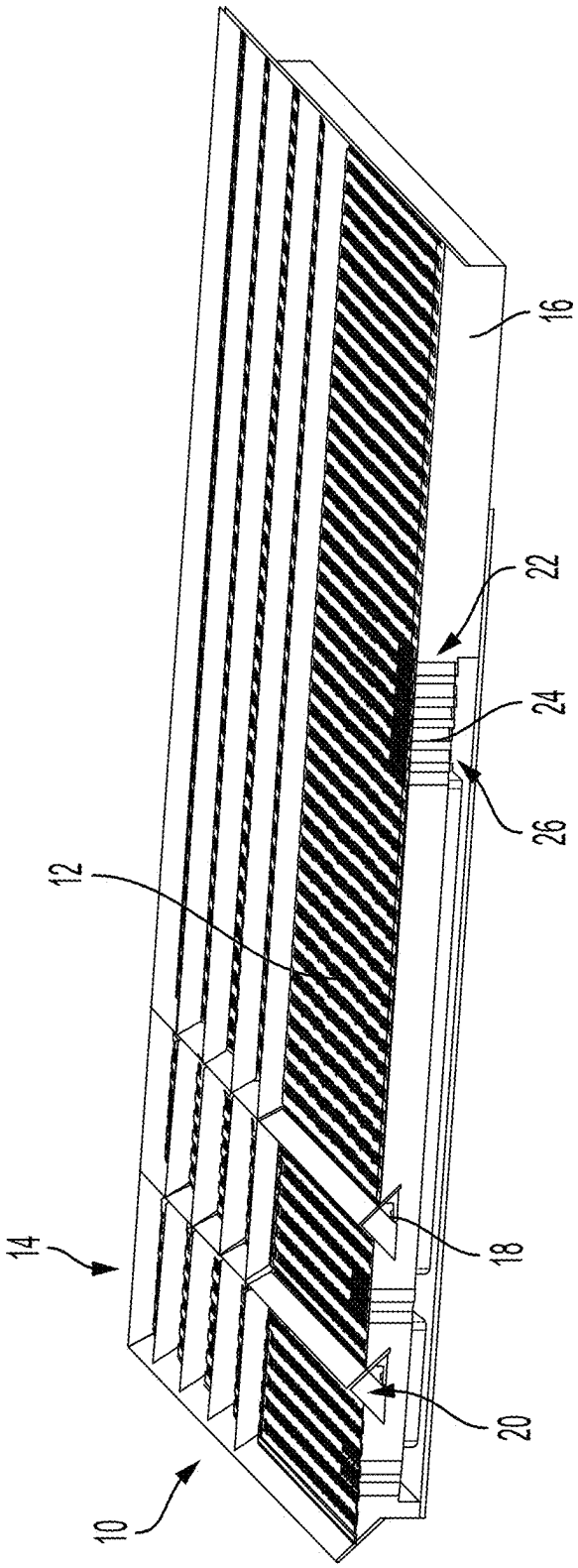

FIG. 2

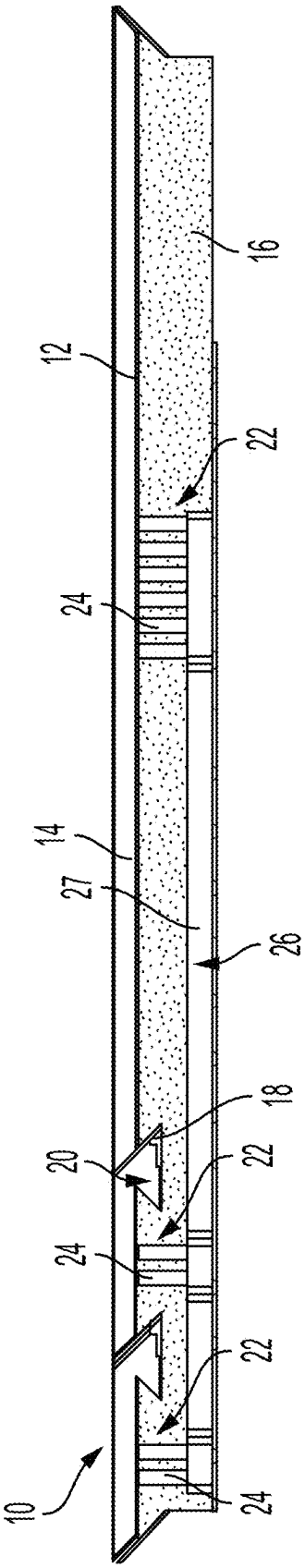

FIG. 3

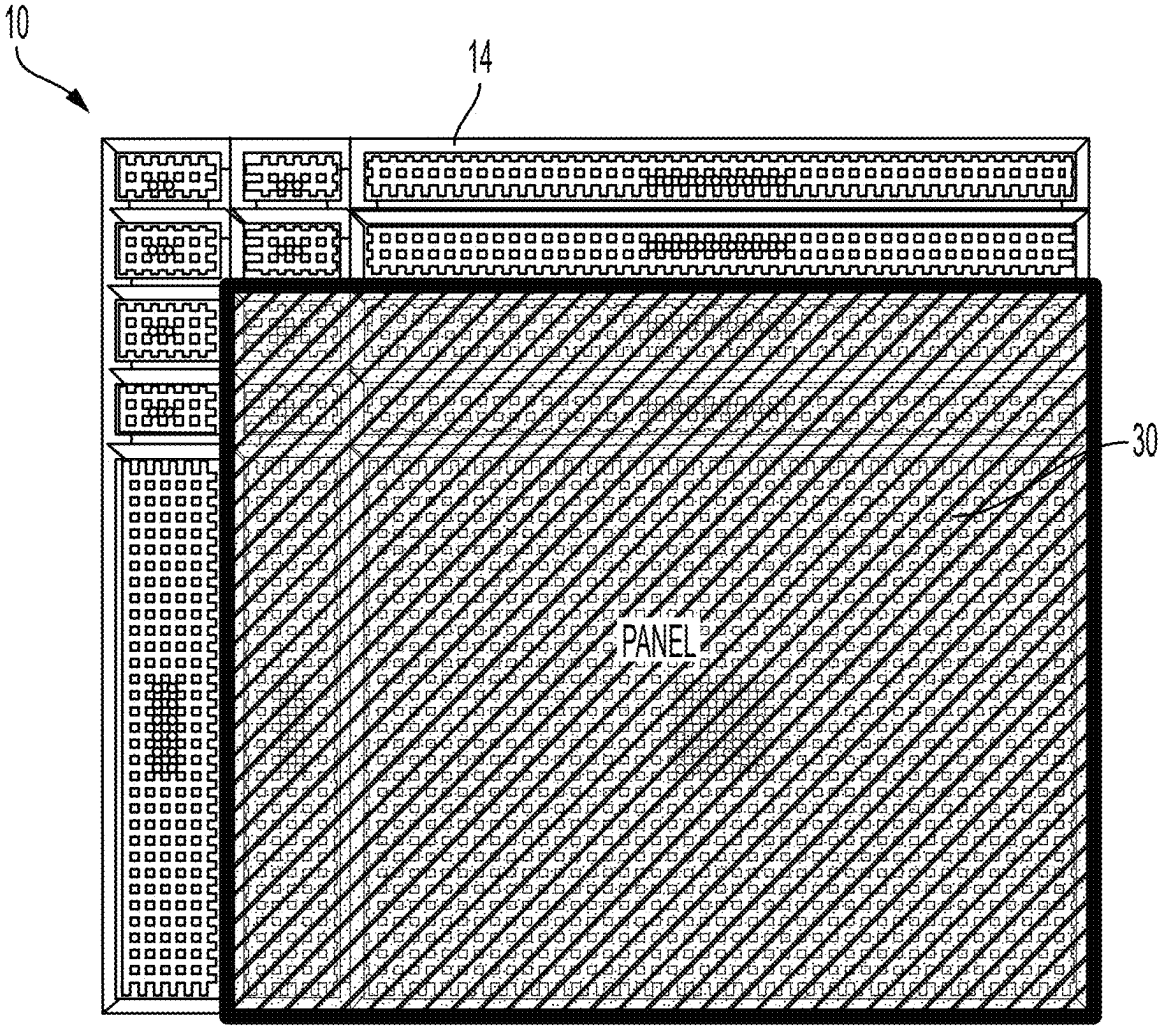

FIG. 4

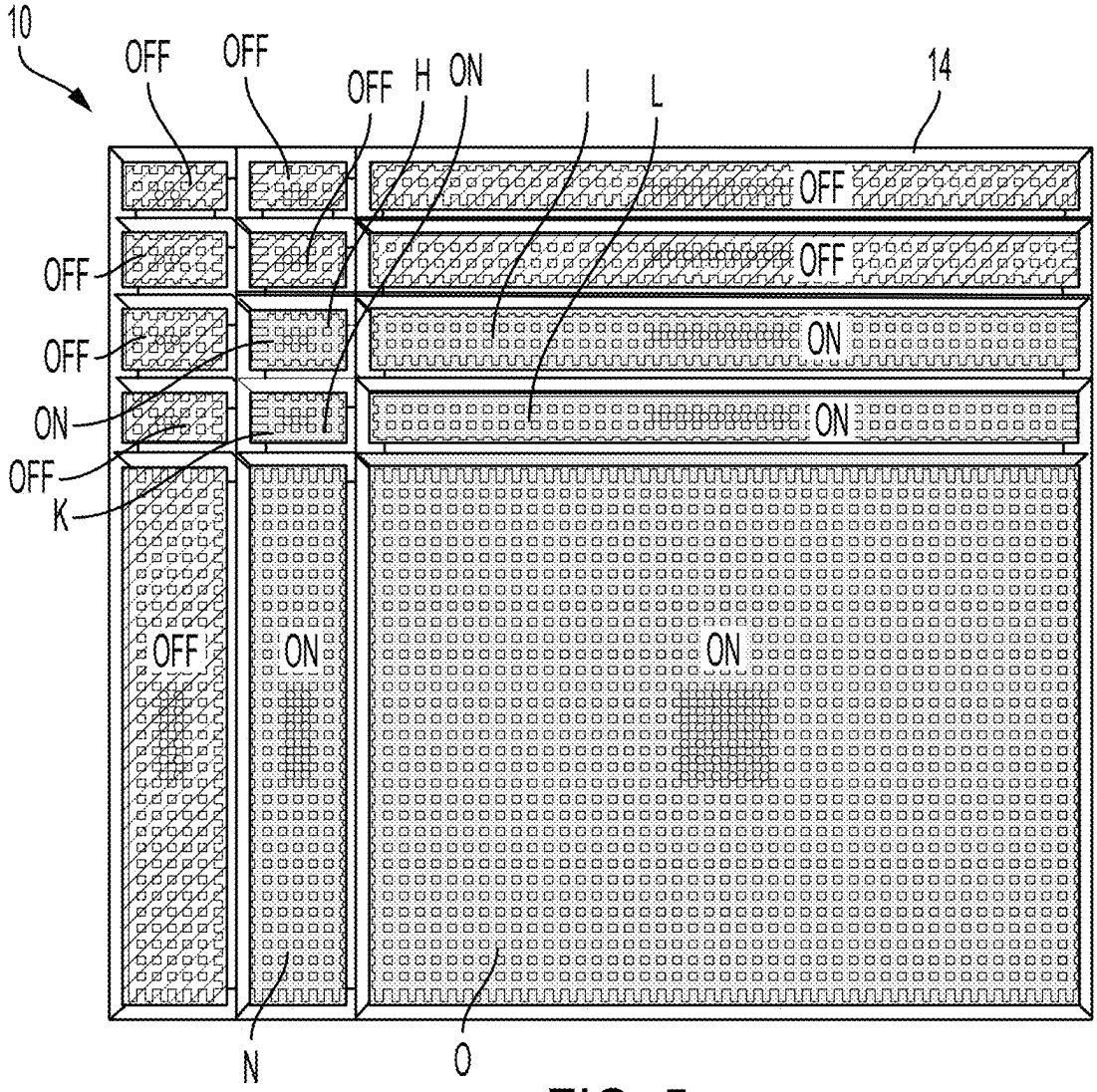

FIG. 5

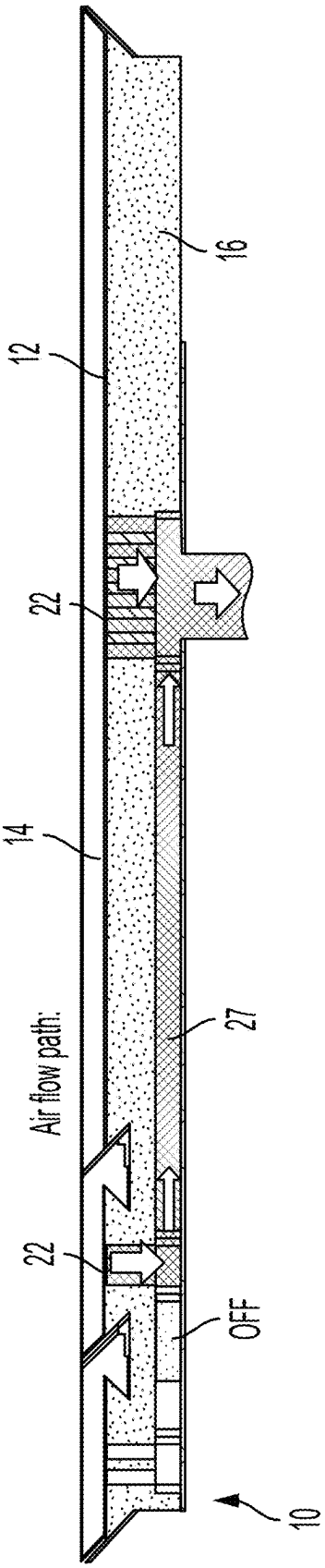

FIG. 6

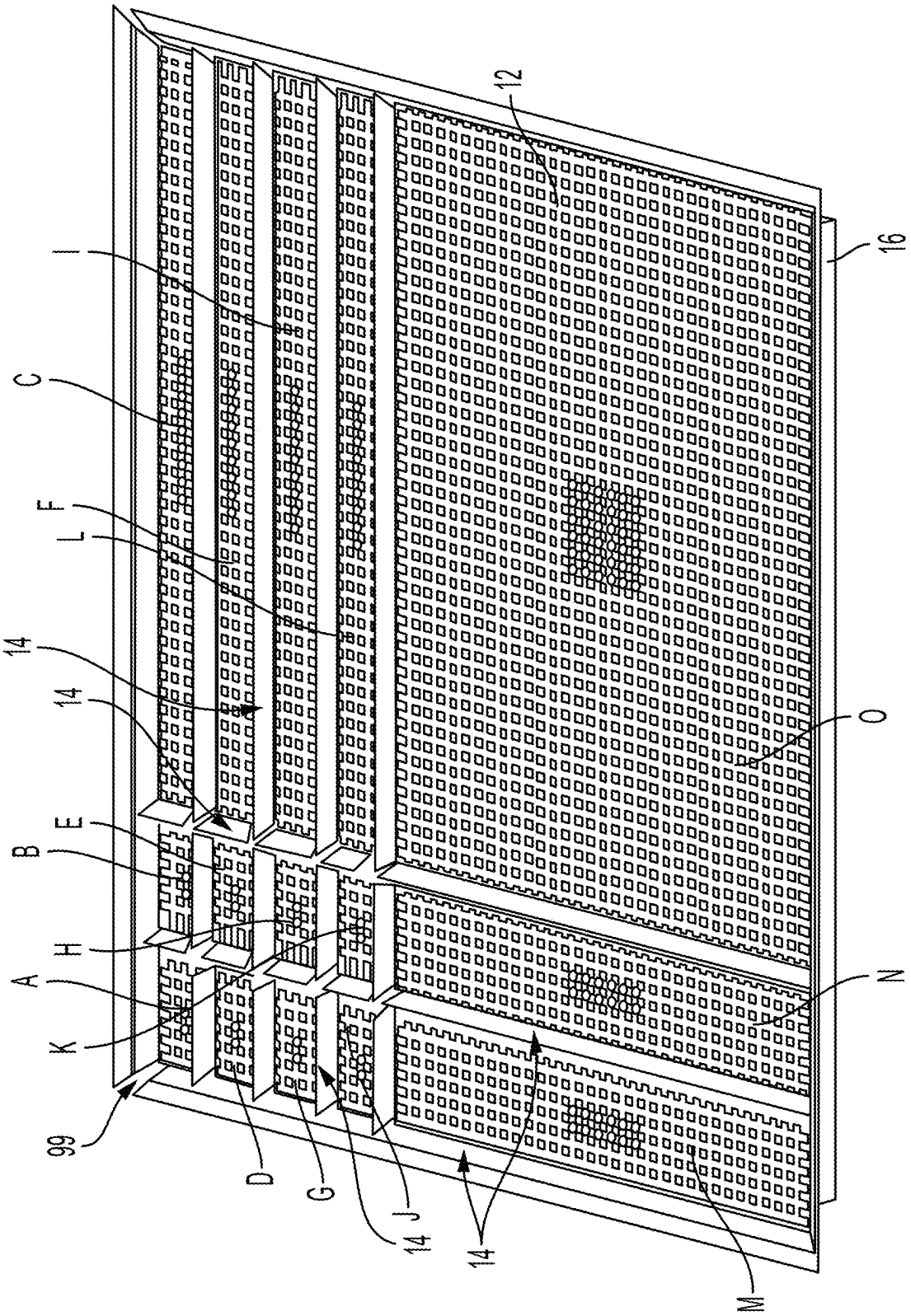

FIG. 7

MULTI-FORMAT VACUUM TABLE FOR FLATTENING ELECTRONIC COMPONENT PANELS

CROSS-REFERENCE TO RELATED APPLICATION

[0001] This applications claims the benefits of priority to U.S. Provisional Patent Application Ser. No. 63/556,873, filed Feb. 23, 2024, the disclosure of which is incorporated by reference herein in its entirety.

FIELD OF THE INVENTION

[0002] The embodiments described herein relate to electronic component inspection and manufacturing systems and, more particularly, to a multi-format vacuum table for flattening panels.

BACKGROUND

[0003] Inspection processes are used at various steps during a manufacturing process to detect defects on wafers, panels or other electronic components to promote higher yield and quality in the manufacturing process, thereby obtaining higher profits. Additionally, processing steps may be performed on the electronic component, such as deposition on a substrate.

[0004] Many fabrication, metrology and defect inspection processes require loading wafers, panels or the like on a process machine table. The electronic components to be inspected or processed come in various formats, such as different widths, lengths and thicknesses, for example. The existing method for handling multiple formats is by using what may be referred to as a master plate for each category of component. A thin plate (e.g., 1 mm thick) typically covers all or most of the table vacuum area and includes an array of holes which correspond to a given panel area size, thus avoiding vacuum leakage. So, for each panel format there is a dedicated master plate with a unique pattern of holes.

[0005] If the panel is warped, external mechanical clamps are applied to exert a force on the peripheral area of the panel. Since the panel can be of various formats, there several solutions for adjustable format clamps, each typically requiring a complicated mechanism to adjust the compatible format. In some cases, since the panels are pressure sensitive, additional soft materials and soft springs are used in clamps to prevent breakage of the panel. The clamping force is normally activated by pneumatic pistons or electric actuators.

[0006] The requirement to manually replace master plates for each format swap takes time and manual labor, may break clean room requirements in some cases, and creates a sandwiched structure between a machined vacuum table and the panel, which may lead to additional warpage ("non-flatness") of the panel. As for the clamping requirement, such mechanical clamping is local, leading to uncontrolled contact stress in the clamped regions of the panel. The clamping is typically applied at the perimeter of the warped panel to avoid damaging the functional area of the panel. For brittle warped panels (e.g., glass) the local force application produces contact stresses and/or may break the panel by bending the raised edges. Additionally, the clamps have to be adjusted to different formats, thereby creating a cumbersome and complex clamping mechanism and process.

SUMMARY OF THE DISCLOSURE

[0007] According to one aspect of the disclosure, a vacuum table for supporting and flattening an electronic component includes a base plate structure comprising a top surface defining a plurality of suction arrangements. The vacuum table also includes a plurality of lip seals operatively coupled to the base plate structure and extending upwardly beyond the top surface of the base plate structure, the plurality of lip seals arranged to define a plurality of portions of the vacuum table, wherein each of the plurality of portions of the vacuum table includes at least one of the plurality of suction arrangements therein.

[0008] According to another aspect of the disclosure, a vacuum table for supporting and flattening an electronic component includes a base plate structure comprising a top surface and defining one or more interconnected channels and a plurality of through holes, the plurality of through holes extending from the plurality of interconnected channels and through the top surface of the base plate structure, and the plurality of through holes comprising a first suction arrangement and a second suction arrangement fluidly connected by the one or more interconnected channels. The vacuum table also includes a first valve positioned in the one or more interconnected channels, the first valve configured to selectively control airflow from the first suction arrangement to the second suction arrangement. The vacuum table further includes a plurality of lip seals coupled to the top surface and arranged to create a plurality of portions of the vacuum table, the first suction arrangement extending into a first portion of the plurality of portions, and the second suction arrangement extending into a second portion of the plurality of portions.

[0009] These aspects and other advantages and features are apparent from the following description taken in conjunction with the drawings.

BRIEF DESCRIPTION OF THE DRAWINGS

[0010] The subject matter that is regarded as embodiments of the invention is particularly pointed out and distinctly claimed in the claims at the conclusion of the specification. The features and advantages of the disclosed embodiments are apparent from the following detailed description taken in conjunction with the accompanying drawings in which:

[0011] FIG. **1** is a top perspective view of a multi-format vacuum table;

[0012] FIG. **2** is a front perspective view of the multi-format vacuum table;

[0013] FIG. **3** is a front, elevation, cross-sectional view of the multi-format vacuum table;

[0014] FIG. **4** is a top view of the multi-format vacuum table illustrating one format of usage;

[0015] FIG. **5** is a top view of the multi-format vacuum table illustrating vacuum airflow during usage in the format shown in FIG. **4**;

[0016] FIG. **6** is a front, elevation, cross-sectional view of the multi-format vacuum table illustrating airflow during usage in the format shown in FIGS. **4** and **5**; and

[0017] FIG. **7** is a top perspective view of the multi-format vacuum table according to another aspect of the disclosure.

DETAILED DESCRIPTION

[0018] Referring to the drawings, where the invention will be described with reference to specific embodiments, it is to

be understood that the disclosed embodiments are merely examples of the invention that may be embodied in various and alternative forms. The drawings are not necessarily to scale, as some features may be exaggerated, reduced or simplified to show details of particular components. Therefore, specific structural and functional details disclosed herein and illustrated in the drawings are not to be interpreted as limiting, but merely as a representative basis for teaching one skilled in the art to variously employ the invention.

[0019] Referring to FIG. **1**, a multi-format vacuum table is schematically shown and generally referenced with numeral **10**. The multi-format vacuum table **10** may also simply be referred to as the vacuum table **10** herein. The vacuum table **10** is configured to be used in the inspection and manufacturing processing of electronic components. The electronic components may be any suitable wafer/substrate suitable substrates, panels for flat panel displays, solar panels, reticles or any other suitable object. Therefore, the term "electronic components", as used herein, refers generically to any of the aforementioned objects, but is not limited thereto.

[0020] The vacuum table **10** is constructed to support, flatten and retain electronic components of various types and sizes, including different widths, lengths and thicknesses on a top surface **12** of the vacuum table **10**. The top surface **12** is segmented by lip seals **14** which protrude upwardly from the top surface **12** to define multiple portions which may be used to accommodate the different types and sizes of electronic components. In the illustrated embodiment, fifteen (15) portions are provided, with five rows of three columns present. The illustrated portions are referenced with letters A through O. The top surface **12** of the vacuum table **10** may define or extend between a first edge **100**, a second edge **102**, a third edge **106** and a fourth edge **110**. Respective ends of the first edge **100** and the second edge **102** meet at a first corner **104** of the top surface **12**. The second edge **102** extends away from the first corner **104** to meet the third edge **106** at a second corner **108**. The third edge **106** extends away from the second corner **108** to meet the fourth edge **110** at a third corner **112**. The fourth edge **110** extends away from the third corner **112** to meet the first edge **100** at a fourth corner **114**.

[0021] A first lip seal **120** of the plurality of lip seals **14** extends from proximate the first edge **100** of the top surface **12** of the vacuum table **10**. The first lip seal **120** extends between a first end **122** and a second end **124**. A second lip seal **126** extends from proximate the second edge **102** of the top surface **12** and between a first end **128** and a second end **130**. The first end **128** of the second lip seal **126** and the second end **124** of the first lip seal **124** are disposed adjacent to each other. A third lip seal **132** extends from proximate the third edge **106** of the top surface **12** and between a first end **134** and a second end **136**. The first end **134** of the third lip seal **132** and the second end **130** of the second lip seal **126** are disposed adjacent to each other. A fourth lip seal **138** extends from proximate the fourth edge **110** of the top surface **12** and between a first end **140** and a second end **142**. The first end **140** of the fourth lip seal **138** and the second end **136** of the third lip seal **132** are disposed adjacent to each other.

[0022] The above-described lip seals **120**, **126**, **132**, **138** are positioned proximate the outer perimeter of the top surface **12** of the vacuum table **10** and may be collectively referred to as the exterior lip seals. The plurality of lip seals **14** also includes a plurality of interior lip seals to define the segments A-O with the exterior lip seals. For example, a fifth lip seal **144** extends between the fourth lip seal **138** and sixth lip seal **146** and be disposed generally parallel to, and spaced apart from, the first lip seal **120**. At least a portion of a sixth lip seal **146** may extend towards the third lip seal **132** and between the first lip seal **120** and the fifth lip seal **144**. The sixth lip seal **146** is disposed generally parallel to, and spaced apart from, the fourth lip seal **138**. The orientation of the first lip seal **120**, the fourth lip seal **138**, the fifth lip seal **144**, the sixth lip seal **146** and the top surface **12** define the first portion A. The remaining segments of segments A-O are defined in a similar manner with all or a portion of various lip seals **14**.

[0023] While a particular segmentation embodiment is shown in FIG. **1** and other drawings, it is to be appreciated that any configuration of portions may be utilized. For example, any number of portions may be included and the sizes of the portions, relative to each other, may vary. Therefore, it is to be understood that the illustrated segmentation of portions is merely an example and is not limiting of the different portion configurations which may be provided.

[0024] The vacuum table **10** is a base plate structure **16** which has an area compatible with the largest format panel to be supported by the vacuum table **10**. In some embodiments, this may be about 600 mm×600 mm or larger, with a thickness between about 20 mm and 30 mm. However, it is to be understood that the dimensions of the vacuum table **10** may vary depending on the particular objects to be supported, inspected and/or processed. The base plate structure **16** is a unitary, integrally formed plate in some embodiments, but it is possible that the base plate structure **16** is formed by a plurality of base plate structures. The top surface **12** of the base plate structure **16** may be machined or otherwise formed to be extremely flat, such as within **10** microns or less of flatness variation.

[0025] Referring now to FIGS. **2** and **3**, the lip seals **14** and the base plate structure **16** of the vacuum table **10** from which the lip seals **14** extend are shown in more detail. The lip seals **14** are mechanically secured to the base plate structure **16** in any suitable manner. In the illustrated embodiment, and by way of example, the lip seals **14** are clamped by a bracket **18** within a recessed area **20** of the base plate structure **16** and bolted to the base plate structure **16**. Alternatively, magnets may be employed to retain the lip seals **14** within the recessed areas **20**. The recessed areas **20** are troughs which extend along the base plate structure **16** and are sized and configured to receive a portion of the lip seals **14** therein. The lip seals **14** are flexible and are made of a soft, elastomeric material to be elastically deformable in some embodiments. The lip seals **14** extend upwardly out of the recessed areas **20** to protrude upwardly to an extent higher than the top surface **12** of the base plate structure **16**. The lip seals **14** may extend upwardly at a non-vertical angle (i.e., non-parallel or non-perpendicular to plane of top surface **12**). In some embodiments, the lip seals **14** extend upwardly at about 45 degrees relative to the top surface **12**, but other angles are contemplated.

[0026] As shown, the lip seals **14** intersect with each other to define rectangular portions along the top surface **12** of the base plate structure **16**. Therefore, four lip seals **14** define each portion—or format—to enclose a vacuum for the

desired space to accommodate a specific format of electronic component, as disclosed herein. Although rectangular portions A-O are illustrated and described herein, it is within the scope of the disclosure to have the lip seals **14** define exclusively non-rectangular portions or a combination of rectangular portions and non-rectangular portions. For example, some or all of the portions A-O may be parallelograms, trapezoids, rhombuses, etc. Such shapes may be utilized to accommodate support and flattening of non-rectangular shaped panels.

[0027] Each portion A-O of the vacuum table **10** includes a respective suction arrangement **22** to provide a vacuum for each particular portion. Each suction arrangement **22** includes one or more vacuum tubes **24** which are open at the top surface **12** of the base plate structure **16** and extend downwardly into the base plate structure **16**. The suction arrangements **22** are fluidly coupled to an airflow path network **26** defined within the base plate structure **16**. The airflow path network **26** comprises a plurality of interconnected channels **27** extending throughout the base plate structure **16**. The airflow path network **26** is fluidly coupled to a vacuum source (not shown). The airflow path network **26** includes valves or other fluid restricting devices which allow the vacuum for each suction arrangement **22** of each portion A-O to be selectively active or inactive. Alternatively, the vacuum for each suction arrangement **22** may be selectively controlled by providing individual vacuum sources for each suction arrangement **22**.

[0028] Referring now to FIGS. **4-6**, an example of one vacuum airflow usage is shown. In the illustrated embodiment, an electronic component **30** of a particular size and format is placed on portions H, I, K, L, N and O of the vacuum table **10**. The portions combine to form a format for the electronic component **30**. This combination illustrates that any of the portions A-O may be combined to define a combined format for a large number of other electronic component sizes. Additionally, a single portion may be utilized to support, flatten and retain other electronic components.

[0029] As discussed above, a vacuum can be selectively applied to only desired portions of the vacuum table **10**. In the case of the illustrated example, the vacuum is applied to the suction arrangements **22** for portions H, I, K, L, N and O. As shown in fluid circuit of FIG. **6**, the controlled vacuum airflow is applied to desired portions (i.e., H, I, K, L, N and O in the illustrated example), while other portions do not have a vacuum applied in the particular vacuum usage of FIGS. **4-6**.

[0030] The lip seals **14** prevent significant airflow leakage across the top surface **12** of the base plate structure **16**, as would be present if simply a flat top surface was provided in an unsegmented manner. However, as shown in FIG. **7**, a small gap **99** between edges of adjacent lip seals **14** is present in some embodiments to permit flexure during deformation of the lip seals **14** during operation. While complete sealing is not required, the lip seals **14** provide an enclosed perimeter to produce a large vacuum force to flatten the electronic component **30** in a manner which substantially evenly distributes the stresses over the entire area of the electronic component **30**. This flattening force is stronger than a clamp force and avoids the complexity and potential for damage that clamp devices pose.

[0031] In the embodiment shown in FIG. **1**, the ends of the lip seals **14** engage each other. For example, the first end **122** of the first lip seal **120** engages the second end **142** of the fourth lip seal **138**. However, in the embodiment of FIG. **7**, the ends of the lip seals are spaced apart from each other to define the gap **99**. For example, the first end **122** of the first lip seal **120** is spaced from the second end **142** of the fourth lip seal **138**. It is to be appreciated that any combination of lip seal engagement or gaps may be present. Specifically, all of the lip seal ends may be in contact in some embodiments, all of the lip seal ends may define gaps **99**, or only some of the lip seal ends may be in contact, while others define gaps **99**.

[0032] Advantageously, the lip seals **14** are located to provide a large number of possible perimeters for numerous formats of electronic components without the need to use various master plates. Additionally, as noted above, the vacuum table **10** provides effective flattening capability without the need for complex and potentially damaging clamps.

[0033] While the invention has been described in detail in connection with only a limited number of embodiments, it is to be readily understood that the invention is not limited to such disclosed embodiments. Rather, the invention can be modified to incorporate any number of variations, alterations, substitutions or equivalent arrangements not heretofore described, but which are commensurate with the spirit and scope of the invention. Additionally, while various embodiments of the invention have been described, it is to be understood that aspects of the invention may include only some of the described embodiments. Moreover, any feature, element, component or advantage of any one embodiment can be used on any of the other embodiments. Accordingly, the invention is not to be seen as limited by the foregoing description.

What is claimed is:

1. A vacuum table for supporting and flattening an electronic component, the vacuum table comprising:

a base plate structure comprising a top surface defining a plurality of suction arrangements; and

a plurality of lip seals operatively coupled to the base plate structure and extending upwardly beyond the top surface of the base plate structure, the plurality of lip seals arranged to define a plurality of portions of the vacuum table, wherein each of the plurality of portions of the vacuum table includes at least one of the plurality of suction arrangements therein.

2. The vacuum table of claim **1**, wherein each of the plurality of lip seals are partially disposed within a respective recessed area of the base plate structure.

3. The vacuum table of claim **2**, wherein the plurality of lip seals are secured to the base plate structure with a mechanical fastener in the recessed area.

4. The vacuum table of claim **2**, wherein the plurality of lip seals are secured to the base plate structure magnetically.

5. The vacuum table of claim **1**, wherein the plurality of lip seals extend upwardly at a non-perpendicular angle relative to a plane defined by the top surface of the vacuum table.

6. The vacuum table of claim **5**, wherein the plurality of lip seals extend upwardly at an angle 45 degrees relative to a plane defined by the top surface of the vacuum table.

7. The vacuum table of claim **1**, wherein the plurality of lip seals are formed of an elastomeric material.

8. The vacuum table of claim **1**, wherein each of the plurality of suction arrangements comprises a plurality of

holes extending from the top surface of the base plate structure to an airflow path network defined within the base plate structure.

9. The vacuum table of claim **8**, further comprising a plurality of valves positioned within the airflow path network to selectively control airflow to each of the plurality of suction arrangements.

10. The vacuum table of claim **1**, wherein ends of adjacent lip seals of the plurality of lip seals define a gap therebetween.

11. A vacuum table for supporting and flattening an electronic component, the vacuum table comprising:

a base plate structure comprising a top surface and defining one or more interconnected channels and a plurality of through holes, the plurality of through holes extending from the plurality of interconnected channels and through the top surface of the base plate structure, and the plurality of through holes comprising a first suction arrangement and a second suction arrangement fluidly connected by the one or more interconnected channels;

a first valve positioned in the one or more interconnected channels, the first valve configured to selectively control airflow from the first suction arrangement to the second suction arrangement; and

a plurality of lip seals coupled to the top surface and arranged to create a plurality of portions of the vacuum table, the first suction arrangement extending into a first portion of the plurality of portions, and the second suction arrangement extending into a second portion of the plurality of portions.

12. The vacuum table of claim **11**, wherein each of the plurality of lip seals are partially disposed within a respective recessed area of the base plate structure.

13. The vacuum table of claim **12**, wherein the plurality of lip seals are secured to the base plate structure with a mechanical fastener in the recessed area.

14. The vacuum table of claim **13**, wherein the plurality of lip seals are secured to the base plate structure magnetically.

15. The vacuum table of claim **14**, wherein the plurality of lip seals extend upwardly at a non-perpendicular angle relative to a plane defined by the top surface of the vacuum table.

16. The vacuum table of claim **15**, wherein the plurality of lip seals extend upwardly at an angle 45 degrees relative to a plane defined by the top surface of the vacuum table.

17. The vacuum table of claim **16**, wherein the plurality of lip seals are formed of an elastomeric material.

18. The vacuum table of claim **11**, wherein ends of adjacent lip seals of the plurality of lip seals define a gap therebetween.

* * * * *