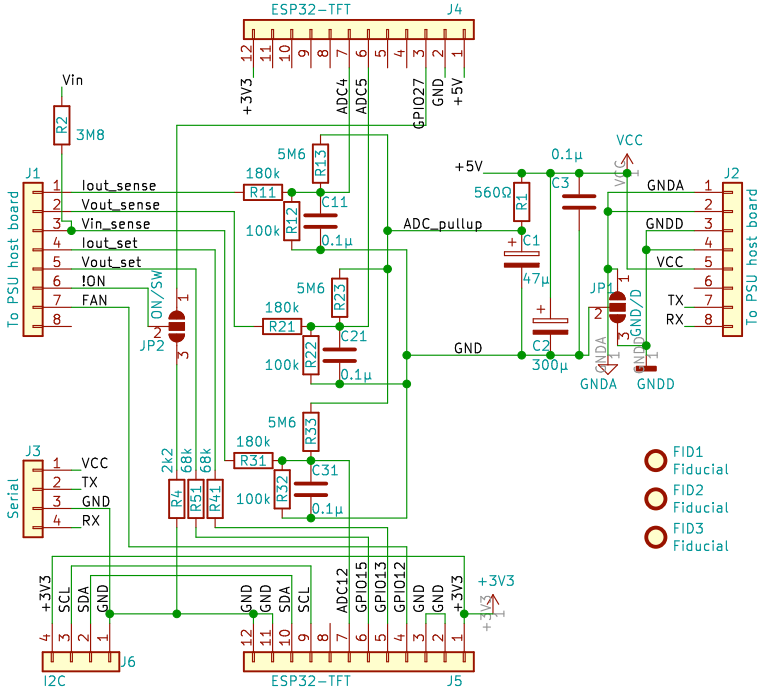

VCC = +5Vdc

Sheet: /
File: JunketOnSteroidsTTGO.sch

Title: Drok/Junket-on-steroids

Size: User	Date: 2021-03-19	Rev: 0.2
KiCad E.D.A. kicad (5.1.6-0-10_14)		Id: 1/1