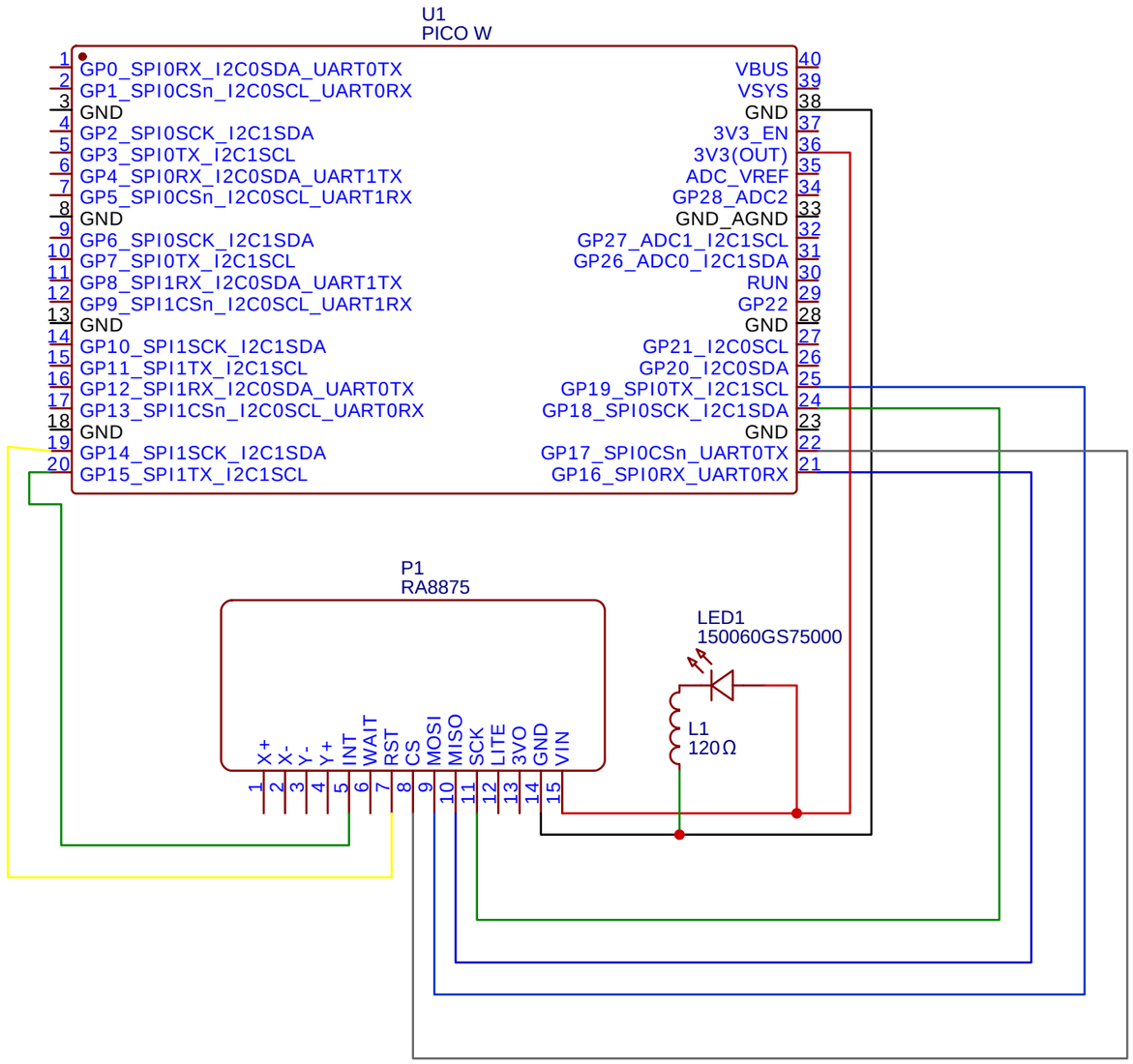

TITLE: CodexScope		REV: 1.0
EasyEDA	Company: N/A	Sheet: 1/1
	Date: 2024-04-23 Drawn By: Adam Haq	