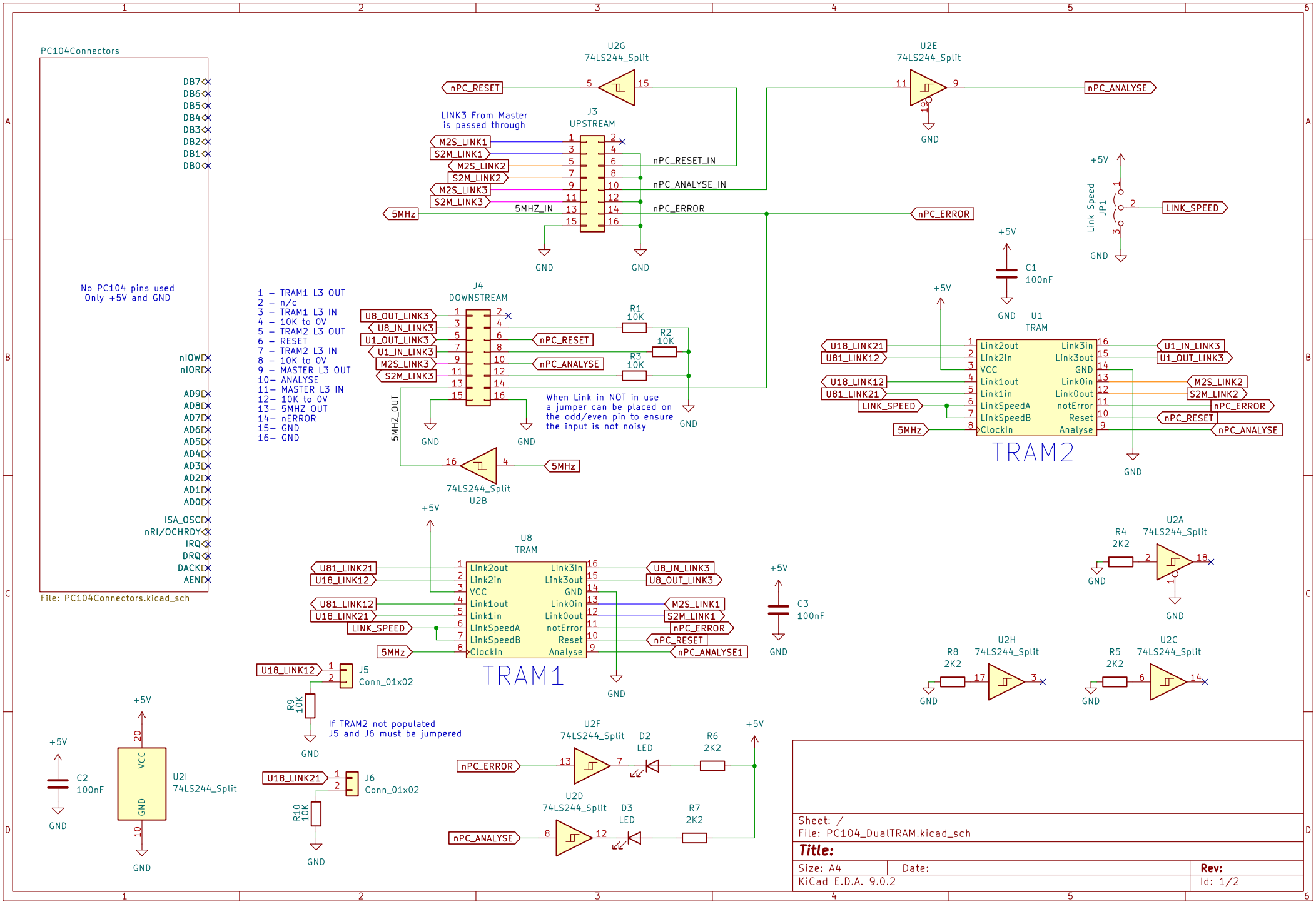
PC104Connectors
DB7
DB6
DB5
DB4
DB3
DB2
DB1
DB0
No PC104 pins used
Only +5V and GND
nIOWD
nIORD
AD9D
AD8D
AD7D
AD6D
AD5D
AD4D
AD3D
AD2D
AD1D
AD0D
ISA_OSCD
nRI/OCHRDY
IRQ
DRQ
DACKD
AEND
File: PC104Connectors.kicad_sch
U2G
74LS244_Split
nPC_RESET
LINK3 From Master
is passed through
J3
UPSTREAM
M2S_LINK1
S2M_LINK1
M2S_LINK2
S2M_LINK2
M2S_LINK3
S2M_LINK3
5MHz
5MHZ_IN
nPC_RESET_IN
nPC_ANALYSE_IN
nPC_ERROR
GND
U2E
74LS244_Split
nPC_ANALYSE
+5V
Link Speed
JP1
LINK_SPEED
C1
100nF
U1
TRAM
TRAM2
Link2out
Link2in
VCC
Link1out
Link1in
LinkSpeedA
LinkSpeedB
ClockIn
Link3in
Link3out
GND
Link0in
Link0out
notError
Reset
Analyse
U18_LINK21
U81_LINK12
U18_LINK12
U81_LINK21
U1_IN_LINK3
U1_OUT_LINK3
M2S_LINK2
S2M_LINK2
nPC_ERROR
nPC_RESET
nPC_ANALYSE
J4
DOWNSTREAM
U8_OUT_LINK3
U8_IN_LINK3
U1_OUT_LINK3
U1_IN_LINK3
M2S_LINK3
S2M_LINK3
R1
10K
R2
10K
R3
10K
1 – TRAM1 L3 OUT
2 – n/c
3 – TRAM1 L3 IN
4 – 10K to 0V
5 – TRAM2 L3 OUT
6 – RESET
7 – TRAM2 L3 IN
8 – 10K to 0V
9 – MASTER L3 OUT
10– ANALYSE
11– MASTER L3 IN
12– 10K to 0V
13– 5MHZ OUT
14– nERROR
15– GND
16– GND
When Link in NOT in use
a jumper can be placed on
the odd/even pin to ensure
the input is not noisy
5MHZ_OUT
74LS244_Split
U2B
U8
TRAM
TRAM1
U81_LINK21
U18_LINK12
U81_LINK12
U18_LINK21
LINK_SPEED
5MHz
U8_IN_LINK3
U8_OUT_LINK3
M2S_LINK1
S2M_LINK1
nPC_ERROR
nPC_RESET
nPC_ANALYSE1
C3
100nF
R4
2K2
U2A
74LS244_Split
U18_LINK12
J5
Conn_01x02
R9
10K
If TRAM2 not populated
J5 and J6 must be jumpered
U18_LINK21
J6
Conn_01x02
R10
10K
C2
100nF
U2I
74LS244_Split
VCC
GND
U2H
74LS244_Split
R8
2K2
R5
2K2
U2C
74LS244_Split
U2F
74LS244_Split
D2
LED
R6
2K2
U2D
74LS244_Split
D3
LED
R7
2K2
nPC_ANALYSE
Sheet: /
File: PC104_DualTRAM.kicad_sch
Title:
Size: A4
Date:
Rev:
KiCad E.D.A. 9.0.2
Id: 1/2

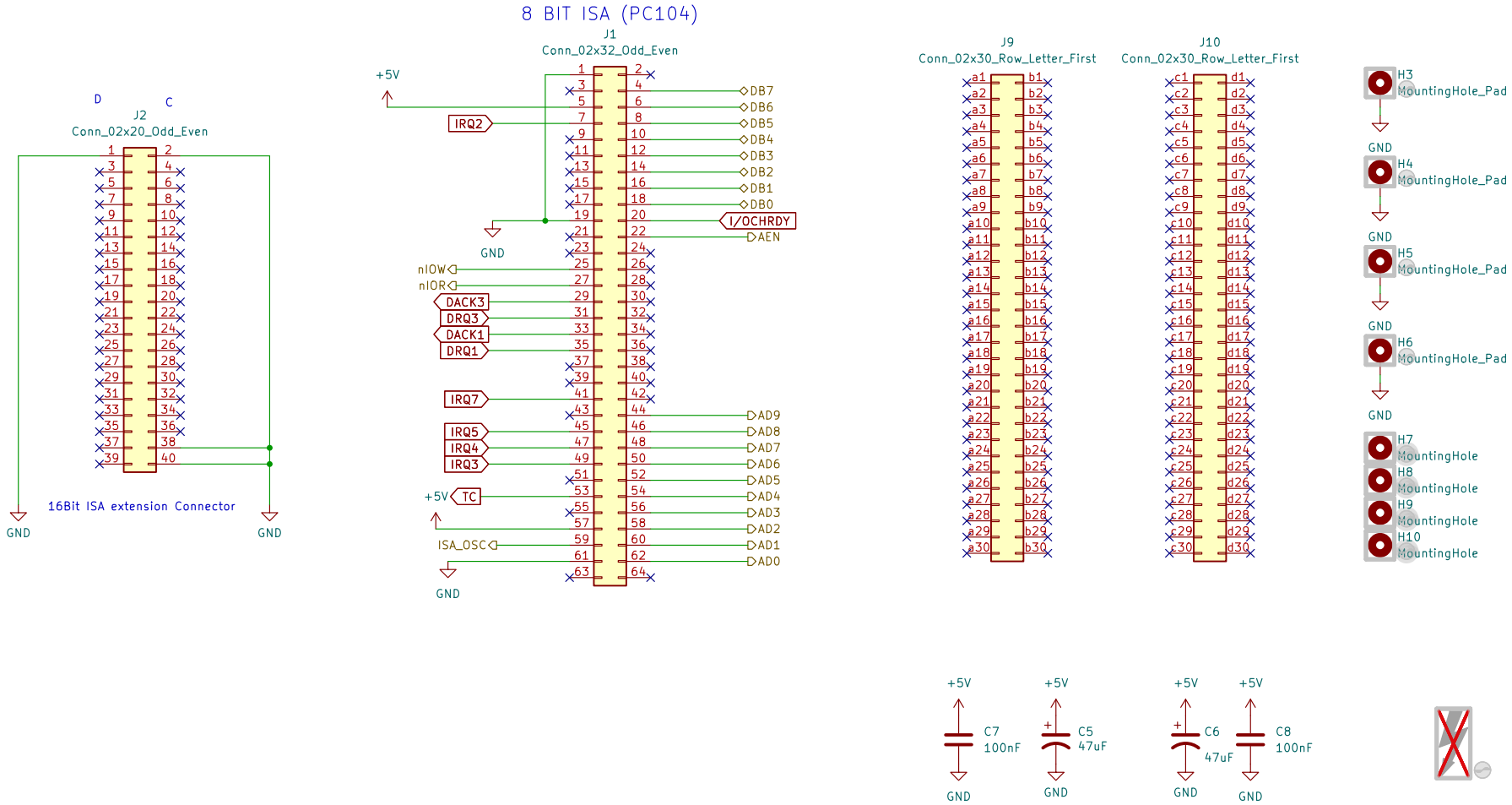

Sheet: /PC104Connectors/
File: PC104Connectors.kicad_sch

Title:

Size: A4	Date:	Rev:
KiCad E.D.A. 9.0.2		Id: 2/2