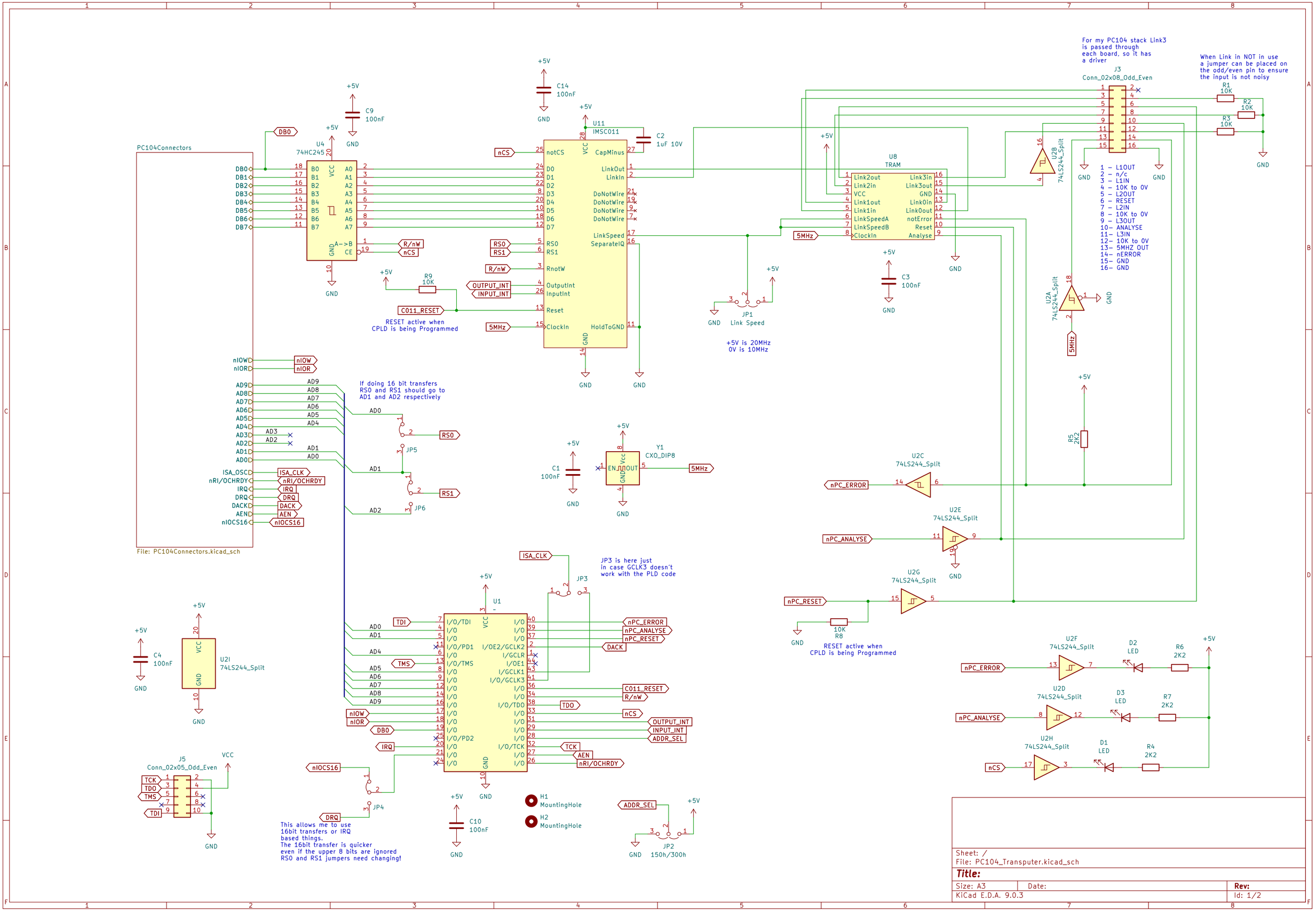
PC104Connectors
File: PC104Connectors.kicad_sch
U4
74HC245
U11
IMSC011
U8
TRAM
U1
U2I
74LS244_Split
U2A
U2B
U2C
U2D
U2E
U2F
U2G
U2H
J3
Conn_02x08_Odd_Even
J5
Conn_02x05_Odd_Even
Y1
CXO_DIP8
JP1
Link Speed
+5V is 20MHz
0V is 10MHz
JP2
150h/300h
JP3 is here just
in case GCLK3 doesn't
work with the PLD code
JP4
This allows me to use
16bit transfers or IRQ
based things.
The 16bit transfer is quicker
even if the upper 8 bits are ignored
RS0 and RS1 jumpers need changing!
JP5
JP6
If doing 16 bit transfers
RS0 and RS1 should go to
AD1 and AD2 respectively
RESET active when
CPLD is being Programmed
For my PC104 stack Link3
is passed through
each board, so it has
a driver
When Link in NOT in use
a jumper can be placed on
the odd/even pin to ensure
the input is not noisy
1 – L1OUT
2 – n/c
3 – L1IN
4 – 10K to 0V
5 – L2OUT
6 – RESET
7 – L2IN
8 – 10K to 0V
9 – L3OUT
10– ANALYSE
11– L3IN
12– 10K to 0V
13– 5MHZ OUT
14– nERROR
15– GND
16– GND
H1
MountingHole
H2
MountingHole
Sheet: /
File: PC104_Transputer.kicad_sch
Title:
Size: A3
Date:
Rev:
KiCad E.D.A. 9.0.3
Id: 1/2

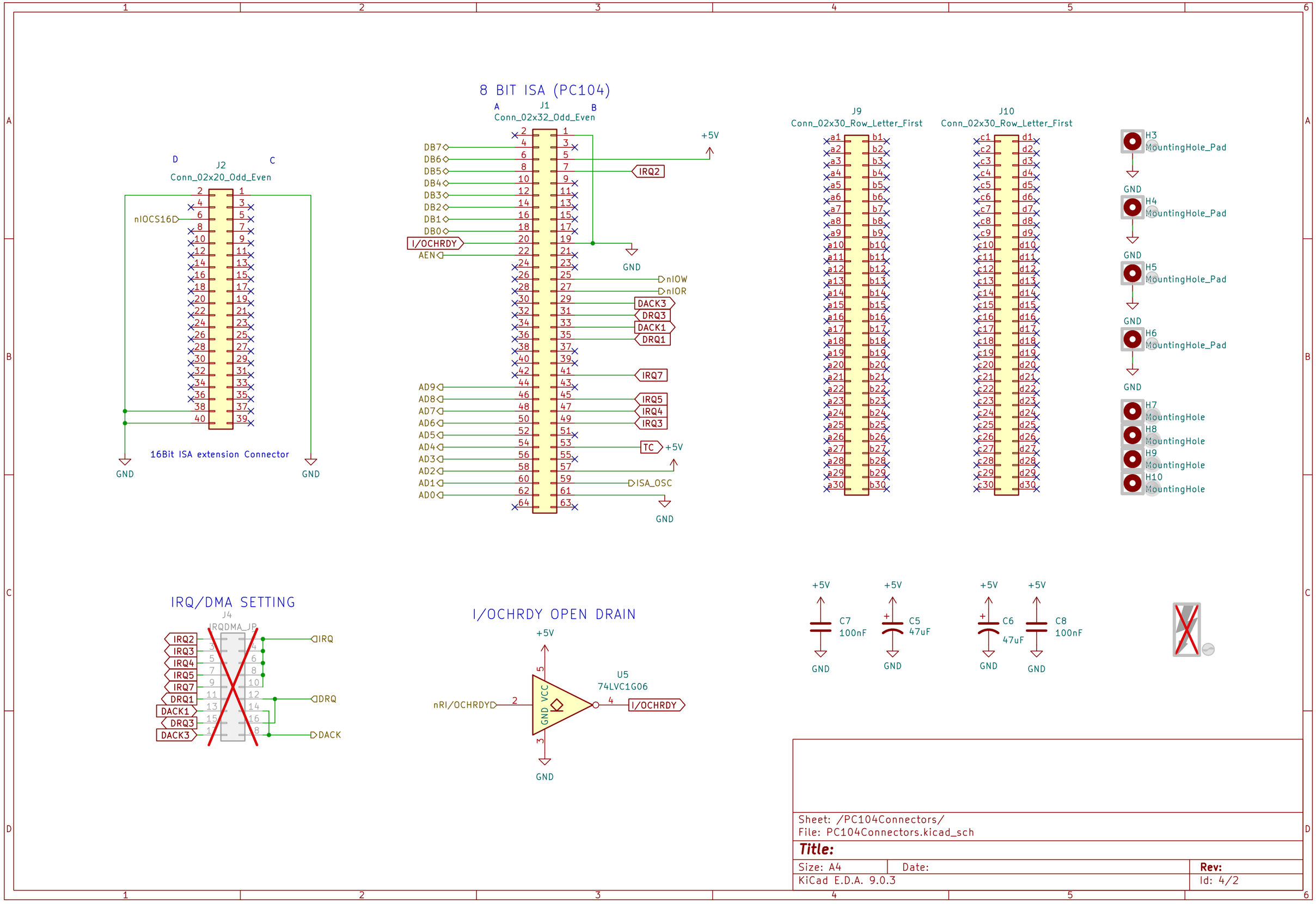

Sheet: /PC104Connectors/
File: PC104Connectors.kicad_sch

Title:

Size: A4	Date:	Rev:
KiCad E.D.A. 9.0.3		Id: 4/2