RoboChampions Construction guide

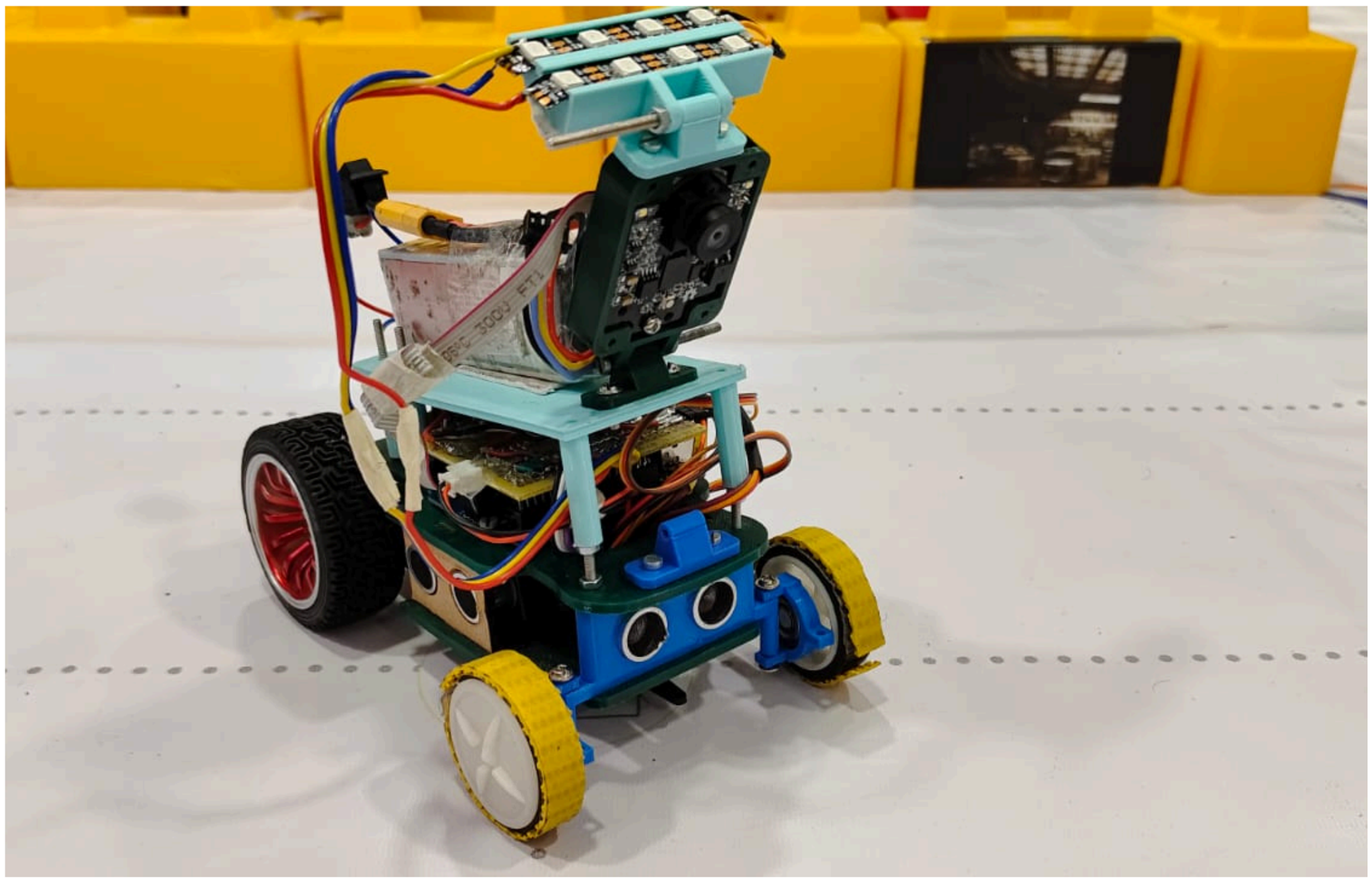

Build Guide

Part A

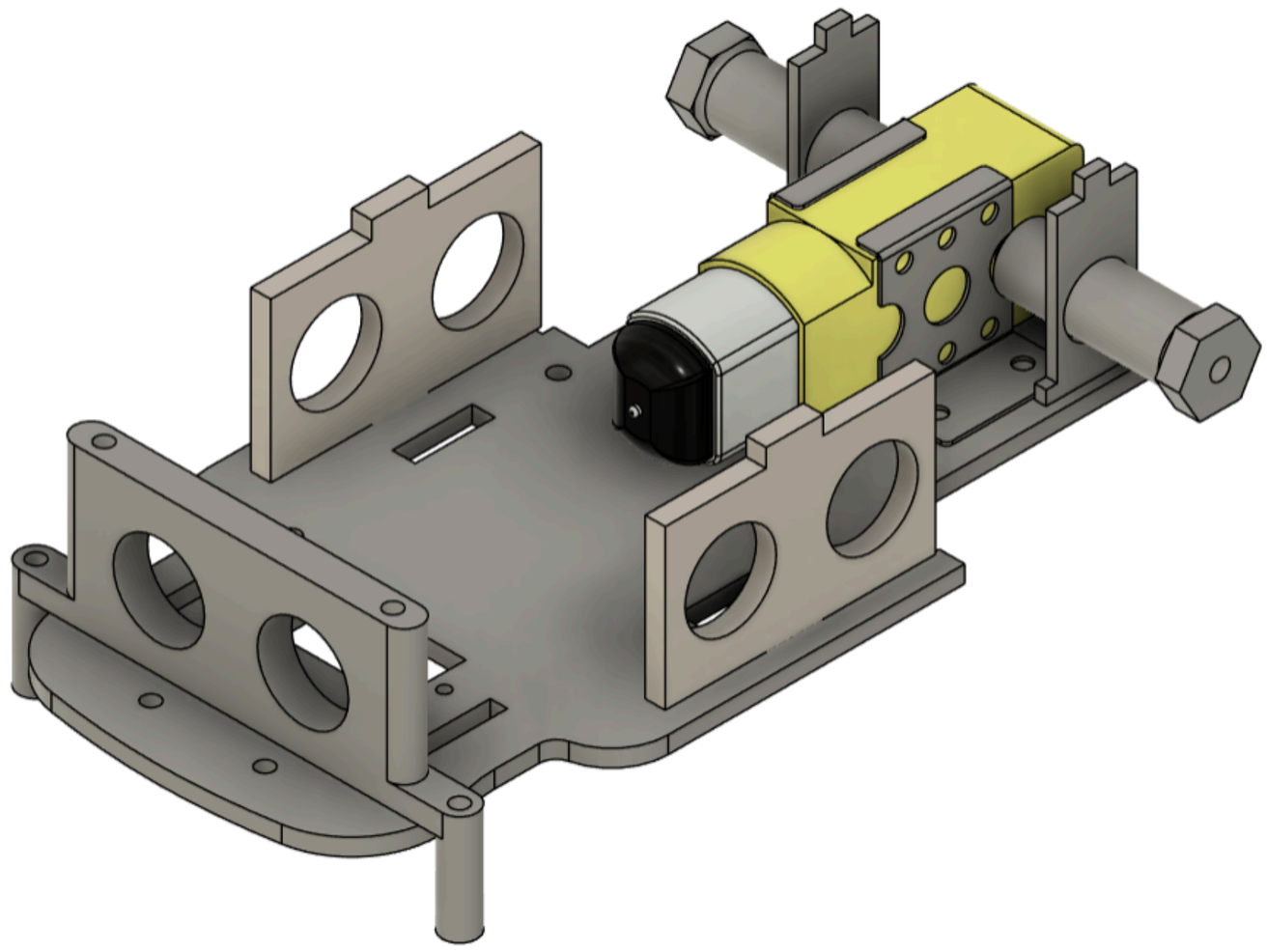

1)

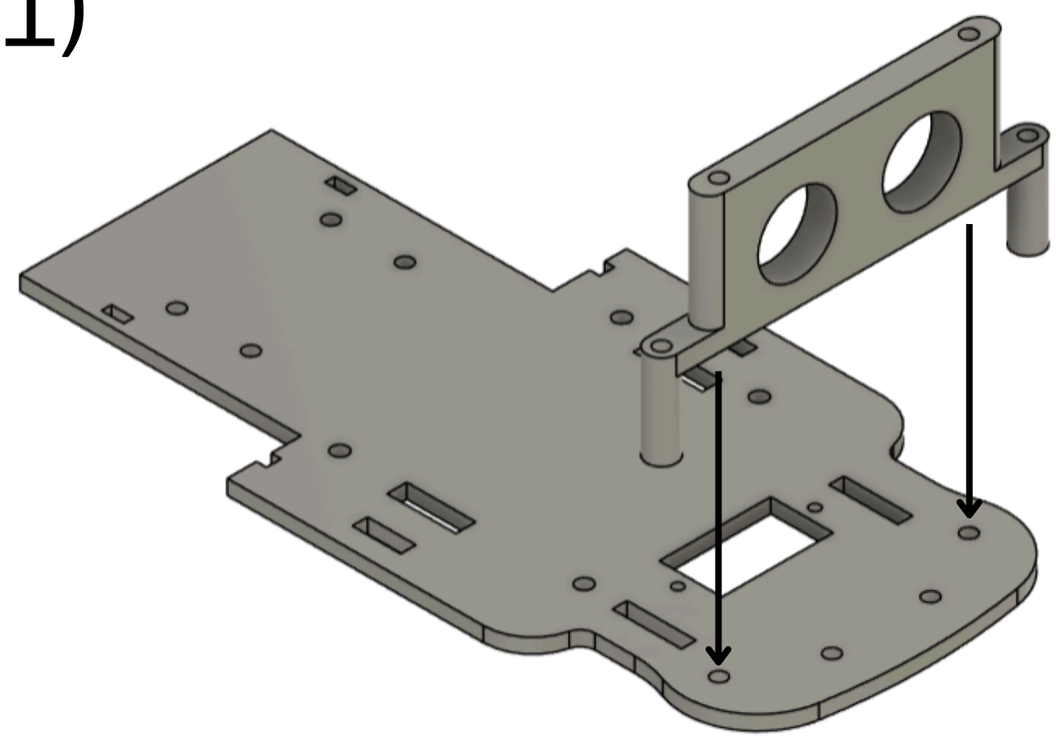

2)

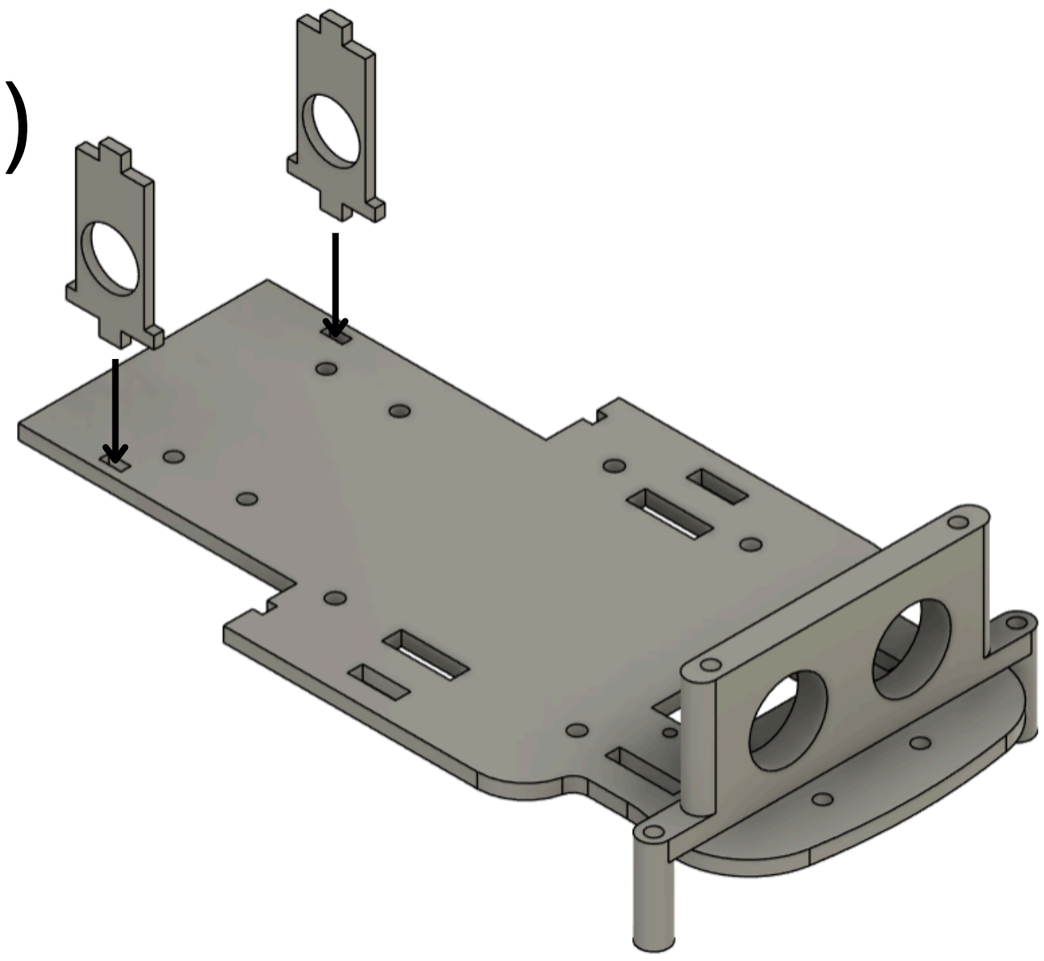

3)

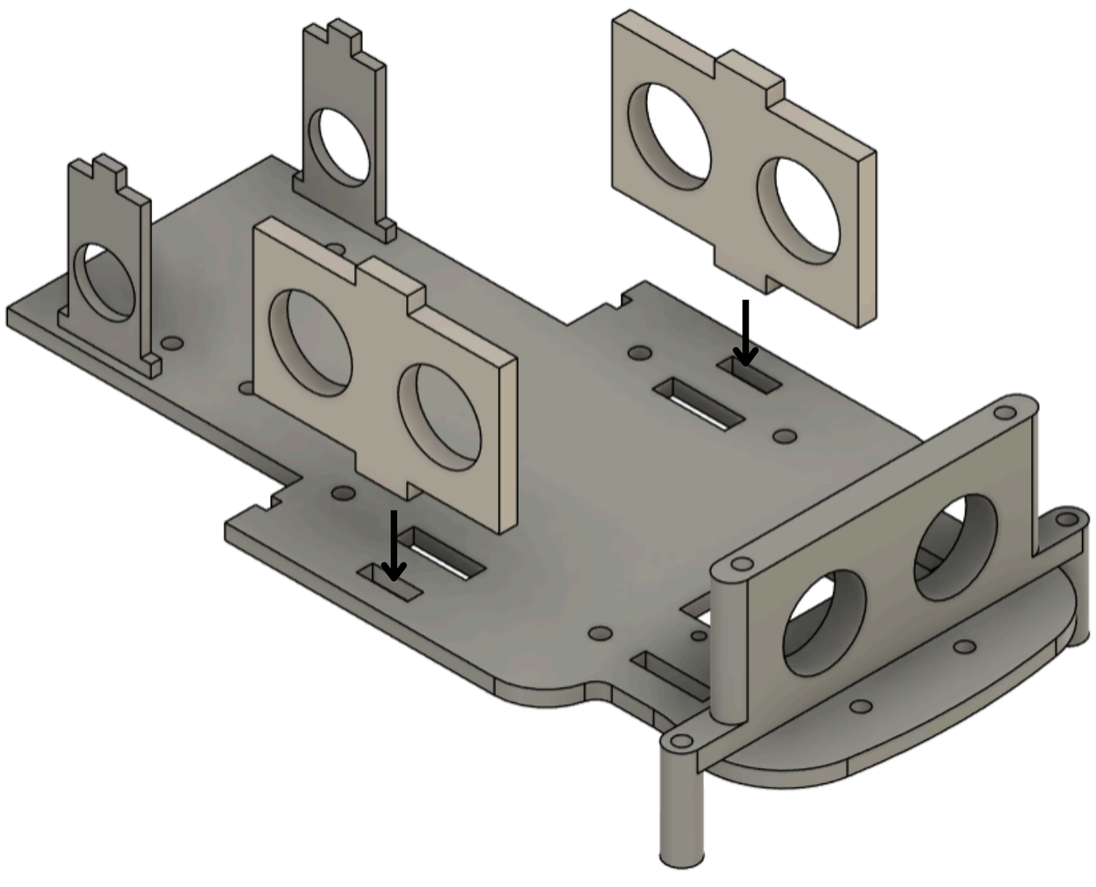

4)

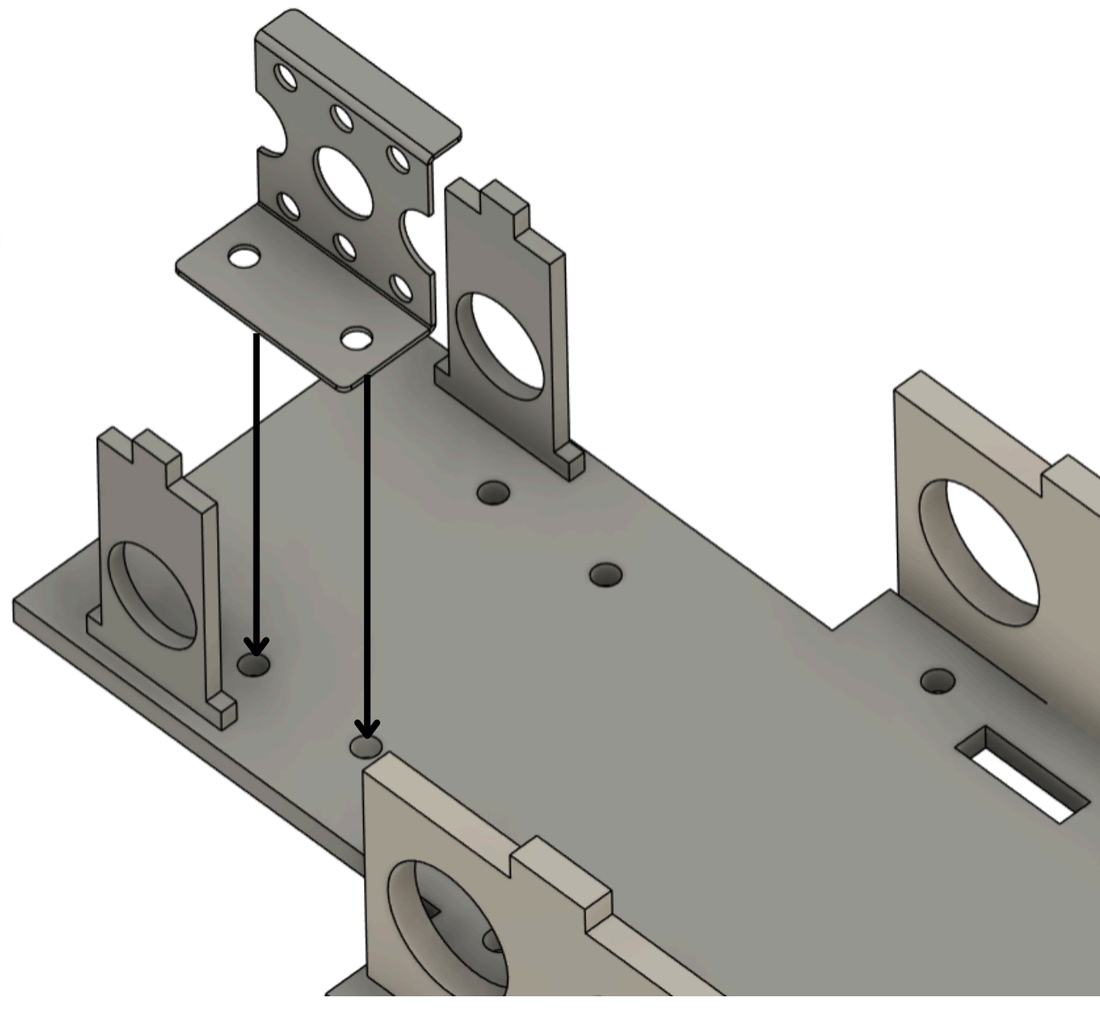

5)

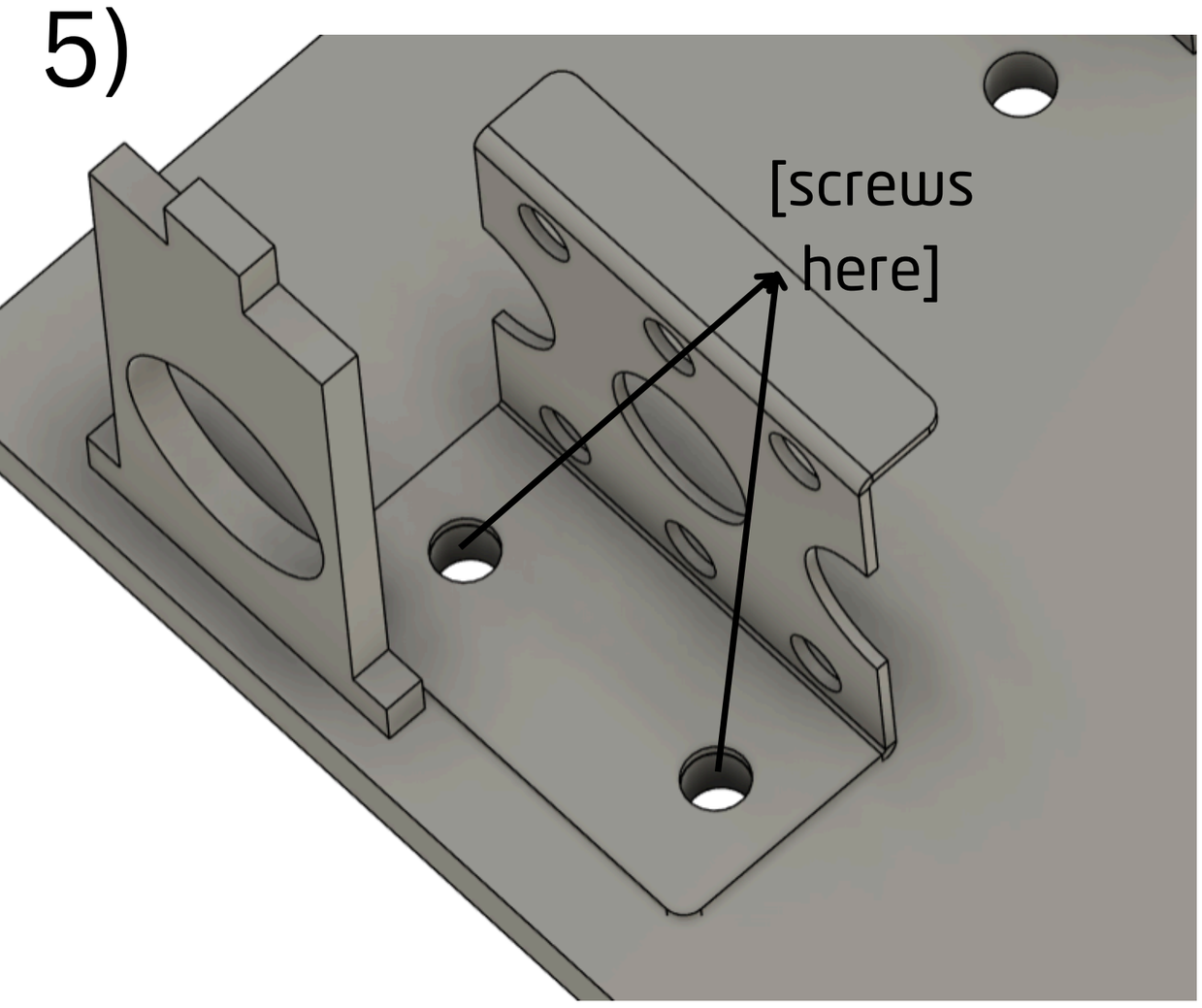

6)

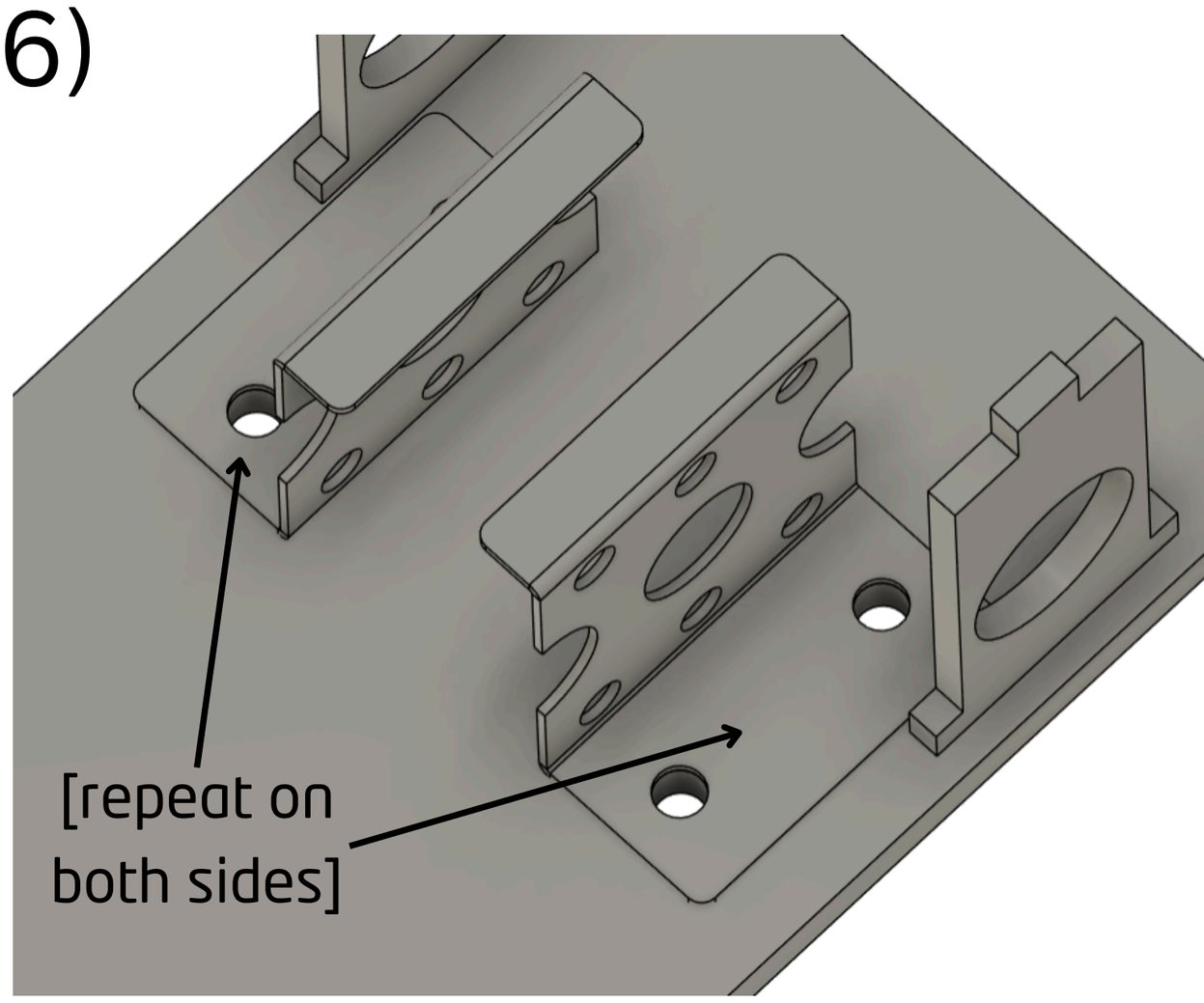

7)

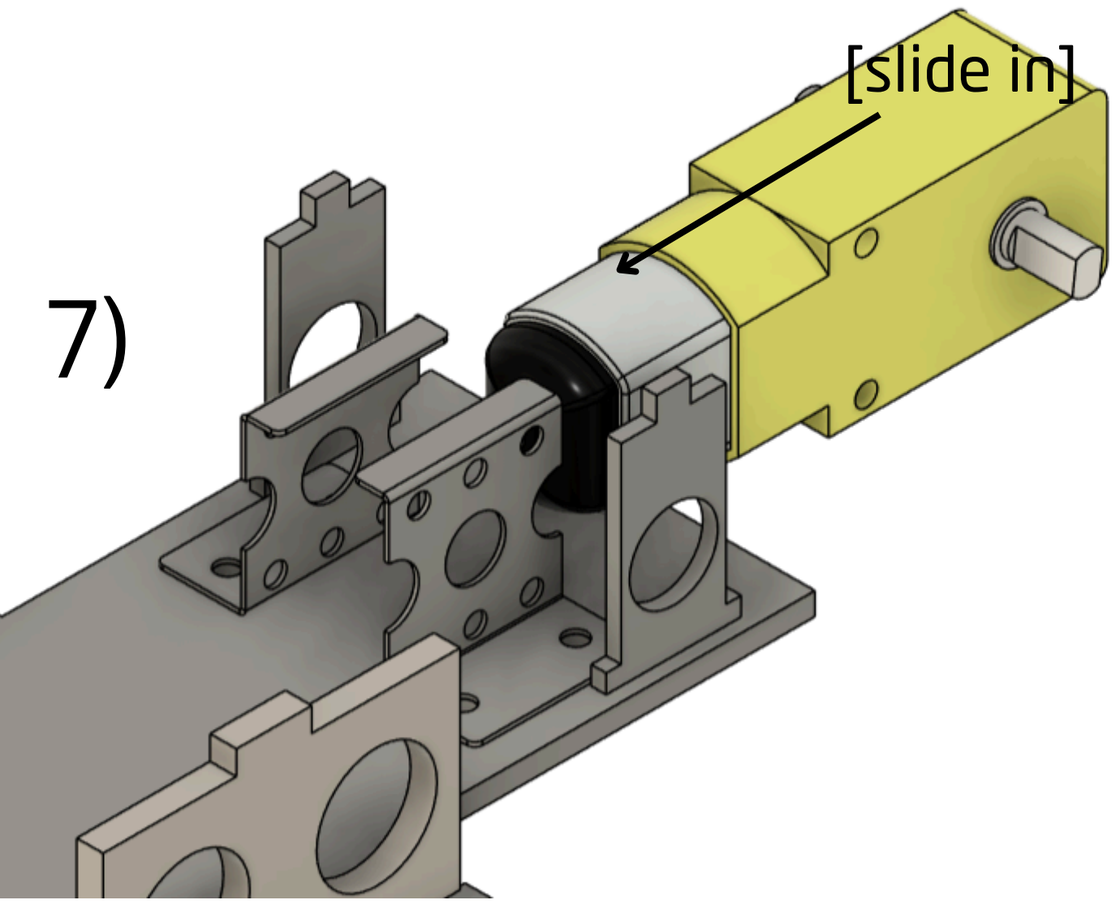

8)

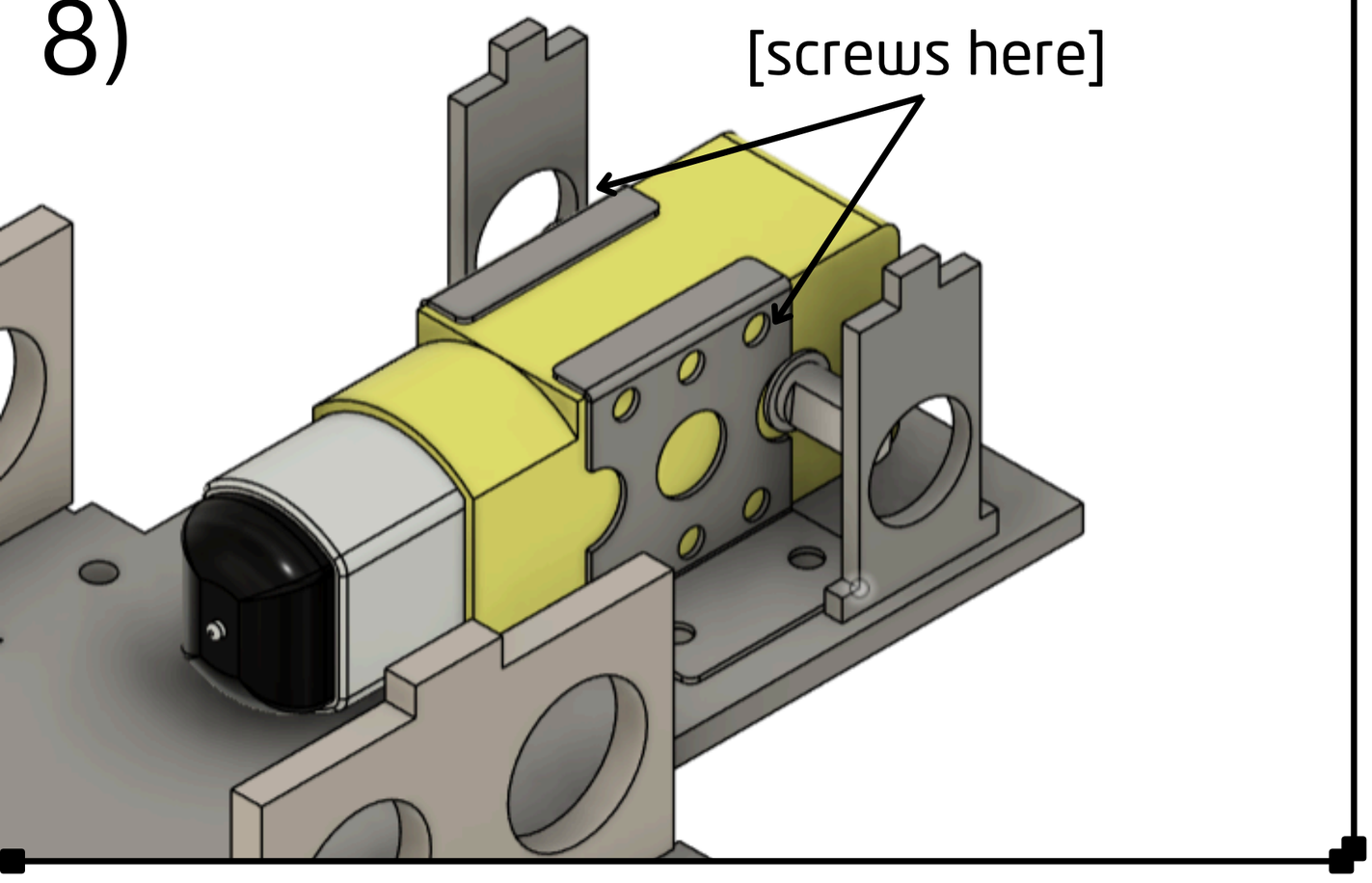

Alignment:

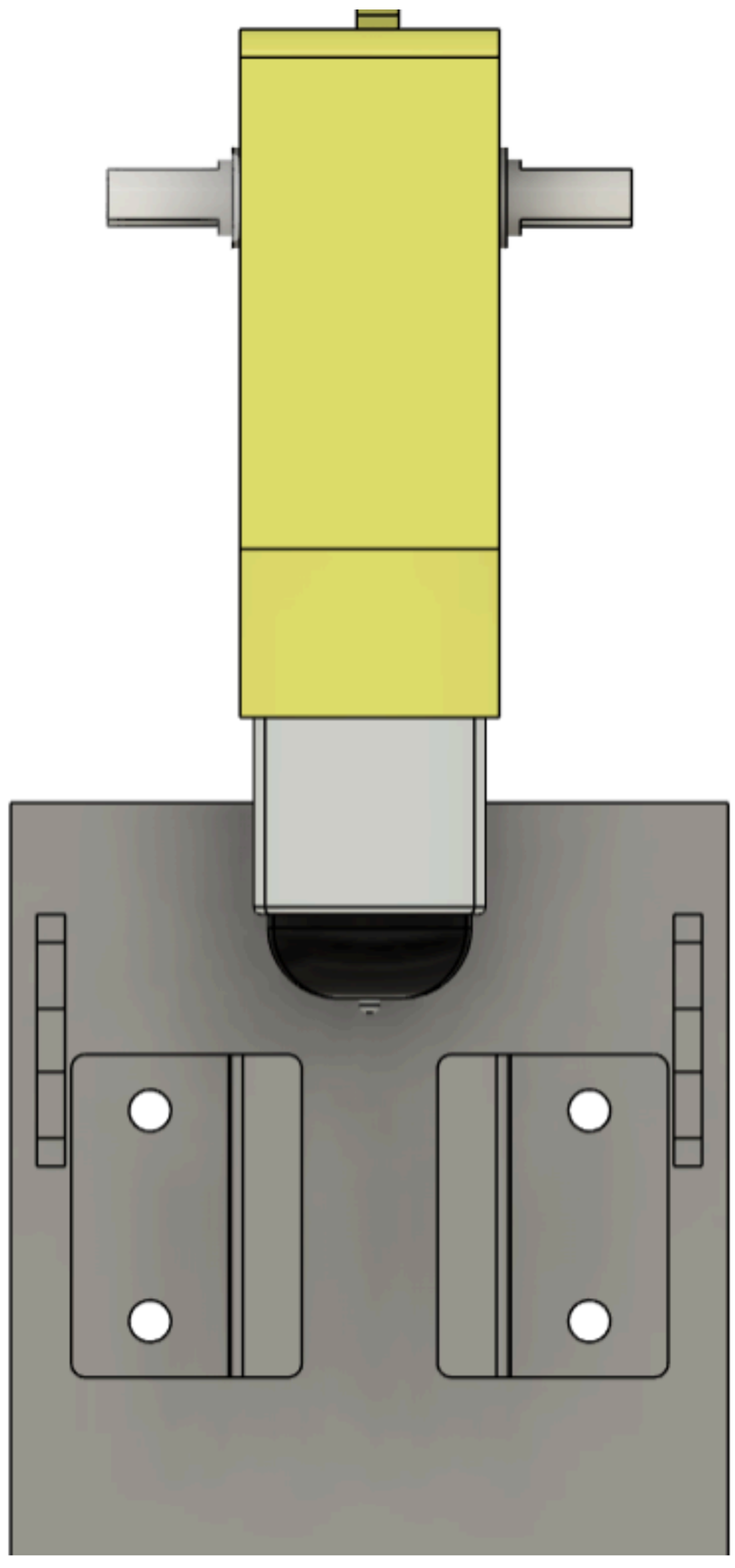

[Detached Top view]

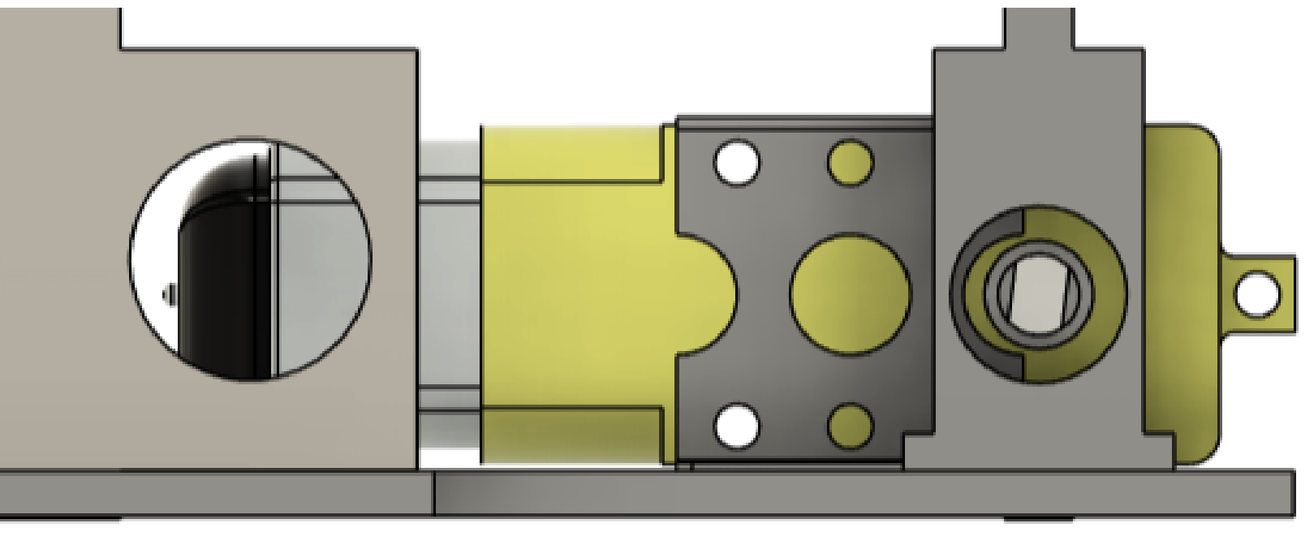

[Attached Side view]

9)

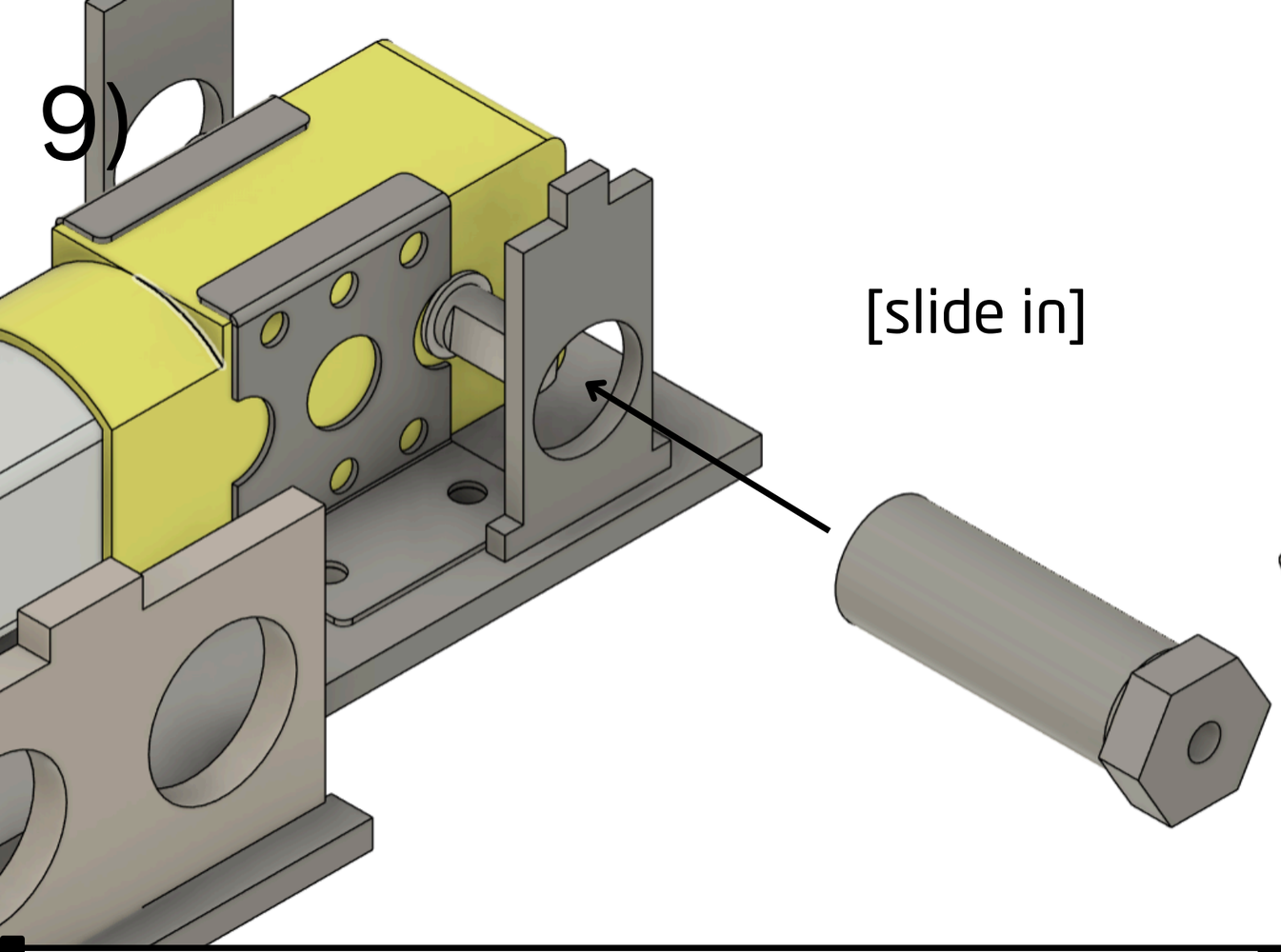

10)

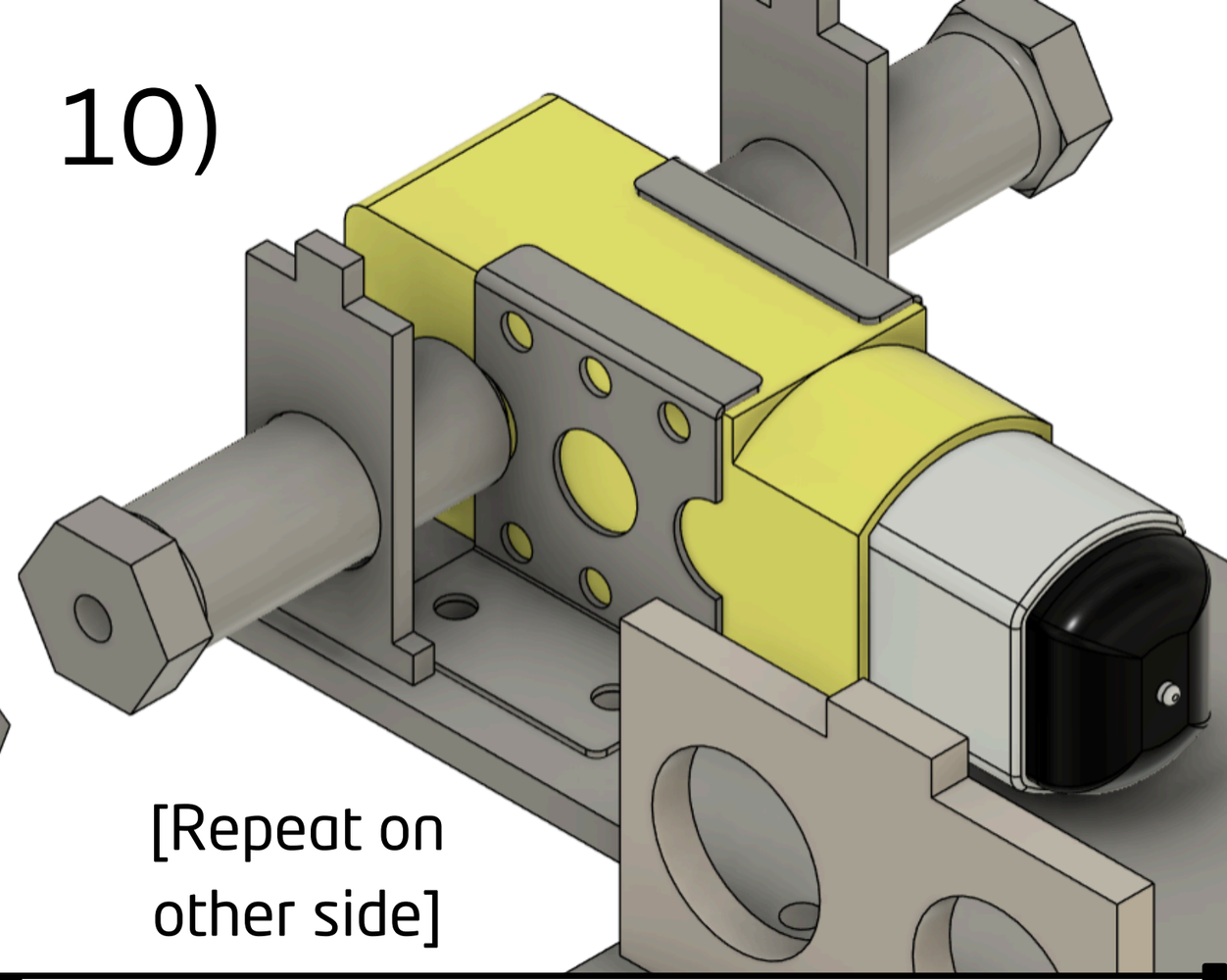

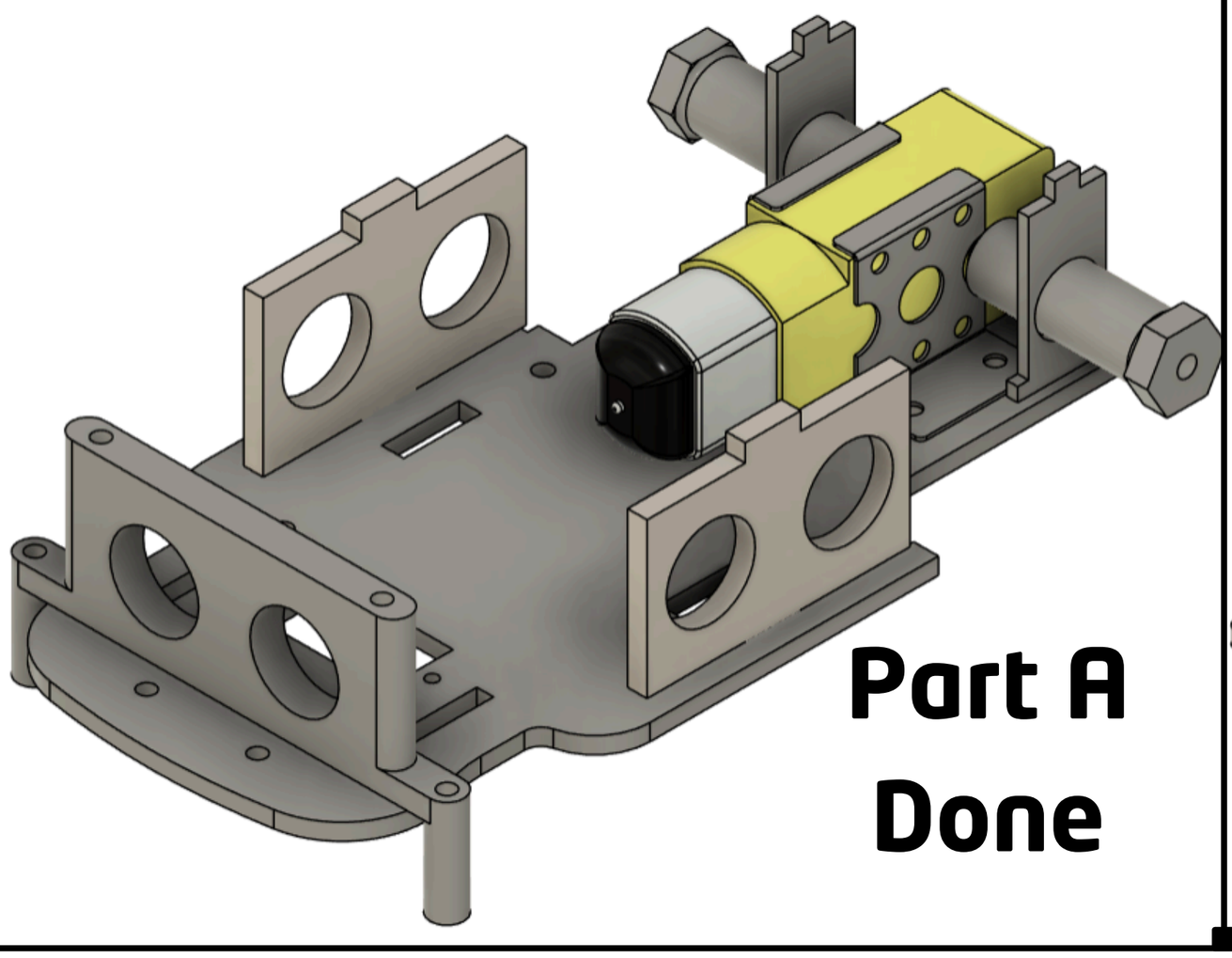

Part A

Done

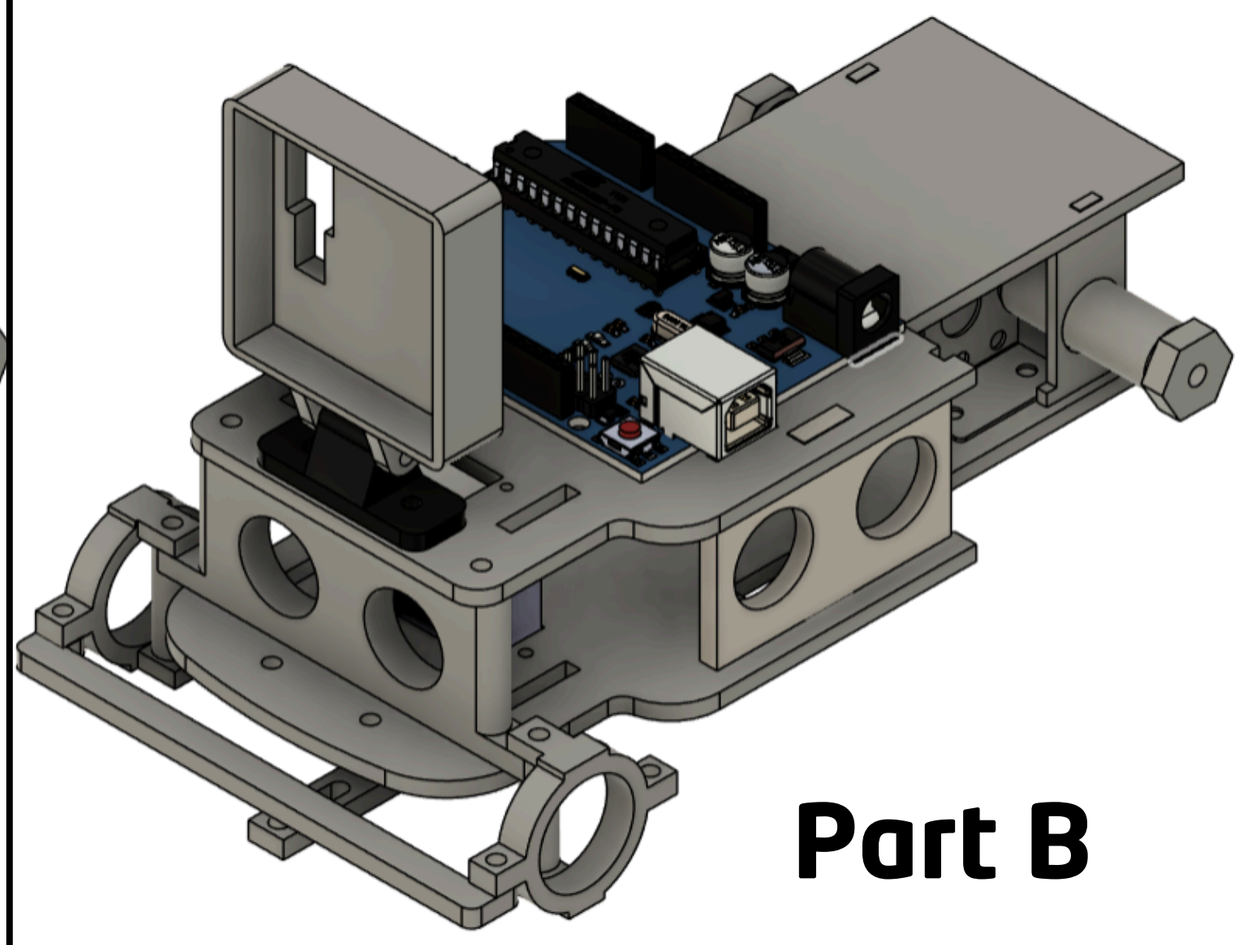

Part B

Steering [Part 1B]

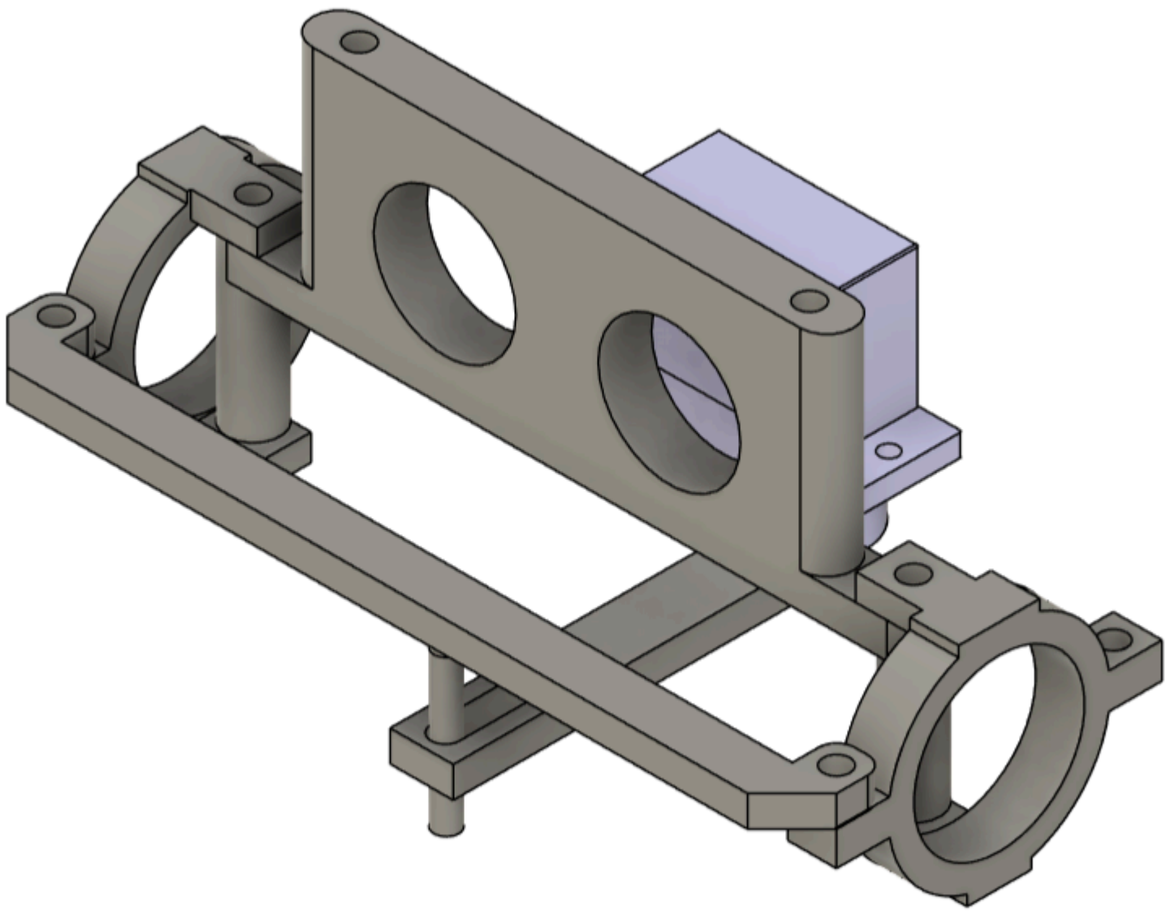

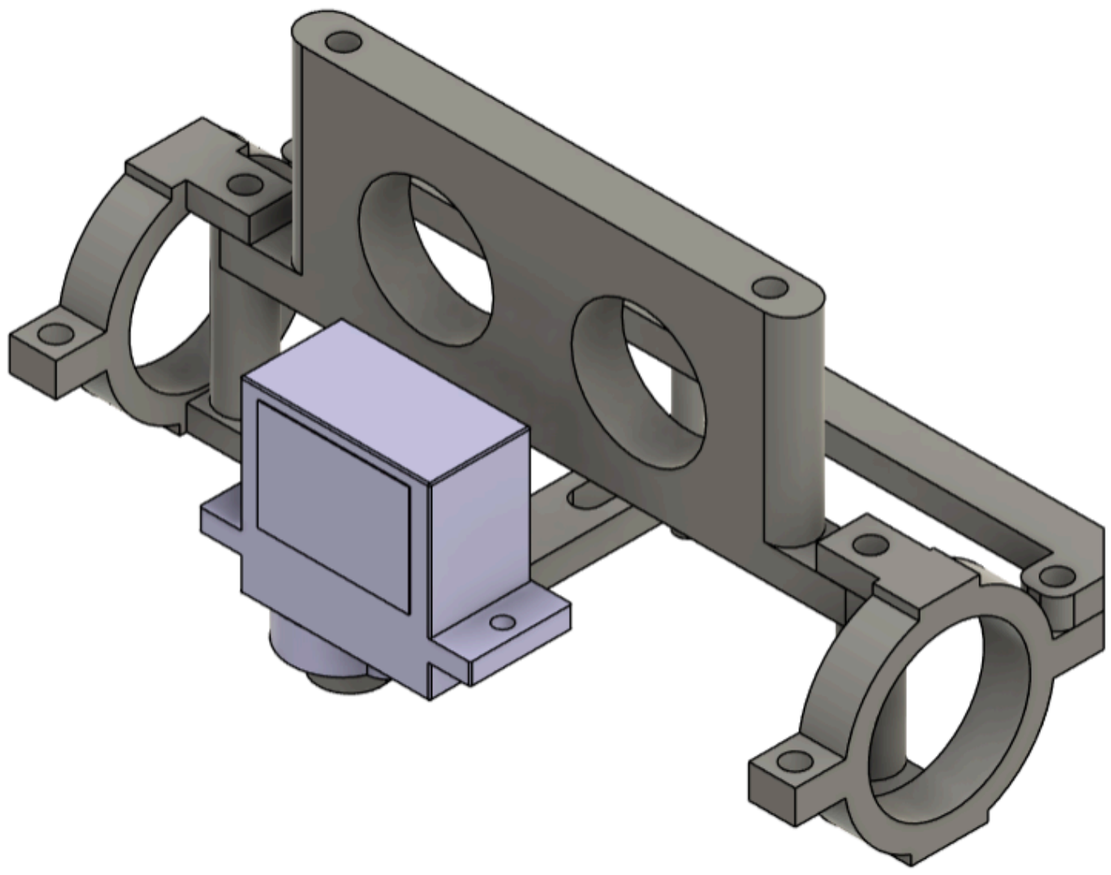

1)

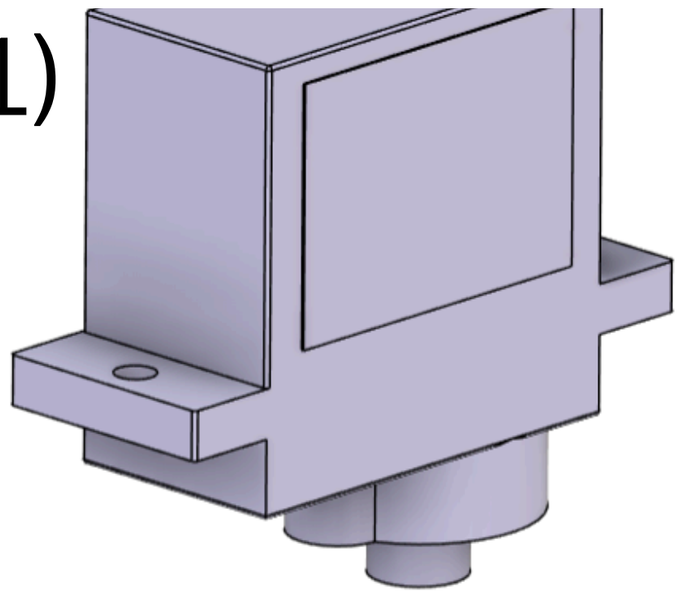

[Push-fit]

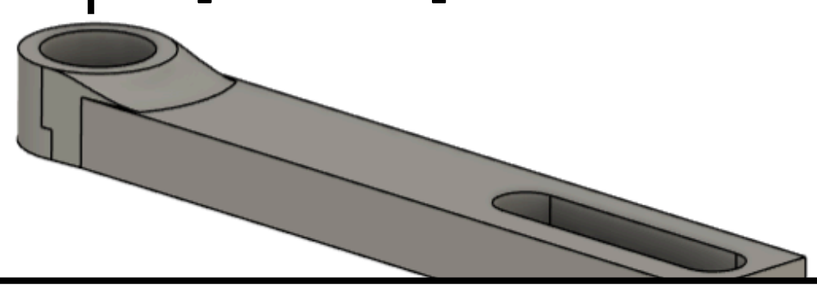

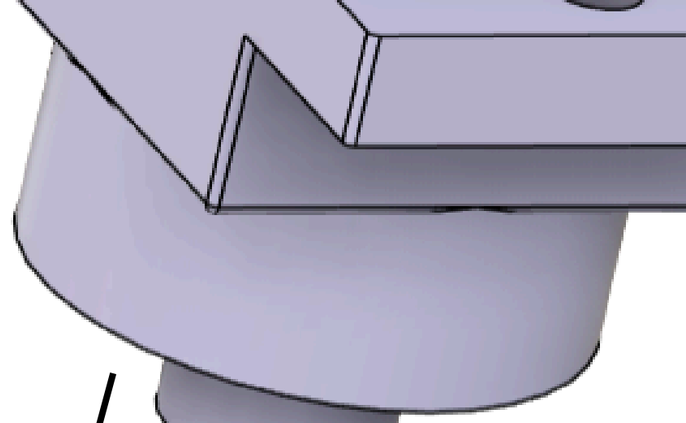

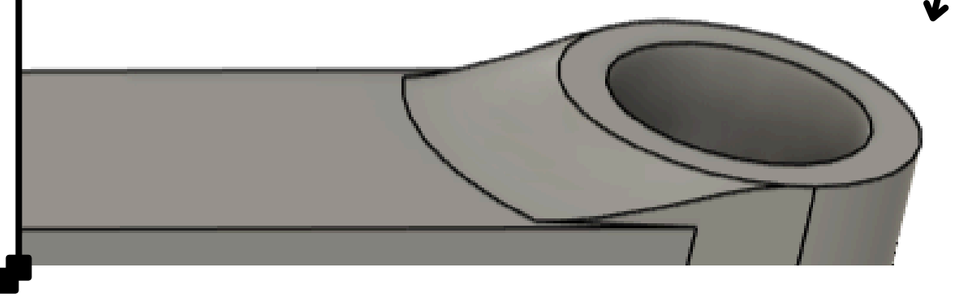

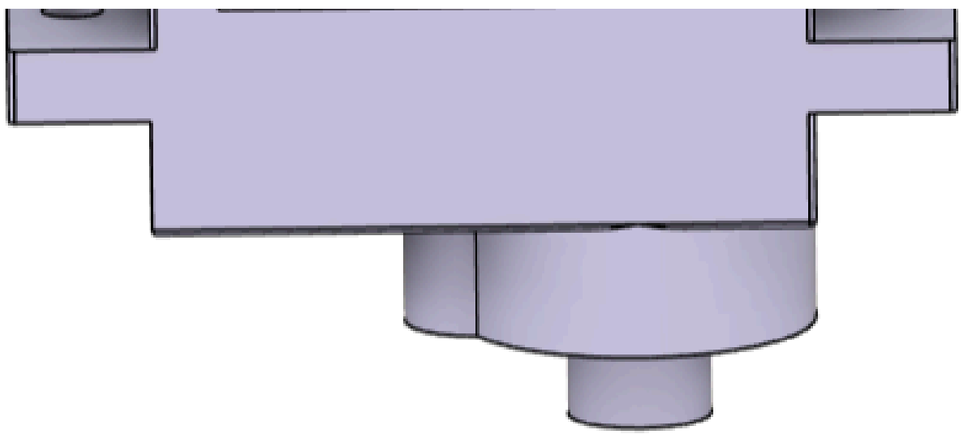

Alignment Images

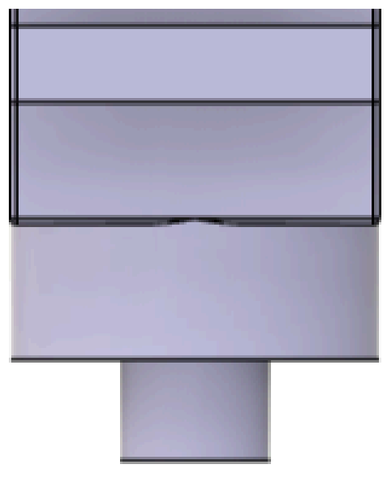

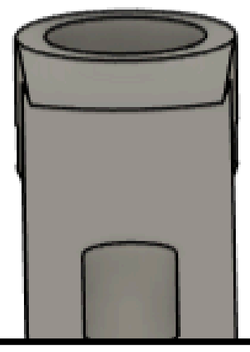

2)

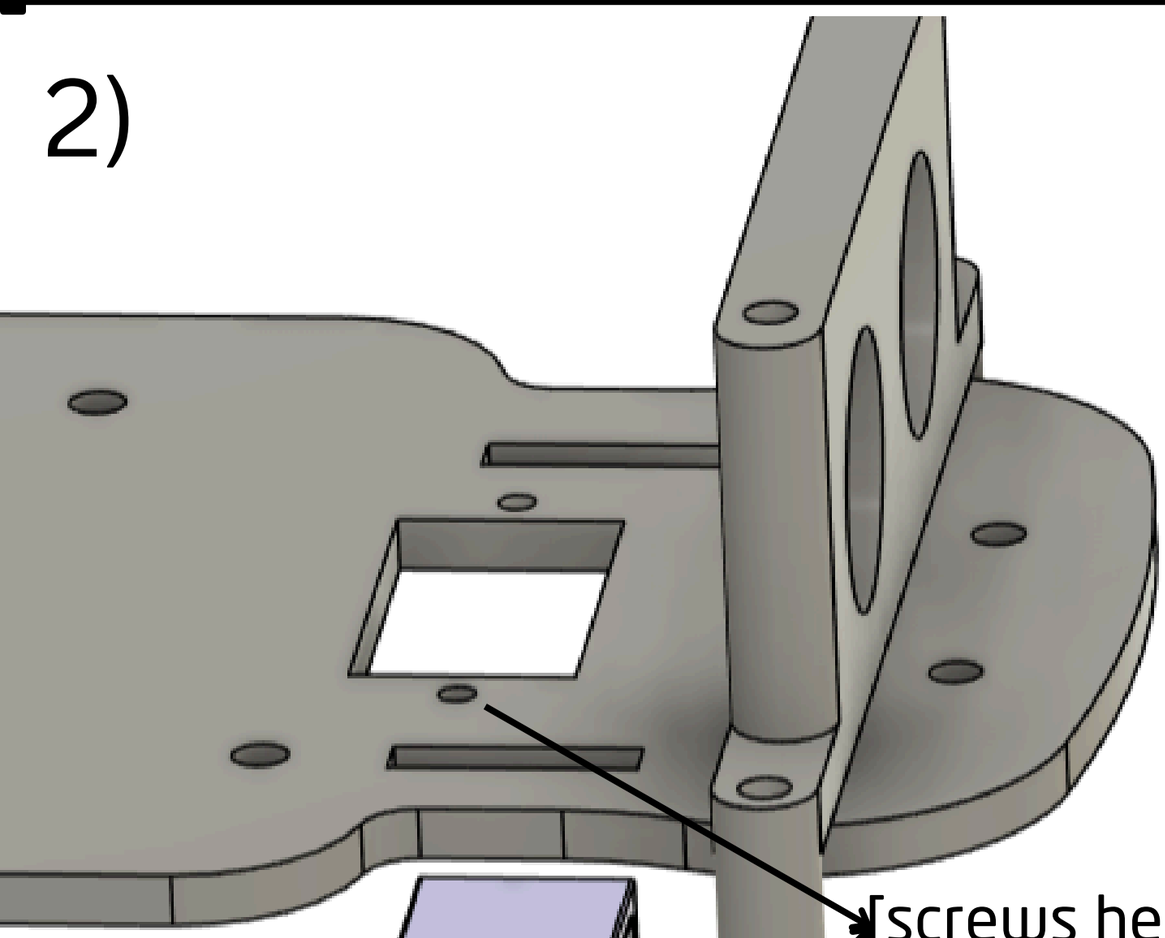

[screws here]

[slide in]

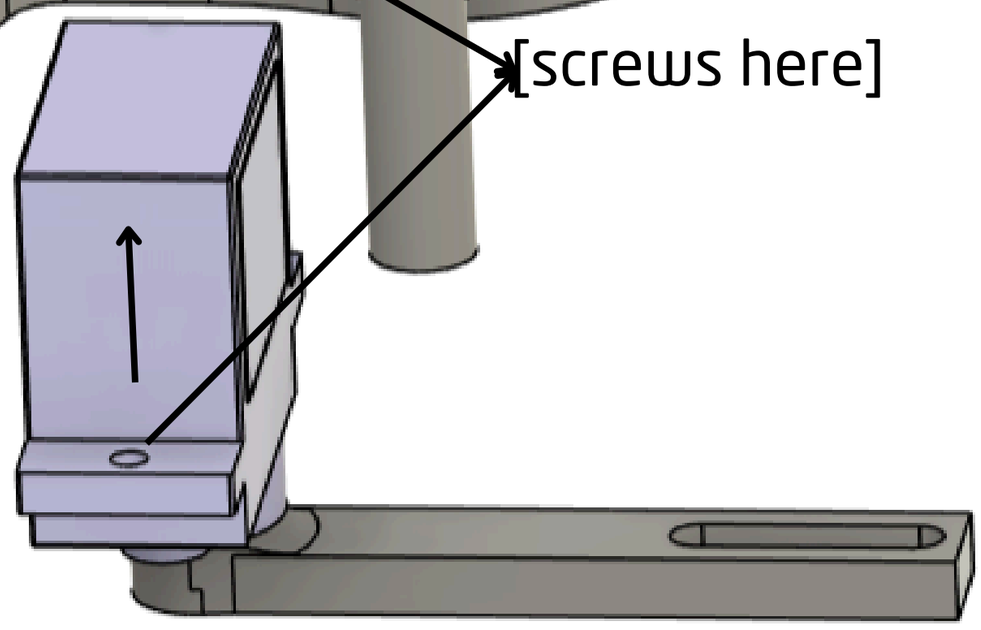

Alignment Image

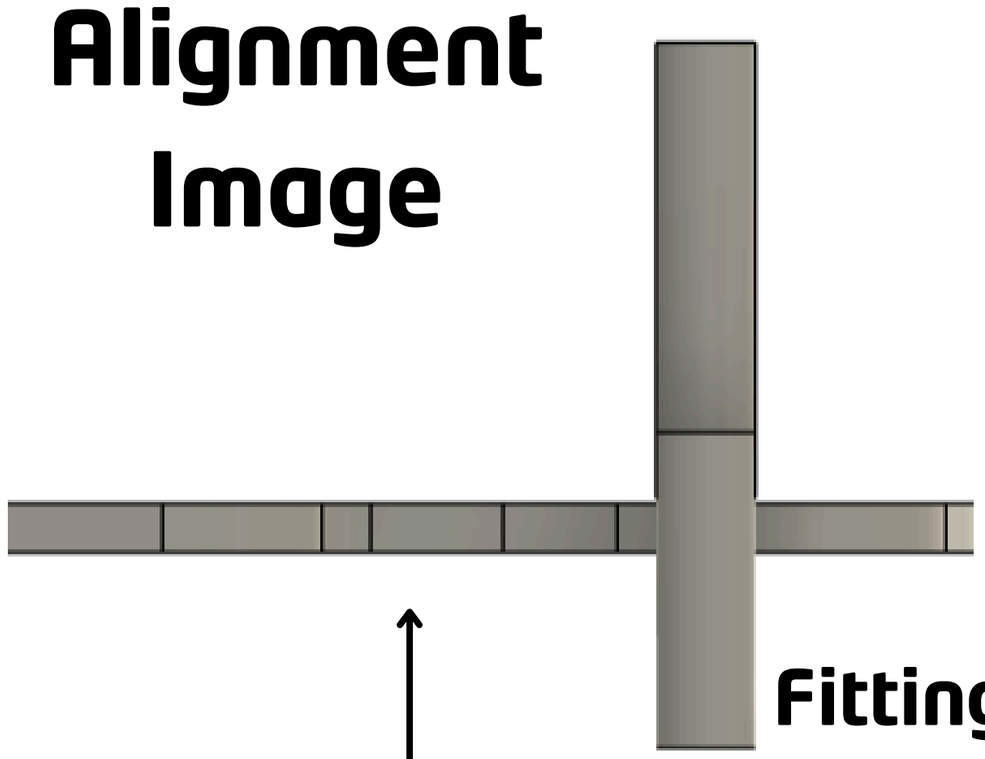

Fitting Info

screws can be used for the linkage, make sure not to make the screw here too tight, as it would be harder to make a turn

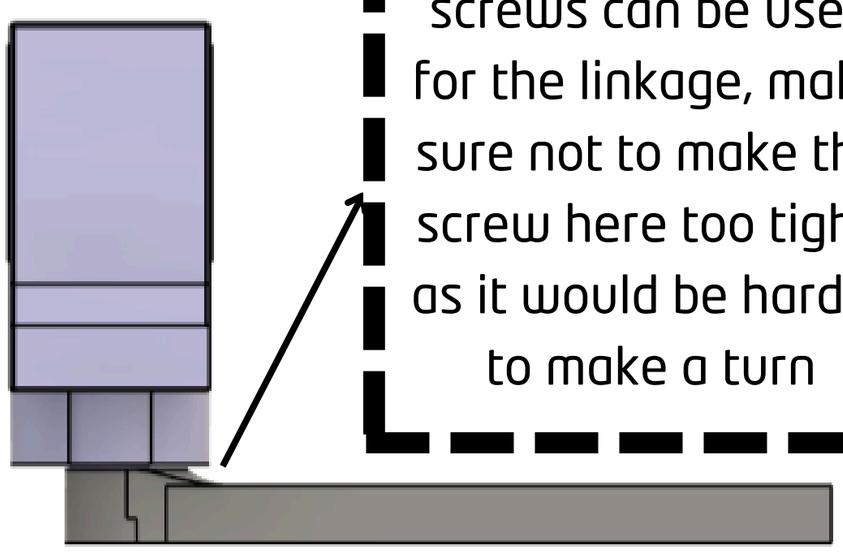

3)

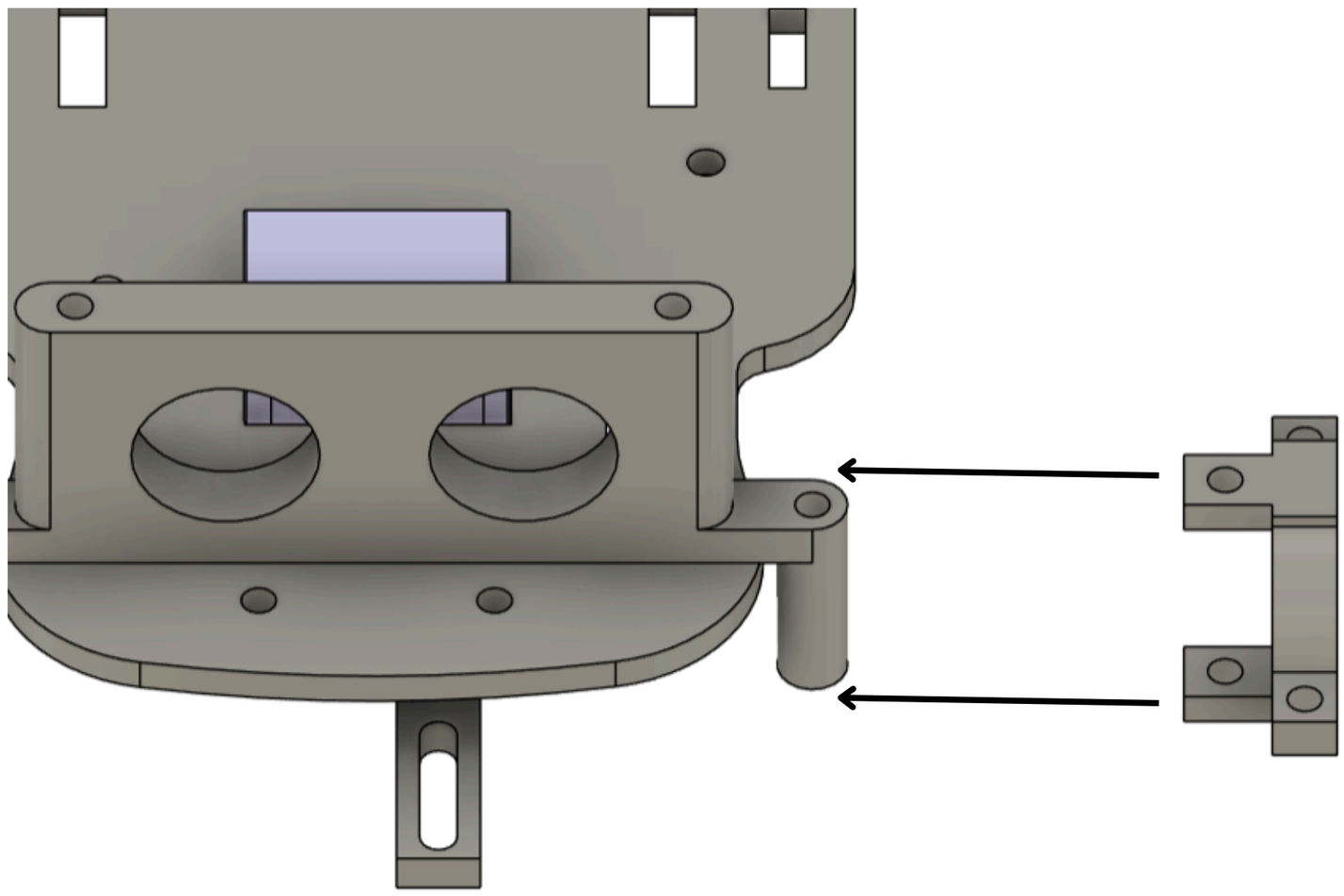

Alignment Image

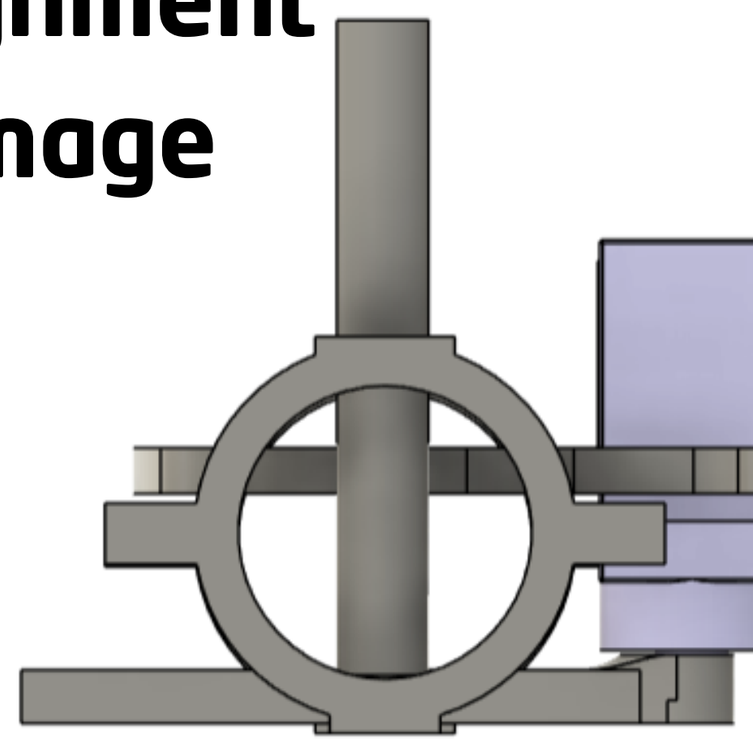

4)

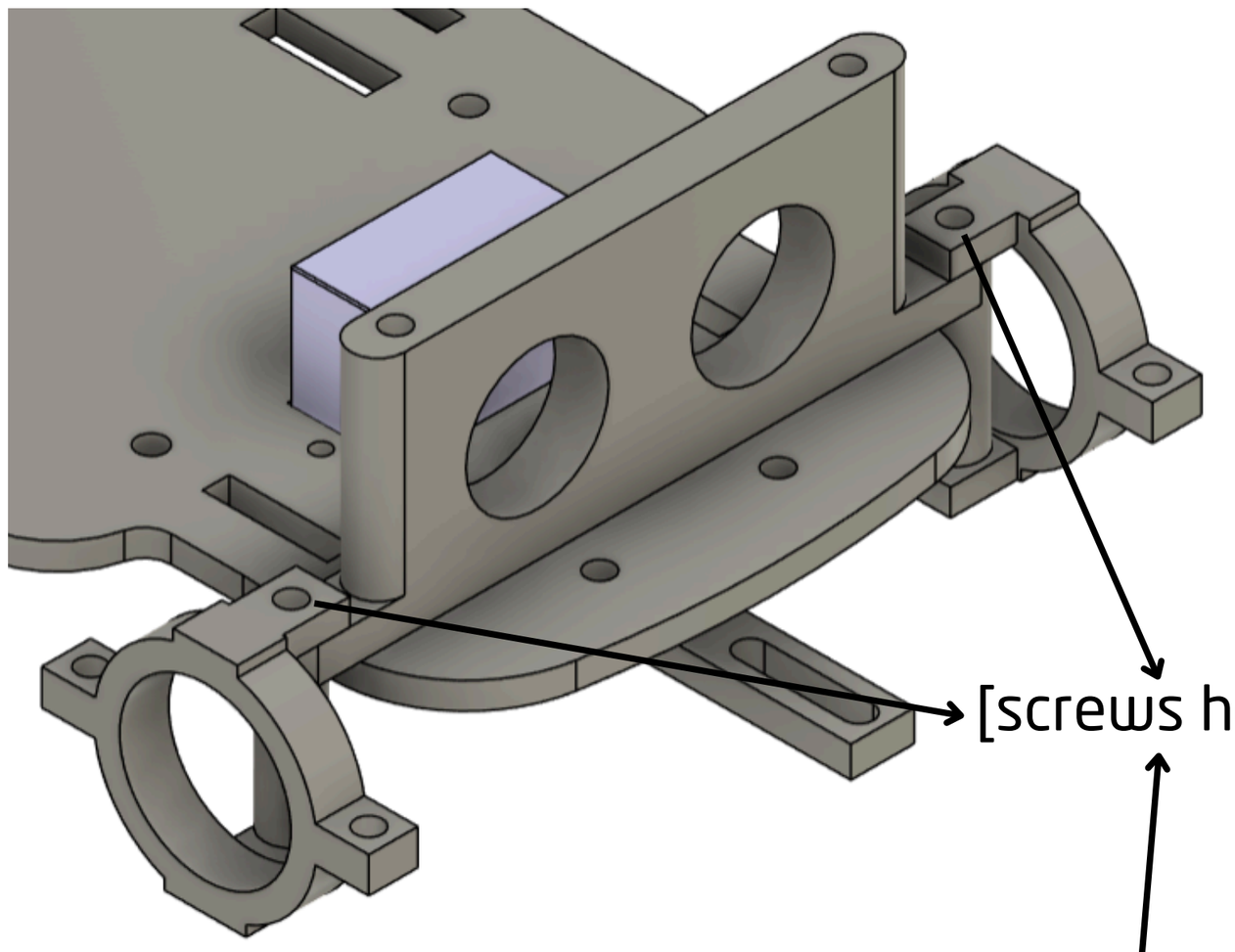

Fitting Info

Make sure not to make the screw here to tight, as it would be harder to make a turn

5)

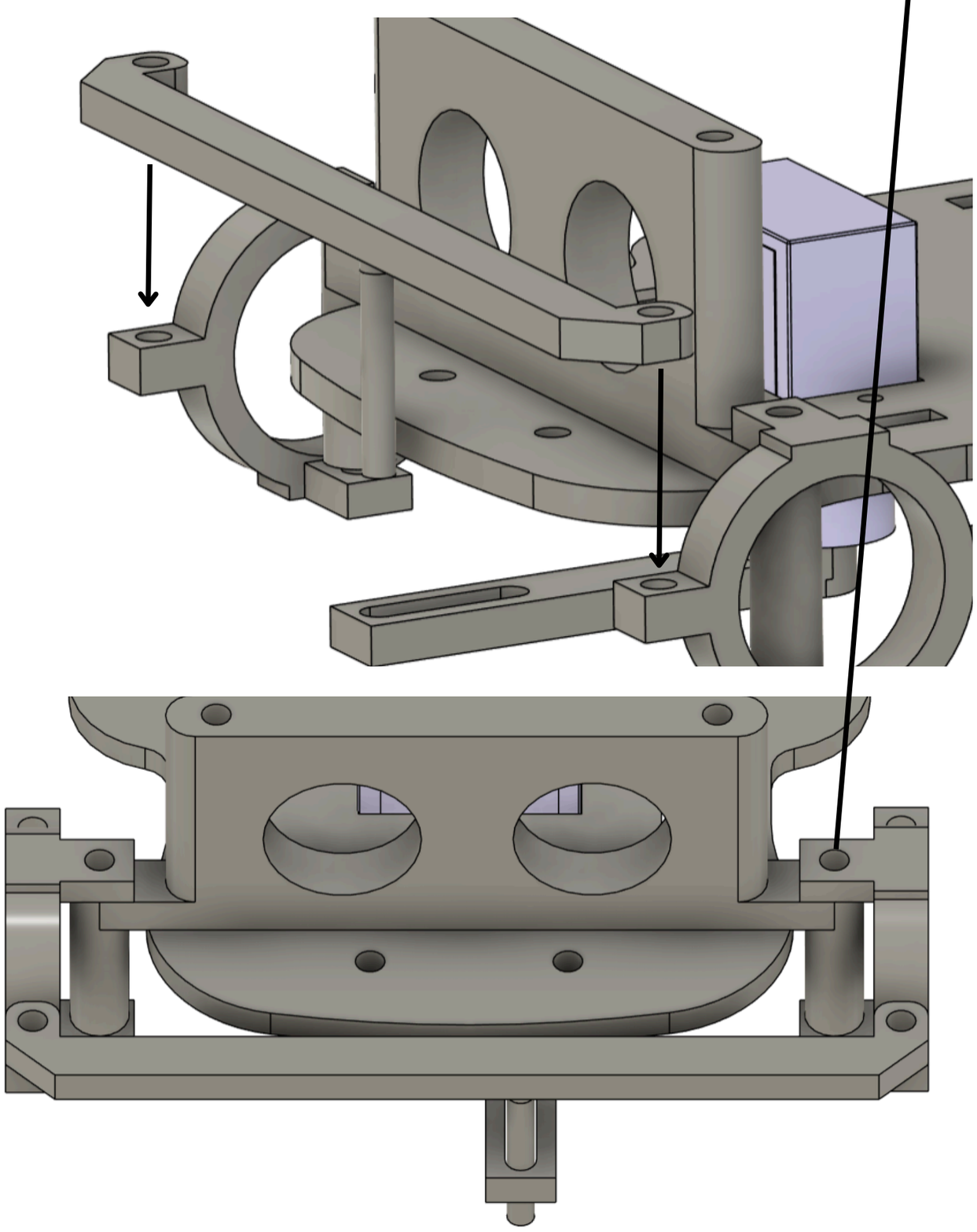

Alignment Image

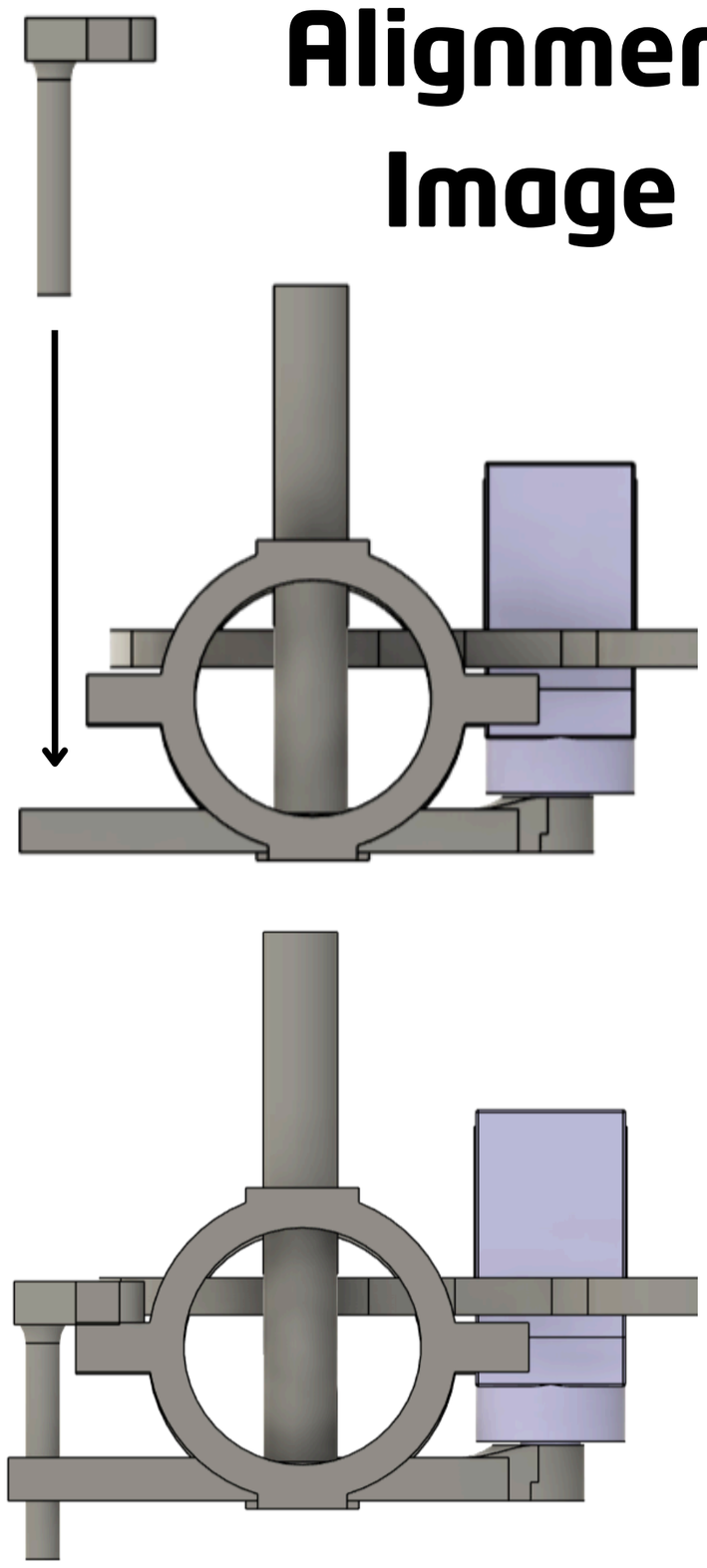

Top plate [Part 2B]

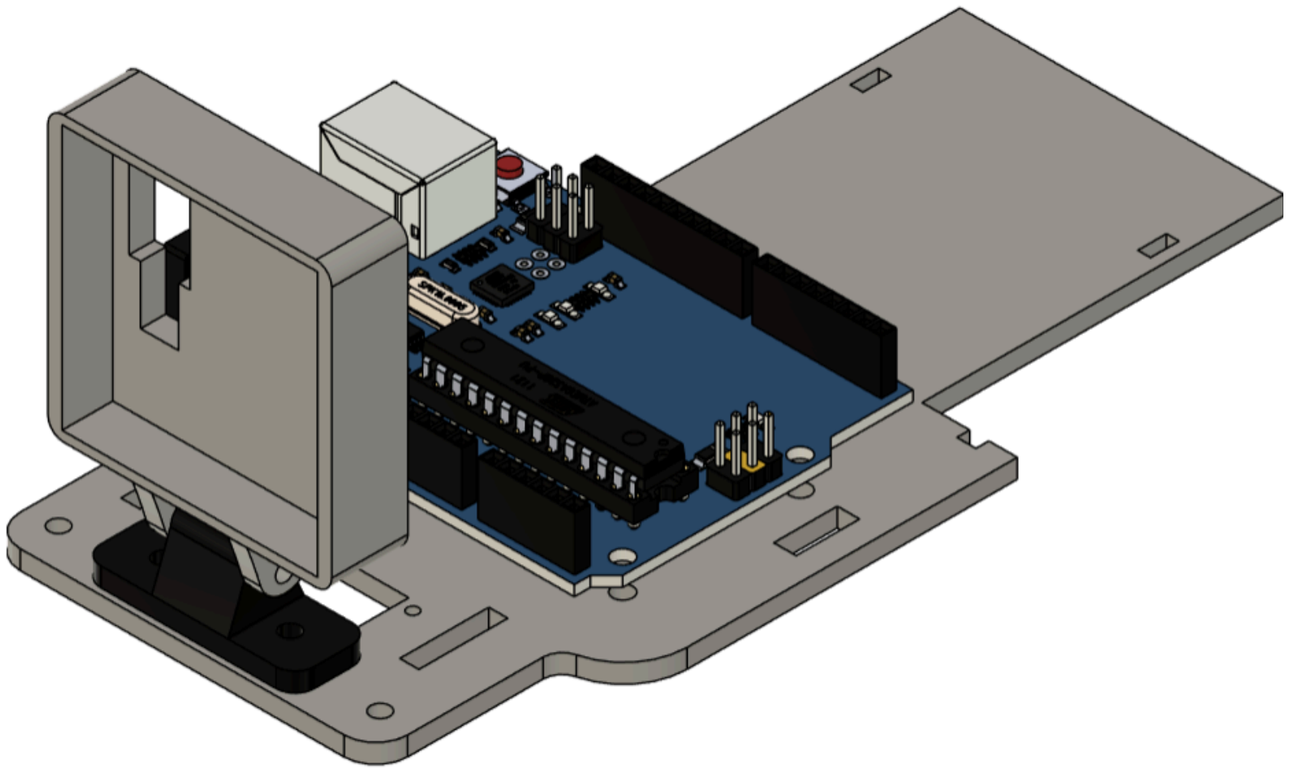

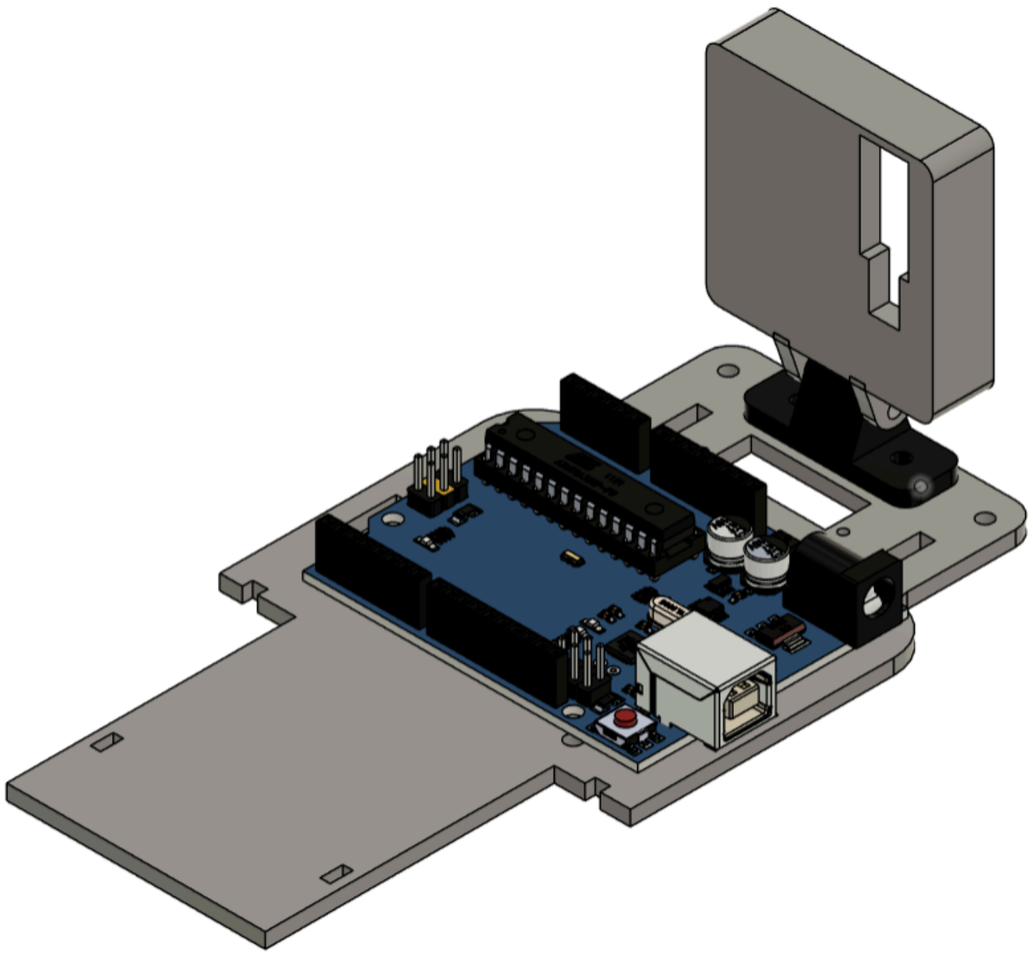

1)

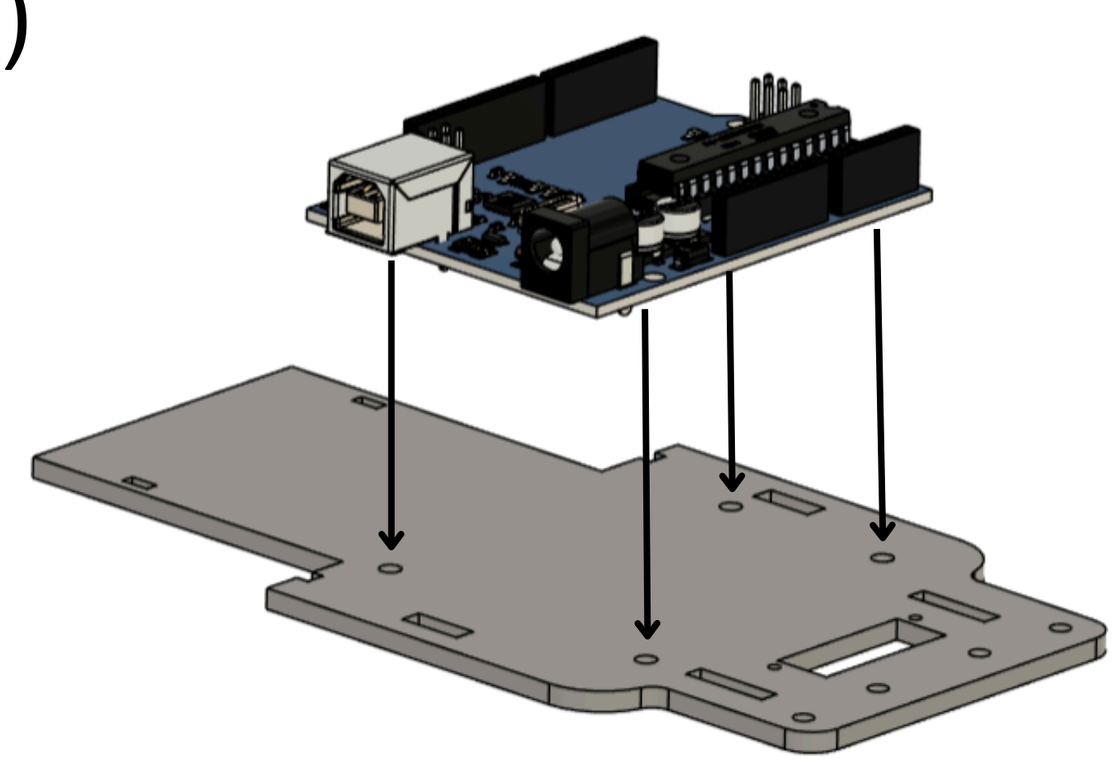

2)

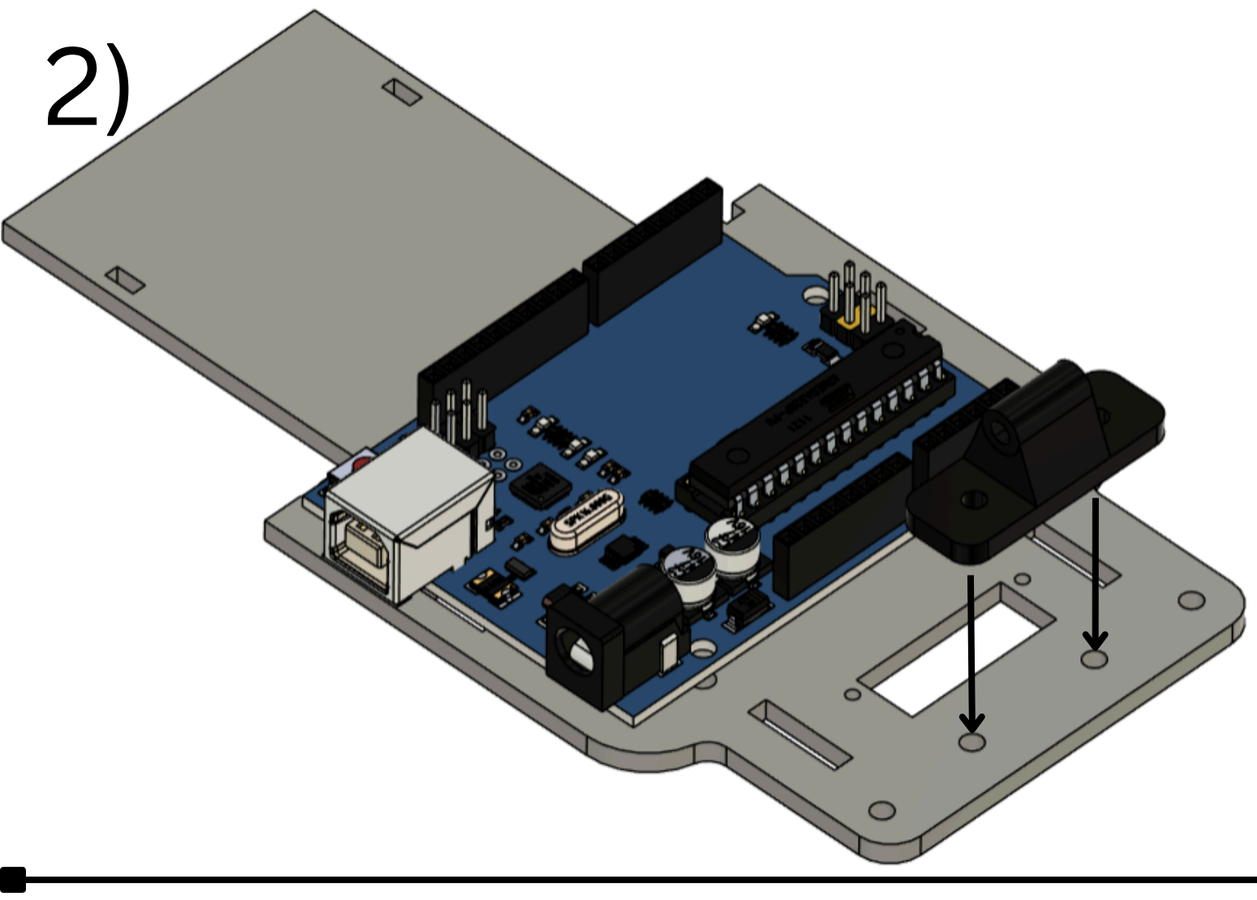

Alignment Image

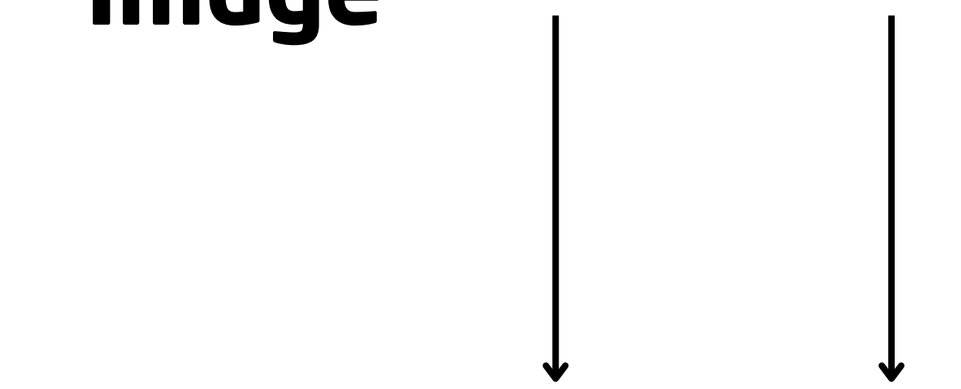

[screws here]

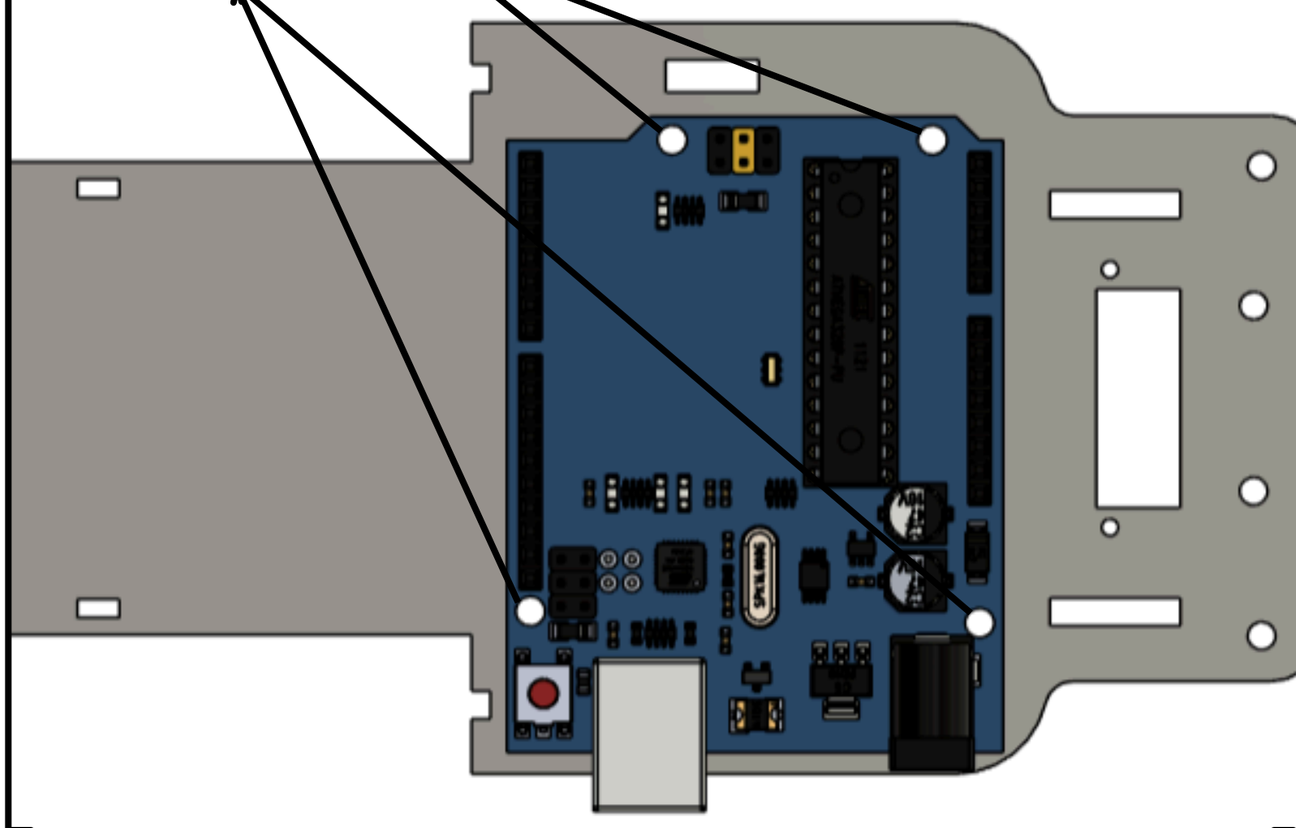

Alignment Image

[screws here]

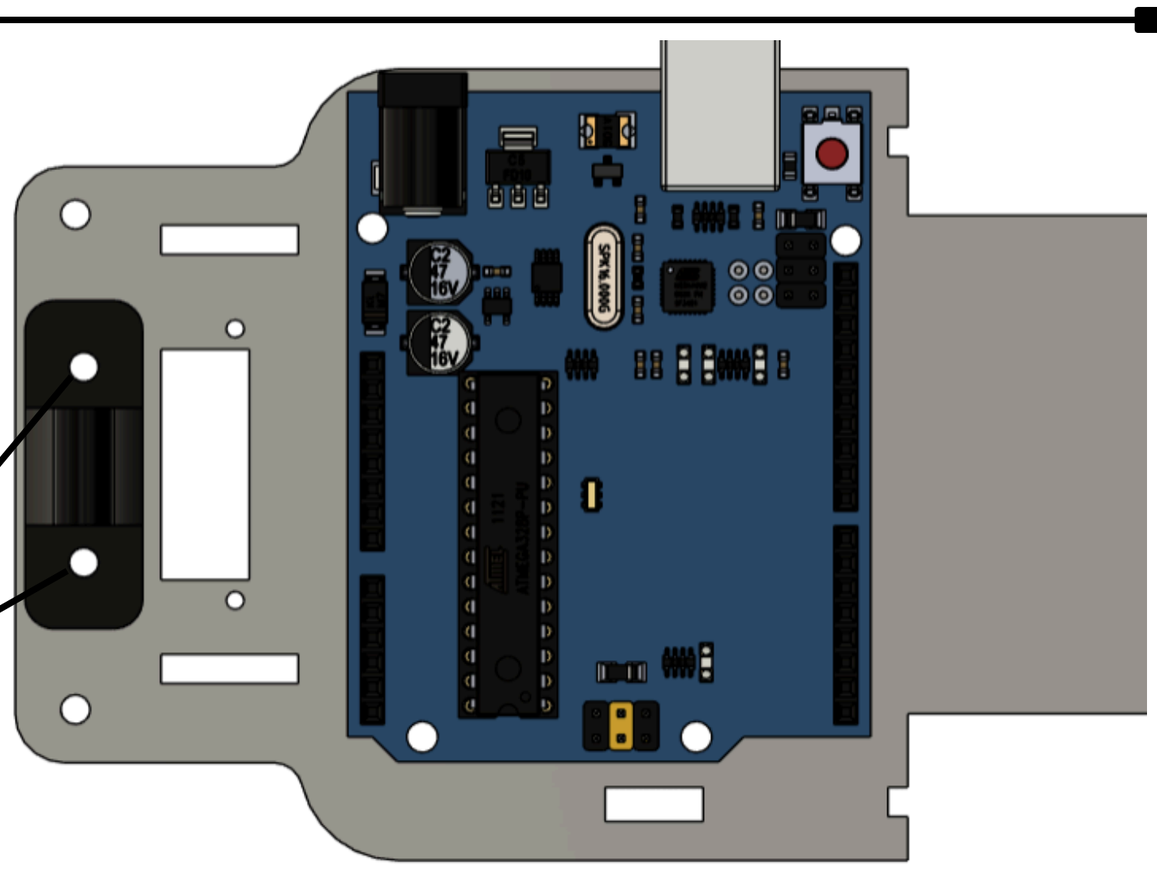

3)

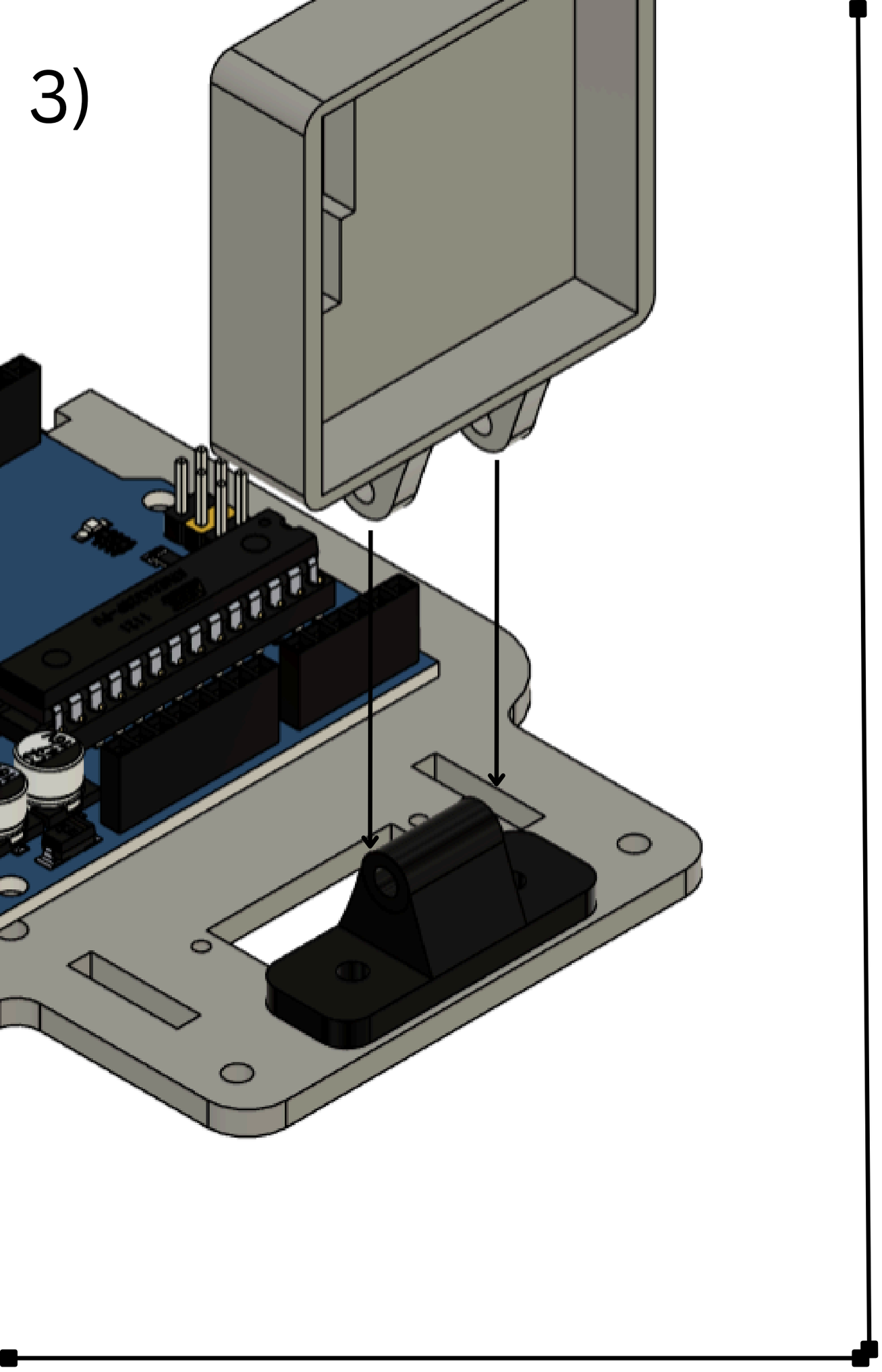

Alignment Image

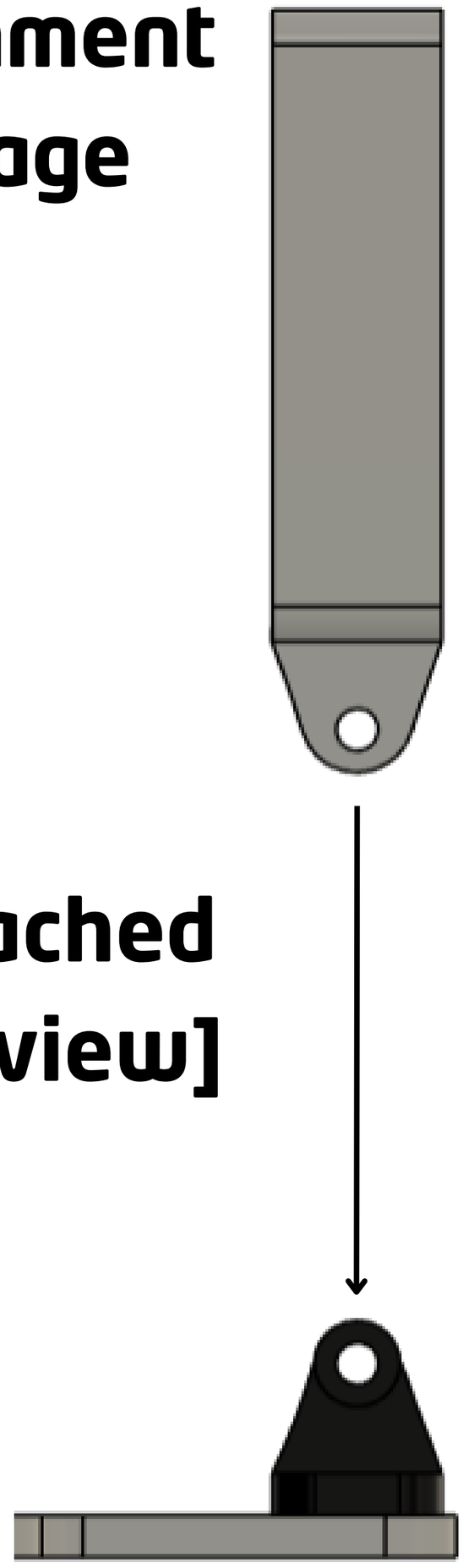

[Detached Side view]

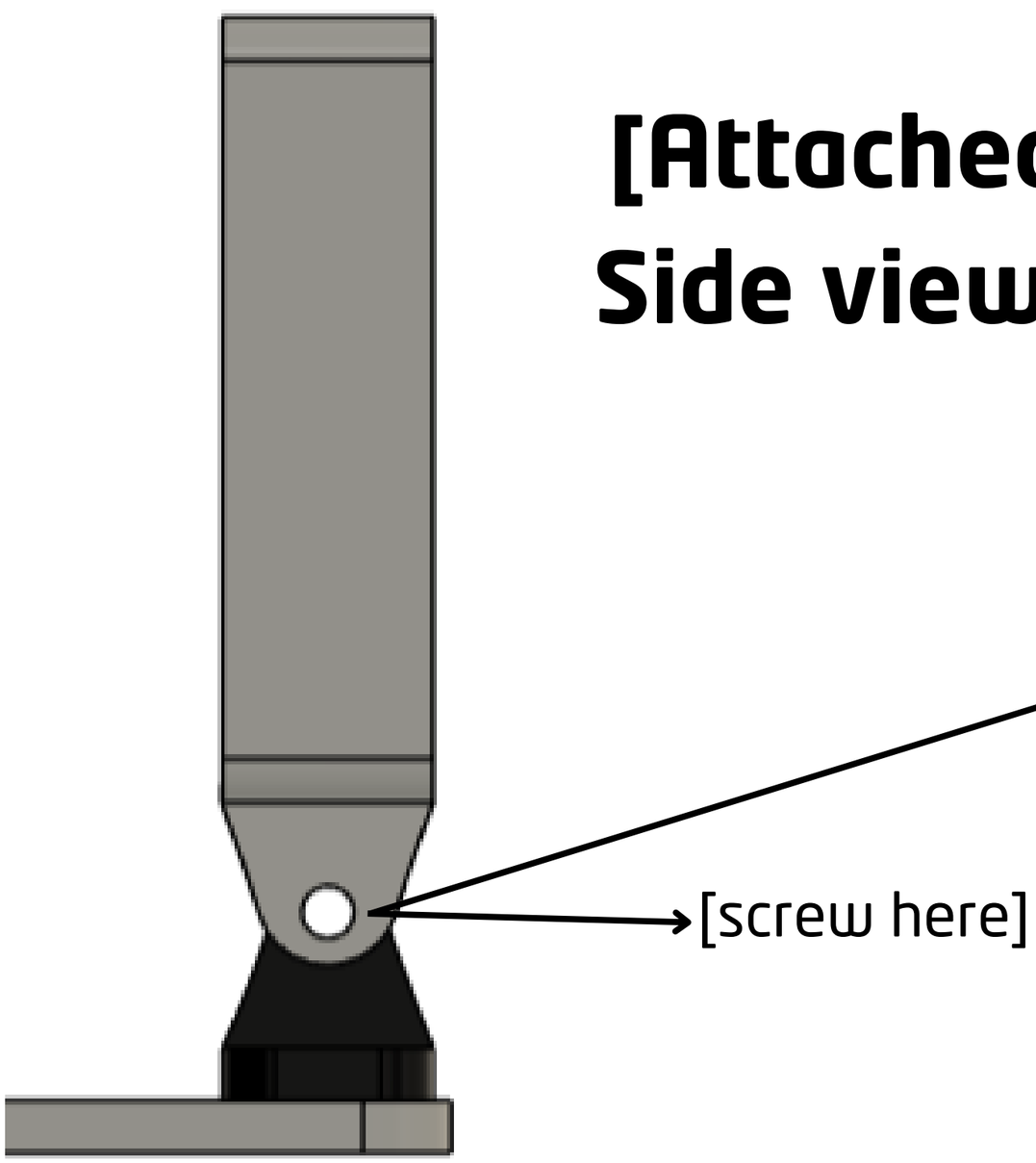

[Attached Side view]

Fitting Info

Make sure not to make the screw here to tight, as it would be harder to adjust the Pixy angle

4)

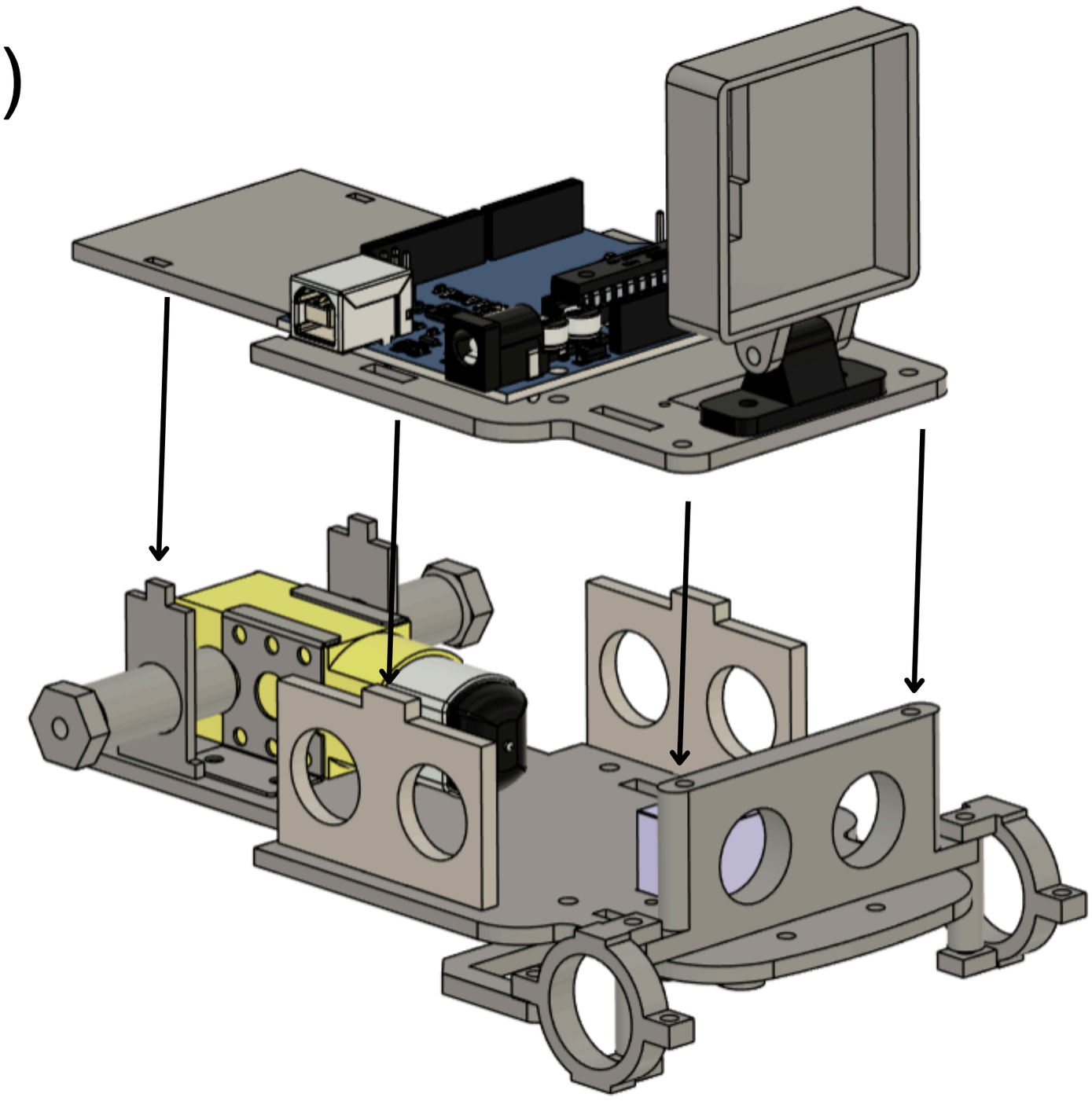

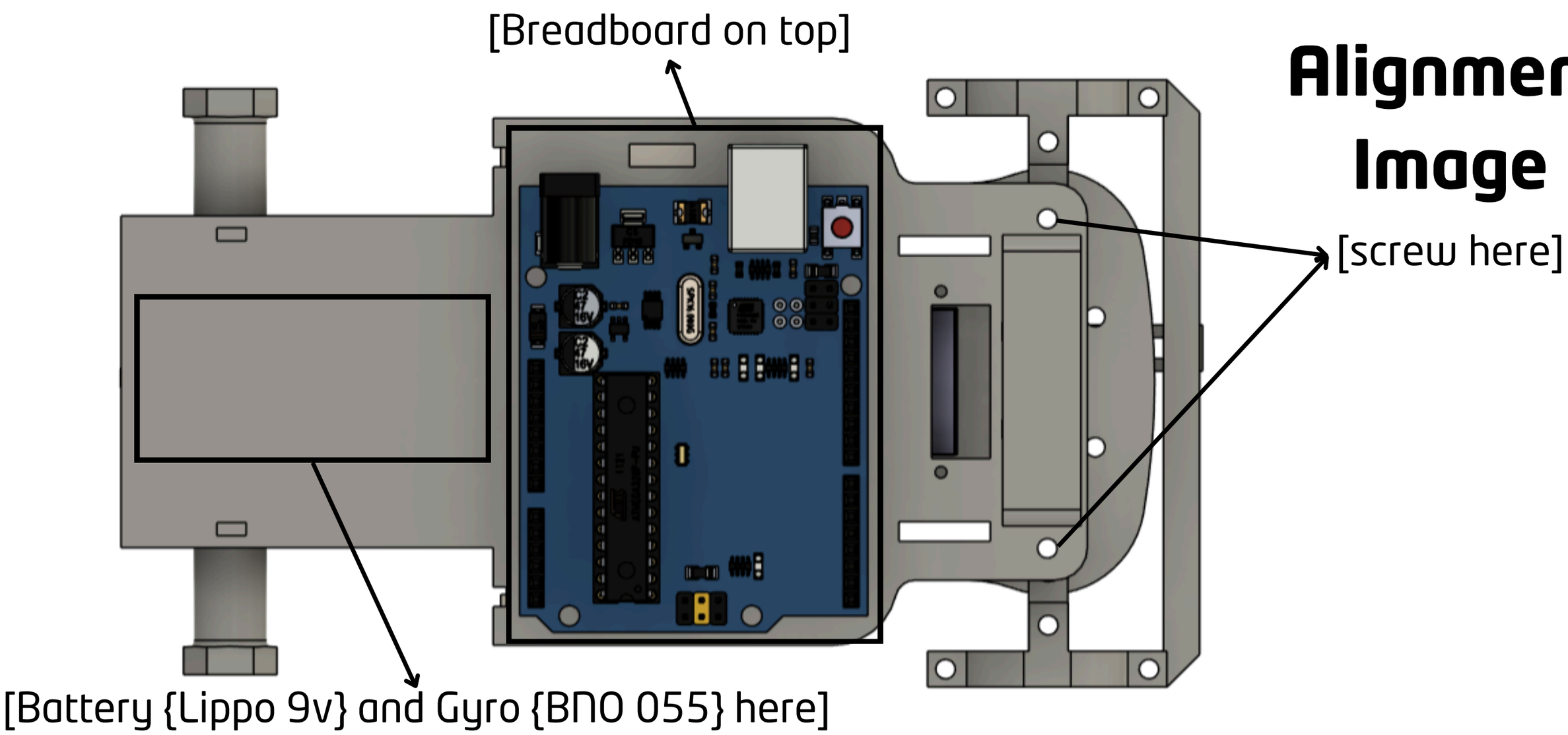

Alignment Image

Construction Complete

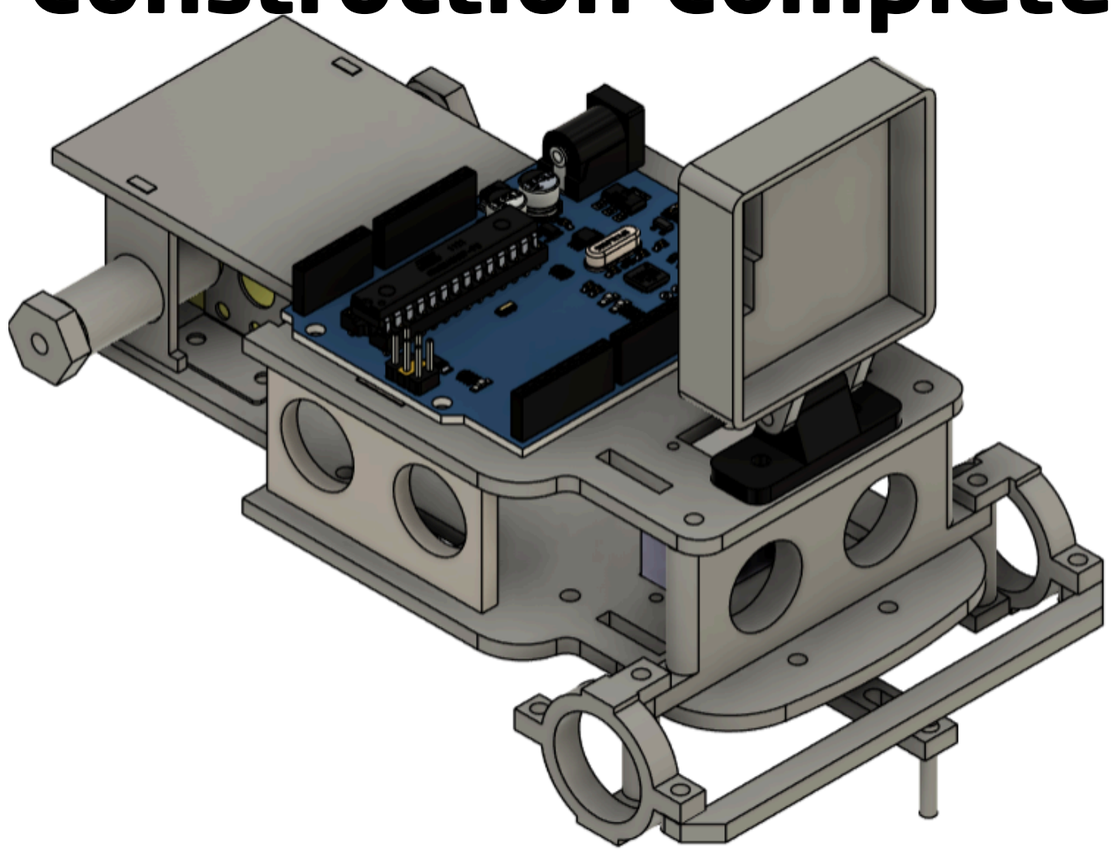

Extended Mobility Management

Motors

- We have used 1 DC motor and 1 Servo.
- Our DC motor is a *BO motor,* We use it as it is a **Dual-shaft motor**, meaning we can directly connect our **Drive Wheels** to the motor, no extra mechanism needed.
- For this “Base Bot”, we used an *SG90 Mini Servo* for **Steering** but in later iterations {Check Iteration manual} an *MG90 Mini* was used, We used the *SG90* as it had **low Power Consumption** and **good Operating Speed**, allowing it to be adaptable to the *Steering Mechanism*.

Chassis

- The Chassis, mainly the *top and bottom* plates are fully custom designs, made to ensure **Good Balance** and a stable **COG**.
- We have used them through all iterations {Check Iteration manual} as they allow the robot’s *motors and wires* to be covered while also allowing space to build on them
- In the robot itself, the *Arduino*, *battery*, *breadboard* and *Pixy* are on the top plate while the *Motors* and *Ultra sonic sensors* are within the Chassis.
- The *Ultra sonic mounts* hold together the plates and the Chassis itself has 15mm **Ground Clearence** allowing a bigger **Turn Radius.**

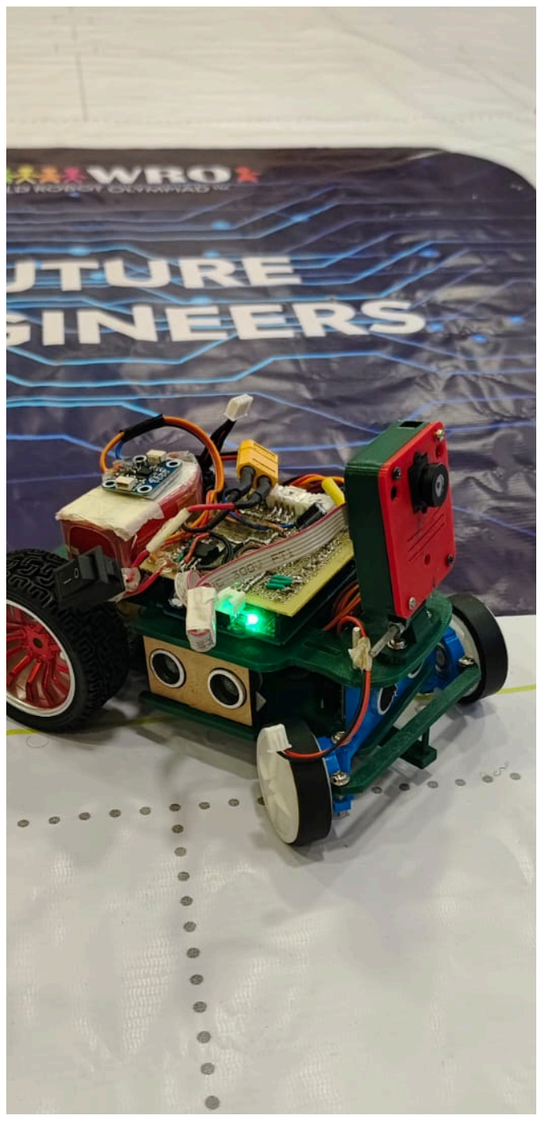

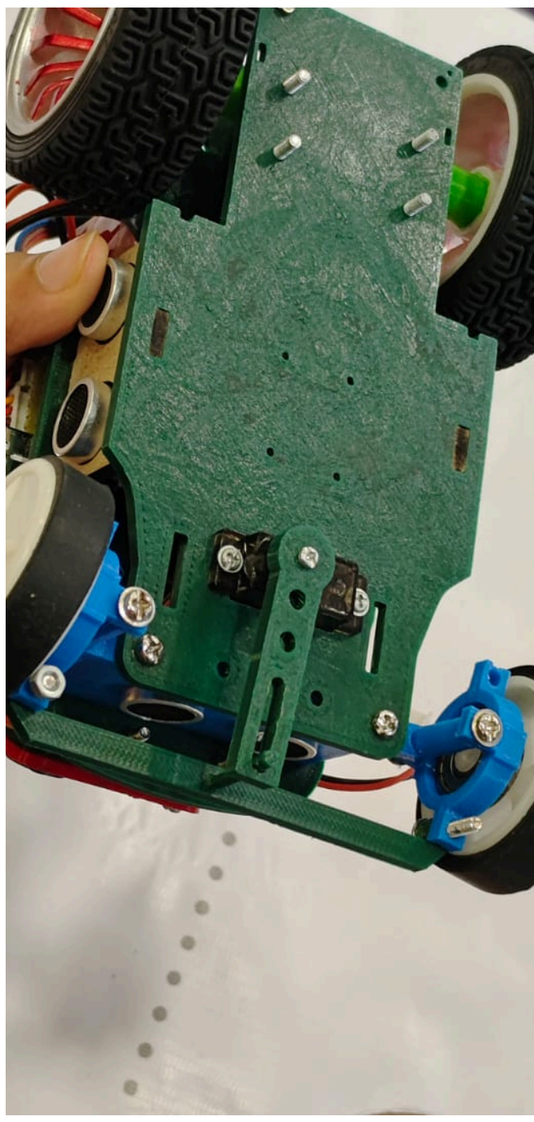

Power and Sense Management

Circuit Diagram

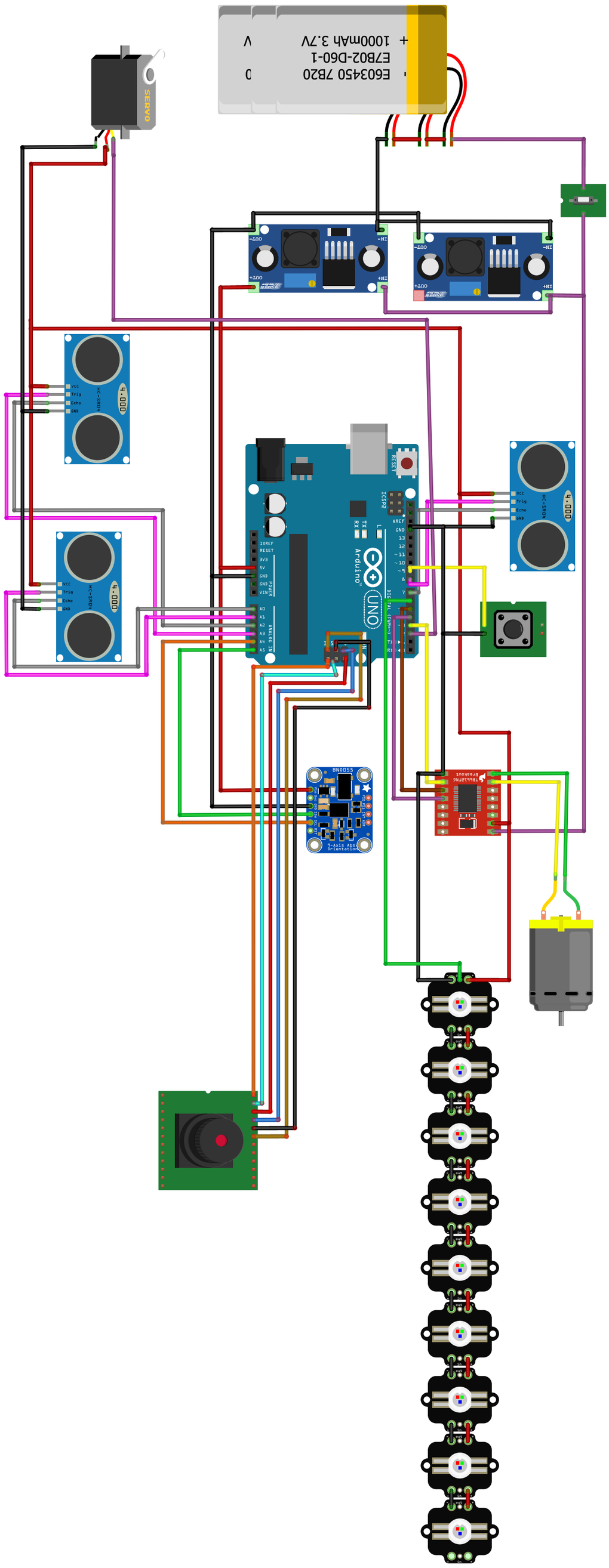

BOM:

- LM2596 (x2)
- Ultrasonic sensors (x3)
- Motor driver 1a dual
- Pixycam
- BO motor
- BNO
- Arduino UNO
- Push button
- Neo pixel (x8)
- MG90 Mini servo

Sensing:

- Our sensors consist of *IMU*, *Ultrasonic sensors*, and our *Pixy*
- *IMU* works with the servo to make sure our bot goes straight, and it helps make proper 90-degree turns.
- Our *Ultrasonic sensor* is used to to determine the distance to turn.
- Our *Pixy (plus Neo pixels)* is used for accurate color sensing.

Obstacle Management

Round one

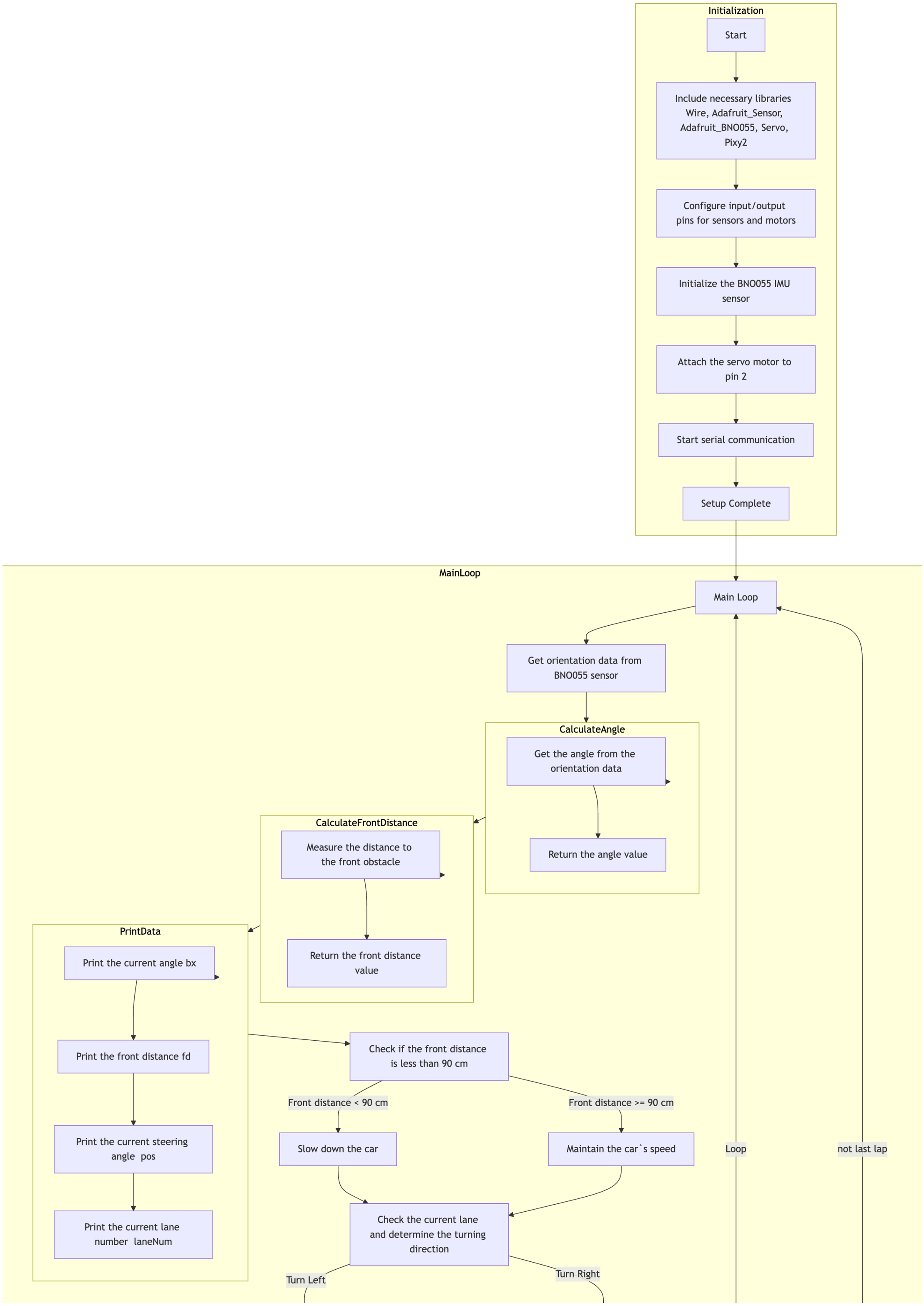

Round 1 Continuation

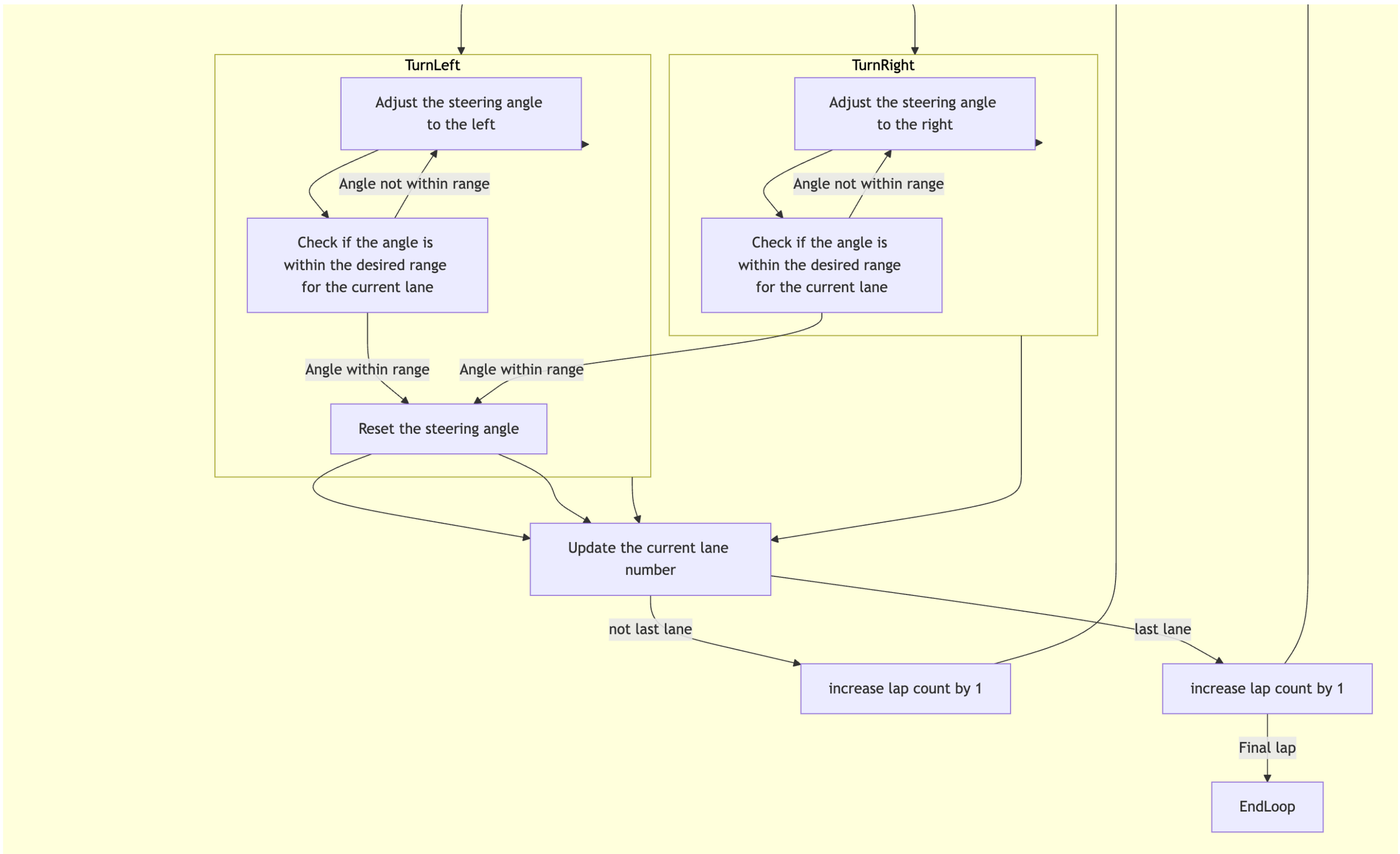

Round Two

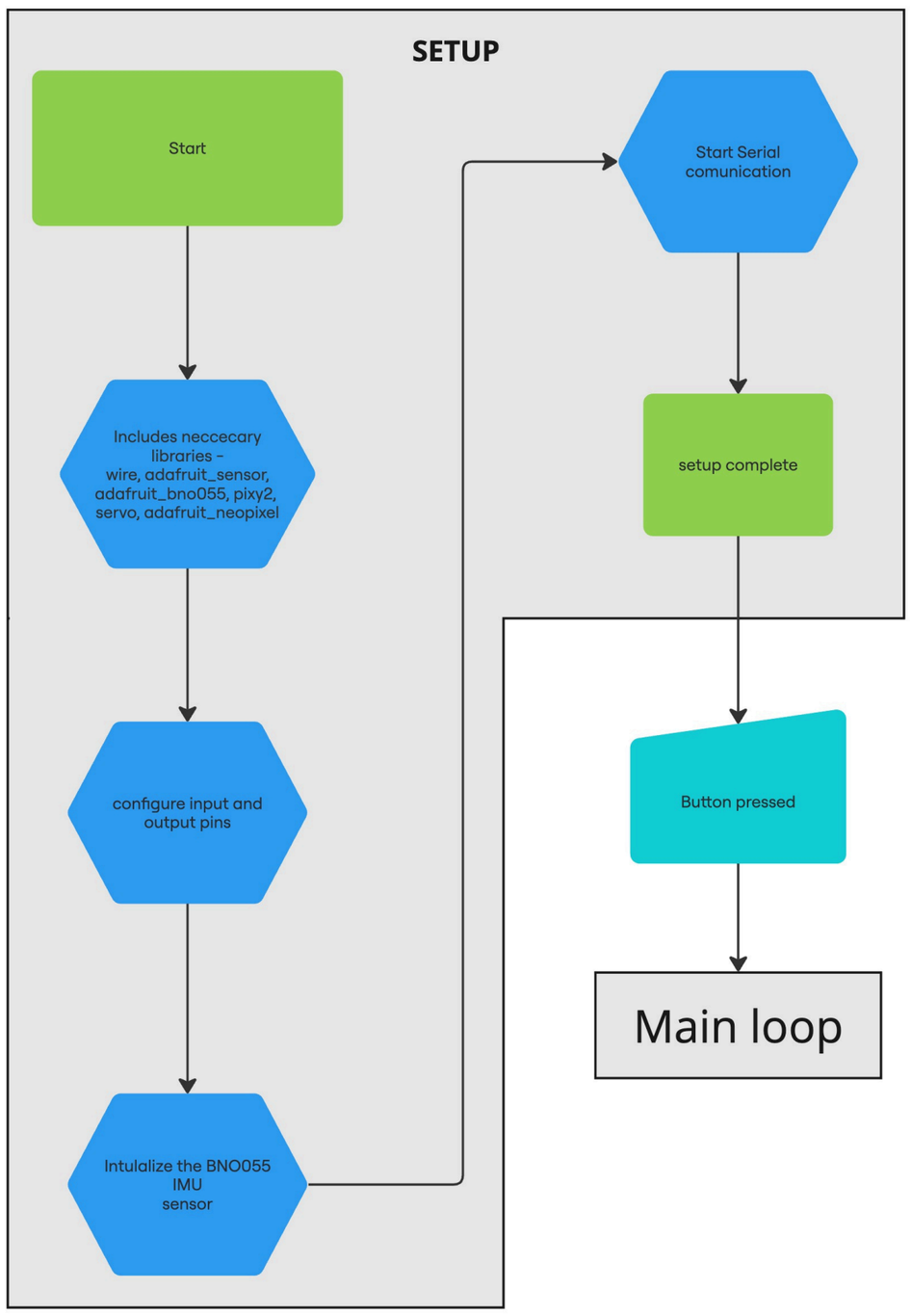

Round Two Continuation

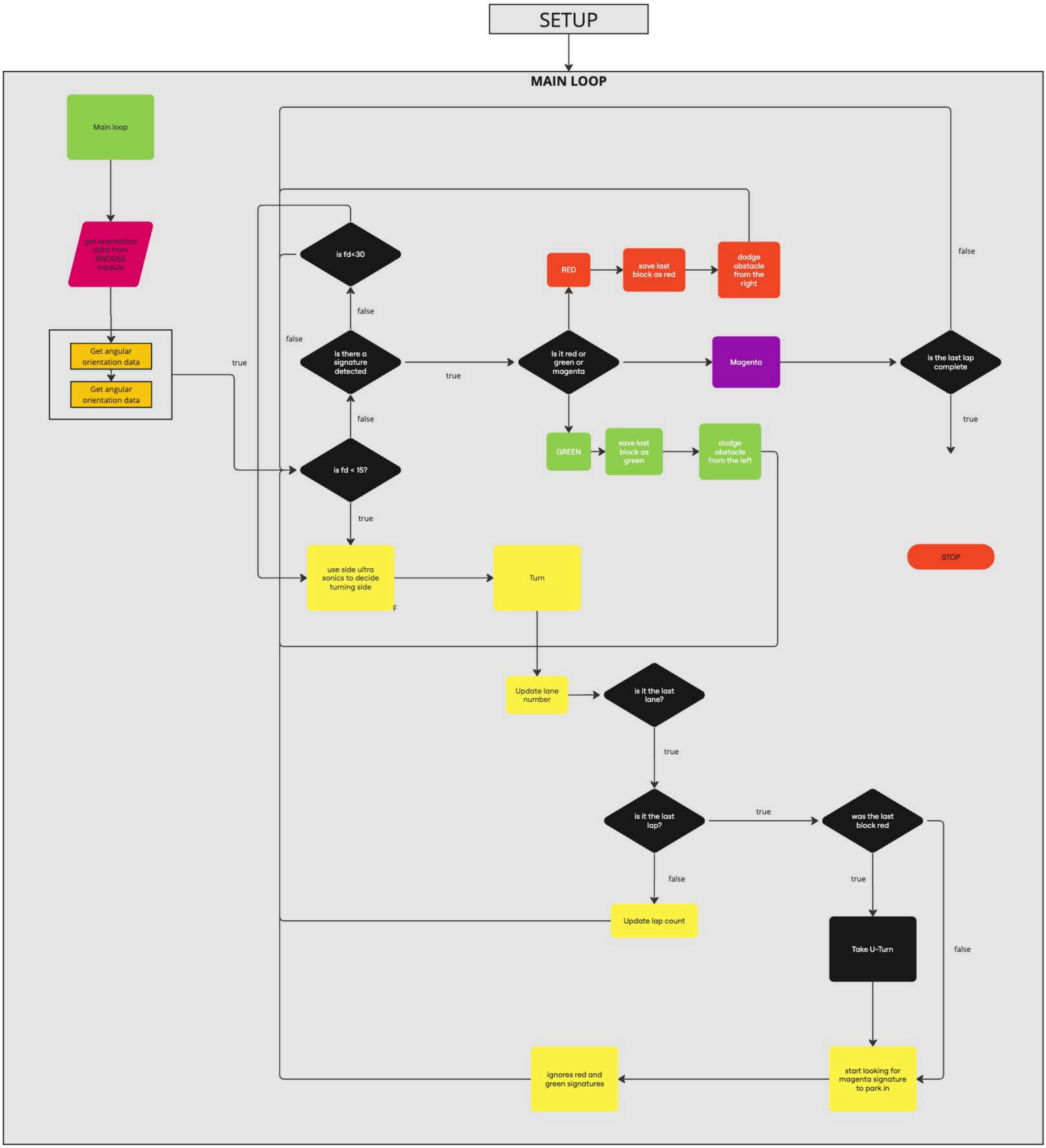

[Both flowcharts available on our git]

{https://github.com/TechTronics2024/WRO-Future-Engineers-2024_RoboChampions/tree/main}

Github QR Code

THANK YOU