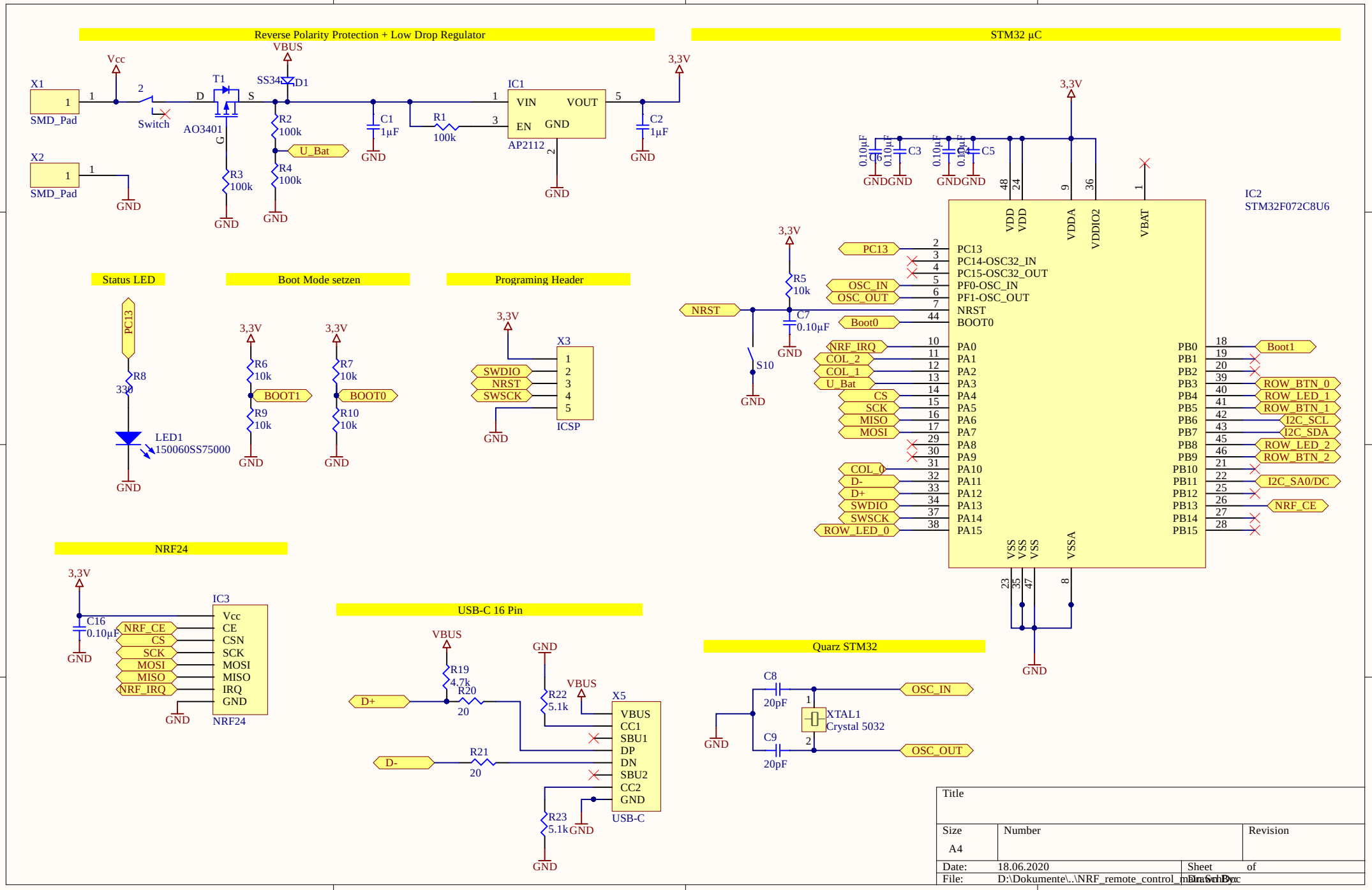
Reverse Polarity Protection + Low Drop Regulator
STM32 µC
Status LED
Boot Mode setzen
Programing Header
NRF24
USB-C 16 Pin
Quarz STM32
X1
SMD_Pad
X2
SMD_Pad
Vcc
Switch
T1
AO3401
VBUS
SS34
D1
R2
100k
R3
100k
R4
100k
U_Bat
C1
1µF
R1
100k
IC1
AP2112
VIN
VOUT
EN
GND
C2
1µF
3,3V
GND
PC13
R8
330
LED1
150060SS75000
R6
10k
R9
10k
BOOT1
R7
10k
R10
10k
BOOT0
X3
ICSP
SWDIO
NRST
SWSCK
IC3
NRF24
C16
0.10µF
NRF_CE
CS
SCK
MOSI
MISO
NRF_IRQ
Vcc
CE
CSN
SCK
MOSI
MISO
IRQ
GND
R19
4.7k
R20
20
R21
20
R22
5.1k
R23
5.1k
D+
D-
X5
USB-C
VBUS
CC1
SBU1
DP
DN
SBU2
CC2
GND
C8
20pF
C9
20pF
XTAL1
Crystal 5032
OSC_IN
OSC_OUT
C6
C3
C4
C5
0.10µF
IC2
STM32F072C8U6
VDD
VDDA
VDDIO2
VBAT
VSS
VSSA
PC13
PC14-OSC32_IN
PC15-OSC32_OUT
PF0-OSC_IN
PF1-OSC_OUT
NRST
BOOT0
PA0
PA1
PA2
PA3
PA4
PA5
PA6
PA7
PA8
PA9
PA10
PA11
PA12
PA13
PA14
PA15
PB0
PB1
PB2
PB3
PB4
PB5
PB6
PB7
PB8
PB9
PB10
PB11
PB12
PB13
PB14
PB15
R5
10k
C7
0.10µF
S10
NRF_IRQ
COL_2
COL_1
U_Bat
CS
SCK
MISO
MOSI
COL_0
D-
D+
SWDIO
SWSCK
ROW_LED_0
Boot1
ROW_BTN_0
ROW_LED_1
ROW_BTN_1
I2C_SCL
I2C_SDA
ROW_LED_2
ROW_BTN_2
I2C_SA0/DC
NRF_CE
Title
Size
A4
Number
Revision
Date:
18.06.2020
Sheet
of
File:
D:\Dokumente\..\NRF_remote_control_main.Sch.Doc
Drawn By:

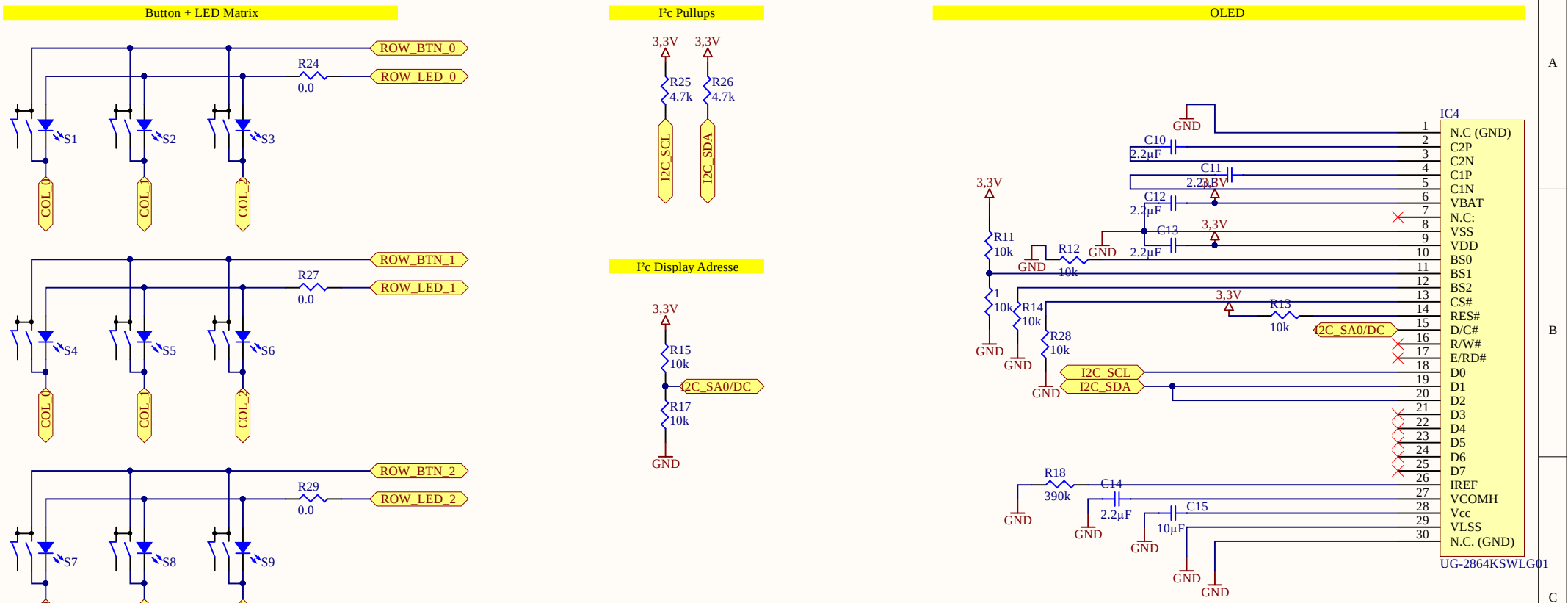

Title		
Size A4	Number	Revision
Date: 18.06.2020	Sheet of	
File: D:\Dokumente\..\NRF_remote_control_matrix.SchDoc	Drawn by:	