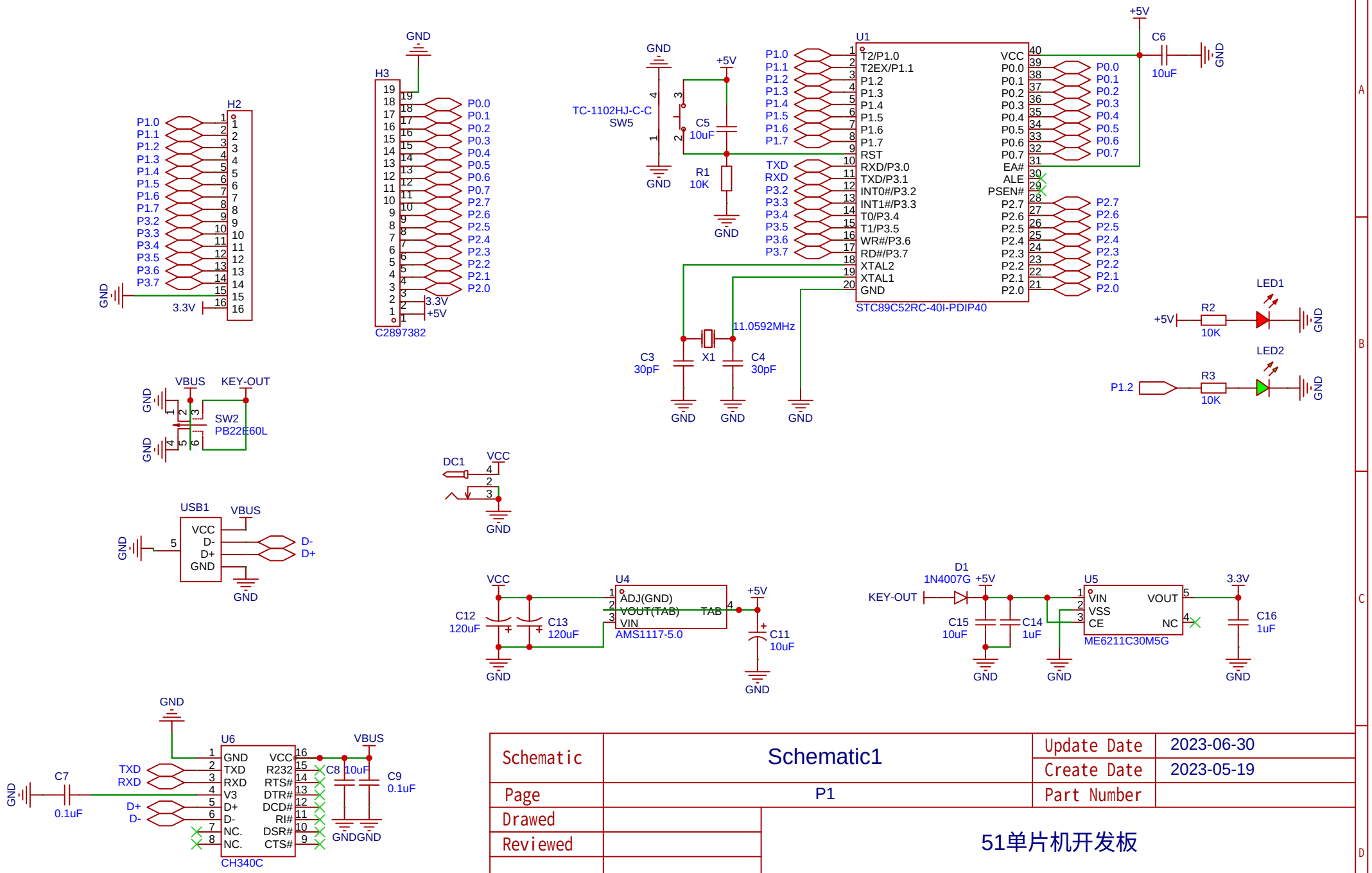

Schematic	Schematic1	Update Date	2023-06-30
		Create Date	2023-05-19
Page	P1	Part Number	
Drawed		51单片机开发板	
Reviewed			
		VER	SIZE	PAGE 1 OF 1
嘉立创EDA		V1.0	A4	嘉立创EDA