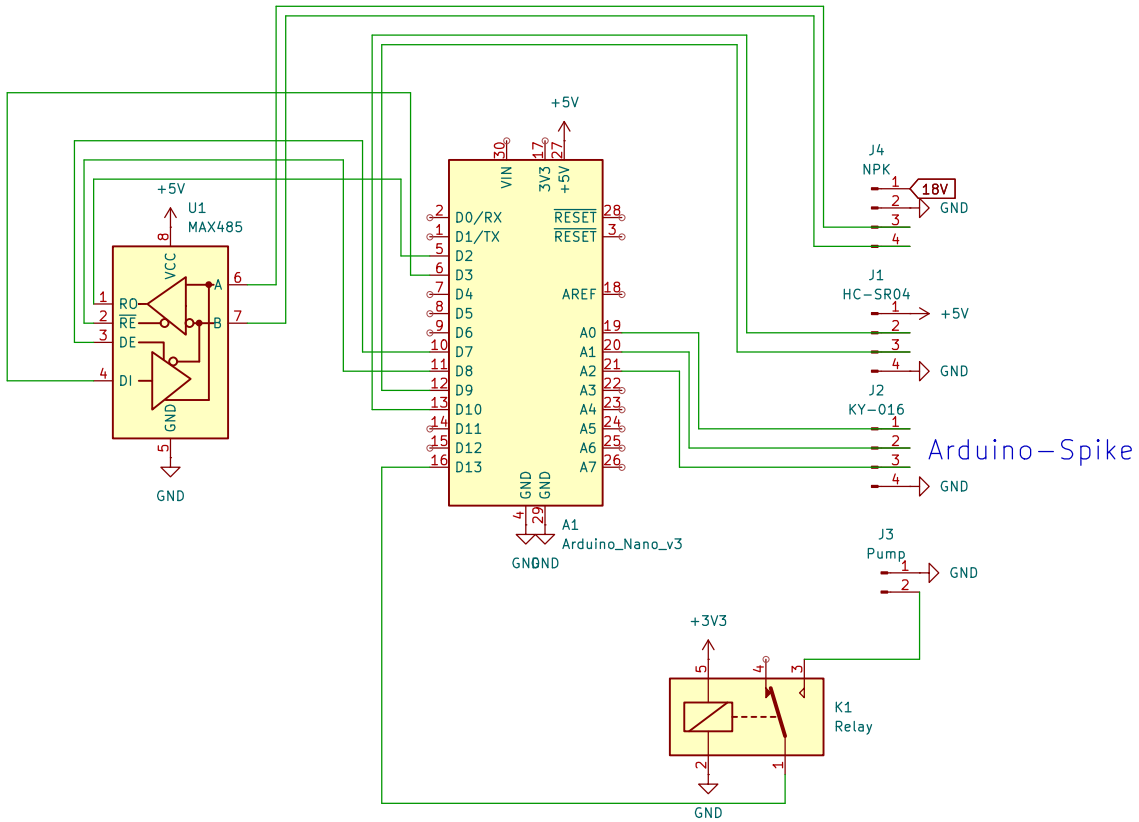

TechiStudio

Sheet: /

File: wr2025.kicad_sch

Title: Planty

Size: A4	Date: 2025-05-05	**Rev:**
KiCad E.D.A. 9.0.0		Id: 1/1