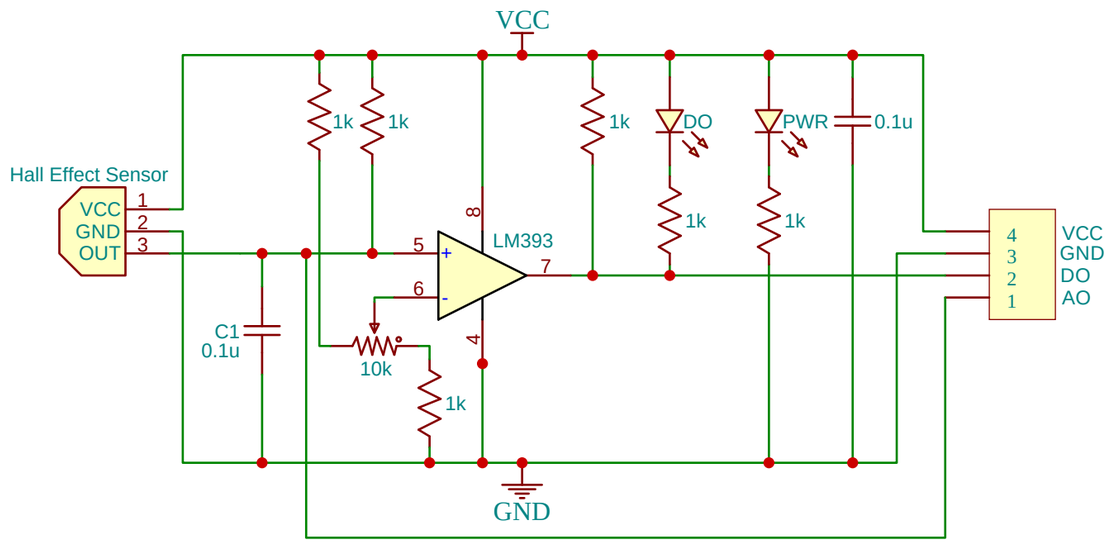

TITLE: Hall Effect Sensor		REV: 1.0
	Company: Semicon Media	Sheet: 1/1
	Date: 2022-04-07 Drawn By: Jobit Joseph	