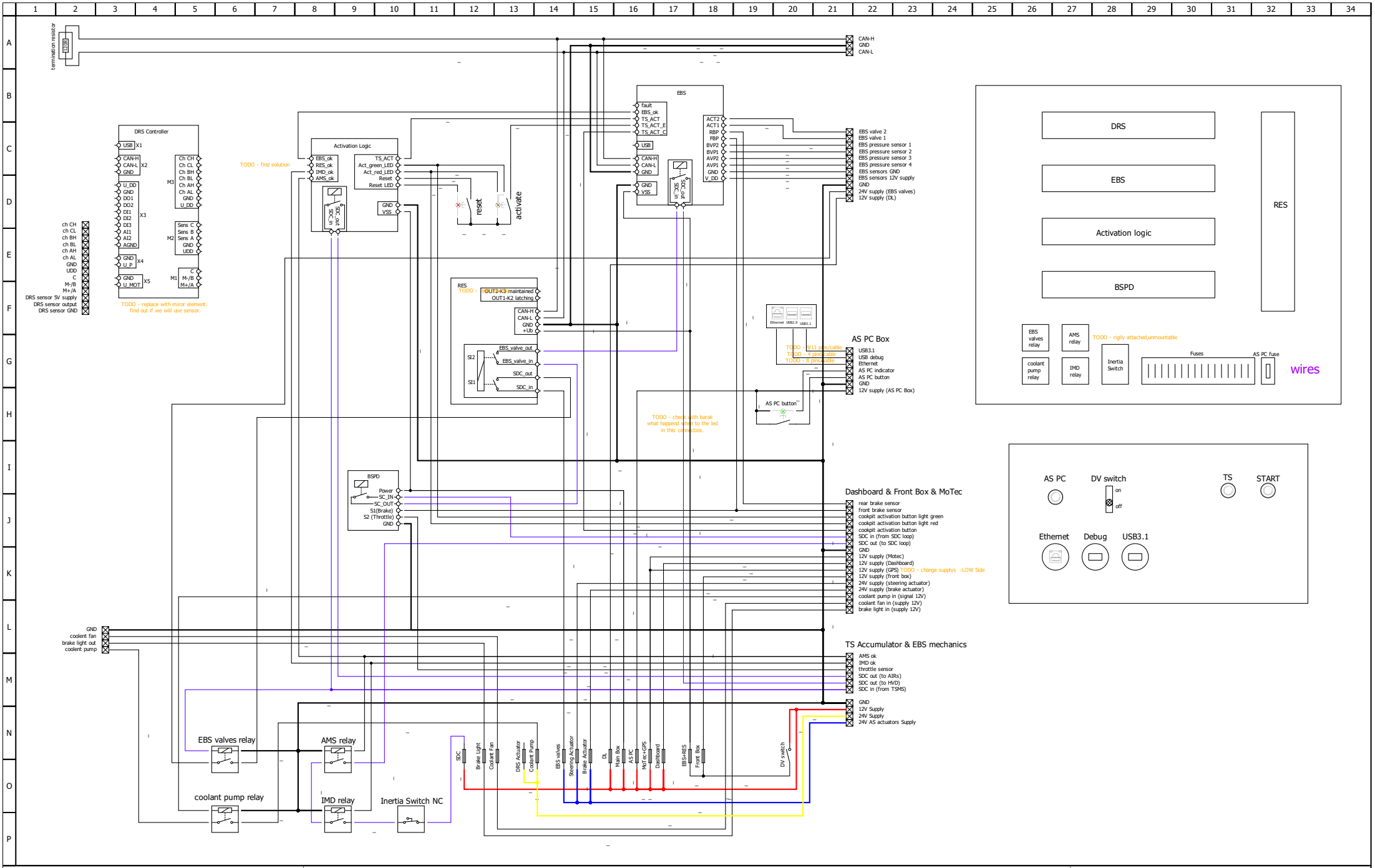

Author:	Main Electrical Box	File:
Date:		Folio: 3/7

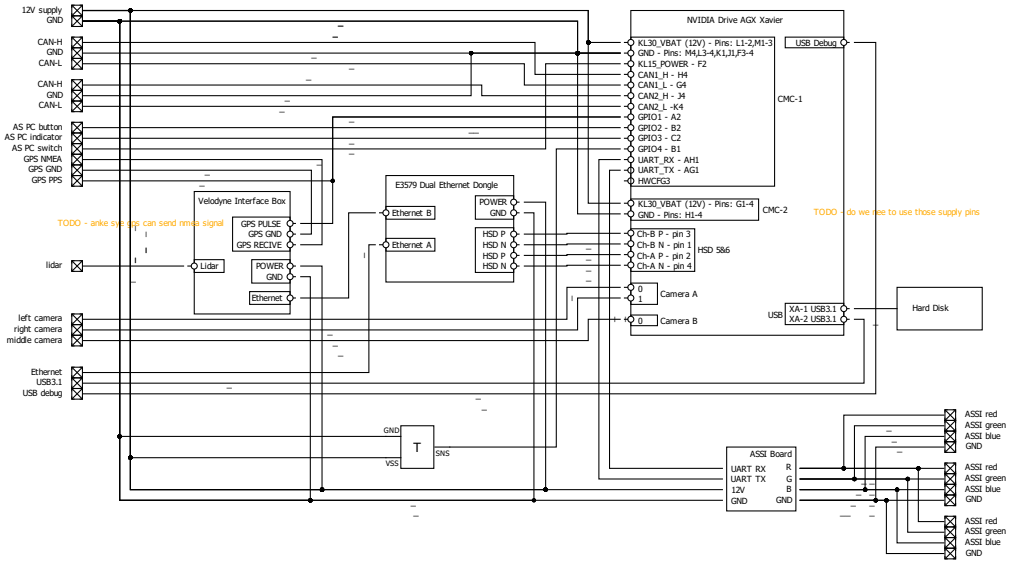

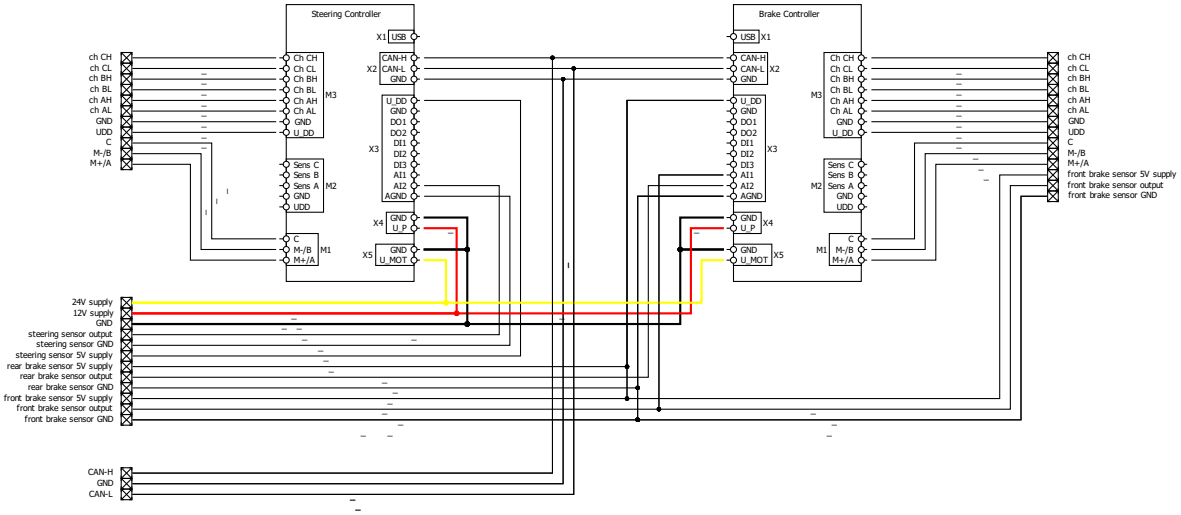

Author:	AS PC Box & Front Box	File:
Date:		Folio: 4/7

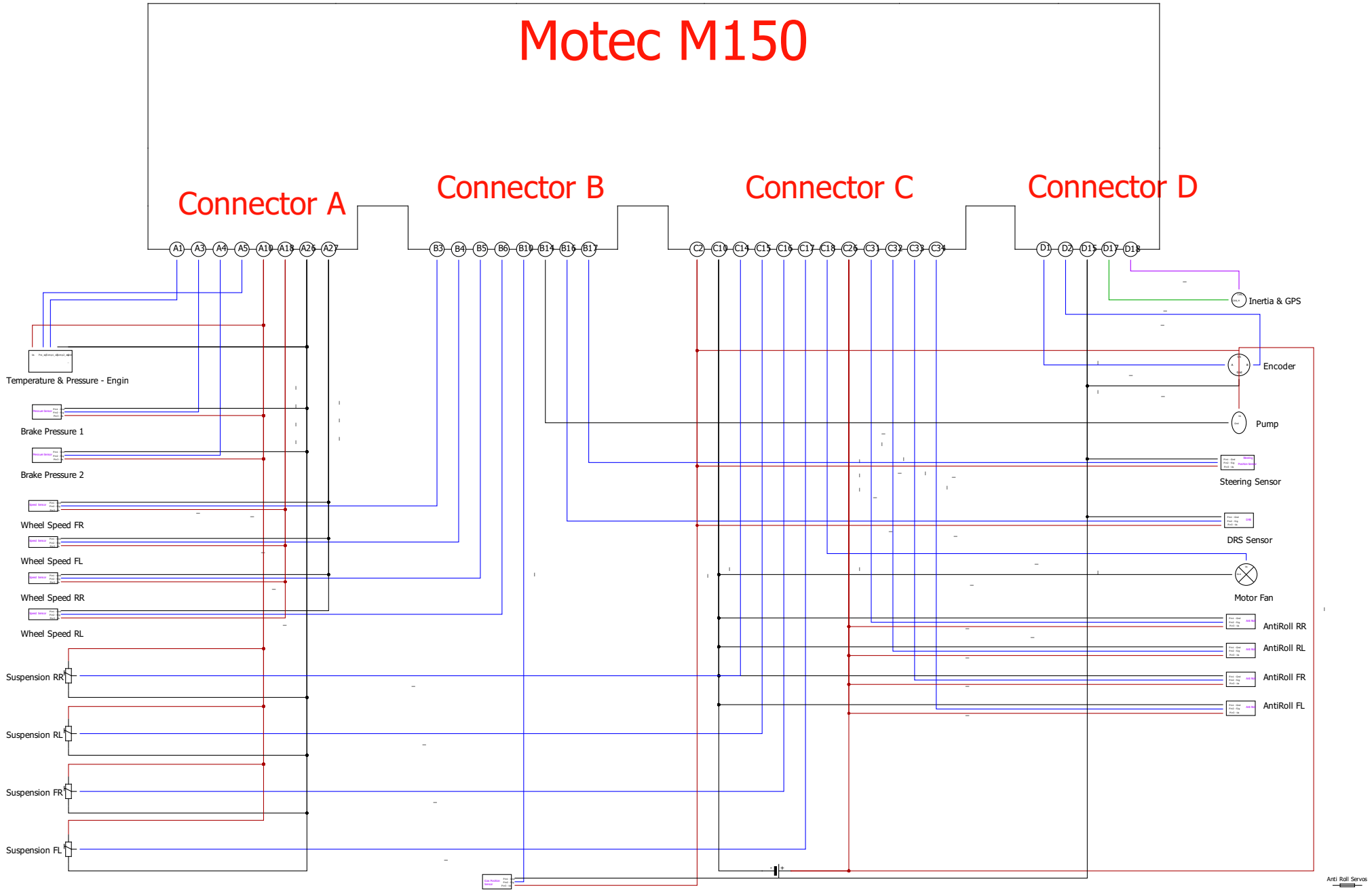

Author:	Gas Pedal Position	MoTec and Sensors	File:
Date:			Folio: 5/7

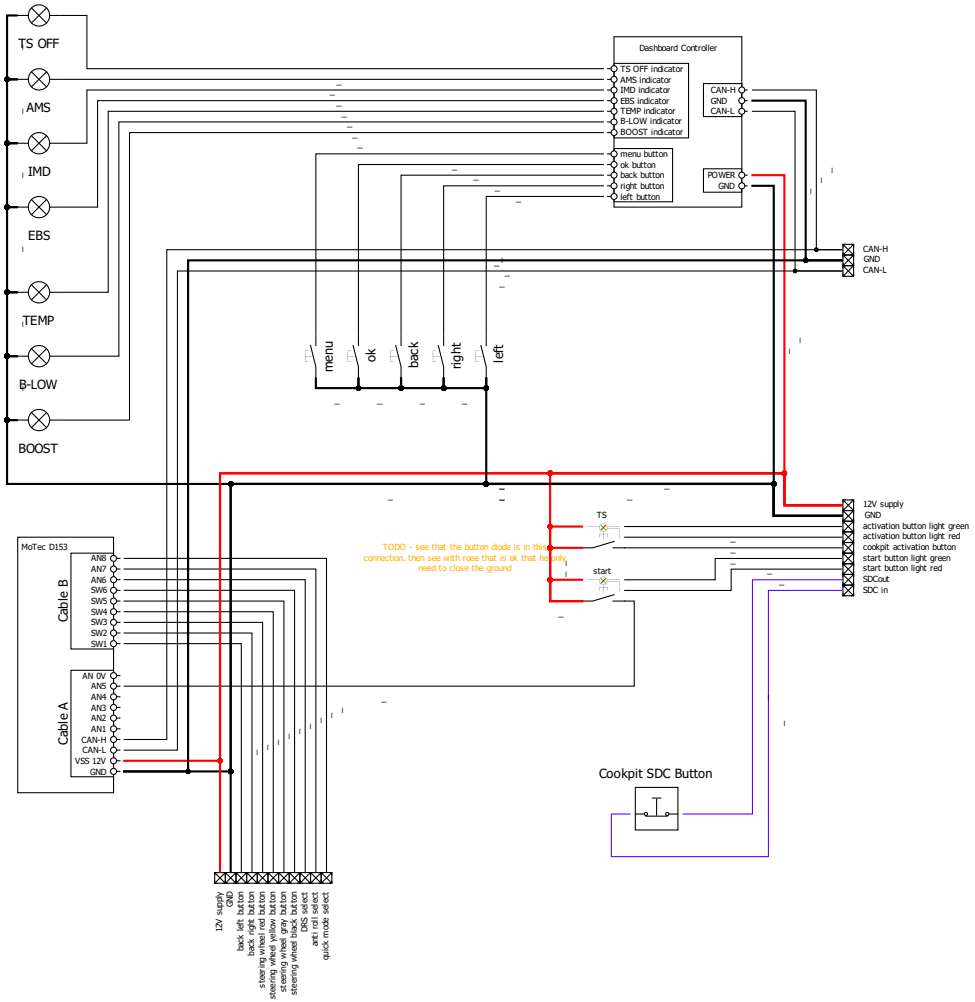

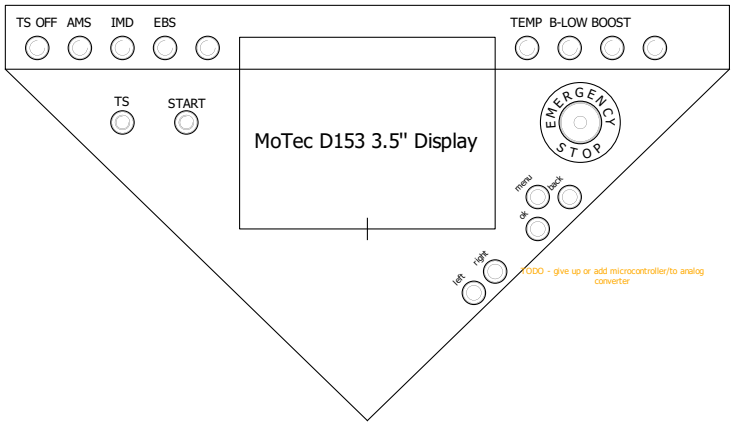

TODO - add sterring wheel drawing

Author:	Dashboard	File:
Date:		Folio: 6/7

SDC

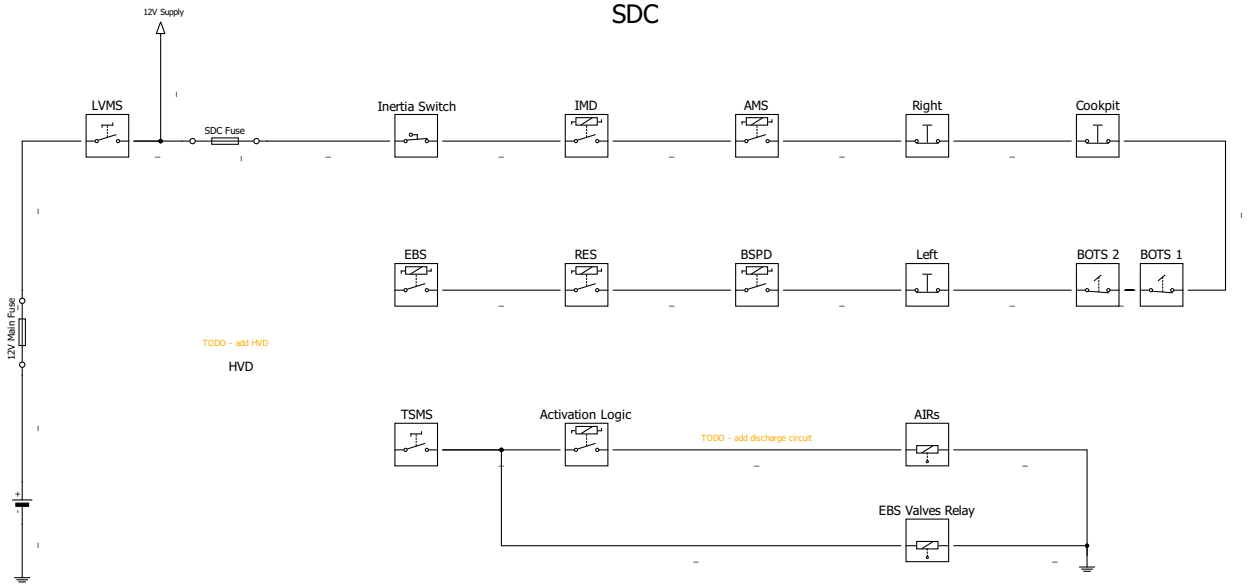

Author:	SDC	File:
Date:		Folio: 7/7