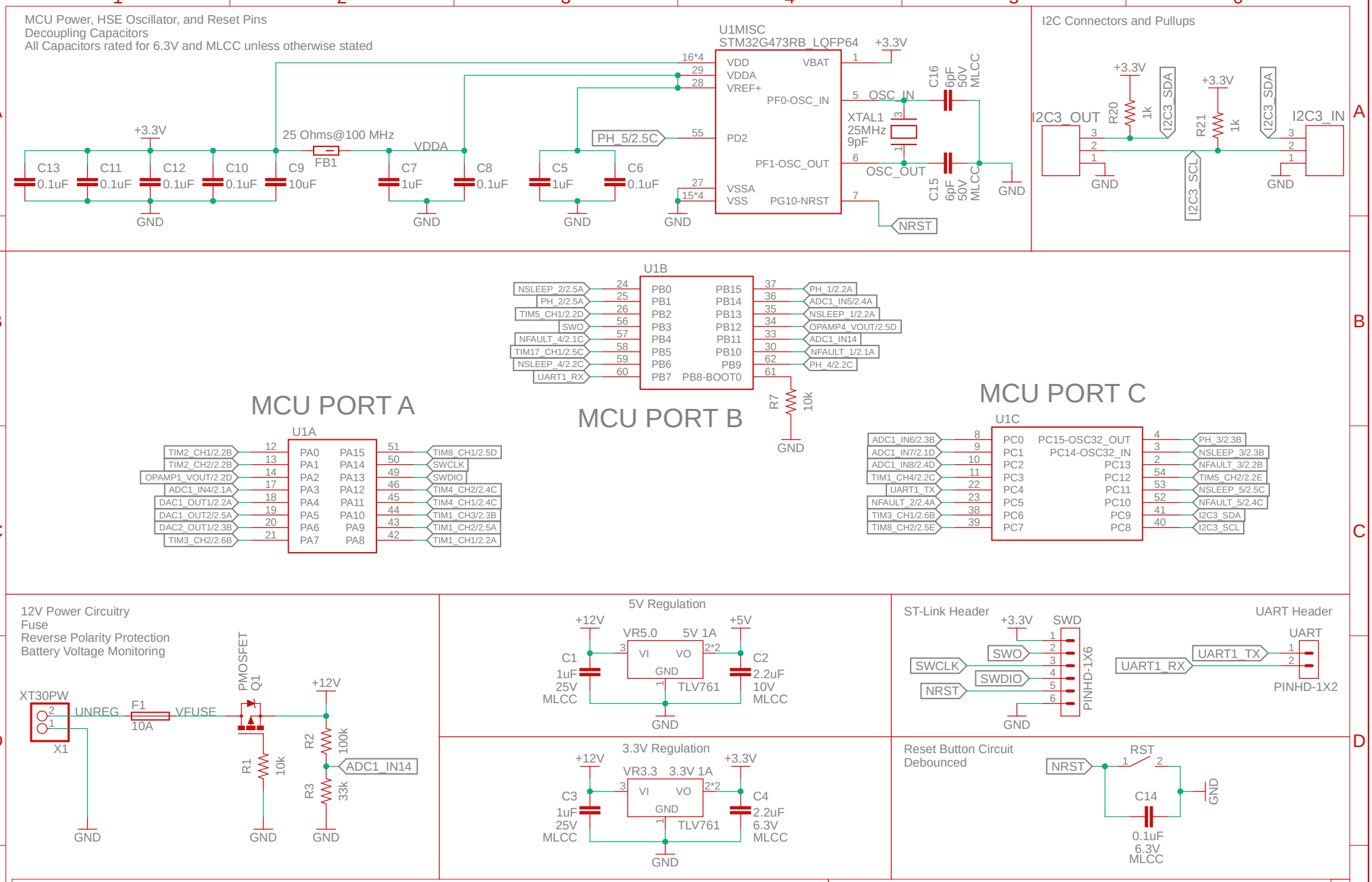

NOTES:

```
NOTE 1: TEMPERATURE RISE
OF VR1 IS 11.8C
 VDROP = VIN - VOUT
       = 12V - 5V
       = 7V
 PLOSS = VDROP x ILOAD
       = 7V x 0.05A
       = 0.35W
 TRISE = PLOSS x RJTB
       = 0.35W x 33.7C/W
       = 11.8C
```

```
NOTE 2: TEMPERATURE RISE
OF VR2 IS 88C
 VDROP = VIN - VOUT
       = 12V - 3.3V
       = 8.7V
 PLOSS = VDROP x ILOAD
       = 8.7V x 0.3A
       = 2.61W
 TRISE = PLOSS x RJTB
       = 2.61W x 33.7C/W
       = 88C
```

```
NOTE 3: I2C PULLUP
967 < RP < 1.77k
 RPMIN = (VCC - VOLMAX)/IOL
       = (3.3 - 0.4 V)/(3 mA)
       = 967 Ohm
 RPMAX = tR/(0.8473 x Cb)
       = (300 ns)/(0.8473 x 200 pF)
       = 1.77k
```

CAL POLY M.E.

TITLE:	Term Project v95		
Drawn By:	Col Cook	REV:	1.0
Date:	5/24/2025 4:44 PM	Sheet:	1/2