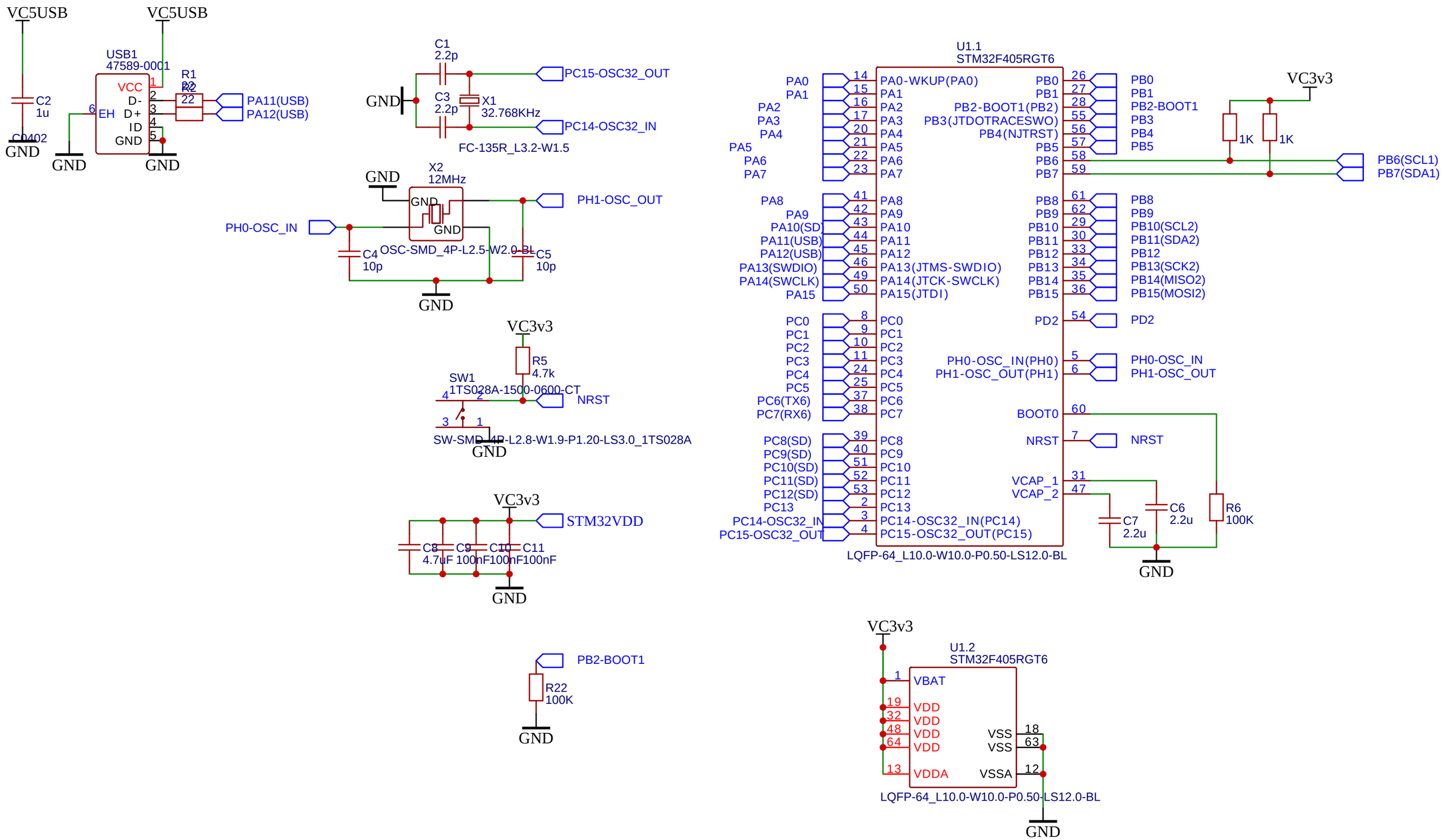

TITLE: STM32F405RG	REV: 1.0
EasyEDA — Company: Your Company	Sheet: 1/1
Date: 2020-06-12 Drawn By: pressl.alex	

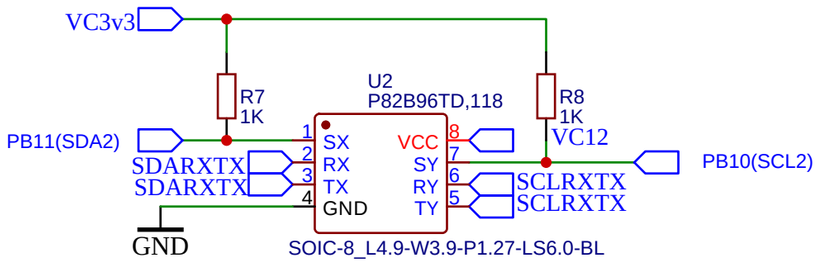

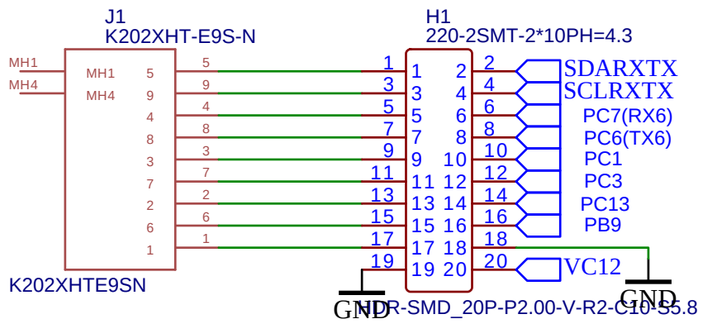

TITLE: Sheet_1		REV: 1.0
EasyEDA	Company: Your Company	Sheet: 1/1
	Date: 2020-06-12 Drawn By: pressl.alex	

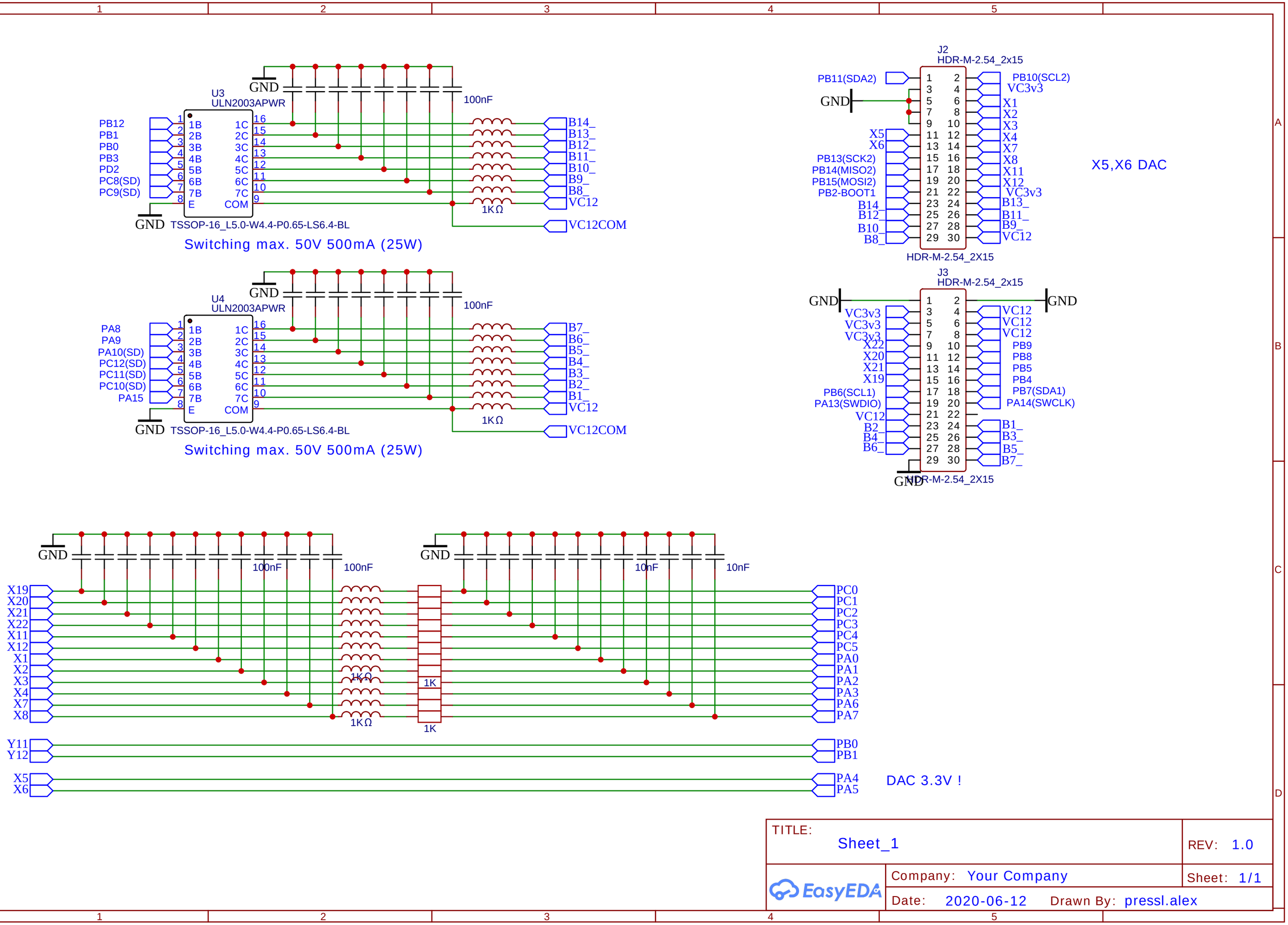

TITLE: Sheet_1		REV: 1.0
EasyEDA	Company: Your Company	Sheet: 1/1
	Date: 2020-06-12 Drawn By: pressl.alex	

DCDC PointOfLoad 2.5Mhz PWM IN: 10-17V 10W OUT: 3.3V 3A

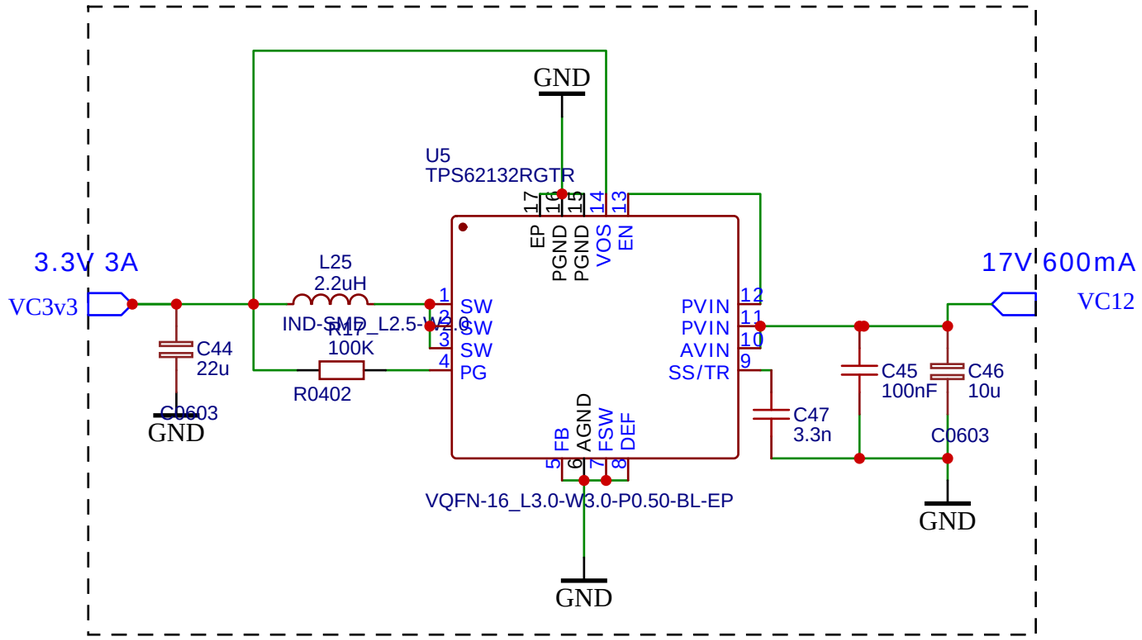

TITLE: Sheet_1		REV: 1.0
EasyEDA	Company: Your Company	Sheet: 1/1
	Date: 2020-06-13 Drawn By: pressl.alex	