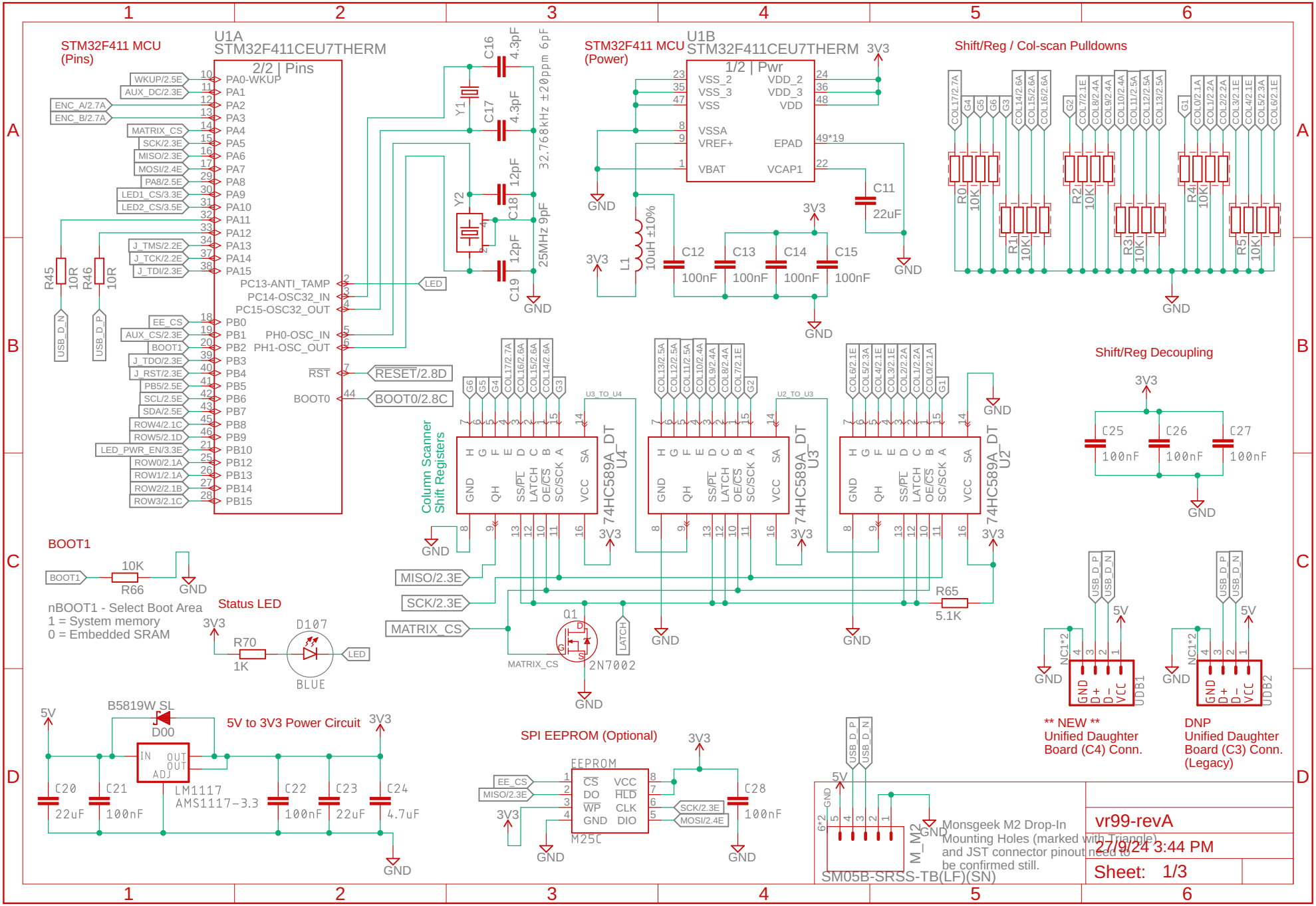
STM32F411 MCU (Pins)
U1A STM32F411CEU7THERM
2/2 | Pins
STM32F411 MCU (Power)
U1B STM32F411CEU7THERM
1/2 | Pwr
Shift/Reg / Col-scan Pulldowns
Shift/Reg Decoupling
Column Scanner Shift Registers
74HC589A_DT U4
74HC589A_DT U3
74HC589A_DT U2
BOOT1
nBOOT1 - Select Boot Area
1 = System memory
0 = Embedded SRAM
Status LED
5V to 3V3 Power Circuit
LM1117 AMS1117-3.3
SPI EEPROM (Optional)
EEPROM M25C
Monsgeek M2 Drop-In Mounting Holes (marked with Triangle) and JST connector pinout need to be confirmed still.
SM05B-SRSS-TB(LF)(SN)
** NEW ** Unified Daughter Board (C4) Conn.
DNP Unified Daughter Board (C3) Conn. (Legacy)
vr99-revA
27/9/24 3:44 PM
Sheet: 1/3

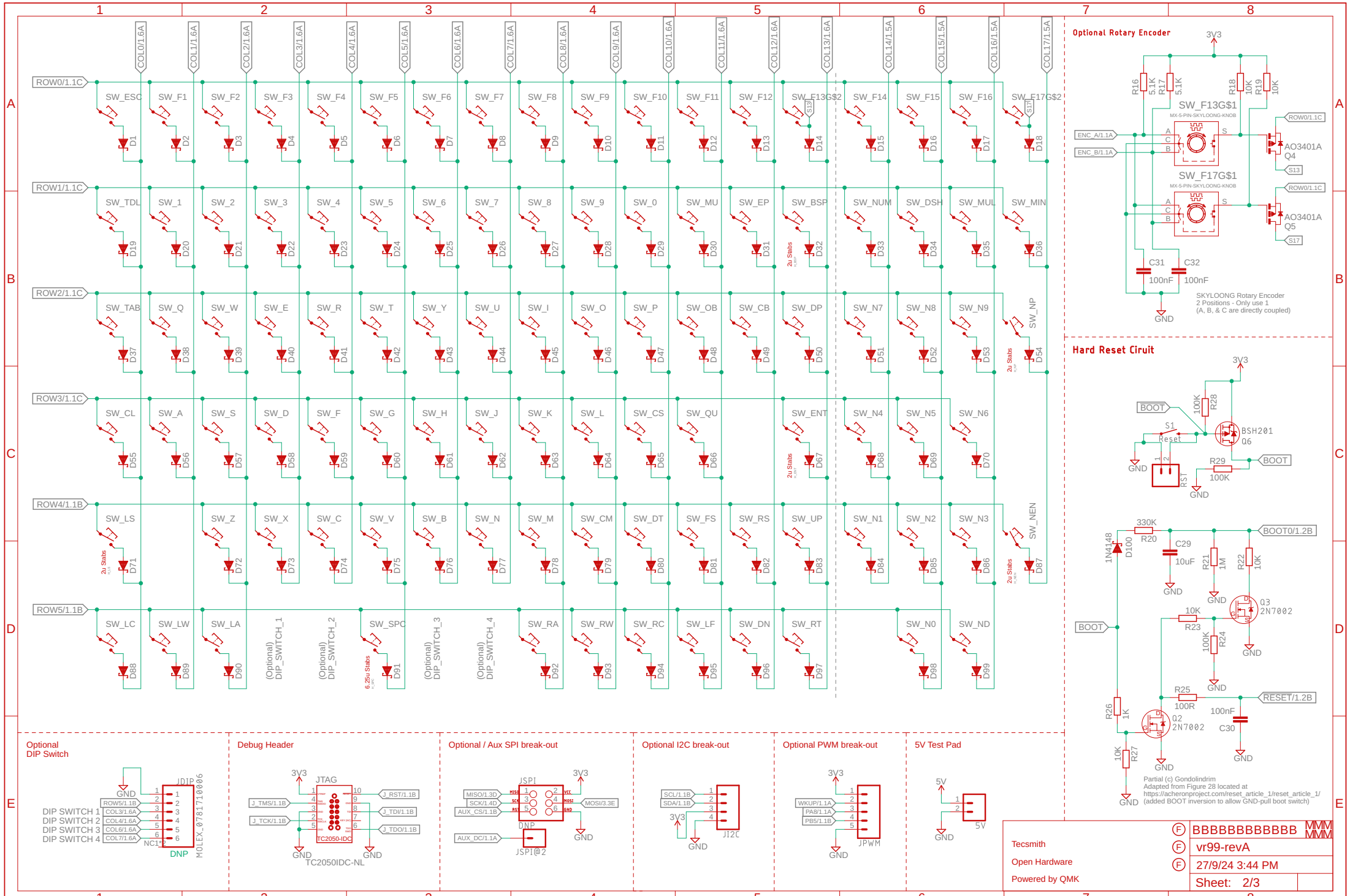
Optional Rotary Encoder
SW_F13G$1
SW_F17G$1
MX-5-PIN-SKYLOONG-KNOB
AO3401A Q4
AO3401A Q5
SKYLOONG Rotary Encoder
2 Positions - Only use 1
(A, B, & C are directly coupled)
Hard Reset Ciruit
BSH201 Q6
1N4148 D100
Q3 2N7002
Q2 2N7002
Partial (c) Gondolindrim
Adapted from Figure 28 located at
https://acheronproject.com/reset_article_1/reset_article_1/
(added BOOT inversion to allow GND-pull boot switch)
Optional DIP Switch
JDIP
MOLEX_0781710006
DIP SWITCH 1
DIP SWITCH 2
DIP SWITCH 3
DIP SWITCH 4
Debug Header
JTAG
TC2050-IDC
TC2050IDC-NL
Optional / Aux SPI break-out
JSPI
JSPI@2
Optional I2C break-out
JI2C
Optional PWM break-out
JPWM
5V Test Pad
Tecsmith
Open Hardware
Powered by QMK
BBBBBBBBBBBB
vr99-revA
27/9/24 3:44 PM
Sheet: 2/3

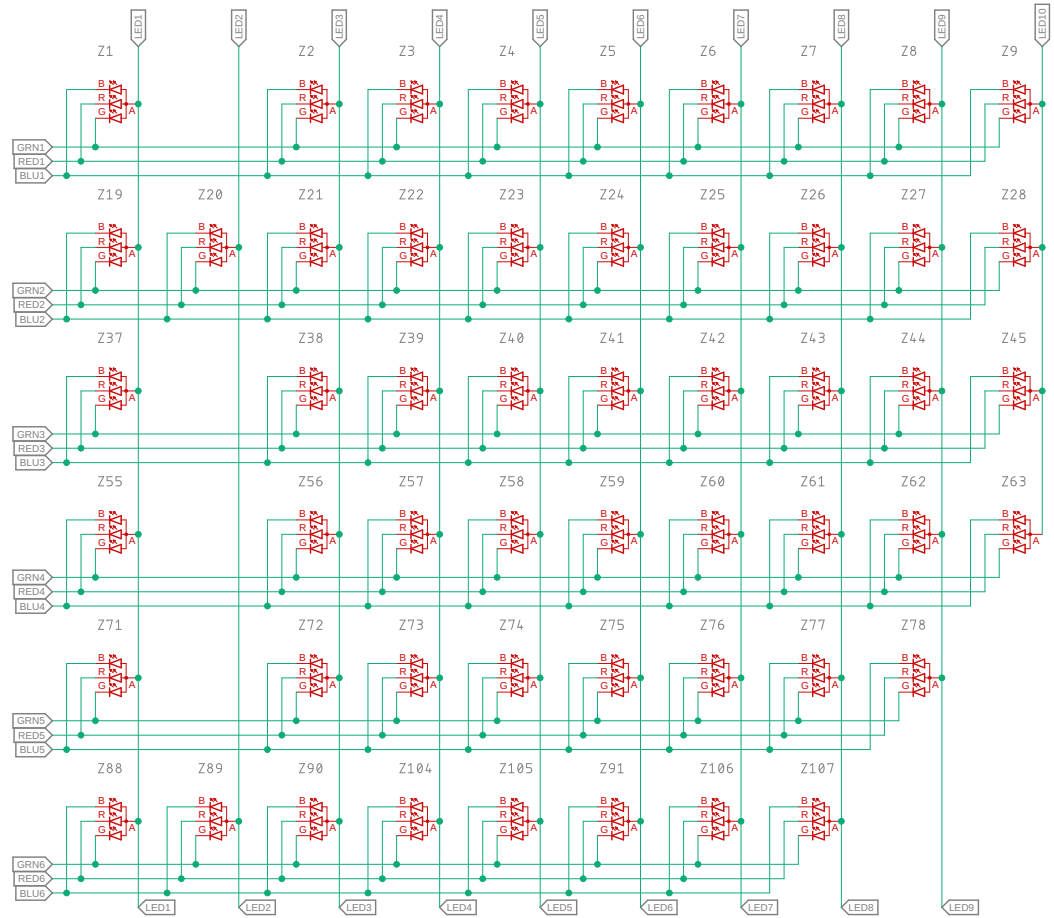

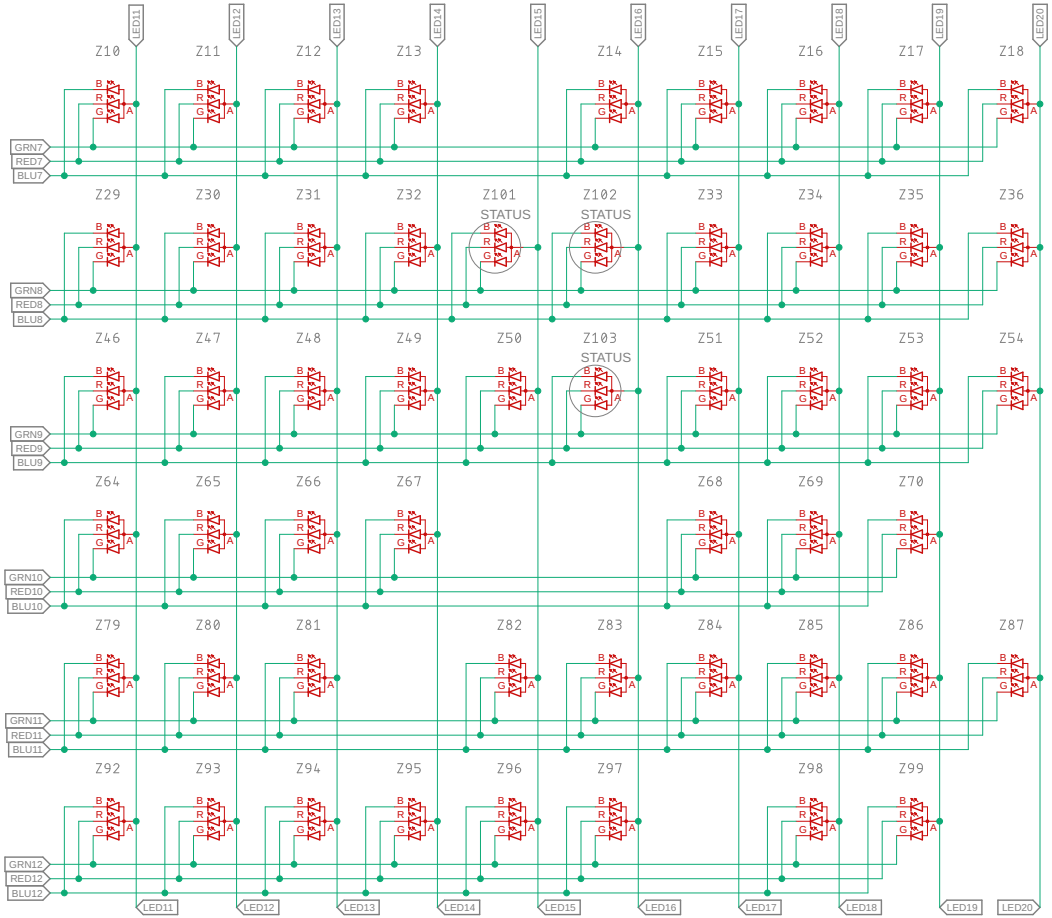

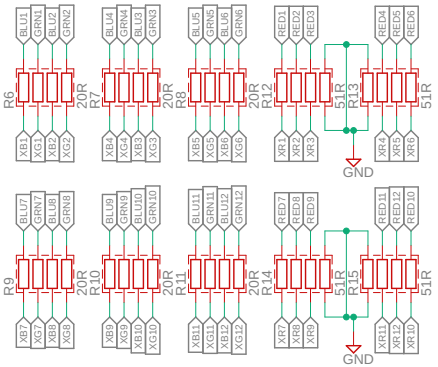

CHARLIE PIXEL DRIVERS

NOTE (to self)
There is no driver for the IS31FL3743B SPI
Also remember that each IC needs it's own
CS pin. This will make the driver a tad more
challanging to write. Good luck.
..or..
Replace this with the IS31FL3743A I2C variant.

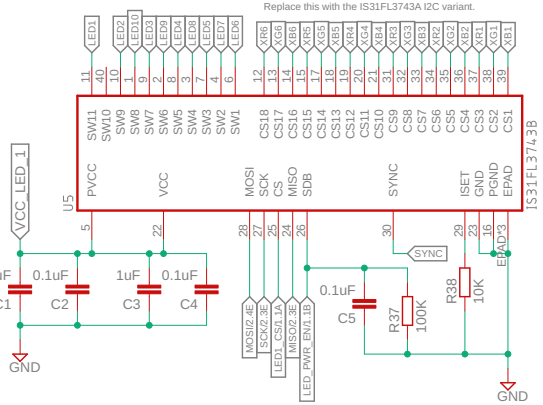

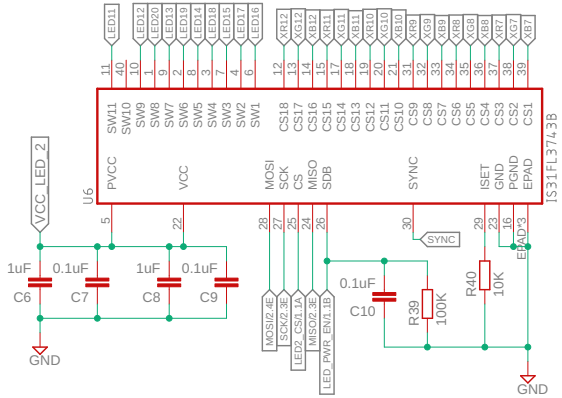

LED POWER SWITCHES

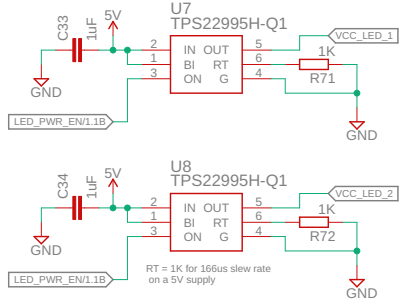

DNP / Not Used
I2C Pull-up

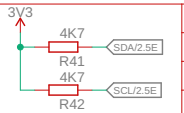

vr99-revA
27/9/24 3:44 PM
Sheet: 3/3