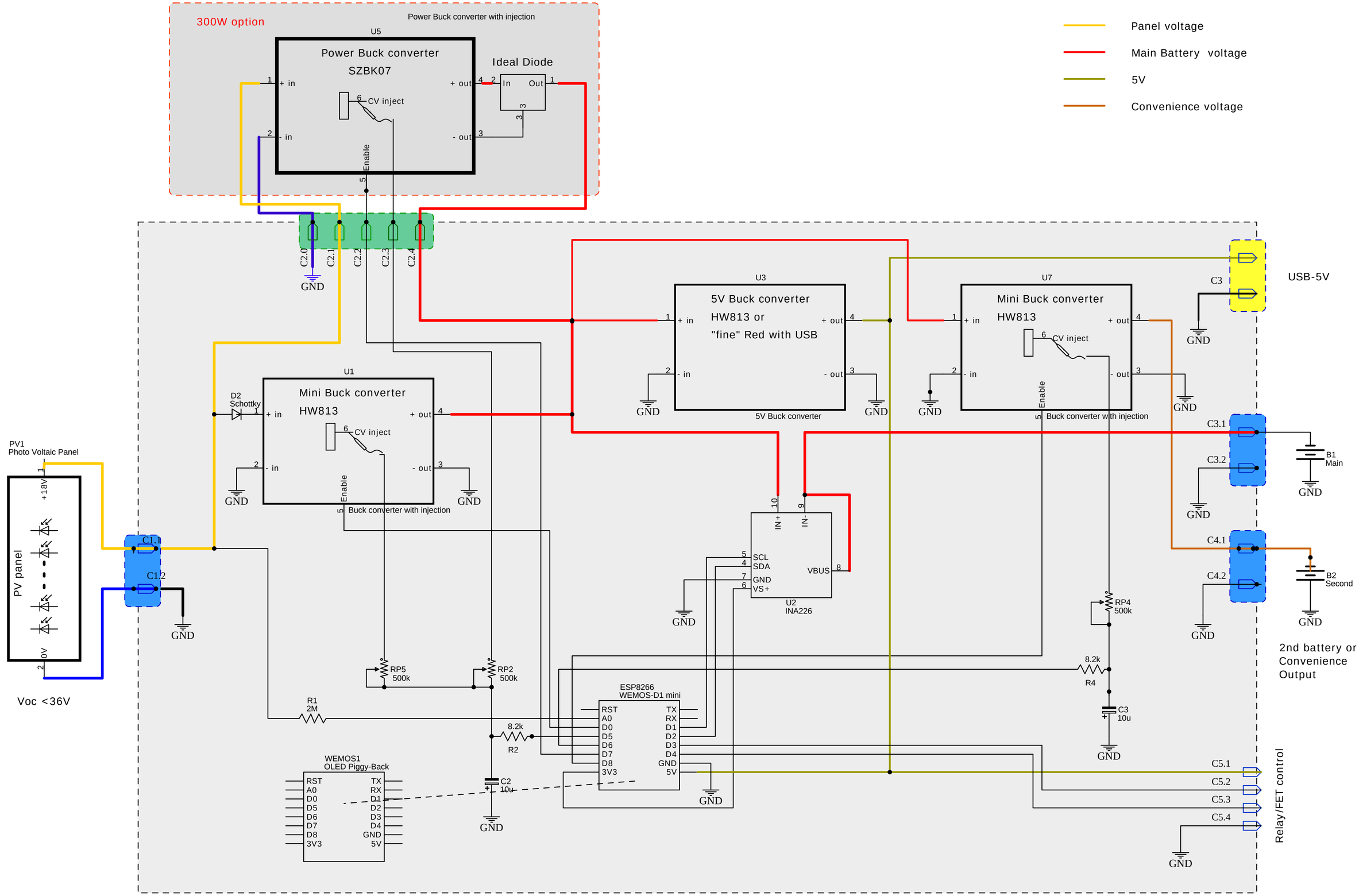

TITLE: Soft Power Universal Unit INA226	REV: 1.0
Company: DIY Solar	Sheet: 1/1
Date: 2021-01-03 Drawn By: Laszlo Lebrun	

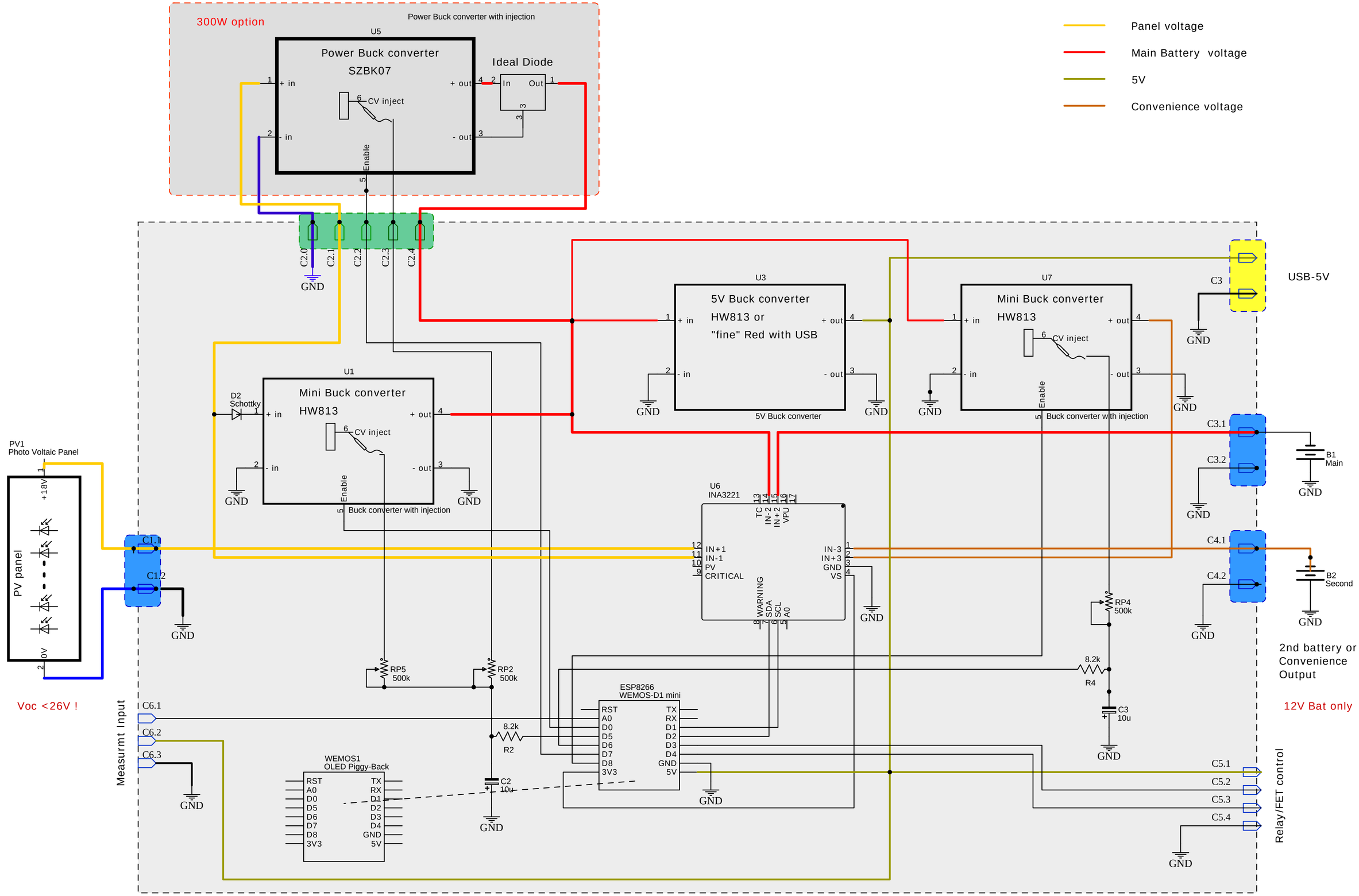

TITLE: Soft Power Universal Unit INA3221		REV: 1.0
EasyEDA	Company: DIY Solar	Sheet: 1/1
	Date: 2021-01-03 Drawn By: Laszlo Lebrun	

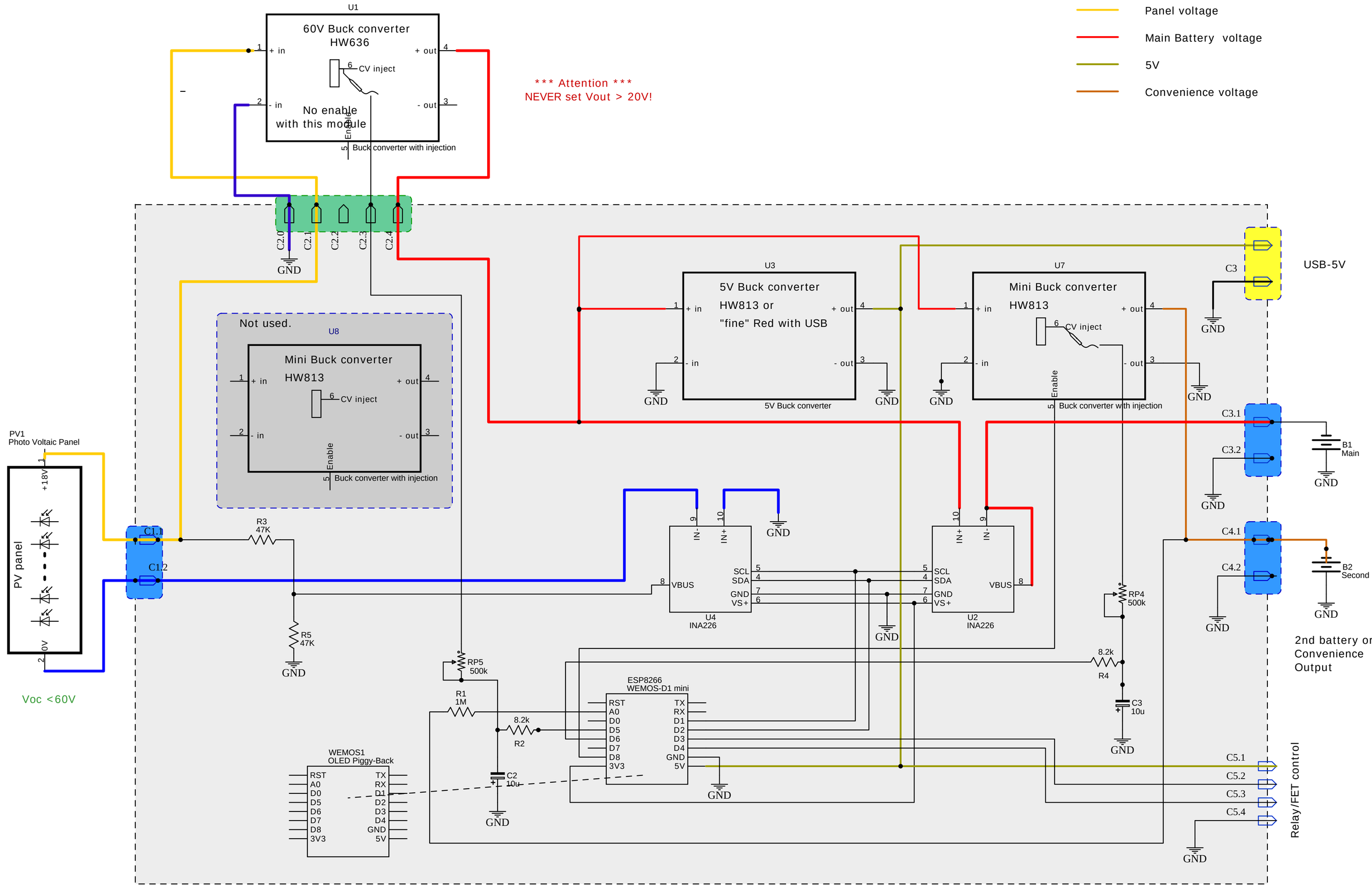

TITLE: Soft Power Univ. Unit 2xINA226 HV panel		REV: 1.0
EasyEDA	Company: DIY Solar	Sheet: 1/1
	Date: 2021-01-03 Drawn By: Laszlo Lebrun	

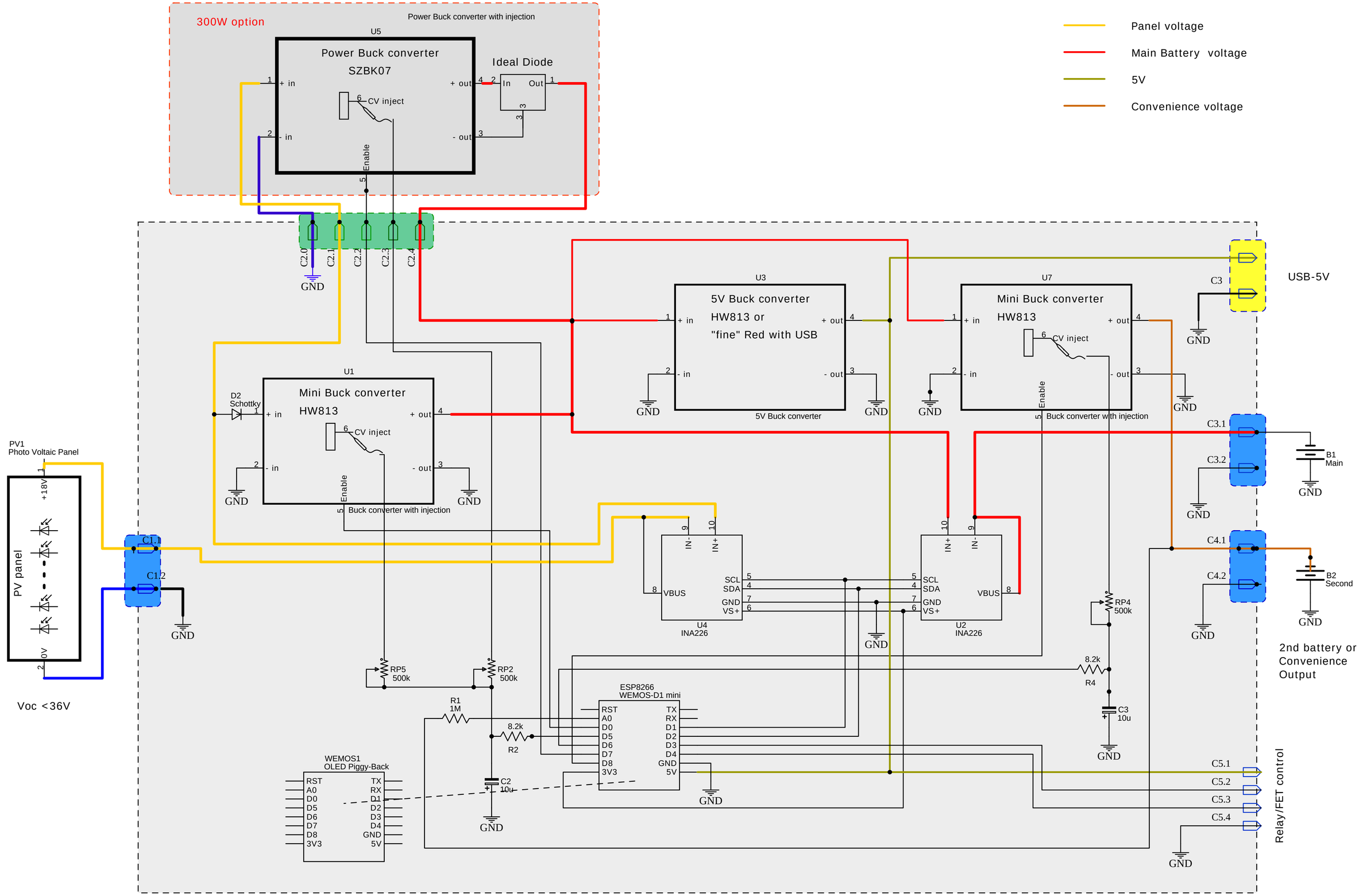

TITLE: Soft Power Universal Unit 2xINA226		REV: 1.0
EasyEDA	Company: DIY Solar	Sheet: 1/1
	Date: 2021-01-03 Drawn By: Laszlo Lebrun	