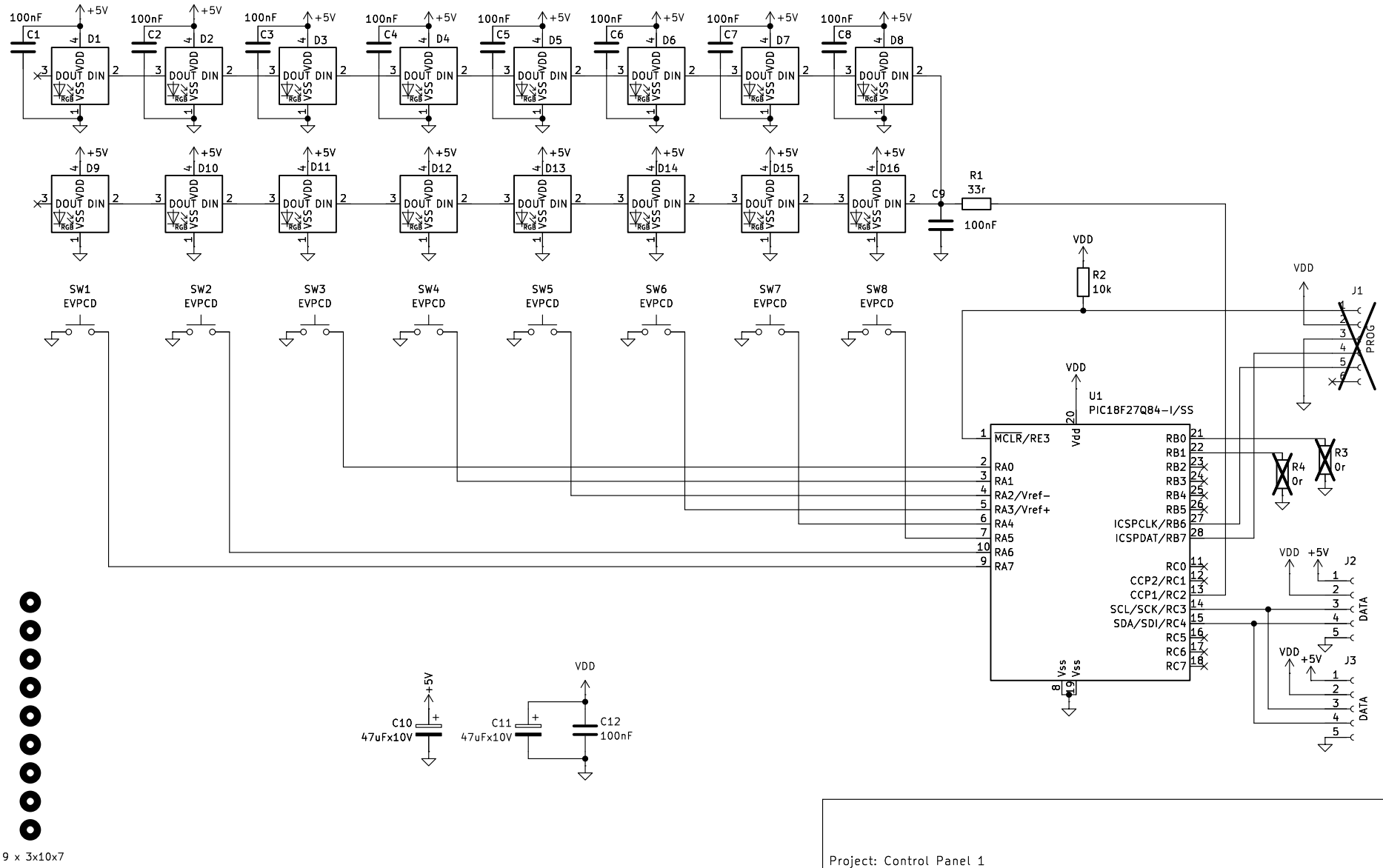


Project: Control Panel 1

**Teivaz**

Sheet: /

File: board2-buttons.kicad_sch

***Title: Board1 – Buttons***

| | | |
|---|---|---|
| Size: A4 | Date: 2026-03-01 | **Rev: 1** |
| KiCad E.D.A. 9.0.7 | | Id: 1/1 |