Design and Optimization of a Four-Wheeler Suspension System

Team Members:
D. Teja (ME23BT049)
M. Prem Sai (ME23BT037)
N. Mahesh (ME23BT035)

November 28, 2025

Contents

1 Introduction **4**

1.1 Project Overview 4

1.2 Problem Statement 4

2 Design Methodology and Considerations **5**

2.1 Structural Integrity 5

2.2 Ride Comfort and Ergonomics 5

2.3 Geometry and Stability 5

3 Modeling and Component Assembly **6**

3.1 The Damper (Mono-Tube) 6

3.2 The Helical Spring 7

3.3 Double Wishbones (A-Arms) 8

4 Calculations and Analytical Design **9**

4.1 Vehicle Data 9

4.2 Stiffness Calculations 9

4.3 Shear Stress Analysis 9

4.4 Geometric Dimensioning 10

5 Fatigue and Finite Element Analysis (FEA) **11**

5.1 Fatigue Analysis 11

5.2 Finite Element Analysis Results 11

6 Conclusion **12**

7 References **12**

1 Introduction

1.1 Project Overview

This report details the analysis and design of a four-wheeler suspension system, specifically focusing on a double-wishbone configuration integrated with a helical coil spring. The suspension system is a critical component of any vehicle, acting as the interface between the road and the chassis.

The primary objective of this project is to analyze and design a suspension system that can withstand both static loads (the weight of the vehicle itself) and dynamic loads (shocks induced by uneven road surfaces). By performing fatigue and stress analysis using Design of Machine Elements (DME) data, the team aims to propose an optimized design that effectively balances structural strength with ride comfort.

As seen in Figure **??**, the system utilizes a double-wishbone architecture. This setup is widely favored in passenger vehicles because it allows for superior control over wheel movement and alignment compared to simpler systems.

1.2 Problem Statement

Analyze and design a four-wheeler suspension consider static and dynamic loads. Perform fatigue and stress analysis using DME data. Propose an optimized design balancing strength and ride comfort.

The core challenge lies in enhancing the performance of the suspension without compromising safety, comfort, or the ability to manufacture the parts cost-effectively. To achieve this, the project evaluates several key performance parameters:

- **Stiffness:** How resistant the spring is to compression.
- **Damping:** How quickly the system stops bouncing after a bump.
- **Fatigue Life:** How many cycles of compression the system can endure before failing.

2 Design Methodology and Considerations

When designing a suspension system, engineers must balance conflicting requirements. For example, a very stiff spring handles heavy loads well but makes the ride uncomfortable for passengers. The following considerations guided this design:

2.1 Structural Integrity

The safety of the vehicle depends on the suspension's ability to resist failure. The design employs high-strength, fatigue-resistant materials for critical components like the spring, damper, and wishbones. Furthermore, joints and contact points are designed specifically to avoid stress concentrations—areas where force gathers and creates weak points. Adequate safety factors are applied to ensure the system can handle loads significantly higher than expected during normal operation.

2.2 Ride Comfort and Ergonomics

Ride comfort is determined by how the system manages energy. The spring stiffness is tuned to absorb bumps, while the damper coefficient is set to control oscillations. *Classroom Example:* Think of the spring as a mattress that cushions you, and the damper as a door closer that prevents the mattress from bouncing up and down endlessly. Additionally, the design ensures a minimum ride height to prevent the vehicle from "bottoming out" (hitting the ground) on rough terrain, while also allowing for ergonomically safe entry and exit for passengers.

2.3 Geometry and Stability

The geometry of the wishbone arms is calculated to achieve specific wheel travel paths. Proper pivot placement ensures smooth motion and uniform load distribution. This geometry is crucial for maintaining the vehicle's center of gravity and handling performance during turns, braking, and acceleration.

3 Modeling and Component Assembly

A complete Computer-Aided Design (CAD) model was developed to visualize the interaction between components.

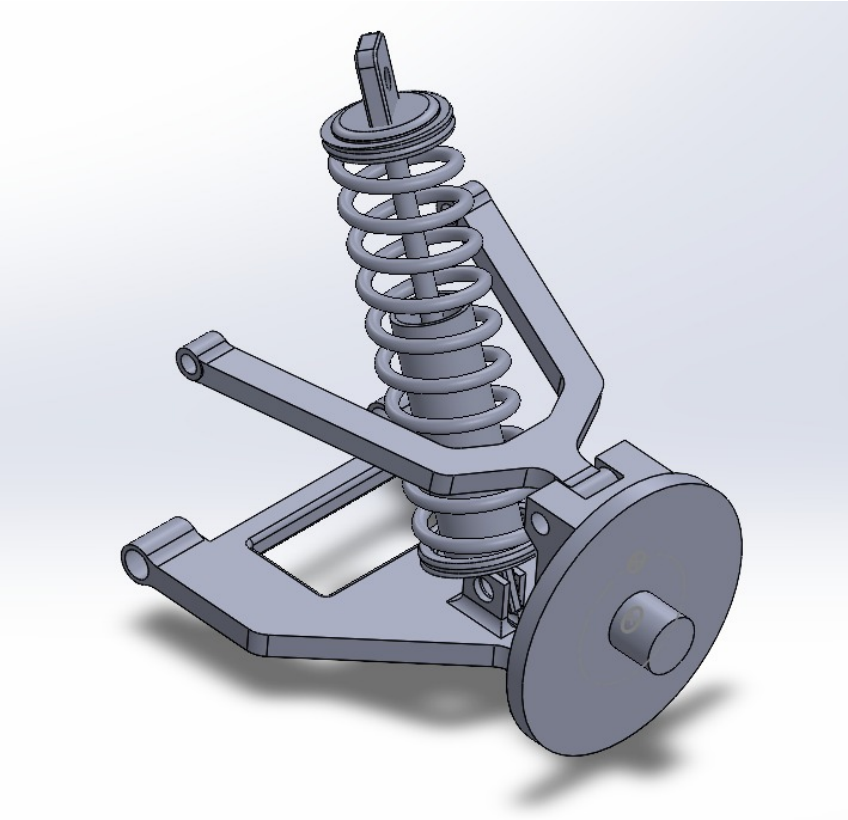

Figure 1: Full CAD Assembly of the Double-Wishbone Suspension.

The assembly helps in understanding the kinematics—how the parts move in relation to one another. It illustrates how the spring and damper compress and extend while the upper and lower wishbones control the wheel's alignment.

3.1 The Damper (Mono-Tube)

The damper acts as the energy dissipater. It is modeled as a mono-tube design using high-strength steel or aluminum alloys. Its primary function is to dampen the oscillations of the spring, improving ride stability and reducing vibrations felt by the driver.

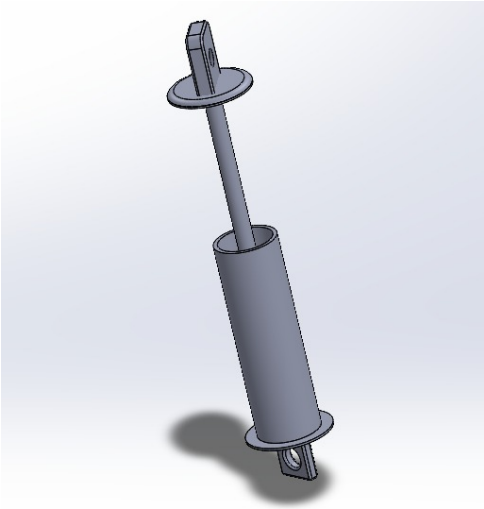

Figure 2: CAD Model of the Mono-Tube Damper.

3.2 The Helical Spring

The spring is the primary load-bearing component. Several materials were evaluated:

- **Chrome-Silicon (Cr-Si) Steel:** Chosen for its high strength and excellent fatigue resistance, making it ideal for high-stress applications.
- **Chrome-Vanadium (Cr-V) Steel:** Offers good toughness and endurance limits.
- **Spring Steel (High-Carbon):** A cost-effective option for standard systems.

The spring supports the vehicle weight and absorbs road shocks.

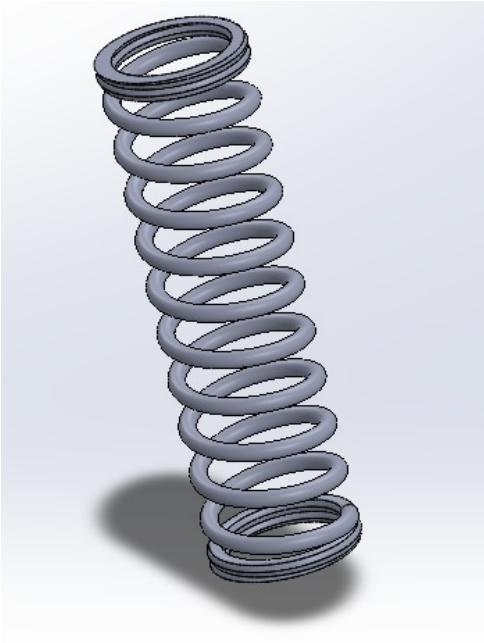

Figure 3: CAD Model of the Helical Spring.

3.3 Double Wishbones (A-Arms)

The suspension utilizes two "A" shaped arms.

- **Upper Wishbone:** Controls the upper movement of the wheel and provides a mounting point for the damper/spring assembly.
- **Lower Wishbone:** Guides vertical wheel travel and carries the main suspension load.

These are typically manufactured from forged steel or aluminum alloys (e.g., 6061-T6) to ensure rigidity.

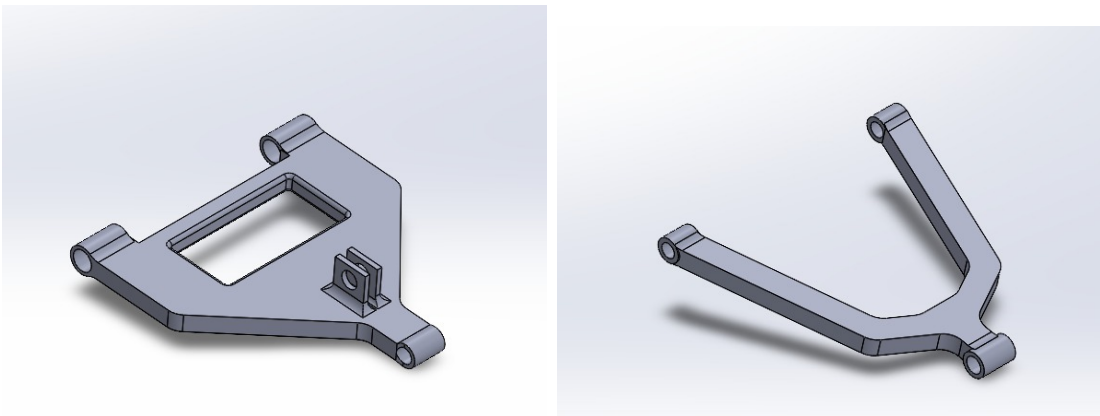

Figure 4: Lower Wishbone (Left) and Upper Wishbone (Right).

4 Calculations and Analytical Design

To ensure the design is valid, mathematical calculations were performed based on a reference vehicle: the Toyota Fortuner.

4.1 Vehicle Data

- **Gross Vehicle Weight (W_{gross}):** 2510 kg.
- **Weight on one wheel (w):** Assuming equal distribution, $w = 2510/4 = 627.5$ kg.
- **Sprung Mass (m_s):** This is the mass actually supported by the spring (excluding tires/brakes).

$$m_s = \frac{w}{g} = \frac{627.5}{9.81} \approx 64.03 \text{ kg} \tag{1}$$

4.2 Stiffness Calculations

The design targets a ride frequency of 1 Hz, which is standard for passenger cars to avoid motion sickness.

Wheel Rate (K_w): The stiffness of the suspension at the wheel.

$$K_w = 4\pi^2 f_n^2 m_s = 4\pi^2 (1)^2 (64.03) \approx 2527.80 \text{ N/m} \tag{2}$$

Spring Rate (K_s): Because the spring is mounted at an angle and on a lever arm (the wishbone), the spring must be stiffer than the wheel rate. Using a Motion Ratio (TR) of 0.6 and an inclination angle (θ) of 30°:

$$K_s = \frac{K_w}{TR^2 \times \cos(\theta)} = \frac{2527.80}{0.6^2 \times 0.866} \approx 8108.16 \text{ N/m} \tag{3}$$

4.3 Shear Stress Analysis

Using Chrome-Silicon Steel ($S_{ut} = 2000$ MPa), the maximum allowable shear stress (τ_{max}) is determined via the Tresca Failure Criterion.

The calculation is as follows:

$$\tau_{max} = 0.5 \times S_{ut} = 1000 \text{ MPa} \tag{4}$$

4.4 Geometric Dimensioning

The geometric parameters were calculated using Wahl's Stress Correction Factor (K), assuming a Spring Index (C) of 8.

Wahl's Factor (K):

$$K = \frac{4C-1}{4C-4} + \frac{0.615}{C} = 1.184 \tag{5}$$

Axial Spring Force (F_s): The force at static equilibrium is calculated considering the motion ratio and installation angle:

$$F_s = \frac{w \cdot g}{TR\cos(\theta)} \approx 1207.6 \text{ N} \tag{6}$$

Wire Diameter (d) and Mean Coil Diameter (D): Rearranging the shear stress equation yields the ratio for geometric dimensioning:

$$\frac{D}{d^3} = \frac{\tau_{max}\pi}{K \cdot 8 \cdot F_s} \approx 0.27 \text{ mm}^{-2} \tag{7}$$

Solving for d (with $C = 8$):

$$d = \sqrt{\frac{8}{0.27}} \approx 5.44 \text{ mm} \tag{8}$$

Consequently, the mean coil diameter is:

$$D = C \times d \approx 43.52 \text{ mm} \tag{9}$$

Active Coils (N) and Solid Length (L_s): The number of active coils required to achieve the target stiffness (K_s) is:

$$N = \frac{Gd^4}{8D^3K_s} \approx 13.03 \text{ coils} \tag{10}$$

The solid length (L_s) is determined to be 81.76 mm.

5 Fatigue and Finite Element Analysis (FEA)

5.1 Fatigue Analysis

Suspensions undergo constant cycling. To ensure the spring won't snap over time, a fatigue analysis was performed using the Modified Goodman Criterion.

- **Maximum Force (F_{max}):** 1267.6 N.
- **Minimum Force (F_{min}):** 962.27 N.

From these, the Mean Force ($F_m = 1084.9$ N) and Alternating Force ($F_a = 122.7$ N) were found. Converting these forces into shear stresses provided the inputs for the Goodman equation:

$$\frac{\tau_a}{S_e} + \frac{\tau_m}{S_{ut}} = \frac{1}{n} \tag{11}$$

Solving this yielded a **Factor of Safety (n) of 1.44**, indicating a safe design.

5.2 Finite Element Analysis Results

The design was validated using SolidWorks simulation tools.

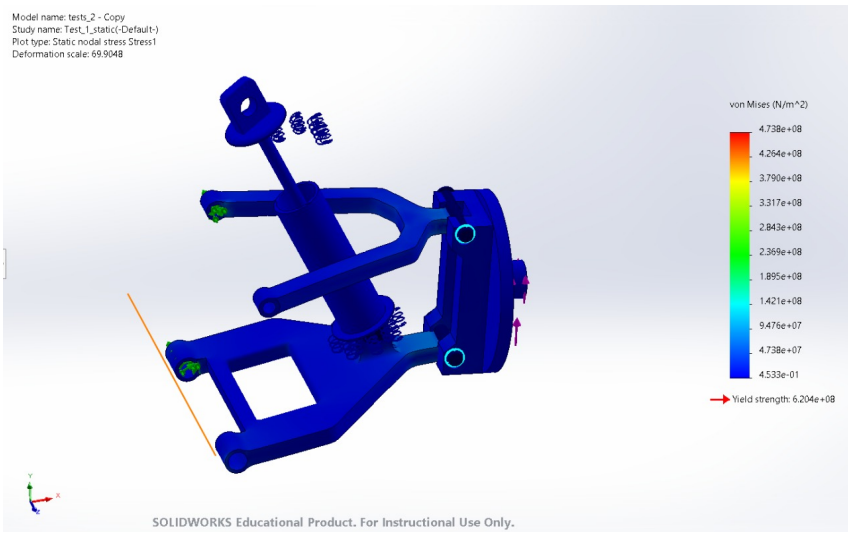

Figure 5: Von Mises Stress Distribution on the Suspension Assembly.

The Von Mises stress plot (Figure 5) highlights areas of maximum stress. The simulation showed that the maximum stresses induced were within the yield strength limits of the material.

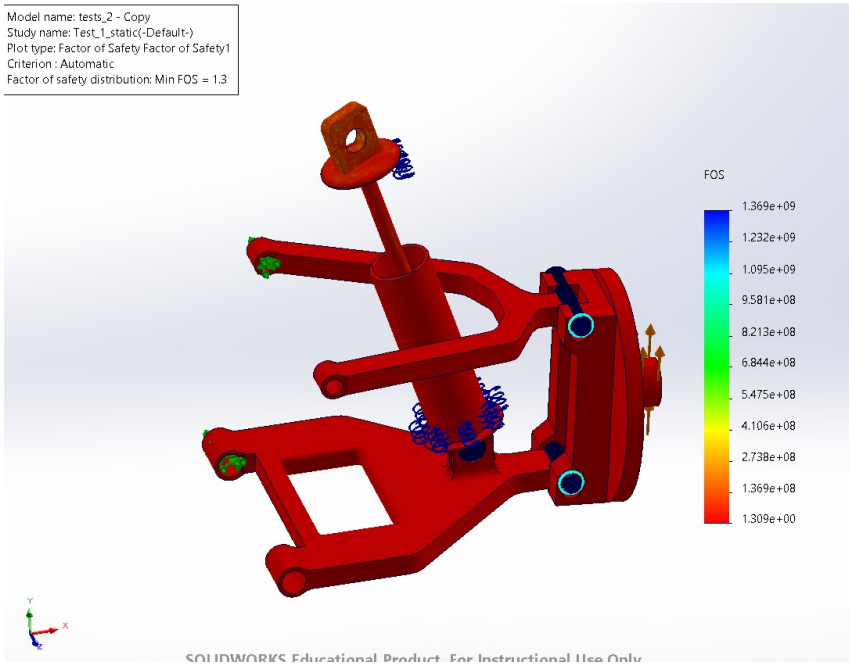

Figure 6: Factor of Safety Distribution Plot.

The FEA results confirmed a minimum Factor of Safety of 1.3 for the assembly. This aligns closely with the theoretical calculation of 1.44, validating the mathematical model.

6 Conclusion

The suspension system was successfully designed and optimized using a helical spring, damper, and double-wishbone geometry. The analytical calculations for spring stiffness and geometry were validated through both theoretical fatigue analysis and computational FEA simulations.

The final design achieves a balanced combination of ride comfort, stability, and structural strength. The calculated safety factors indicate that the system is suitable for real-world vehicle conditions, specifically for a vehicle in the class of a Toyota Fortuner.

7 References

1. Shigley's Mechanical Engineering Design.

2. Automotive Suspension Manuals.

3. Toyota Fortuner Combined Spec Sheet: https://www.toyotabharat.com/documents/brochures/fortuner-mmc/combined-specsheet.pdf.

4. Research Paper: https://www.ijcrt.org/papers/IJCRT2502631.pdf.

5. YouTube Resource 1: https://youtu.be/S_GraRRbxLg?si=6J07aS1lmIBHZagr.

6. YouTube Resource 2: https://youtu.be/3CmynYyGpnY?si=Gk4DMdzRS7vpd2nl.