A PROJECT *REPORT ON*

INDUSTRIAL PREDECTIVE MAINTENANCE USING INTERNET OF THINGS

Submitted to

ACHARYA NAGARJUNA UNIVERSITY

In partial fulfilment for the award of the degree

Of

BACHELOR OF TECHNOLOGY

In

ELECTRONICS & COMMUNICATION ENGINEERING

By

G. DIVYA TEJA	**(Y21ECE036)**
G. VENKATESH	**(Y21ECE048)**
CH. RAMANJI	**(Y21ECE021)**
I. SIVASAI LAKSHMIREDDY	**(Y21ECE054)**

Under The Guidance of

Ms. R. LAKSHMI PARVATHI, M. Tech
ASSISTANT PROFESSOR

DEPARTMENT OF

ELECTRONICS & COMMUNICATION ENGINEERING

CHALAPATHI INSTITUTE OF ENGINEERING AND TECHNOLOGY

CHALAPATHI NAGAR, LAM, GUNTUR-522034

APRIL 2025

BONAFIDE CERTIFICATE

This is to certify that the project work entitled as **"INDUSTRIAL PREDECTIVE MAINTENANCE USING INTERNET OF THINGS"** submitted by **G. DIVYA TEJA** (Y21ECE036), **G. VENKATESH** (Y21ECE048), **CH. RAMANJI** (Y21ECE021), **I. SIVASAI LAKSHMIREDDY** (Y21ECE054) partial fulfilment of the requirements of the Degree of Bachelor of Technology in Electronics and Communication Engineering is record of Bonafide work carried out under my and supervision during this year 2024-2025.

PROJECT GUIDE

Ms. R. LAKSHIMI PARVATHI, M. Tech
ASST.PROFESSOR
DEPARTMENT OF ECE
CIET, LAM, GUNTUR

HEAD OF THE DEPARTMENT

Dr. K. VENKATA RAMARAO, Ph. D
PROFESSSOR & HOD
DEPARTMENT OF ECE
CIET, LAM, GUNTUR

PRINCIPAL

Dr. M. CHANDRA SEKHAR, M. Tech, M.E, Ph. D, MISTE
PROFESSOR
CIET, LAM, GUNTUR

ACKNOWLEDGEMENTS

We take this opportunity to express our deep gratitude to all the people who have extended their cooperation in various ways during our project work. It is our pleasure to acknowledge the help of all those individuals.

We are indebted to our guide **Ms. R LAKSHIMI PARVATHI, M. Tech**, Assistant professor in the department of Electronics and Communication for his guidance and help throughout the development of this Project work by providing us with required information. Without his guidance, cooperation and encouragement, we couldn't have learnt many new things during our project tenure.

We express our sincere thanks to **Dr. K. VENKATA RAMARAO, Ph. D** Head of the Electronics and Communication department for his encouragement and valuable guidance in bringing shape to this project.

We would like to thank **Dr. M. CHANDRA SEKHAR, M. Tech, M.E, Ph. D, MISTE** Principal, Chalapathi Institute of Engineering and Technology for providing required resources to complete this project work.

We express our deepest gratitude to our President **Sri Y.V. ANJANEYULU,**
and our Secretary & Correspondent **Sri Y. SUJITH KUMAR** for their valuable guidance and blessings.

We also express our sincere thanks to faculty of Electronics and Communication Engineering department for providing assistance throughout our project. Finally, we would like to thank our parents and friends for being supportive all the time, and we are very much obliged to them.

BY

G. DIVYA TEJA	**(Y21ECE036)**
G. VENKATESH	**(Y21ECE048)**
CH. RAMANJI	**(Y21ECE021)**
I. SIVASAI LAKSHMIREDDY	**(Y21ECE054)**

CONTENTS

Page No

CERTIFICATE ii

DECLARATION BY THE CANDIDATE

ACKNOWLEDGEMENTS iii

ABSTRACT xii

List of Figures xiii

List of Tables xiv

List of Symbols xv

Chapter 1: 1. Introduction (1-10)

1.1 The Shift from Traditional Maintenance Strategies 1

1.2 Technological Advancements Driving PDM 1

1.3 The Role of Artificial Intelligence in PdM 2

1.4 Benefits of Industrial Predictive Maintenance 2

1.5 PdM in Various Industries 3

1.6 Challenges and Future Outlook 3

1.7 existing system 3

1.8 Technological and Data-Related Disadvantages 4

1.8.1 Data Quality and Integration Issues 4

1.8.2 High Dependency on Machine Learning Models 4

1.8.3 Scalability Issues 4

1.9 Financial and Operational Disadvantages 5

1.9.1 High Initial and Ongoing Costs 5

1.9.2 Complexity of Implementation and Operation 5

1.9.3 Limited Expertise and Skill Gaps 5

1.10 Performance and Trust Issues 6

1.10.1 False Positives and Negatives 6

1.10.2 Lack of Standardization 6

1.11 Conclusion 6

1.12 proposed system 6

1.13 Proposed System Overview 7

1.13.1 Proposed System Overview 7

1.13.2 Edge Computing for Real-Time Analytics 7

1.13.3 Cloud-based Analytics and AI Models 7

1.13.4 Integration with Enterprise Systems 8

1.13.5 User-friendly Dashboards and Reporting Too 8

1.14 Reduced Unplanned Downtime 8

1.15 Cost Savings 8

1.16 Improved Asset Longevity 9

1.17 Enhanced Safety and Risk Management 9

1.18 Optimized Resource Utilization 9

1.19 Scalable and Flexible

Chapter 2: LITERATURE SURVAY (11-20)

2.Introduction 11

2.1 Fundamentals of Predictive Maintenance 11

2.1.1 Definition and Concept 11

2.1.2 Historical Development 11

2.2 Key Technologies in Predictive Maintenance 11

2.2.1 Internet of Things (IoT) 11

2.2.2 Machine Learning (ML) and Artificial Intelligence (AI) 12

2.2.3 Data Analytics and Statistical Techniques 12

2.2.4 Cloud Computing and Edge Computing 12

2.3 Machine Learning Techniques for Predictive Maintenance 12

2.3.1 Supervised Learning 12

2.3.2 Unsupervised Learning 12

2.3.3 Deep Learning 13

2.4 Real-World Applications of Predictive Maintenance 13

2. 4.1 Manufacturing Industry 13

2.4.2 Energy and Utilities Sector 13

2.4.3 Transportation and Logistics 13

2.4.4 Aerospace 13

2.5 Challenges and Limitations of Predictive Maintenance 13

2.5.1 Data Quality and Reliability 14

2.5.2 High Initial Investment 14

2.5.3 Integration Challenges 14

2.5.4 Skills and Expertise 14

2.5.5 Ethical and Privacy Concerns 14

2.6 INPUT DEVICE 14

2.7 Sensors 14

2.7.1 Vibration Sensors (Accelerometers) 14

2.7.2 Temperature Sensors 15

2.7.3 Pressure Sensors 15

2.7.4 Humidity Sensors 15

2.7.5 Acoustic Sensors (Ultrasonic Sensors) 15

2.8 IoT Devices (Internet of Things) 16

2.9 Key IoT Devices in Predictive Maintenance 16

2.9.1 Edge Devices 16

2.9.2 Gateway Devices 16

2.10 Data Acquisition Systems (DAQ) 16

2.10.1 Key Features of DAQ Systems 16

2.11 Machine Vision Systems 17

2.12 Key Features of Machine Vision in Predictive Maintenance 17

2.13 Advanced Input Devices 17

2.14 OUTPUT DEVICE 17

2.14.1 Alarms and Alert Systems 17

2.15 Control System Integration 18

2.15.1 Supervisory Control and Data Acquisition (SCADA) Systems 18

2.15.2 Programmable Logic Controllers (PLCs) 19

2.16 Mobile Devices and Tablets 19

2.16.1 Mobile Notifications 19

2.16.2 Mobile Dashboards and Reporting 19

2.17 Human-Machine Interface (HMI) 19

2.17.1 Touchscreen Monitors 20

2.17.2 Customizable Dashboards 20

2.18 Reports and Documentation 20

2.18.1 Automated Reports 20

2.18.2 Maintenance Logs 20

Chapter 3: BLOCK DIAGRAM AND EXPLANATION (21-58)

3.1 COMPONENTS 21

3.1.1 Power Supply 21

3.1.2 Transformer 22

3.2 Rectifier 22

3.2.1 Halfwave rectifier 23

3.2.2 Full wave rectifier 23

3.2.3 Bridge rectifier 24

3.3 Filter Capacitor 24

3.4 Voltage Regulator 25

3.5 Circuit diagram 26

3.6 IC 7805 26

3.7 LCD 26

3.7.1 Features 27

3.7.2 Shapes and sizes 28

3.8 Electrical block diagram 29

3.9 Power supply for lcd driving 29

3.10 PIN Description 29

3.11 Control lines 30

3.12 Entering Text 32

3.13 DHT11 34

3.13.1 Overview of Predictive Maintenance (PDM) 34

3.13.2 The Importance of Predictive Maintenance 34

3.13.3 How Sensors Play a Role in PDM 35

3.14 DHT11 Sensor Overview 35

3.14.1 Features of DHT11 35

3.14.2 How the DHT11 Works 35

3.15 Role of DHT11 in Industrial Predictive Maintenance 36

3.15.1 Impact of Temperature and Humidity on Industrial Equipment 36

3.15.2 DHT11 in Environmental Monitoring for PDM 36

3.15.3 Integration with IoT for Real-time Data Collection 36

3.15.4 Machine Learning Integration for Predictive Analytics 37

3.15.5 Use Cases in Various Industries 37

3.16 Advantages and Limitations of the DHT11 Sensor 37

3.17 Future Directions 38

3.18 CLOUD 39

3.18.1 Understanding Predictive Maintenance 39

3.19 Cloud Computing in Industrial Predictive Maintenance 40

3.20 Key Components of Cloud-Enabled PDM Systems 40

3.21 Benefits of Cloud-Based Predictive Maintenance 41

3.21.1 Scalability 41

3.21.2 Real-Time Data Processing 41

3.21.3 Improved Collaboration and Remote Access 41

3.21.4 Reduced IT Infrastructure Costs 41

3.21.5 Enhanced Data Security 42

3.21.6 Predictive Analytics and Machine Learning 42

3.22 Real-World Applications of Cloud-Based Predictive Maintenance 42

3.23 vibration 44

3.24 fire sensor 49

3.25 BMP2820(PRESSURE SENSOR) 53

Chapter 4: CONTROLLER (59-65)

4.1 Node MCU 59

4.2 Node MCU Specifications 60

4.3 NodeMCU Overview and Features 60

4.3.1 Introduction to NodeMCU 60

4.3.2 Why NodeMCU for Industrial PDM? 61

4.4 Role of NodeMCU in Industrial Predictive Maintenance Systems 61

4.4.1 Integration with Sensors for Data Collection 61

4.4.2 Real-Time Data Collection and Wireless Transmission 62

4.4.3 Cloud Integration and Data Analysis 62

4.5 Applications of NodeMCU in Industrial Predictive Maintenance 63

4.5.1 Manufacturing Industry 63

4.5.2 Oil and Gas Industry 64

4.5.3 Energy and Power Generation 64

4.5.4 Water and Wastewater Treatment 64

4.6 Challenges and Limitations 65

4.6.1 Environmental Factors 65

4.6.2 Power Supply and Connectivity 65

Chapter 5: SOFTWARE INTRODUCTION (66-71)

5.1 Overview of Industrial Predictive Maintenance 66

5.2 The Role of Software in Predictive Maintenance 66

5.2.1 Data Integration and Sensor Integration 66

5.2.2 Data Analytics and Machine Learning 67

5.2.3 Real-Time Monitoring and Alerting 67

5.2.4 Cloud Computing and Remote Monitoring 68

5.2.5 Reporting and Dashboarding 68

5.3 Technologies Behind Predictive Maintenance Software 68

5.3.1 Internet of Things (IoT) 68

5.3.2 Machine Learning and Artificial Intelligence 69

5.3.3 Cloud Computing 69

5.3.4 Edge Computing 70

5.4 Benefits of Predictive Maintenance Software 70

5.4.1 Improved Equipment Reliability 70

5.4.2 Reduced Maintenance Costs 70

5.4.3 Increased Operational Efficiency 71

5.4.4 Extending Equipment Life 71

5.4.5 Enhanced Safety 71

Simulation Results 71

Future Scope 72

Conclusion 73

References 75

ABSTRACT

Industrial predictive maintenance (PDM) is a proactive approach to equipment maintenance that uses advanced data analytics, machine learning, and sensor technologies to predict when machinery or assets are likely to fail. Unlike traditional reactive or preventive maintenance strategies, PdM aims to optimize maintenance schedules by detecting early signs of equipment degradation, enabling timely interventions that prevent unplanned downtime, reduce operational costs, and extend the life of machinery. Through real-time data collection from sensors installed on machines, PdM systems can analyse factors such as vibration, temperature, pressure, and performance metrics to detect anomalies and trends that indicate potential failures. The integration of artificial intelligence (AI) and predictive algorithms allows for continuous learning from historical and real-time data, improving the accuracy of predictions over time. By leveraging predictive analytics, organizations can transition from routine-based maintenance to condition-based maintenance, leading to enhanced reliability, resource optimization, and a significant reduction in maintenance costs. The adoption of industrial predictive maintenance is transforming industries such as manufacturing, energy, and transportation, where equipment reliability is critical to operational success and safety.

LIST OF FIGURES

Fig.3.1 shows the basic block diagram of a fixed regulated power supply 21

Fig 3.2 Circuit Diagram of power supply 26

Fig.3.3 Address locations for a 1x16 line LCD 28

Fig.3.4 pin diagram of 1x16 lines lcd 29

LIST OF TABLES

Table :3.1 pin description 30

Table :3.2 Entering Text 33

LIST OF SYMBOLS

$+$	Addition
$-$	Subtraction
$*$	Multiplication
$/$	Division
$<$	Less than
$>$	Greater than
Σ	Summation
Π	Product
$\int$	Integral
$\sqrt{\ }$	Square root
$\phi(i, j)$	Covariance coefficient of (i, j)
α_j	Prediction coefficients
β	Pitch gain
τ	Lag or Delay
$[\ ]^T$	Transpose of a matrix
ε	Threshold level
B	Number of bits allocated to a quantizer
b	Number of bits
$C[\ ]$	Centre clipping function
C	Codebook

INDUSTRIAL PREDECTIVE MAINTENANCE USING INTERNET OF THINGS

CHAPTER -1

1. INTRODUCTION

In the rapidly evolving world of industrial operations, the ability to predict and prevent equipment failures is crucial to maintaining optimal productivity and minimizing costly downtimes. Industrial Predictive Maintenance (PdM) is emerging as a transformative solution that enables organizations to move beyond traditional maintenance strategies, transitioning from reactive and preventive models to data-driven, proactive management of their assets. As industries become increasingly reliant on advanced technologies, the integration of data analytics, machine learning, and sensor technologies has revolutionized how maintenance is performed, leading to significant improvements in reliability, efficiency, and cost-effectiveness.

1.1 The Shift from Traditional Maintenance Strategies

Maintenance strategies in industrial settings have traditionally fallen into three main categories: reactive, preventive, and predictive. Reactive maintenance, as the name suggests, occurs after a failure has happened. This approach often leads to costly and unplanned downtime, as equipment failure can be sudden and disruptive. Preventive maintenance, on the other hand, involves scheduled maintenance tasks based on manufacturers' recommendations or historical data. While this strategy helps mitigate unexpected failures, it can be wasteful, as it often involves replacing parts or conducting maintenance even when equipment is still in good working condition.

Predictive maintenance is distinct from these approaches because it uses advanced analytics to monitor the health of equipment in real-time, predicting potential failures before they occur. Unlike preventive maintenance, which operates on fixed schedules, predictive maintenance uses the actual condition of the asset as the basis for deciding when and what type of maintenance is needed. This shift from time-based maintenance to condition-based maintenance allows for a more efficient and effective allocation of resources, reducing unnecessary interventions and preventing critical failures that could disrupt operations.

1.2 Technological Advancements Driving PdM

The development and adoption of Industrial Internet of Things (IIoT) technologies have played a key role in the growth of PdM. Sensors installed on industrial machines capture vast amounts of real-time data related to various operational parameters such as temperature, vibration, pressure, and speed. This data is then transmitted to centralized systems for analysis, where it can be processed using advanced algorithms and machine learning techniques.

Machine learning models and predictive algorithms are used to identify patterns and trends that may indicate impending failures or deteriorating conditions. For example, an increase in vibration levels or a rise in temperature beyond normal operational ranges may signal the beginning of a mechanical issue. Predictive models can detect these anomalies early, offering maintenance teams actionable insights into what corrective actions should be taken, thereby preventing catastrophic failures and reducing downtime.

The key to the effectiveness of PdM lies in its ability to learn and adapt over time. As more data is collected, the system improves its predictions, increasing the accuracy and reliability of its forecasts. This continuous learning process ensures that the system becomes more proficient at detecting subtle changes

in equipment behaviour that may not be visible to human operators, thus enhancing the overall precision of the maintenance process.

1.3 The Role of Artificial Intelligence in PDM

Artificial Intelligence (AI) plays a critical role in the predictive maintenance ecosystem. AI technologies, including machine learning, deep learning, and neural networks, allow systems to analyse complex datasets and uncover patterns that may not be immediately apparent. In the context of PdM, AI helps to automate the decision-making process by analyzing vast amounts of historical and real-time data to predict when equipment will likely fail and suggest the most effective maintenance actions.

One of the most significant advantages of AI in predictive maintenance is its ability to refine its predictions over time. As the system is exposed to more data, it learns to identify new trends and anomalies that could indicate potential failures. This evolving nature of AI allows PdM systems to remain highly adaptive and responsive to changing operational conditions.

AI-powered PDM systems also have the potential to predict failures with a high degree of accuracy, reducing the reliance on subjective human judgment. This minimizes the risk of either over-maintaining or under-maintaining equipment, both of which can result in higher costs and reduced operational efficiency. AI's ability to detect early warning signs of failure allows maintenance teams to address issues before they escalate, leading to improved equipment uptime and productivity.

1.4 Benefits of Industrial Predictive Maintenance

The adoption of PDM offers several key advantages over traditional maintenance strategies. One of the primary benefits is the reduction in unplanned downtime. By predicting equipment failures before they occur, PdM systems allow organizations to schedule maintenance during off-peak times, ensuring minimal disruption to operations. This not only helps improve production efficiency but also lowers the costs associated with unscheduled downtime, which can be significant in industries that rely on continuous operations.

Another major benefit of PDM is cost reduction. By performing maintenance only when necessary, businesses can avoid the unnecessary replacement of parts and the cost of routine maintenance tasks that may not be needed. Additionally, PdM enables organizations to optimize the life cycle of their assets, reducing the frequency of replacements and extending the overall lifespan of equipment. This can result in significant cost savings over the long term.

Furthermore, PDM helps optimize resource utilization by allowing maintenance teams to focus their efforts on critical areas that require attention. With a clear understanding of which equipment is at risk of failure, teams can prioritize their maintenance tasks based on urgency and severity, improving operational efficiency and reducing wasted effort.

Lastly, the adoption of PdM fosters a safer working environment. By preventing equipment failures that could lead to safety hazards, organizations can reduce the risk of accidents and ensure a safer workplace for their employees. This is particularly important in industries such as manufacturing, energy, and transportation, where equipment malfunctions can have catastrophic consequences.

1.5 PDM in Various Industries

The benefits of PDM are particularly significant in industries where equipment uptime and reliability are crucial. In manufacturing, for instance, unplanned downtime can disrupt production schedules, leading to delays and increased costs. By implementing PdM, manufacturers can ensure that their equipment operates at peak performance and that maintenance is conducted at the most optimal times. The energy sector also benefits from PdM, where power plants and critical infrastructure rely heavily on maintaining equipment reliability to avoid disruptions in service. Predictive maintenance allows energy providers to detect issues early, preventing costly outages and maintaining the flow of power.

In the transportation sector, PDM is used to monitor the health of vehicles, trains, and airplanes. By predicting when components may fail, maintenance teams can ensure timely repairs, which is essential for keeping transportation networks running smoothly and avoiding costly disruptions.

1.6 Challenges and Future Outlook

While predictive maintenance offers numerous benefits, its implementation is not without challenges. One major hurdle is the need for significant upfront investment in sensor technology, data infrastructure, and the development of predictive algorithms. Additionally, there is a need for skilled personnel who can interpret the data and implement the necessary actions. However, as the technology continues to mature and the cost of sensors and data processing decreases, these barriers are likely to become less significant.

Looking to the future, the role of predictive maintenance will continue to expand as industries adopt more advanced technologies such as 5G, edge computing, and cloud platforms. The ability to collect, process, and analyse data in real time will make PdM even more effective, offering further improvements in efficiency, safety, and cost reduction.

1.7 EXISTING SYSTEM

Industrial predictive maintenance (PDM) systems have gained significant traction in recent years due to their ability to predict equipment failures before they occur, minimizing downtime and reducing maintenance costs. These systems use advanced technologies like sensors, data analytics, machine learning (ML), and artificial intelligence (AI) to monitor the health of industrial machinery and detect signs of potential failure. However, while these systems offer substantial benefits, they are not without their limitations.

Currently, existing PDM systems vary in complexity and functionality, but they typically rely on a combination of the following components: sensor networks, data acquisition systems, real-time monitoring, and predictive analytics. The sensors installed on equipment track various parameters such as vibration, temperature, pressure, and sound, which are then analysed using machine learning algorithms to identify early signs of wear and tear or potential failures. Based on the findings, maintenance teams are notified and can take timely actions to address the issues before they result in costly downtime.

Despite the promising outcomes of predictive maintenance, several disadvantages and challenges remain with current systems. These challenges stem from technological, financial, and operational aspects that hinder their widespread adoption and effective implementation. In this section, we will examine the existing PdM systems and their limitations in depth.

1.8 Technological and Data-Related Disadvantages

1.8.1 Data Quality and Integration Issues

One of the most significant challenges faced by current PdM systems is the issue of data quality and integration. For predictive maintenance to work effectively, high-quality, accurate data is required from a wide range of sensors installed on machinery. However, these sensors are often prone to inaccuracies, malfunction, or inconsistency, which can undermine the reliability of the system's predictions. If the data collected is noisy, incomplete, or erroneous, it can lead to false alarms or missed predictions, potentially causing operational disruption or unnecessary maintenance.

Moreover, the integration of data from multiple sources, such as different machine models, legacy systems, and equipment from various manufacturers, is often cumbersome. In many industrial settings, older machines do not have the necessary sensors or data communication interfaces to connect to modern PdM systems. This lack of interoperability makes it challenging to implement predictive maintenance across an entire factory or plant, especially in environments where both new and old equipment coexist.

1.8.2 High Dependency on Machine Learning Models

Machine learning (ML) models are central to most PdM systems, as they analyse the historical and real-time data from sensors to detect trends, predict failures, and recommend maintenance actions. However, these models are highly dependent on the quantity and quality of data available to train them. Insufficient or unrepresentative data can lead to inaccurate predictions and increase the chances of system failure. Furthermore, the development of accurate ML models requires domain-specific expertise and a deep understanding of the industrial processes being monitored. It can take considerable time to train models, especially in complex industrial environments, and there may be issues with overfitting or underfitting the models, resulting in poor performance.

Another disadvantage is that machine learning models are not inherently transparent, which can lead to issues related to explainability. In some cases, the “black-box” nature of these models makes it difficult for maintenance teams to understand why certain predictions were made. This lack of interpretability can result in a lack of trust in the system’s predictions, leading to hesitant decision-making or overreliance on human intervention.

1.8.3 Scalability Issues

Scalability is another major challenge with existing PdM systems. While small-scale PdM solutions may work effectively on a single machine or a small group of machines, scaling the system to larger industrial environments with many different assets can be difficult. Industrial plants often have complex networks of machines with varying types of equipment, each requiring different maintenance schedules and monitoring techniques. Scaling the PdM system to accommodate such diversity can result in increased complexity and cost.

Additionally, as industries move toward larger, more interconnected systems with thousands of sensors and vast amounts of data, ensuring that the PdM system can handle and process this data efficiently becomes a challenge. Real-time data processing and analysis are crucial, and current PdM systems may struggle to handle large volumes of data at scale, leading to slower decision-making and delayed responses to emerging issues.

1.9 Financial and Operational Disadvantages

1.9.1 High Initial and Ongoing Costs

While predictive maintenance promises long-term savings by reducing downtime and extending equipment life, the initial investment required for PdM systems is often substantial. The cost of installing sensors, upgrading machinery, purchasing advanced analytics software, and integrating all the components into a cohesive system can be prohibitive, especially for smaller organizations or industries with limited budgets.

In addition to the initial setup costs, ongoing costs are also a concern. Maintaining a PdM system requires continual data collection, regular system updates, and ongoing staff training to ensure that the system is operating optimally. For organizations with limited financial resources, these recurring costs can make it difficult to justify the implementation of PdM, especially when the full benefits of the system may take time to materialize.

1.9.2 Complexity of Implementation and Operation

Implementing a predictive maintenance system can be a highly complex and time-consuming process, requiring significant changes to existing maintenance practices and workflows. Businesses must invest considerable time and resources into training staff, calibrating sensors, and developing predictive models specific to their operations. Additionally, integrating PdM with existing enterprise resource planning (ERP) systems, maintenance management systems (MMS), or computerized maintenance management systems (CMMS) can be challenging and often requires bespoke solutions.

Furthermore, PDM systems require continuous monitoring and fine-tuning to ensure that they are functioning properly. Regular updates, recalibration of sensors, and system optimizations are necessary to prevent issues such as model drift, where the accuracy of predictions declines over time due to changes in operational conditions. This ongoing management and oversight require dedicated resources, which may be challenging for organizations to sustain in the long run.

1.9.3 Limited Expertise and Skill Gaps

The effective deployment and operation of a PdM system require highly specialized knowledge and skills, including expertise in data science, machine learning, sensor technology, and industrial operations. The shortage of skilled professionals who can design, implement, and maintain these systems is a significant barrier to their adoption, especially for smaller companies without the resources to hire or train staff in these specialized areas.

Furthermore, even if the necessary expertise is available, the complexity of PdM systems can make it difficult for maintenance teams to fully grasp and trust the predictive results. Human operators may struggle to understand the results of complex data analyses, leading to potential misinterpretations and suboptimal decision-making.

1.10 Performance and Trust Issues

1.10.1 False Positives and Negatives

One of the major concerns with current predictive maintenance systems is the occurrence of false positives and false negatives. False positives occur when the system flags an issue that does not exist, leading to unnecessary maintenance interventions. False negatives, on the other hand, happen when the system fails to detect a fault, potentially leading to catastrophic failures. Both of these outcomes can have significant operational and financial implications.

For example, false positives can result in unnecessary downtime, labour costs, and parts replacements, while false negatives may lead to unexpected breakdowns that could have been avoided with more accurate predictions. The system's reliance on historical data to predict future failures may not always account for new or unforeseen issues, making it vulnerable to both types of errors.

1.10.2 Lack of Standardization

Another issue with current PDM systems is the lack of standardization in terms of sensor types, data formats, and analytics methodologies. In industries where multiple manufacturers provide equipment, there is often no consistent approach to data collection or monitoring, leading to fragmentation. This lack of standardization complicates the integration of different equipment into a unified PdM system, making it difficult for organizations to achieve a holistic view of their operations.

1.11 Conclusion

Despite the significant advantages of predictive maintenance systems, such as minimizing downtime, reducing maintenance costs, and improving the lifespan of machinery, there are several disadvantages that need to be addressed. These include issues related to data quality and integration, high costs, implementation complexity, and the dependence on machine learning models. Additionally, operational challenges such as false positives, skill gaps, and the lack of standardization make it difficult for industries to adopt and optimize PdM systems fully.

As technology continues to advance, many of these challenges will likely be addressed through innovations in sensor technology, improved machine learning algorithms, and better integration platforms. However, until these obstacles are overcome, organizations must carefully consider the costs, benefits, and risks associated with predictive maintenance before committing to its implementation.

1.12 PROPOSED SYSTEM

Industrial predictive maintenance (PDM) is an evolving field that harnesses the power of technology to monitor equipment health, predict potential failures, and optimize maintenance schedules, ultimately improving operational efficiency. However, the existing PdM systems have several limitations, including issues related to sensor integration, data quality, cost, and scalability. To overcome these challenges, a proposed system for predictive maintenance introduces new methodologies, tools, and frameworks designed to address these limitations and enhance the overall performance of industrial operations.

The proposed system utilizes a combination of advanced technologies, including Internet of Things (IoT) sensors, edge computing, cloud-based analytics, and artificial intelligence (AI) models, to create a more seamless and efficient predictive maintenance process. By integrating these technologies into an

intelligent, automated maintenance framework, the system aims to offer real-time, actionable insights that can predict failures and optimize maintenance tasks.

1.13 Proposed System Overview

1.13.1 IoT Sensors and Real-time Data Collection

The foundation of the proposed PdM system lies in IoT-enabled sensors that continuously collect real-time data from machines and assets in the production line. These sensors are capable of monitoring a wide range of parameters, including temperature, vibration, pressure, humidity, acoustic emissions, and motor current. By employing wireless communication networks (such as 5G or Wi-Fi), the data is transmitted to an edge computing layer that processes and analyses the data locally before sending it to a cloud-based system for deeper analysis.

The primary benefit of IoT sensors in the proposed system is their ability to provide continuous and granular data, which significantly improves the detection of early signs of equipment deterioration. This real-time monitoring ensures that operators receive the most up-to-date information on the status of equipment, enabling faster responses and proactive maintenance actions.

1.13.2 Edge Computing for Real-Time Analytics

Edge computing is a critical component of the proposed system, as it allows data processing to occur closer to the source of the data, i.e., at the machine level, before transmitting it to the cloud. This decentralized approach reduces latency, enabling real-time monitoring and faster response times to potential failures. Edge computing also helps minimize bandwidth usage, as only relevant, processed data is sent to the cloud, reducing the amount of data transmitted and ensuring that only essential insights are communicated.

In the proposed system, edge devices will employ lightweight machine learning models that can process data locally and trigger immediate alerts if abnormal readings are detected. This minimizes the need for centralized processing, ensuring that time-sensitive issues are addressed quickly without waiting for cloud-based analysis.

1.13.3 Cloud-based Analytics and AI Models

While edge computing handles real-time processing, cloud-based systems provide powerful analytical tools for deeper insights and long-term trend analysis. In the cloud, large datasets collected from various machines over time are aggregated, stored, and analysed using advanced AI and machine learning algorithms. These models are trained to recognize patterns in equipment behaviour and predict future failures based on historical data and sensor readings.

The cloud-based system continuously learns from incoming data, improving its predictive capabilities over time. By employing AI-driven predictive models, the system can forecast potential failures and suggest maintenance actions in advance, such as replacing parts, lubricating machinery, or scheduling downtime. Predictive analytics help reduce downtime by ensuring that maintenance activities are planned only when necessary and at the most optimal time.

1.13.4 Integration with Enterprise Systems

A key feature of the proposed PdM system is its ability to integrate seamlessly with existing enterprise resource planning (ERP) systems, computerized maintenance management systems (CMMS), and enterprise asset management (EAM) tools. This integration ensures that maintenance activities are aligned with business operations and resource allocation, making it easier to track maintenance schedules, spare parts inventory, and costs.

By linking predictive maintenance systems to an organization's broader operational frameworks, maintenance teams can receive proactive alerts about equipment health status, schedule maintenance, and allocate resources in real-time. This integration improves decision-making, streamlines workflows, and ensures that maintenance actions are executed as efficiently as possible.

1.13.5 User-friendly Dashboards and Reporting Tools

The proposed PDM system will feature intuitive, user-friendly dashboards that present maintenance teams with clear visualizations of equipment health, sensor data, and predicted failure timelines. These dashboards will provide easy-to-understand reports that show trends, anomalies, and recommended actions, allowing maintenance teams to quickly assess equipment status and prioritize tasks.

The use of data visualizations, graphs, and charts in these dashboards ensures that even non-technical users can understand the system's findings, making it easier for operators, managers, and maintenance personnel to act on the insights provided. Advantages of the Proposed Predictive Maintenance System

The proposed predictive maintenance system offers a wide array of advantages that address the shortcomings of existing PdM solutions. These benefits span operational efficiency, cost savings, and improvements in equipment reliability, making it a game-changer for industrial organizations.

1.14 Reduced Unplanned Downtime

One of the most significant advantages of the proposed PdM system is its ability to predict and prevent unplanned downtime. By continuously monitoring equipment health and detecting potential issues before they cause failure, the system allows maintenance teams to schedule repairs during non-peak hours, preventing disruptions in production. Early detection of anomalies means that organizations can take corrective action before failures lead to catastrophic breakdowns, which is particularly valuable in critical industries like manufacturing, energy, and transportation.

Predictive maintenance enables organizations to maintain a higher level of uptime, which is critical for industries with high production demand or mission-critical systems. By reducing downtime, companies can enhance productivity, meet delivery deadlines, and improve overall business performance.

1.15 Cost Savings

The proposed PDM system can result in significant cost savings over time. Traditional preventive maintenance involves regularly scheduled checks and repairs, even when equipment is functioning optimally. This results in unnecessary maintenance tasks and the premature replacement of parts, leading to increased labour costs and material waste. On the other hand, the predictive maintenance system optimizes maintenance schedules based on actual equipment health, ensuring that maintenance is performed only when necessary.

By minimizing unnecessary interventions and extending the lifespan of machinery, organizations can reduce maintenance costs. Furthermore, predictive maintenance avoids the more expensive costs associated with unplanned breakdowns, including emergency repairs, production delays, and lost revenues.

1.16 Improved Asset Longevity

One of the key advantages of predictive maintenance is that it helps extend the lifespan of industrial assets. With timely and targeted maintenance actions, machinery can operate at peak efficiency for a longer period, reducing wear and tear. This is achieved by addressing issues such as overheating, excessive vibration, or lubricant degradation before they cause significant damage to the equipment.

Additionally, the insights generated by the system allow maintenance teams to better understand the factors contributing to wear and tear on assets, enabling them to optimize operational conditions and improve machine performance. This leads to better asset utilization, greater return on investment (ROI), and fewer unexpected capital expenditures on replacements or repairs.

1.17 Enhanced Safety and Risk Management

The predictive maintenance system significantly improves safety by detecting potential failures that could result in accidents or hazardous situations. For instance, in industries such as energy and manufacturing, equipment malfunctions can lead to dangerous working conditions, including explosions, fires, or electrical failures. By preventing these events through predictive alerts, organizations can maintain a safer working environment, reducing the risk of injury or loss of life.

Furthermore, PDM helps organizations comply with safety regulations by ensuring that equipment is properly maintained and functioning at optimal levels, which reduces the likelihood of accidents caused by faulty machinery. This contributes to a safer, more stable operation and enhances the company's reputation in terms of safety and compliance.

1.18 Optimized Resource Utilization

By integrating predictive maintenance with ERP, CMMS, and EAM systems, the proposed solution optimizes resource allocation. Maintenance activities are scheduled more effectively, ensuring that personnel, tools, and spare parts are available when needed, without overburdening the workforce or depleting resources. This level of optimization leads to better planning, reduced inventory costs, and improved resource management.

Additionally, by leveraging data-driven insights, maintenance teams can make more informed decisions regarding the replacement of parts or equipment upgrades, reducing waste and ensuring that resources are allocated in the most cost-effective manner possible.

1.19 Scalable and Flexible

Unlike traditional PDM systems that struggle with scalability, the proposed system is designed to be flexible and easily scalable. The use of IoT sensors, cloud-based analytics, and edge computing ensures that the system can be deployed across a variety of industrial settings, regardless of the size of the operation or the age of the equipment. Whether the organization operates a small facility with a few machines or a large, complex network of interconnected systems, the proposed system can scale to meet the needs of the business.

The cloud-based infrastructure also allows for easy updates and modifications to the system, ensuring that the PdM solution evolves as the business grows and technology advances.

CHAPTER -2

LITERATURE SURVAY

2. Introduction

Predictive maintenance (PDM) has emerged as a critical strategy for improving operational efficiency, reducing downtime, and increasing the lifespan of industrial equipment. By leveraging modern technologies such as the Internet of Things (IoT), machine learning (ML), artificial intelligence (AI), and data analytics, PdM systems can forecast when a piece of equipment is likely to fail and trigger maintenance interventions before breakdowns occur. The concept of predictive maintenance has been evolving, with numerous studies exploring different techniques, technologies, and applications across various industries.

This literature survey aims to provide a comprehensive review of the current research and practices in industrial predictive maintenance. We will cover the foundational concepts, key technologies used, major advancements, real-world applications, and the challenges that remain in the field.

2.1 Fundamentals of Predictive Maintenance

2.1.1 Definition and Concept

Predictive maintenance refers to the use of advanced data analytics, sensors, and algorithms to predict when industrial equipment will fail or require maintenance. Unlike traditional maintenance methods, such as preventive or reactive maintenance, PdM aims to reduce unnecessary downtime by performing maintenance tasks based on real-time data collected from machinery.

2.1.2 Historical Development

The concept of predictive maintenance has evolved from earlier maintenance strategies like corrective and preventive maintenance (PM). Initially, maintenance practices were reactive, where machinery was fixed only after a failure occurred. Later, preventive maintenance emerged, aiming to perform routine checks on equipment based on predefined schedules. However, the limitations of both approaches became apparent—reactive maintenance led to excessive downtime, and preventive maintenance incurred unnecessary costs even when equipment was functioning well.

The introduction of sensor technologies, combined with data analytics and machine learning algorithms, led to the development of predictive maintenance, which moves away from arbitrary schedules and responds dynamically to equipment health and performance data. According to **Mobley (2002)**, predictive maintenance uses real-time data and statistical models to detect early signs of failures, thus enabling timely interventions.

2.2 Key Technologies in Predictive Maintenance

2.2.1 Internet of Things (IoT)

IoT plays a central role in predictive maintenance by enabling continuous data collection from various machines and sensors embedded in industrial equipment. IoT sensors measure parameters such as vibration, temperature, pressure, and humidity, providing a comprehensive overview of the equipment’s condition.

These sensors communicate the collected data to centralized systems where it is processed and analysed to predict potential failures.

2.2.2 Machine Learning (ML) and Artificial Intelligence (AI)

Machine learning and AI are integral to predictive maintenance systems. By applying machine learning algorithms to large datasets collected from IoT sensors, PdM systems can identify patterns that indicate impending failures. **Sharma et al. (2020)** propose that the combination of supervised and unsupervised learning techniques can help identify early-warning signs of failure, such as abnormal vibration patterns or temperature fluctuations. AI models continuously improve their predictive accuracy as they process more historical data.

2.2.3 Data Analytics and Statistical Techniques

Data analytics techniques, such as regression analysis, time-series analysis, and anomaly detection, are used to process and analyse sensor data. **Garrido et al. (2018)** discuss various statistical techniques employed in PdM, emphasizing how trend analysis and statistical forecasting methods are applied to detect patterns that precede equipment failures. These analytics help maintenance teams determine the remaining useful life (RUL) of machinery and optimize repair schedules.

2.2.4 Cloud Computing and Edge Computing

Cloud computing provides the infrastructure needed to store and process large volumes of data generated by IoT sensors. **Khan et al. (2020)** explore how cloud-based solutions allow companies to scale predictive maintenance solutions across multiple locations, providing centralized monitoring and management of equipment health.

Edge computing, on the other hand, processes data closer to the source of data collection, which significantly reduces latency. **Li et al. (2019)** highlight that edge computing in PdM systems enables real-time decision-making, as it allows data processing to occur at the point of collection, reducing the need to send large datasets to a central server and ensuring faster reaction times.

2.3 Machine Learning Techniques for Predictive Maintenance

2.3.1 Supervised Learning

Supervised learning algorithms are widely used in predictive maintenance because they require labelled data to train the models. These algorithms learn from historical data, where failures are already known, to predict future failures in similar systems. **Zhao et al. (2018)** discuss the application of support vector machines (SVM), decision trees, and random forests in PdM, where these models can classify equipment conditions and predict failures based on historical data and sensor readings.

2.3.2 Unsupervised Learning

Unsupervised learning techniques do not require labelled data and are particularly useful for anomaly detection. These models learn to identify normal patterns of operation and flag deviations as potential failures. **Dong et al. (2019)** provide examples of clustering algorithms such as K-means and DBSCAN, which are used in PdM to group equipment behaviour into categories, helping to identify anomalies that could indicate emerging faults.

2.3.3 Deep Learning

Deep learning, a subfield of machine learning, is becoming increasingly important in predictive maintenance due to its ability to process complex and high-dimensional data. **Zhao et al. (2019)** demonstrate how convolutional neural networks (CNN) and recurrent neural networks (RNN) are applied to predict machinery failures by analysing time-series data, sensor signals, and vibration patterns. Deep learning models are effective at automatically extracting features from raw data, which significantly improves predictive accuracy.

2.4. Real-World Applications of Predictive Maintenance

2.4.1 Manufacturing Industry

In manufacturing, predictive maintenance is widely adopted for machinery such as motors, pumps, conveyors, and CNC machines. **Sahu et al. (2017)** discuss how predictive maintenance is implemented to monitor the health of equipment in production lines, where even a small downtime can lead to significant losses. By predicting failures and scheduling maintenance interventions in advance, manufacturers can optimize their operations and improve overall equipment efficiency.

2.4.2 Energy and Utilities Sector

The energy and utilities sector, particularly in power plants and renewable energy installations like wind turbines and solar panels, has also benefited from predictive maintenance. **Shukla et al. (2020)** explore how PdM techniques are used in power generation plants to monitor the health of turbines, generators, and transformers, enabling timely maintenance and reducing the risk of catastrophic failures. PdM is also employed in the maintenance of pipeline infrastructure and electricity grids to identify issues such as leaks or power surges before they escalate.

2.4.3 Transportation and Logistics

In the transportation and logistics industry, predictive maintenance is used to monitor the health of vehicles, including trucks, trains, airplanes, and ships. **Wu et al. (2018)** highlight the use of predictive maintenance for fleet management, where sensors track the condition of key components like engines, brakes, and tires. PdM helps ensure that maintenance is performed proactively to avoid costly breakdowns and improve fleet utilization rates.

2.4.4 Aerospace

The aerospace industry is another sector where predictive maintenance plays a critical role. **Chakraborty et al. (2020)** discuss how airlines use PdM to monitor the health of aircraft engines, avionics systems, and other critical components. By utilizing predictive models, airlines can reduce delays and cancellations caused by unexpected equipment failures and optimize maintenance schedules to ensure aircraft availability.

2.5 Challenges and Limitations of Predictive Maintenance

Despite the significant potential of predictive maintenance, several challenges hinder its widespread adoption.

2.5.1 Data Quality and Reliability

The accuracy of predictive maintenance models relies heavily on the quality of the data collected from sensors. **Mohan et al. (2019)** argue that noisy, incomplete, or inaccurate sensor data can lead to false positives or missed predictions, which undermines the effectiveness of PdM systems. Additionally, issues related to sensor calibration and drift can negatively affect data reliability.

2.5.2 High Initial Investment

The initial cost of implementing a PdM system can be prohibitive, especially for small and medium-sized enterprises (SMEs). **Hossain et al. (2020)** emphasize that the cost of purchasing IoT sensors, upgrading legacy systems, and integrating predictive maintenance technologies with existing enterprise resource planning (ERP) and asset management systems can be a significant barrier to entry for many organizations.

2.5.3 Integration Challenges

Integrating predictive maintenance solutions with existing enterprise systems, such as maintenance management systems (MMS) and ERP systems, is often complex and time-consuming. **Kang et al. (2018)** discuss how data interoperability between various systems and legacy equipment remains a challenge in PdM implementation. Organizations must ensure that predictive maintenance solutions can communicate with their existing workflows and infrastructure to achieve optimal performance.

2.5.4 Skills and Expertise

The implementation of a predictive maintenance system requires expertise in data science, machine learning, and industrial operations. **Yu et al. (2019)** highlight the shortage of skilled professionals capable of developing, deploying, and maintaining predictive maintenance solutions. The lack of qualified personnel can delay implementation and limit the success of PdM projects.

2.5.5 Ethical and Privacy Concerns

As predictive maintenance relies heavily on data collection from equipment and sensors, ethical and privacy concerns may arise. **Zhou et al. (2020)** point out that collecting data on industrial operations, employee activities, or machinery could potentially raise privacy concerns, particularly in industries with sensitive data or regulatory requirements.

2.6 INPUT DEVICE:

2.6.1 Sensors

Sensors are the backbone of data collection in predictive maintenance systems. These devices continuously monitor and capture different parameters such as vibration, temperature, pressure, humidity, and more, which are essential for identifying signs of potential failures.

2.7 Types of Sensors Used in Predictive Maintenance

2.7.1 Vibration Sensors (Accelerometers)

- **Purpose**: Vibration sensors, also known as accelerometers, are used to detect vibrations in machinery and components like motors, pumps, and bearings.

- **Importance**: Abnormal vibration patterns are often an early indicator of mechanical faults such as imbalance, misalignment, or bearing wear.
- **Use Case**: In rotating machinery like motors, high levels of vibration can signal a problem that could lead to a failure. PdM systems use vibration data to analyse the frequency and amplitude of vibrations, which helps predict potential failures.

2.7.2 Temperature Sensors

- **Purpose**: Temperature sensors monitor the operating temperature of machinery, electrical systems, and critical components.
- **Importance**: Overheating is one of the most common causes of equipment failure. By monitoring temperature trends over time, PdM systems can detect overheating and prevent overheating-related damage.
- **Use Case**: In systems like motors or compressors, a sudden rise in temperature can indicate a failure in bearings, electrical components, or cooling systems. Predictive algorithms analyse these trends to signal when maintenance is necessary.

2.7.3 Pressure Sensors

- **Purpose**: Pressure sensors measure the pressure of fluids or gases in pipelines, tanks, or machinery.
- **Importance**: Abnormal pressure readings can indicate leakage, blockages, or failures in pumps, valves, or compressors.
- **Use Case**: In the case of a hydraulic system, if the pressure sensor detects a drop in pressure, it can indicate a potential issue such as a leak, which could result in a system failure if not addressed.

2.7.4 Humidity Sensors

- **Purpose**: These sensors monitor the humidity levels in industrial environments, particularly in areas where moisture could negatively affect equipment.
- **Importance**: Excessive moisture can cause corrosion, rust, and electrical malfunctions in sensitive machinery.
- **Use Case**: In environments where humidity is critical, such as storage or processing areas, these sensors help prevent moisture-related issues by triggering maintenance actions if humidity levels exceed safe limits.

2.7.5 Acoustic Sensors (Ultrasonic Sensors)

- **Purpose**: Acoustic or ultrasonic sensors detect high-frequency sound waves that can indicate specific problems in machinery such as leaks, cavitation, or lubrication failure.
- **Importance**: The presence of unusual sounds or ultrasonic emissions can be a sign of internal faults within equipment like pumps, compressors, and turbines.

- **Use Case**: Ultrasonic sensors can be used to detect air or gas leaks in pipelines, or unusual sounds from motors, which may not be audible to the human ear but can significantly impact machinery performance.

2.8 IoT Devices (Internet of Things)

The Internet of Things (IoT) connects industrial machinery and sensors to a network, allowing for the seamless transmission of data to centralized systems for analysis. IoT devices are essential for enabling real-time monitoring, and their integration with predictive maintenance systems enhances the overall effectiveness of PdM strategies.

2.9 Key IoT Devices in Predictive Maintenance

2.9.1 Edge Devices

- **Purpose**: Edge devices are small computing units placed at the machine level to process sensor data locally before sending it to cloud servers or centralized systems.
- **Importance**: These devices reduce data transmission latency and help in immediate decision-making. They also assist in reducing bandwidth usage by filtering unnecessary data.
- **Use Case**: In industrial settings, edge devices process vibration, temperature, or pressure data and determine if any threshold limits are breached. If needed, they send critical data to the central system for further analysis or alerting.

2.9.2 Gateway Devices

- **Purpose**: Gateway devices connect IoT sensors to cloud platforms or local servers.
- **Importance**: These devices aggregate sensor data from multiple devices and forward it to central systems or cloud platforms for deeper analysis and decision-making.
- **Use Case**: In an industrial factory, a gateway device may aggregate data from temperature sensors on several machines, ensuring that all information is collected and sent for processing.

2.10 Data Acquisition Systems (DAQ)

A Data Acquisition System (DAQ) is used to collect data from various sensors and other input devices. It serves as an intermediary between sensors and the PdM software, converting analog sensor signals into digital data that can be analysed.

2.10.1 Key Features of DAQ Systems

- **Signal Conditioning**: The DAQ system can condition sensor signals (such as filtering, amplifying, or converting) to ensure the data is suitable for analysis.
- **Multi-Sensor Support**: Modern DAQ systems can interface with multiple sensors simultaneously, collecting data from various types of measurements (vibration, temperature, pressure, etc.) at once.
- **Data Logging**: DAQ systems can log data over time, creating historical records of machine conditions for further analysis in predictive models.

Use Case: In a large-scale factory setting, a DAQ system may collect data from multiple vibration and temperature sensors installed across different machines. The system then sends this data to the central PdM system for analysis and prediction.

2.11 Machine Vision Systems

Machine vision systems use cameras and optical sensors to visually inspect machinery and equipment for signs of wear or failure. These systems are particularly useful in detecting surface-level issues such as cracks, leaks, or abnormal wear patterns.

2.12 Key Features of Machine Vision in Predictive Maintenance

- **Image Processing**: High-resolution cameras capture images of machine parts, and image processing software analyzes these images to detect physical damage or wear.
- **Pattern Recognition**: Advanced machine vision software can recognize patterns of damage that are indicative of specific failure modes, such as cracks or misalignments.
- **Integration with PdM**: Machine vision systems can be integrated with PdM platforms to trigger alerts when a potential issue is detected, ensuring timely intervention.

Use Case: In a manufacturing environment, a machine vision system may inspect the surface of metal components for cracks or signs of corrosion. If the system detects an anomaly, it can alert maintenance teams to inspect the affected area before it leads to a breakdown.

2.13 Advanced Input Devices: Thermal Imaging Cameras

Thermal imaging cameras are used to detect temperature variations across machinery or systems. These cameras can identify hot spots and abnormal heat patterns, which may indicate issues like electrical faults, bearing wear, or motor failure.

How Thermal Imaging Works in PdM

- **Heat Mapping**: Thermal cameras create heat maps of equipment, displaying temperature variations that may not be visible to the naked eye.
- **Failure Prediction**: Excessive heat often signals friction or electrical malfunction. Early detection of heat anomalies allows for predictive maintenance actions before serious damage occurs.

Use Case: In a power generation facility, thermal imaging cameras are used to monitor transformers, electrical panels, and other critical equipment. High temperatures in a particular area can indicate a potential electrical fault or overheating, prompting maintenance to intervene before a failure.

2.14 OUTPUT DEVICE:

2.14.1 Alarms and Alert Systems

Alarms and alert systems are a primary means of notifying maintenance teams and operators about potential equipment failures, system malfunctions, or safety hazards. These output devices can provide visual, auditory, or both types of alerts when predictive maintenance systems detect anomalies or predict failure.

2.14.2 Audible Alarms

- **Purpose**: Audible alarms are used to alert maintenance personnel about urgent issues that require immediate attention.
- **Importance**: These alarms can be triggered based on predefined thresholds of sensor data, such as abnormal temperature, pressure, or vibration levels, signaling an impending failure.
- **Use Case**: If a motor's temperature exceeds a critical threshold, an audible alarm could sound in the control room, notifying operators to investigate and perform corrective maintenance.

2.14.3 Visual Indicators (LED Displays)

- **Purpose**: Visual indicators like LED panels or screens are used to display real-time information about equipment status and health.
- **Importance**: Visual indicators, often installed in areas where personnel are frequently present, provide a quick overview of the equipment's operational status.
- **Use Case**: If a specific machine is nearing failure, the LED display may flash red, signalling the need for immediate attention. Different colours or patterns (e.g., yellow for warning, red for critical issues) can convey varying levels of urgency.

2.14.4 Digital and Analog Displays

- **Purpose**: Digital or analog displays show key performance indicators (KPIs) and sensor data in real time, providing continuous updates on the condition of machinery.
- **Importance**: They help operators assess equipment health at a glance and can support decision-making for maintenance scheduling.
- **Use Case**: For a pump, the display may show parameters like pressure, flow rate, or temperature, allowing the operator to see if the equipment is operating outside of normal conditions.

2.15 Control System Integration

Control systems are often part of the output devices in predictive maintenance systems, especially in automated or semi-automated industrial environments. These systems can take corrective actions based on the analysis of data provided by sensors.

2.15.1 Supervisory Control and Data Acquisition (SCADA) Systems

- **Purpose**: SCADA systems are central control units that manage and monitor large-scale industrial processes. They integrate data from multiple sensors and make real-time decisions based on predictive maintenance algorithms.
- **Importance**: SCADA systems provide operators with an interface for controlling machines and equipment. They can also trigger automated actions, such as adjusting machine settings or stopping operations when a failure is predicted.
- **Use Case**: If a vibration sensor on a motor indicates a potential fault, the SCADA system can automatically adjust the motor's speed to reduce stress or even shut it down to avoid further damage.

2.15.2 Programmable Logic Controllers (PLCs)

- **Purpose**: PLCs are used to automate and control industrial processes. They can receive inputs from predictive maintenance systems and take actions based on those inputs.
- **Importance**: PLCs enable automated responses to maintenance alerts and predictions, which can include shutting down equipment, rerouting power, or switching to backup systems in case of detected failure.
- **Use Case**: In an automated conveyor system, a PLC might receive an alert from the vibration sensor indicating an imbalance. The PLC could then automatically reduce the speed of the conveyor to prevent further damage or stop the system for repairs.

2.16 Mobile Devices and Tablets

Mobile devices, including smartphones and tablets, are essential output devices for communicating predictive maintenance information to maintenance staff. These devices facilitate remote access to system data, allowing technicians to receive alerts and perform diagnostics on-site or from a distance.

2.16.1 Mobile Notifications

- **Purpose**: Mobile notifications send alerts directly to the devices used by maintenance personnel, such as smartphones or tablets, whenever an issue is detected.
- **Importance**: Mobile notifications enable immediate responses to equipment issues, even when technicians are not physically present at the site.
- **Use Case**: When a temperature sensor detects overheating in a motor, a mobile notification can be sent to the technician on the floor to take immediate action, potentially even providing diagnostic data about the issue.

2.16.2 Mobile Dashboards and Reporting

- **Purpose**: Mobile dashboards allow maintenance teams to monitor equipment performance, track maintenance schedules, and review predictive maintenance analytics on their mobile devices.
- **Importance**: They offer real-time visibility into equipment health and performance, allowing field technicians to respond quickly and efficiently to maintenance needs.
- **Use Case**: A maintenance supervisor could access the mobile dashboard to check the health of critical equipment in different parts of the plant, enabling them to prioritize tasks and allocate resources effectively.

2.17 Human-Machine Interface (HMI)

The HMI is an interface that allows operators to interact with machines, providing them with crucial output data about equipment status, predictive maintenance forecasts, and performance analytics.

2.17.1 Touchscreen Monitors

- **Purpose**: Touchscreen monitors serve as interactive displays where operators can view detailed real-time data, perform diagnostics, and interact with the predictive maintenance system.
- **Importance**: These monitors display sensor data, analysis results, and alerts, enabling operators to take immediate action based on the predictions provided by the system.
- **Use Case**: A touchscreen interface in a control room might display the temperature, vibration, and pressure readings for multiple machines, with predictive maintenance alerts for any machine showing signs of failure.

2.17.2 Customizable Dashboards

- **Purpose**: Dashboards present data in a visually intuitive manner, with graphical representations of machine health, trends, and alerts.
- **Importance**: They allow operators and maintenance teams to understand complex data at a glance and make data-driven decisions quickly.
- **Use Case**: A dashboard may display real-time graphs of vibration levels for a motor, with the predicted failure date based on analysis, along with a recommended maintenance window.

2.18 Reports and Documentation

Output devices also generate reports that provide detailed information on the status of the equipment, predictions for failure, and recommendations for maintenance. These reports can be used for decision-making, record-keeping, and continuous improvement.

2.18.1 Automated Reports

- **Purpose**: Automated reports provide maintenance teams with detailed insights into the current state of the equipment, any faults detected, and predictions for future maintenance needs.
- **Importance**: These reports help plan future maintenance, prioritize work orders, and ensure that maintenance tasks are performed on time.
- **Use Case**: After each predictive maintenance analysis, the system may generate a report detailing sensor readings, predictive models, and a recommended course of action for each piece of equipment.

2.18.2 Maintenance Logs

- **Purpose**: Maintenance logs track the history of all maintenance activities carried out on equipment, including corrective, preventive, and predictive tasks.
- **Importance**: These logs provide a historical record of maintenance activities and can be valuable for evaluating the effectiveness of PdM strategies over time.
- **Use Case**: A maintenance log may record when a motor was inspected based on predictive analysis, what repairs were done, and when the next predicted maintenance event will occur, helping optimize future schedules.

CHAPTER -3

3. BLOCK DIAGRAM AND EXPLANATION

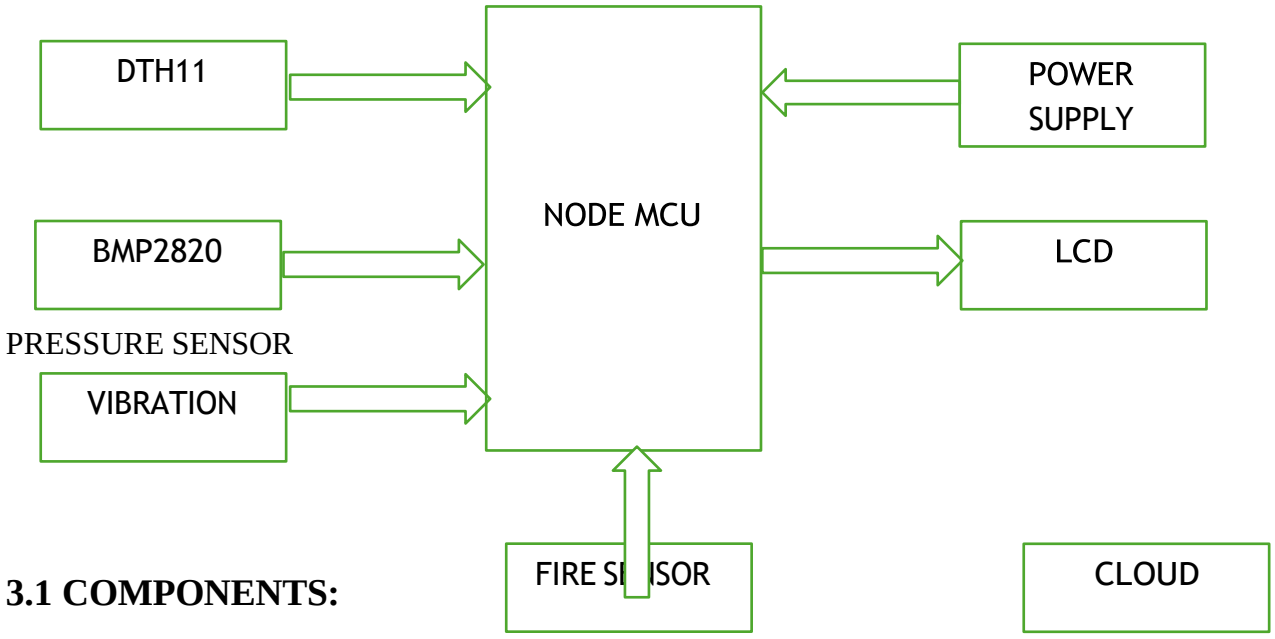

3.1 COMPONENTS:

3.1.1 POWER SUPPLY

All digital circuits require regulated power supply. In this article we are going to learn how to get a regulated positive supply from the mains supply.

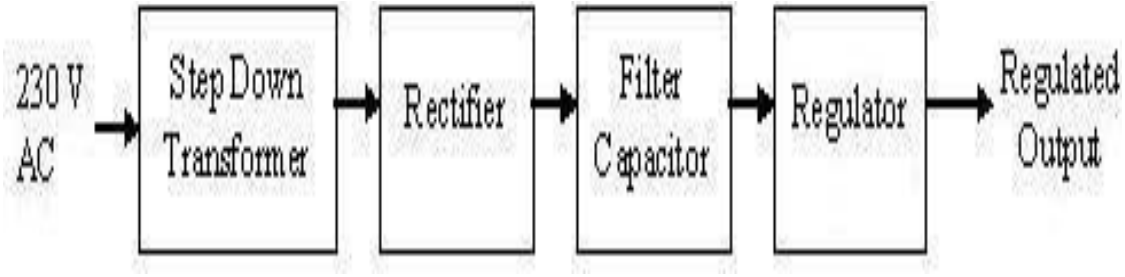

Figure.3.1 shows the basic block diagram of a fixed regulated power supply.

Let us go through each block.

3.1.2 TRANSFORMER

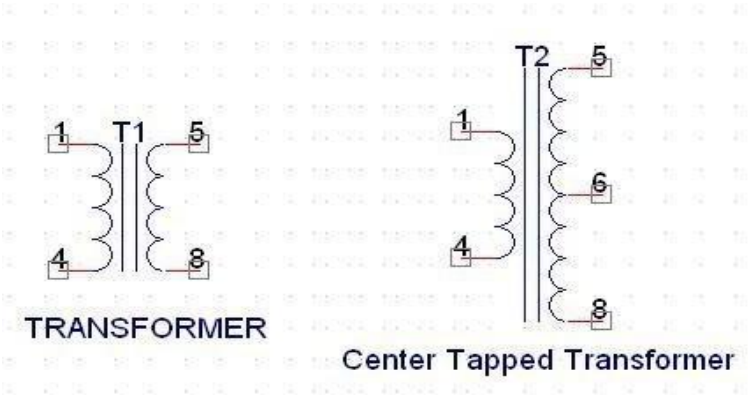

A transformer consists of two coils also called as "*WINDINGS*" namely *PRIMARY & SECONDARY.* They are linked together through inductively coupled electrical conductors also called as CORE. A changing current in the primary causes a change in the Magnetic Field in the core & this in turn induces an alternating voltage in the secondary coil. If load is applied to the secondary then an alternating current will flow through the load. If we consider an ideal condition then all the energy from the primary circuit will be transferred to the secondary circuit through the magnetic field.

$$P_{primary} = P_{secondary}$$

So

$$I_p V_p = I_s V_s$$

The secondary voltage of the transformer depends on the number of turns in the Primary as well as in the secondary.

$$\frac{V_s}{V_p} = \frac{N_s}{N_p}$$

3.2 Rectifier

A rectifier is a device that converts an AC signal into DC signal. For rectification purpose we use a diode, a diode is a device that allows current to pass only in one direction i.e. when the anode of the diode is positive with respect to the cathode also called as forward biased condition & blocks current in the reversed biased condition.

Rectifier can be classified as follows:

3.2.1 Half Wave rectifier.

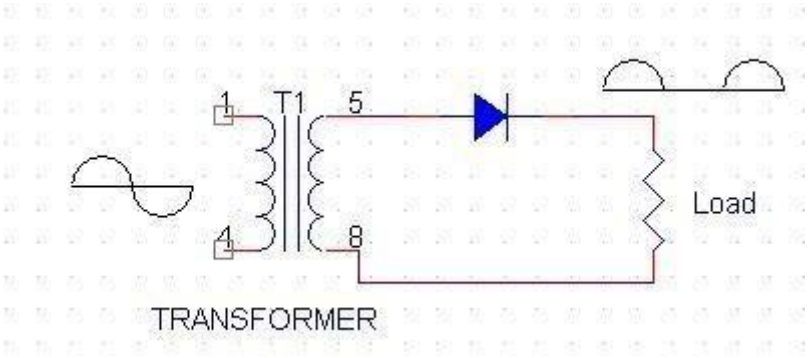

This is the simplest type of rectifier as you can see in the diagram a half wave rectifier consists of only one diode. When an AC signal is applied to it during the positive half cycle the diode is forward biased & current flows through it. But during the negative half cycle diode is reverse biased & no current flows through it. Since only one half of the input reaches the output, it is very inefficient to be used in power supplies.

3.2.2 Full wave rectifier.

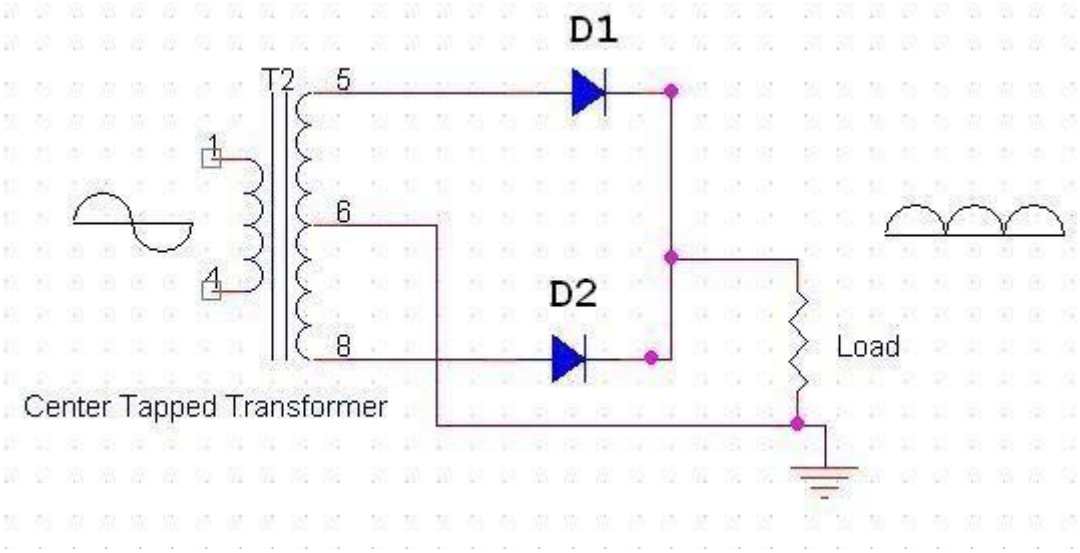

Half wave rectifier is quite simple but it is very inefficient, for greater efficiency we would like to use both the half cycles of the AC signal. This can be achieved by using a centre tapped transformer i.e. we would have to double the size of secondary winding & provide connection to the centre. So, during the positive half cycle diode D1 conducts & D2 is in reverse biased condition. During the negative half cycle diode D2 conducts & D1 is reverse biased. Thus, we get both the half cycles across the load. One of the disadvantages of Full Wave Rectifier design is the necessity of using a centre tapped transformer, thus increasing the size & cost of the circuit. This can be avoided by using the Full Wave Bridge Rectifier.

3.2.3 Bridge Rectifier

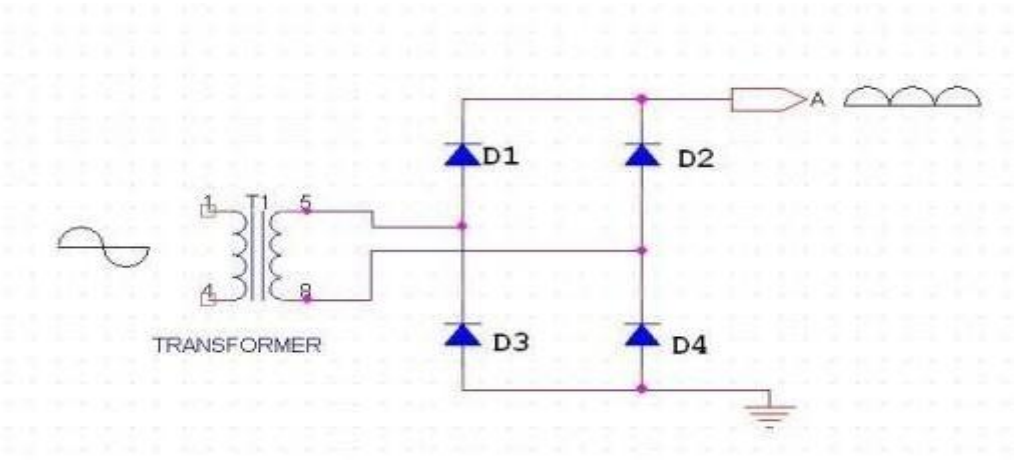

As the name suggests it converts the full wave i.e. both the positive & the negative half cycle into DC thus it is much more efficient than Half Wave Rectifier & that too without using a centre tapped transformer thus much more cost effective than Full Wave Rectifier. Full Bridge Wave Rectifier consists of four diodes namely D1, D2, D3 and D4. During the positive half cycle diodes D1 & D4 conduct whereas in the negative half cycle diodes D2 & D3 conduct thus the diodes keep switching the transformer connections so we get positive half cycles in the output.

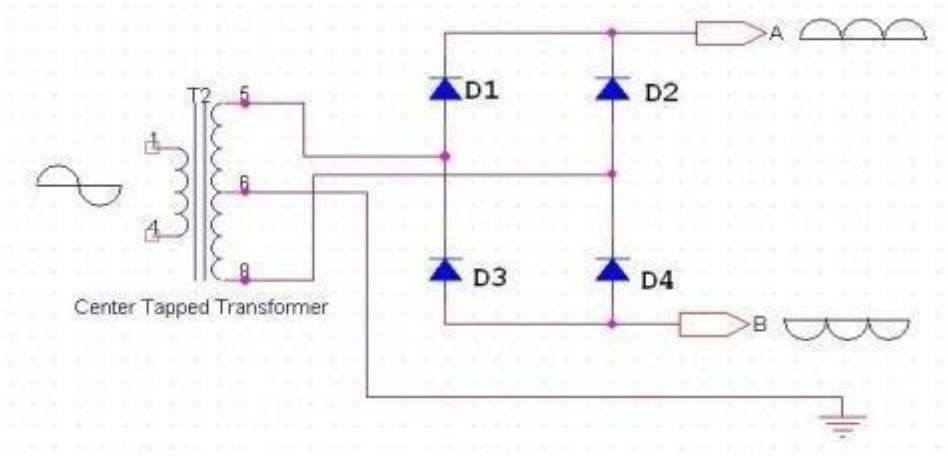

If we use a centre tapped transformer for a bridge rectifier we can get both positive & negative half cycles which can thus be used for generating fixed positive & fixed negative voltages.

3.3 FILTER CAPACITOR

Even though half wave & full wave rectifier give DC output, none of them provides a constant output voltage. For this we require to smoothen the waveform received from the rectifier. This can be done by using a capacitor at the output of the rectifier this capacitor is also called as “FILTER CAPACITOR” or “SMOOTHING CAPACITOR” or “RESERVOIR CAPACITOR”. Even after using this capacitor a small amount of ripple will remain. We place the Filter Capacitor at the output of the rectifier the capacitor will charge to the peak voltage during each half cycle then will discharge its stored energy slowly through the load while the rectified voltage drops to zero, thus trying to keep the voltage as constant as possible.

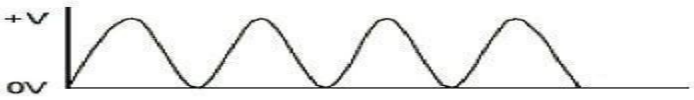

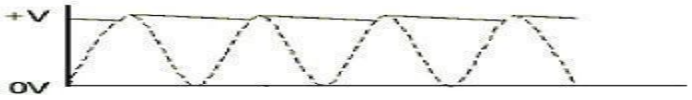

If we go on increasing the value of the filter capacitor then the Ripple will decrease. But then the costi increase. The value of the Filter capacitor depends on the current consumed by the circuit, the frequency of the wa & the accepted ripple.

$$C = \frac{V_r F}{I}$$

Where,

Vr = accepted ripple voltage. (should not be more than 10% of the voltage)
I = current consumed by the circuit in Amperes.
F = frequency of the waveform. A half wave rectifier has only one peak in one cycle so F=25hz

Where as a full wave rectifier has Two peaks in one cycle so F=100hz.

3.4 VOLTAGE REGULATOR

A Voltage regulator is a device which converts varying input voltage into a constant regulated output voltage. Voltage regulator can be of two types

1) Linear Voltage Regulator Also called as Resistive Voltage regulator because they dissipate the excessive voltage resistively as heat.
2) Switching Regulators, they regulate the output voltage by switching the Current ON/OFF very rapidly. Since their output is either ON or OFF it dissipates very low power thus achieving higher efficiency as compared to linear voltage regulators. But they are more complex & generate high noise due to their switching action. For low level of output power switching regulators tend to be costly but for higher output wattage they are much cheaper than linear regulators.

The most commonly available Linear Positive Voltage Regulators are the 78XX series where the XX indicates the output voltage. And 79XX series is for Negative Voltage Regulators.

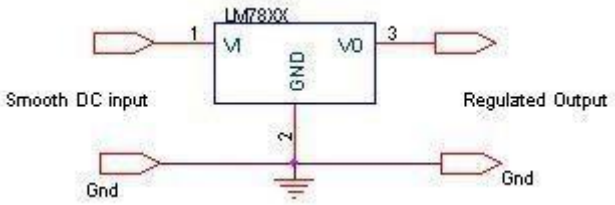

After filtering the rectifier output the signal is given to a voltage regulator. The maximum input voltage that can be applied at the input is 35V.Normally there is a 2-3 Volts drop across the regulator so the input voltage should be at least 2-3 Volts higher than the output voltage. If the input voltage gets below the Vmin of the regulator due to the ripple voltage or due to any other reason the voltage regulator will not be able to produce the correct regulated voltage.

3.5 Circuit diagram:

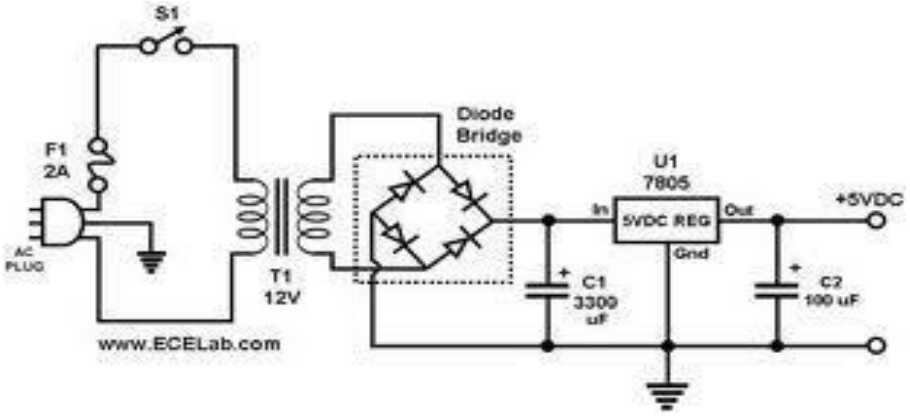

Fig 3.2 Circuit Diagram of power supply

3.6 IC 7805:

7805 is an integrated three-terminal positive fixed linear voltage regulator. It supports an input voltage of 10 volts to 35 volts and output voltage of 5 volts. It has a current rating of 1 amp although lower current models are available. Its output voltage is fixed at 5.0V. The 7805 also has a built-in current limiter as a safety feature. 7805 is manufactured by many companies, including National Semiconductors and Fairchild Semiconductors. The 7805 will automatically reduce output current if it gets too hot. The last two digits represent the voltage; for instance, the 7812 is a 12-volt regulator. The 78xx series of regulators is designed to work in complement with the 79xx series of negative voltage regulators in systems that provide both positive and negative regulated voltages, since the 78xx series can't regulate negative voltages in such a system. The 7805 & 78 is one of the most common and well-known of the 78xx series regulators, as it's small component count and medium-power regulated 5V make it useful for powering TTL devices.

3.7 LCD (Liquid Cristal Display):

A liquid crystal display (LCD) is a thin, flat display device made up of any number of colour or monochrome pixels arrayed in front of a light source or reflector. Each pixel consists of a column of liquid crystal molecules suspended between two transparent electrodes, and two polarizing filters, the axes of polarity of which are perpendicular to each other. Without the liquid crystals between them, light passing through one would be blocked by the other. The liquid crystal twists the polarization of light entering one filter to allow it to pass through the other.

A program must interact with the outside world using input and output devices that communicate directly with a human being. One of the most common devices attached to an controller is an LCD display. Some of the most common LCDs connected to the controllers are 16X1, 16x2 and 20x2 displays. This

means 16 characters per line by 1 line 16 characters per line by 2 lines and 20 characters per line by 2 lines, respectively.

Many microcontroller devices use 'smart LCD' displays to output visual information. LCD displays designed around LCD NT-C1611 module, are inexpensive, easy to use, and it is even possible to produce a readout using the 5X7 dots plus cursor of the display. They have a standard ASCII set of characters and mathematical symbols. For an 8-bit data bus, the display requires a +5V supply plus 10 I/O lines (RS RW D7 D6 D5 D4 D3 D2 D1 D0). For a 4-bit data bus it only requires the supply lines plus 6 extra lines(RS RW D7 D6 D5 D4). When the LCD display is not enabled, data lines are tri-state and they do not interfere with the operation of the microcontroller.

3.7.1 Features:

(1) Interface with either 4-bit or 8-bit microprocessor.

(2) Display data RAM

(3) 80x8 bits (80 characters).

(4) Character generator ROM

(5). 160 different 5 □□7 dot-matrix character patterns.

(6). □ Character generator RAM

(7) □8 different user programmed 5 □□7 dot-matrix patterns

(8). Display data RAM and character generator RAM may be

Accessed by the microprocessor.

(9) Numerous instructions

(10). Clear Display, Cursor Home, Display ON/OFF, Cursor ON/OFF,

Blink Character, Cursor Shift, Display Shift.

(11). Built-in reset circuit is triggered at power ON.

(12). Built-in oscillator.

Data can be placed at any location on the LCD. For 16×1 LCD, the address locations are:

POSITION		1	2	3	4	5	6	7	8	9	10	11	12	13	14	15	16
ADDRESS	LINE1	00	01	02	03	04	05	06	07	40	41	42	43	44	45	46	47

Fig :3.3 Address locations for a 1x16 line LCD

3.7.2 Shapes and sizes:

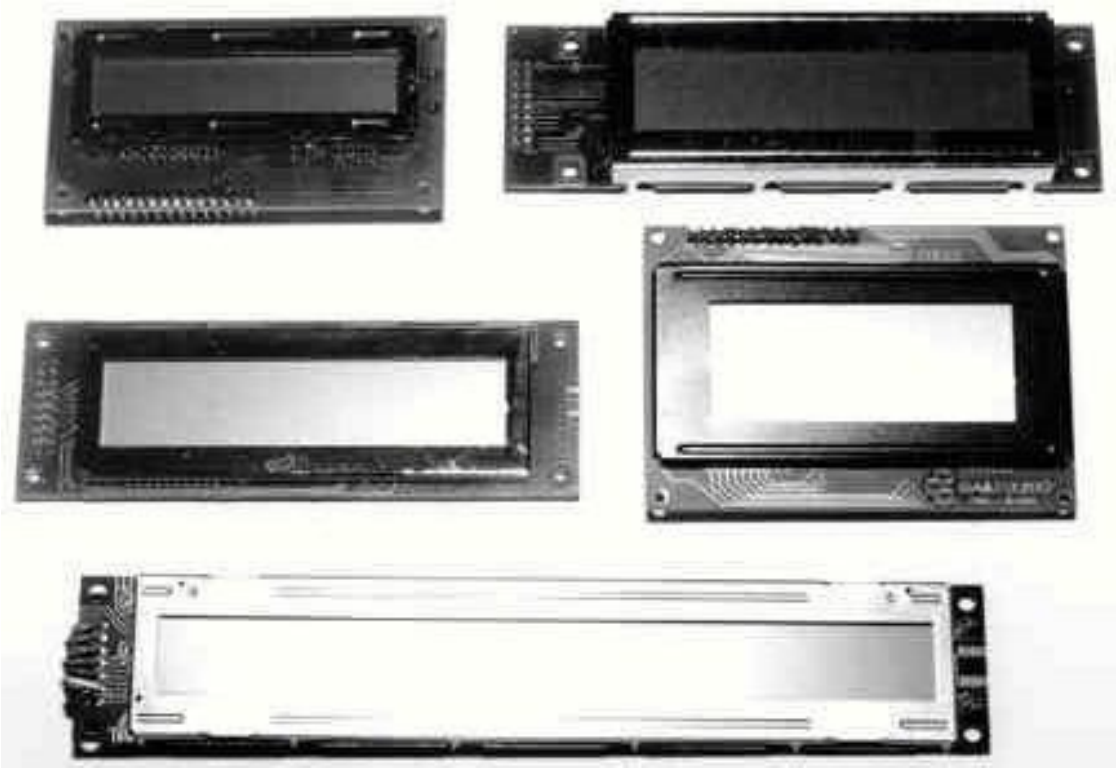

Even limited to character based modules,there is still a wide variety of shapes and sizes available. Line lenghs of 8,16,20,24,32 and 40 characters are all standard, in one-, two- and four-line versions.

Several different LC technologies exist. “supertwist” types, for example, offer Improved contrast and viewing angle over the older “twisted nematic” types. Some modules are available with back lighting, so so that they can be viewed in dimly-lit conditions. The back lighting may be either “electro-luminescent”, requiring a high voltage inverter circuit, or simple LED illumination.

3.8 Electrical block diagram:

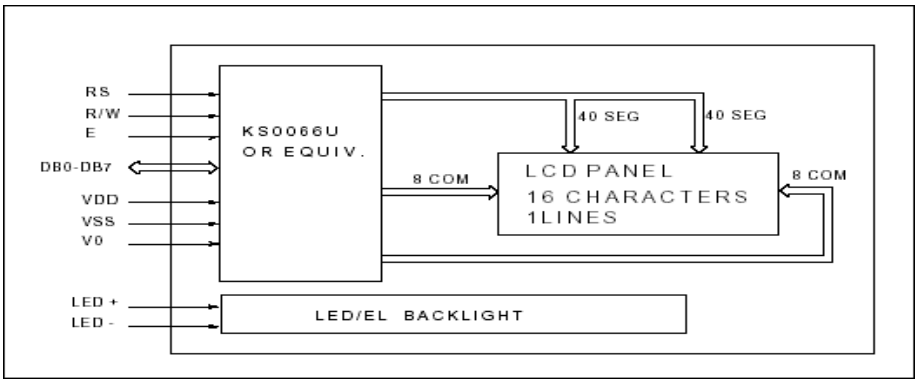

3.9 Power supply for lcd driving:

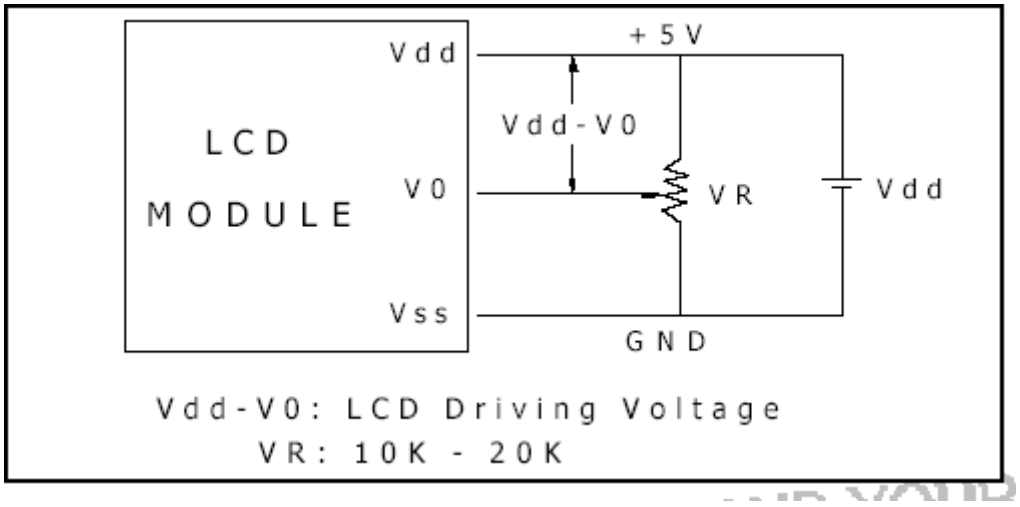

3.10 PIN DESCRIPTION:

Most LCDs with 1 controller have 14 Pins and LCDs with 2 controllers has 16 Pins (two pins are extra in both for back-light LED connections).

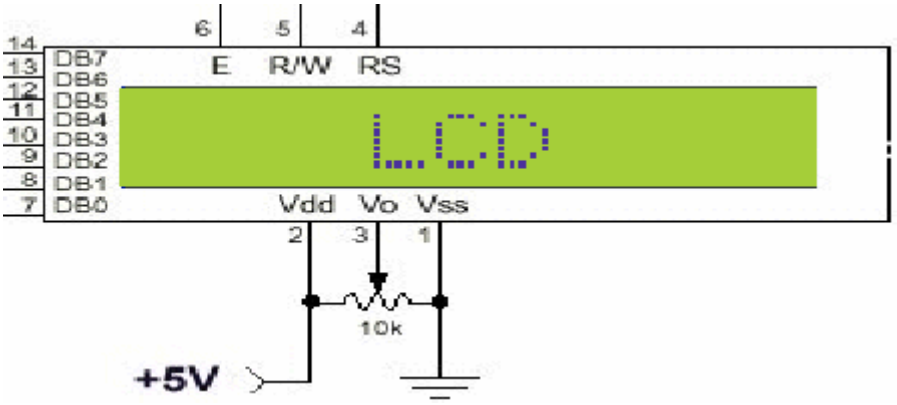

Fig:3.4 pin diagram of 1x16 lines lcd

PIN	SYMBOL	FUNCTION
1	Vss	Power Supply(GND)
2	Vdd	Power Supply(+5V)
3	Vo	Contrast Adjust
4	RS	Instruction/Data Register Select
5	R/W	Data Bus Line
6	E	Enable Signal
7-14	DB0-DB7	Data Bus Line
15	A	Power Supply for LED B/L(+)
16	K	Power Supply for LED B/L(-)

Table:3.1 pin description

3.11 CONTROL LINES:

EN:

Line is called "Enable." This control line is used to tell the LCD that you are sending it data. To send data to the LCD, your program should make sure this line is low (0) and then set the other two control lines and/or put data on the data bus. When the other lines are completely ready, bring EN high (1) and wait for the minimum amount of time required by the LCD datasheet (this varies from LCD to LCD), and end by bringing it low (0) again.

RS:

Line is the "Register Select" line. When RS is low (0), the data is to be treated as a command or special instruction (such as clear screen, position cursor, etc.). When RS is high (1), the data being sent is text data which should be displayed on the screen. For example, to display the letter "T" on the screen you would set RS high.

RW:

Line is the "Read/Write" control line. When RW is low (0), the information on the data bus is being written to the LCD. When RW is high (1), the program is effectively querying (or reading) the LCD. Only

one instruction ("Get LCD status") is a read command. All others are writing commands, so RW will almost always be low.

Finally, the data bus consists of 4 or 8 lines (depending on the mode of operation selected by the user). In the case of an 8-bit data bus, the lines are referred to as DB0, DB1, DB2, DB3, DB4, DB5, DB6, and DB7.

Logic status on control lines:

• E - 0 Access to LCD disabled

- 1 Access to LCD enabled

• R/W - 0 Writing data to LCD

- 1 Reading data from LCD

• RS - 0 Instructions

- 1 Character

Writing data to the LCD:

1) Set R/W bit to low

2) Set RS bit to logic 0 or 1 (instruction or character)

3) Set data to data lines (if it is writing)

4) Set E line to high

5) Set E line to low

Read data from data lines (if it is reading) on LCD:

1) Set R/W bit to high

2) Set RS bit to logic 0 or 1 (instruction or character)

3) Set data to data lines (if it is writing)

4) Set E line to high

5) Set E line to low

3.12 Entering Text:

First, a little tip: it is manually a lot easier to enter characters and commands in hexadecimal rather than binary (although, of course, you will need to translate commands from binary couple of sub-miniature hexadecimal rotary switches is a simple matter, although a little bit into hex so that you know which bits you are setting). Replacing the d.i.l. switch pack with a of re-wiring is necessary.

The switches must be the type where On = 0, so that when they are turned to the zero position, all four outputs are shorted to the common pin, and in position "F", all four outputs are open circuit.

All the available characters that are built into the module are shown in Table 3. Studying the table, you will see that codes associated with the characters are quoted in binary and hexadecimal, most significant bits ("left-hand" four bits) across the top, and least significant bits ("right-hand" four bits) down the left.

Most of the characters conform to the ASCII standard, although the Japanese and Greek characters (and a few other things) are obvious exceptions. Since these intelligent modules were designed in the "Land of the Rising Sun," it seems only fair that their Katakana phonetic symbols should also be incorporated. The more extensive Kanji character set, which the Japanese share with the Chinese, consisting of several thousand different characters, is not included!

Using the switches, of whatever type, and referring to Table 3, enter a few characters onto the display, both letters and numbers. The RS switch (S10) must be "up" (logic

when sending the characters, and switch E (S9) must be pressed for each of them. Thus the operational order is: set RS high, enter character, trigger E, leave RS high, enter another character, trigger E, and so on.

The first 16 codes in Table 3, 00000000 to 00001111, ($00 to $0F) refer to the CGRAM. This is the Character Generator RAM (random access memory), which can be used to hold user-defined graphics characters. This is where these modules really start to show their potential, offering such capabilities as bar graphs, flashing symbols, even animated characters. Before the user-defined characters are set up, these codes will just bring up strange looking symbols. Codes 00010000 to 00011111 ($10 to $1F) are not used and just display blank characters. ASCII codes "proper" start at 00100000 ($20) and end with 01111111 ($7F). Codes 10000000 to 10011111 ($80 to $9F) are not used, and 10100000 to 11011111 ($A0 to $DF) are the Japanese characters.

Table:3.2 Entering Text

Initialization by Instructions:

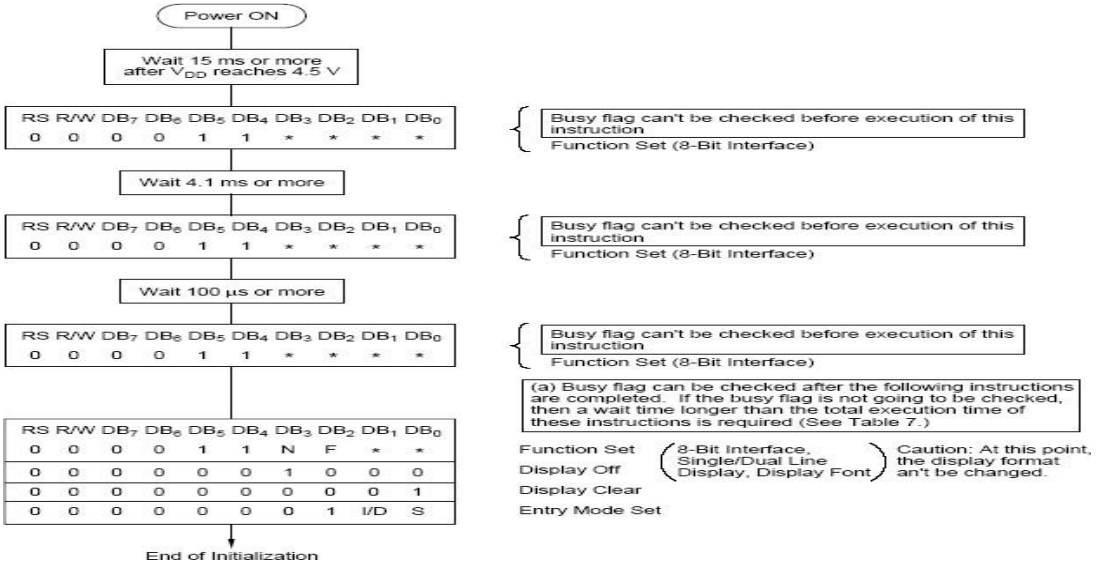

If the power conditions for the normal operation of the internal reset circuit are not satisfied, then executing a series of instructions must initialize LCD unit. The procedure for this initialization process is as above show.

3.13 DHT11:

Predictive maintenance (PDM) has revolutionized how industries approach equipment maintenance, making it more data-driven and efficient. By leveraging advanced technologies such as sensors, data analytics, machine learning, and artificial intelligence, PdM systems can forecast potential failures before they occur. This proactive approach reduces unplanned downtime, lowers maintenance costs, and enhances operational efficiency.

One sensor widely used in predictive maintenance, especially in environments where monitoring environmental conditions is crucial, is the **DHT11 sensor**. The DHT11 is a low-cost, digital sensor designed to measure temperature and humidity, two critical parameters that can significantly influence the performance of industrial machinery and equipment. This paper delves into the importance of the DHT11 sensor in the context of predictive maintenance, its functionalities, advantages, and limitations, and its integration into industrial systems.

3.13.1 Overview of Predictive Maintenance (PdM)

3.13.2 The Importance of Predictive Maintenance

Predictive maintenance involves the use of condition-monitoring tools and techniques to predict when equipment failure might occur. The core idea behind PdM is to use sensor data and advanced analytics to detect signs of deterioration in equipment, allowing maintenance teams to take corrective actions before an actual failure takes place.

The key advantages of predictive maintenance include:

- **Reduced Downtime**: By predicting when a failure might occur, organizations can schedule maintenance activities during off-peak hours, thus avoiding unscheduled downtime that could affect production.
- **Cost Reduction**: Predictive maintenance reduces the need for unnecessary maintenance and repairs, ultimately saving costs associated with spare parts, labor, and equipment replacements.
- **Improved Equipment Lifespan**: Timely interventions prevent overuse of equipment and help extend the lifespan of machinery by addressing potential problems before they lead to extensive damage.

3.13.3 How Sensors Play a Role in PdM

Sensors are integral to predictive maintenance systems, as they collect real-time data on various operational parameters such as temperature, vibration, pressure, and humidity. This data provides critical insights into the health of machinery and helps identify anomalies that could indicate potential failure points.

Among the numerous types of sensors, the **DHT11 sensor**, which measures temperature and humidity, plays a crucial role in many industrial applications, especially those where environmental conditions affect machinery performance.

3.14 DHT11 Sensor Overview

3.14.1 Features of DHT11

The DHT11 is a simple and cost-effective digital sensor designed to measure temperature and humidity. Though not the most advanced sensor in terms of accuracy or range, it serves as an entry-level option for many industrial applications. Below are its key features:

- **Temperature Range**: 0°C to 50°C (with a precision of ±2°C)
- **Humidity Range**: 20% to 90% RH (relative humidity) (with a precision of ±5% RH)
- **Operating Voltage**: 3.5V to 5.5V
- **Output**: Digital signal
- **Interface**: 1-wire digital output
- **Sampling Rate**: Once every 1 to 2 seconds

Despite being a basic sensor, the DHT11 is widely used due to its affordability, simplicity, and ability to provide crucial data about environmental conditions.

3.14.2 How the DHT11 Works

The DHT11 operates on a basic principle: it uses a thermistor and a capacitive humidity sensor to measure the temperature and relative humidity of the environment. When power is supplied, the sensor takes a measurement and sends the results in a digital format. The sensor communicates via a single-wire bus, making it easy to interface with microcontrollers or microprocessors such as Arduino, Raspberry Pi, and other industrial controllers.

The sensor contains a calibration system that processes the data from the humidity and temperature sensing elements and converts it into a digital signal that can be interpreted by external systems.

3.15 Role of DHT11 in Industrial Predictive Maintenance

3.15.1 Impact of Temperature and Humidity on Industrial Equipment

Temperature and humidity are critical factors in many industrial environments, as they influence the performance, efficiency, and lifespan of equipment. For example:

- **Electrical Equipment**: High humidity levels can cause condensation inside electrical components, leading to short circuits, corrosion, and failure.
- **Mechanical Equipment**: Temperature fluctuations can affect the lubrication and material properties of machinery, potentially causing overheating, expansion, or contraction of moving parts, leading to wear and tear.
- **Rotating Machinery**: Motors, pumps, and fans can become less efficient or suffer from overheating if they are exposed to high temperatures or humidity levels.

In these applications, monitoring and controlling temperature and humidity is crucial to prevent operational inefficiencies and avoid catastrophic failures. The DHT11 sensor is particularly useful in environments where temperature and humidity levels need to be monitored in real time.

3.15.2 DHT11 in Environmental Monitoring for PdM

DHT11 sensors can be used in predictive maintenance systems to monitor the environmental conditions surrounding industrial equipment. If temperature and humidity exceed or fall below acceptable thresholds, the sensor can trigger an alert, allowing maintenance teams to take corrective action before equipment performance is impacted.

3.15.3 Integration with IoT for Real-time Data Collection

One of the most powerful features of the DHT11 sensor is its ability to be easily integrated into Internet of Things (IoT) platforms. In a typical PdM setup, DHT11 sensors are deployed across a production facility, connected to a central monitoring system that collects data in real time. This data is sent to a cloud-based platform or an edge computing unit for analysis, where it is correlated with other operational data from the machinery.

For example, if a motor's temperature exceeds a predefined threshold, or the humidity levels in the surrounding environment rise unexpectedly, the system will flag the issue, indicating that an underlying

problem may be developing. This allows the maintenance team to intervene early and mitigate the risk of a failure.

3.15.4 Machine Learning Integration for Predictive Analytics

When integrated into a larger predictive maintenance system, the DHT11 sensor's temperature and humidity data can be used alongside other sensor data, such as vibration or pressure, to train machine learning models. These models can detect patterns in environmental conditions that typically precede equipment failure. For instance, historical data may reveal that a high humidity level combined with a spike in temperature correlates with the failure of a motor's bearings. By training a model on this data, the system can forecast future failures and schedule maintenance activities in advance.

3.15.5 Use Cases in Various Industries

The DHT11 sensor is deployed in several industrial sectors for environmental monitoring and predictive maintenance. Some examples include:

- **Manufacturing**: In factories where equipment is sensitive to temperature and humidity fluctuations (e.g., in paint booths, ovens, or drying machines), DHT11 sensors help ensure that conditions remain within the optimal range to prevent quality issues and equipment breakdowns.
- **Energy**: In power plants or energy production facilities, temperature and humidity levels are monitored in turbine rooms, transformers, and other critical infrastructure to prevent overheating and ensure the equipment operates at peak efficiency.
- **Food Processing**: The food industry relies on precise environmental control. DHT11 sensors can be used in warehouses, storage areas, and processing plants to maintain proper humidity and temperature levels, ensuring food quality and safety.

3.16 Advantages and Limitations of the DHT11

Sensor Advantages

- **Low Cost**: The DHT11 is inexpensive, making it an attractive option for small- to medium-sized businesses or pilot PdM projects.
- **Ease of Use**: The sensor is easy to integrate with microcontrollers like Arduino and Raspberry Pi, and it provides a straightforward interface for system developers.
- **Wide Availability**: DHT11 sensors are readily available and widely used, making them a common choice for industrial applications.

- **Real-time Monitoring**: With its quick data sampling rate, the DHT11 sensor provides real-time feedback, allowing for timely decision-making in predictive maintenance systems.

Limitations

- **Limited Accuracy**: The DHT11 has a limited temperature accuracy of ±2°C and a humidity accuracy of ±5% RH. In applications where high precision is necessary, more advanced sensors (such as the DHT22 or SHT35) may be preferred.
- **Limited Range**: The DHT11 sensor operates within a restricted temperature and humidity range (0°C to 50°C and 20% to 90% RH), which may not be suitable for extreme environments.
- **Slow Response Time**: While adequate for many applications, the DHT11 sensor has a relatively slow response time compared to more advanced sensors, which may affect its effectiveness in high-speed monitoring systems.

3.17 Future Directions

The DHT11 sensor, though basic in comparison to other advanced sensors, plays a key role in predictive maintenance systems by providing essential environmental data. However, its limited range and accuracy can hinder its use in critical applications. Future developments in predictive maintenance systems may involve:

- **Integration with More Advanced Sensors**: While the DHT11 can handle basic environmental monitoring, more advanced sensors (such as the DHT22 or SHT35) may become more prevalent for systems requiring higher accuracy or a broader range of environmental conditions.
- **Advanced Analytics**: The combination of data from DHT11 sensors with other types of sensors (vibration, temperature, pressure) and machine learning models will continue to improve the accuracy and predictive power of PdM systems.
- **Miniaturization and Cost Reduction**: As sensor technology advances, the DHT11's size may decrease, making it easier to integrate into more complex systems without significantly increasing costs.

3.18 CLOUD:

3.18.1 Understanding Predictive Maintenance

The Evolution of Maintenance Strategies

Traditional maintenance strategies, such as corrective and preventive maintenance (PM), have their limitations. In corrective maintenance, equipment is repaired only after a failure occurs, leading to unplanned downtime and potentially expensive repairs. Preventive maintenance, on the other hand, involves scheduled maintenance regardless of the equipment's actual condition, which often results in unnecessary downtime and higher operational costs.

Predictive maintenance (PdM) emerged as an improvement over these traditional approaches. PdM relies on real-time data from sensors embedded in equipment to continuously monitor its health and performance. By applying data analytics, machine learning algorithms, and historical data, PdM systems can forecast when an asset is likely to fail and trigger maintenance activities just in time to prevent breakdowns. This approach not only minimizes unplanned downtime but also optimizes the scheduling of maintenance tasks, thus reducing costs and improving efficiency.

Key Technologies Behind Predictive Maintenance

The backbone of predictive maintenance is a combination of several cutting-edge technologies:

- **Internet of Things (IoT)**: IoT devices, such as sensors and connected machinery, enable real-time data collection on various parameters like temperature, vibration, pressure, and humidity. These devices provide the raw data required for predictive maintenance models.
- **Machine Learning (ML) and Artificial Intelligence (AI)**: ML and AI algorithms analyze sensor data to detect patterns, predict failures, and optimize maintenance schedules. Supervised and unsupervised learning methods are used to detect anomalies and assess the remaining useful life (RUL) of equipment.
- **Big Data Analytics**: Predictive maintenance involves processing vast amounts of data, often referred to as "big data." These datasets include historical operational data, sensor readings, and environmental conditions that need to be processed efficiently to provide actionable insights.
- **Cloud Computing**: Cloud computing offers scalable storage, processing power, and advanced analytics capabilities, which are essential for managing the vast amounts of data generated by PdM systems. The cloud enables real-time data processing, remote monitoring, and seamless integration of data across multiple facilities.

3.19 Cloud Computing in Industrial Predictive Maintenance

Introduction to Cloud Computing

Cloud computing refers to the delivery of computing services—including storage, processing, databases, and software—over the internet. Instead of relying on on-premise infrastructure, businesses can use cloud platforms to access computing resources on-demand and pay only for what they use. The cloud allows companies to scale their infrastructure easily, providing flexibility and cost savings.

Cloud computing plays a crucial role in predictive maintenance by offering a centralized, scalable platform for data storage and analysis. It facilitates the processing of large volumes of data from IoT devices and sensors, which is essential for generating accurate predictions and actionable insights.

Cloud-Enabled Predictive Maintenance

In a cloud-enabled predictive maintenance system, sensor data is continuously uploaded to the cloud for storage and analysis. Once in the cloud, the data can be processed by machine learning algorithms, which evaluate the data to detect patterns or anomalies indicative of potential failures. Cloud platforms can also host predictive models that assess the remaining useful life (RUL) of machinery and generate maintenance recommendations.

3.20 Key Components of Cloud-Enabled PdM Systems:

- **Data Collection**: IoT sensors installed on machinery collect real-time data on factors such as temperature, pressure, and vibration. This data is transmitted to the cloud for storage and analysis.
- **Data Storage and Management**: Cloud storage systems provide a centralized location for vast amounts of operational data. Cloud providers use robust, scalable infrastructure to store data, ensuring it remains secure and easily accessible.
- **Data Analytics and Processing**: Cloud platforms host machine learning algorithms and data analytics tools that process the data. Predictive models identify anomalies, trends, and patterns in the data to forecast equipment failures.
- **Visualization and Reporting**: Cloud platforms provide dashboards and reporting tools that allow maintenance teams to visualize equipment health, track performance, and monitor maintenance schedules in real time.

- **Remote Monitoring and Management**: Cloud-based systems enable real-time monitoring of equipment across multiple locations. Maintenance teams can access performance data, review maintenance schedules, and manage interventions remotely, reducing the need for on-site visits.

3.21 Benefits of Cloud-Based Predictive Maintenance

3.21.1 Scalability

One of the primary advantages of using cloud computing for predictive maintenance is scalability. Industrial operations often involve large-scale systems with hundreds or even thousands of machines across multiple locations. Cloud platforms can easily scale to accommodate vast amounts of data from all these devices, ensuring that businesses can collect, store, and process data at scale.

With cloud computing, companies can expand their data storage and processing capabilities without the need for significant investments in on-premise infrastructure. Cloud service providers offer pay-as-you-go pricing models, which allow businesses to pay only for the resources they use, making it a cost-effective solution for businesses of all sizes.

3.21.2 Real-Time Data Processing

Cloud computing enables real-time data collection and processing, which is critical for predictive maintenance. By continuously monitoring equipment health and performance, cloud-based systems can quickly detect anomalies or warning signs of failure. This provides maintenance teams with up-to-date insights, allowing them to take timely actions and prevent breakdowns.

3.21.3 Improved Collaboration and Remote Access

Cloud-based predictive maintenance systems allow for easy collaboration between teams, regardless of their physical location. Maintenance teams, operations staff, and management can access data, review performance metrics, and make decisions from any device with an internet connection. This remote accessibility is particularly valuable for organizations with operations in multiple geographic locations or industries that require 24/7 monitoring.

3.21.4 Reduced IT Infrastructure Costs

With cloud computing, businesses can reduce the costs associated with maintaining on-premise IT infrastructure. There is no need for large-scale data centers, hardware maintenance, or software updates. Cloud providers handle infrastructure management, ensuring that systems remain secure and up to date. This allows businesses to focus on their core operations rather than investing in IT management.

3.21.5 Enhanced Data Security

Cloud service providers typically offer robust security measures, including encryption, firewalls, and access control, to ensure that industrial data remains protected. Cloud-based predictive maintenance systems can also offer disaster recovery and backup solutions, ensuring that critical operational data is not lost in the event of a system failure.

3.21.6 Predictive Analytics and Machine Learning

Cloud platforms are often equipped with advanced analytics tools and machine learning capabilities that enable predictive modelling and anomaly detection. These tools can analyze historical data to build predictive models that forecast the remaining useful life (RUL) of equipment and predict when failures are likely to occur. The insights generated from machine learning models can help businesses optimize their maintenance schedules, reduce unnecessary interventions, and minimize downtime.

3.22 Real-World Applications of Cloud-Based Predictive Maintenance

Manufacturing Industry

In the manufacturing sector, cloud-based predictive maintenance is being used to monitor the health of critical machinery, including CNC machines, pumps, and motors. By analysing sensor data in real-time, cloud systems can predict failures such as motor overheating or bearing wear, allowing maintenance teams to perform maintenance just before the equipment fails.

For example, a cloud-based PdM system could alert a factory's maintenance team when a machine's vibration levels exceed safe limits, prompting a timely inspection and preventing costly unplanned downtime.

Energy Sector

In power plants, both conventional and renewable, predictive maintenance is increasingly being powered by cloud computing. For example, in wind turbine operations, cloud-based PdM systems monitor environmental factors such as wind speed, temperature, and humidity, along with mechanical factors like turbine blade wear and generator performance. Predictive models hosted on the cloud help identify maintenance needs before major breakdowns occur, ensuring smooth energy production and preventing unscheduled outages.

Transportation and Fleet Management

Fleet management companies use cloud-based PdM systems to monitor the health of their vehicles in real-time. Sensors in trucks, buses, and delivery vehicles provide data on engine temperature, fuel efficiency, tire pressure, and other critical parameters. By analysing this data in the cloud, fleet managers can predict maintenance needs, such as tire replacements or engine repairs, thus preventing breakdowns and optimizing fleet operations.

Healthcare and Medical Equipment

Hospitals and healthcare facilities use cloud-based predictive maintenance to monitor the performance of critical medical equipment such as MRI machines, CT scanners, and ventilators. These systems collect real-time data on usage, performance, and environmental conditions and send it to the cloud for analysis. Predictive models can identify issues such as overheating, component wear, or power fluctuations, allowing healthcare providers to schedule maintenance before equipment failure disrupts operations.

Challenges and Future Directions

While cloud-based predictive maintenance offers many benefits, there are several challenges that need to be addressed:

- **Data Privacy and Security**: Sensitive operational data may be subject to privacy regulations, particularly in industries like healthcare or finance. Ensuring the security and confidentiality of data stored in the cloud is paramount.
- **Integration with Legacy Systems**: Many industries still rely on legacy systems that may not be compatible with modern cloud-based solutions. Integrating these systems with newer cloud platforms can be complex and costly.
- **Connectivity Issues**: Cloud-based PdM systems depend on reliable internet connectivity. In remote or rural locations with limited connectivity, real-time data processing and cloud-based analytics may be hindered.

Despite these challenges, the future of cloud-enabled predictive maintenance is promising. As technologies such as 5G networks, edge computing, and AI continue to evolve, cloud-based PdM systems will become even more efficient, accessible, and secure.

3.23 VIBRATION:

What is Vibration Monitoring?

Vibration monitoring involves measuring the vibrations produced by machinery or equipment during its operation. In a typical industrial setting, machinery such as motors, pumps, fans, and compressors are often in continuous motion, and the forces involved can generate vibrations. By analysing these vibrations, maintenance teams can detect early indicators of mechanical problems.

The frequency, amplitude, and patterns of vibrations provide critical insights into the operating condition of the machinery. For example, vibrations that deviate from the normal operating range can indicate misalignments, imbalances, loose components, or bearing wear. Monitoring vibration signals allows maintenance teams to identify and address these issues before they escalate into costly failures or unplanned downtime. **Vibration Signals and Their Significance**

Vibrations can be measured in terms of amplitude (the magnitude of the vibration), frequency (the rate at which the vibration occurs), and phase (the timing or position of the vibration). By using sensors such as accelerometers, proximity probes, or velocity sensors, these vibrations are captured and analysed.

Key types of vibration signals and their significance include:

- **Amplitude**: The strength or magnitude of the vibration. High amplitude vibrations can indicate significant mechanical problems like imbalance or misalignment.
- **Frequency**: The frequency of vibrations is often related to the operational speed of the machinery or the system's natural resonant frequencies. If the frequency deviates from expected norms, it may signal a fault such as bearing damage or a misaligned shaft.
- **Harmonics**: Harmonics are multiples of the fundamental vibration frequency. Increased harmonic activity can indicate problems like gear misalignment or faults in rotating equipment.
- **Time-domain and Frequency-domain Analysis**: Time-domain analysis looks at raw vibration data, while frequency-domain analysis transforms the vibration signal into the frequency spectrum. Peaks in the frequency spectrum are often correlated with specific mechanical faults, such as bearing failure, imbalance, or misalignment.

Key Components of Vibration Monitoring Systems

A typical vibration monitoring system involves several key components that work together to detect and diagnose faults:

- **Sensors**: Vibration sensors, typically accelerometers or velocity sensors, are mounted on machinery to measure the vibrations produced by the equipment.
- **Signal Conditioning**: The raw vibration signal from the sensor is often conditioned (filtered and amplified) to make it suitable for analysis.
- **Data Acquisition System**: The conditioned signal is sent to a data acquisition system, which converts the analog signal into a digital format for analysis.
- **Analysis Software**: Specialized software is used to analyse the vibration data. This software can perform time-domain and frequency-domain analysis, detect patterns, and apply diagnostic algorithms to identify potential faults.
- **Alerting System**: Once an issue is detected, the system can generate alerts, triggering preventive maintenance activities or immediate intervention.

How Vibration Monitoring Contributes to Predictive Maintenance

Early Detection of Mechanical Problems

Vibration monitoring plays a crucial role in early fault detection. Many mechanical problems, such as misalignment, imbalance, or bearing wear, create characteristic vibration signatures that can be detected before the failure becomes catastrophic. By continuously monitoring vibration levels, the system can compare the current state of the equipment with baseline data or predefined thresholds to identify anomalies.

For example, in a motor, an imbalance can cause uneven rotation and increased vibrations. By monitoring the vibration amplitude, the system can detect the imbalance early, allowing maintenance teams to correct the issue before it leads to more severe damage, such as a motor burnout.

Predictive Analytics for Failure Forecasting

By collecting vibration data over time, predictive maintenance systems can use machine learning and statistical models to forecast potential failures. Over time, these systems learn the typical vibration patterns for various pieces of equipment and can identify subtle changes that indicate early wear or degradation.

Using historical vibration data, the system can predict the remaining useful life (RUL) of a component, helping maintenance teams plan their interventions. For example, if a bearing's vibration frequency starts to shift, predictive models can estimate when the bearing is likely to fail, allowing maintenance teams to schedule a replacement during a convenient downtime window.

Real-Time Monitoring and Remote Access

Modern vibration monitoring systems, often integrated with IoT (Internet of Things) platforms, allow real-time data collection and analysis. Sensors continuously measure vibration levels and send the data to cloud-based platforms for analysis. Maintenance teams can access this data remotely from any device with an internet connection, providing real-time insights into the health of the equipment across various locations.

This remote monitoring capability is especially valuable for industries with geographically dispersed assets, such as oil and gas, where equipment may be located in remote or hazardous locations. With cloud-based vibration monitoring systems, operators can monitor equipment from anywhere, allowing for quicker decision-making and intervention.

Vibration Signature Analysis for Root Cause Diagnosis

In predictive maintenance, detecting the type of failure is just as important as predicting when the failure will occur. Vibration signature analysis helps identify the root cause of the problem by analysing the specific vibration patterns associated with various faults. Common faults detected through vibration analysis include:

- **Bearing Failures**: Bearings, when damaged, produce high-frequency vibrations due to increased friction and wear. A rise in high-frequency vibration can indicate the need for bearing replacement.
- **Imbalance**: Imbalance in rotating machinery, such as motors or fans, leads to vibrations at specific frequencies. Detecting such vibrations can alert operators to imbalance issues before they cause severe wear or failure.
- **Misalignment**: Misaligned shafts or couplings produce vibration signals at specific frequencies related to the operational speed. Vibration monitoring can help detect such misalignment, preventing damage to shafts, bearings, and other components.
- **Looseness**: Loose components, such as bolts or mounting parts, create characteristic vibration signatures. By monitoring vibration patterns, these issues can be detected and fixed before they cause more serious problems.

Benefits of Vibration Monitoring for Predictive Maintenance

Reduced Downtime

One of the most significant benefits of vibration monitoring in predictive maintenance is the reduction of unplanned downtime. By detecting problems early, vibration monitoring systems enable timely interventions, preventing equipment from failing unexpectedly. This allows for scheduled maintenance during non-peak times, minimizing disruptions to production processes.

Cost Savings

Vibration monitoring reduces the need for costly repairs or component replacements that result from catastrophic failures. Preventive maintenance based on vibration analysis can be much more cost-effective than emergency repairs. Additionally, early detection helps extend the lifespan of machinery by addressing issues before they cause irreversible damage.

Increased Equipment Lifespan

By detecting and addressing mechanical issues such as bearing wear, misalignment, or imbalance early on, vibration monitoring helps reduce the stress on machinery and components. This can extend the operational lifespan of the equipment and delay the need for expensive replacements.

Enhanced Safety

Unpredictable equipment failures in critical machinery can lead to safety hazards, especially in high-risk industries such as manufacturing, energy, and chemicals. Vibration monitoring systems help identify early signs of failure, allowing for safer operation and reducing the likelihood of hazardous events caused by equipment breakdowns.

Improved Maintenance Planning and Resource Allocation

Vibration monitoring enables better maintenance planning. With predictive analytics and real-time monitoring, maintenance teams can prioritize repairs based on the severity of detected issues. This improves resource allocation and ensures that maintenance activities are focused on the most critical problems.

Challenges of Vibration Monitoring

Sensor Installation and Placement

Proper installation and placement of vibration sensors are critical to obtaining accurate and reliable data. Sensors must be positioned at appropriate points on the machinery to capture the relevant vibration

frequencies. Incorrect sensor placement can lead to inaccurate readings and missed detections of potential faults.

Environmental Interference

In some industrial environments, external factors such as noise, temperature fluctuations, and electromagnetic interference can affect the accuracy of vibration measurements. Proper sensor calibration and signal filtering techniques are required to mitigate these issues and ensure the reliability of the data.

Data Overload

Vibration monitoring systems generate large amounts of data that need to be processed and analyzed. Without appropriate data management and analysis tools, organizations can experience data overload, making it difficult to identify meaningful trends and patterns. Efficient data processing and the use of machine learning algorithms are crucial to extracting actionable insights from the data.

High Initial Setup Costs

The initial cost of implementing a vibration monitoring system, including purchasing sensors, setting up data acquisition systems, and integrating the system with existing infrastructure, can be relatively high. However, the long-term benefits of reduced downtime and maintenance costs often outweigh the initial investment.

Applications of Vibration Monitoring in Various Industries

Manufacturing

In the manufacturing industry, vibration monitoring is used extensively to monitor motors, conveyors, pumps, and fans. Detecting vibrations caused by imbalance, misalignment, or bearing damage helps prevent costly breakdowns and ensures smooth operations.

Oil and Gas

In the oil and gas industry, vibration monitoring is crucial for maintaining the health of pumps, compressors, and turbines, especially in remote locations where equipment failure can lead to significant operational and financial losses.

Energy and Power Generation

Power plants rely on vibration monitoring to keep turbines, generators, and other critical machinery running smoothly. Early detection of issues such as imbalance or bearing wear helps prevent catastrophic failures and ensures the continuous generation of electricity.

Aerospace and Défense

In the aerospace industry, vibration monitoring is used to assess the condition of engines, actuators, and other critical components. Vibration analysis ensures the safety and reliability of aircraft systems, contributing to the prevention of failures during flight.

3.24 FIRE SENSOR:

Understanding Fire Sensors

Fire sensors, also known as fire detection sensors or fire alarms, are devices used to detect the presence of fire or hazardous heat in a given area. In industrial environments, these sensors are designed to detect heat, smoke, or gas emissions that could indicate the presence of a fire. They operate by sensing physical changes associated with a fire, such as elevated temperatures, smoke particulates, or combustion gases. When an abnormal level is detected, the fire sensor sends an alert to a central monitoring system to initiate preventive measures.

There are several types of fire sensors, each designed to detect specific indicators of fire:

- **Thermal Sensors**: These sensors measure changes in temperature. When the temperature exceeds a predefined threshold, they send an alert. This is typically used for detecting localized overheating or equipment malfunctions that could lead to a fire.
- **Smoke Detectors**: These detect smoke particles in the air and are commonly used in environments where the presence of smoke could indicate the onset of a fire.
- **Gas Sensors**: These sensors detect flammable gases or combustion by-products such as carbon monoxide (CO) and carbon dioxide (CO2), which can indicate a fire or explosion risk.
- **Infrared Sensors**: These sensors detect infrared radiation, which is emitted by hot surfaces and flames. They are often used in environments where detecting an open flame or heat from high-temperature equipment is critical.

How Fire Sensors Contribute to Predictive Maintenance

Fire sensors are integrated into predictive maintenance systems to offer real-time monitoring of equipment and processes that could lead to fires. In predictive maintenance, fire sensors continuously track temperature, smoke, and gas levels, analyzing trends and patterns in the data. These sensors can detect early signs of fire risks such as overheating, sparking, or fuel leakage before a full-scale fire develops.

Fire sensors can also help to predict component failures that increase the risk of fires. For example, an overheating motor could signal a malfunction in the electrical system that, if left unchecked, might lead to a fire. By identifying such risks early, fire sensors enable maintenance teams to take timely actions, such as adjusting equipment settings or replacing faulty components, thereby preventing fire outbreaks and ensuring the safety of the workplace.

Key Benefits of Fire Sensors in Predictive Maintenance

Fire sensors offer several benefits in predictive maintenance systems, particularly in terms of enhancing safety, reducing operational costs, and improving equipment reliability. Key benefits include:

- **Early Fire Detection**: Fire sensors allow for the early detection of fire risks, such as overheating, which can prevent full-scale fires from occurring. The faster a fire is detected; the quicker response teams can act to mitigate the risks.
- **Prevention of Downtime**: Fires often lead to unplanned downtime and costly repairs. By monitoring for early signs of fire risks, fire sensors reduce the likelihood of fires, minimizing the downtime that would otherwise be required for repairs and replacements.
- **Improved Safety**: By detecting fire risks in real-time, fire sensors ensure a safer working environment for employees. Fire-related accidents can be life-threatening, but early detection systems help safeguard both workers and machinery.
- **Lower Insurance Costs**: Businesses that integrate fire sensors into their PdM systems may benefit from reduced insurance premiums, as the presence of fire detection and prevention measures demonstrates a proactive approach to safety.
- **Extended Equipment Lifespan**: Regular monitoring and early intervention based on fire sensor data can help extend the life of machinery. Equipment that is prone to overheating or excessive heat buildup can be repaired before the issue leads to major failure, reducing wear and tear.

The Role of Fire Sensors in Industrial Settings

Manufacturing and Heavy Industry

In manufacturing and heavy industrial settings, fire sensors are vital for monitoring high-temperature machinery such as furnaces, boilers, and electrical panels. These machines often operate under extreme conditions, generating large amounts of heat that can lead to equipment malfunctions or fires. For example, in a steel mill, the risk of sparks or overheating from equipment like electric arc furnaces and conveyor belts is high, making fire sensors crucial for monitoring and detecting potential risks.

By integrating fire sensors into the predictive maintenance system, manufacturers can monitor the heat levels of critical equipment, such as motors, generators, and transformers. Overheating can be detected early, allowing maintenance teams to repair or replace parts before they cause fires, thus reducing risks to both workers and production lines.

Oil and Gas Industry

In the oil and gas industry, fire hazards are prevalent due to the flammable nature of materials handled and processed. Offshore drilling platforms, refineries, and pipelines are particularly susceptible to fires, which can result in severe consequences. Fire sensors play a critical role in detecting early signs of combustion, flammable gas leakage, or excessive heat in these environments.

For example, gas sensors can detect dangerous levels of methane, propane, or hydrogen sulphide, which are commonly found in oil and gas facilities. By monitoring for dangerous gas concentrations, fire sensors help prevent explosions and fires. In predictive maintenance systems, fire sensors can trigger an alert when abnormal temperature patterns or gas levels are detected, prompting maintenance teams to act before the situation escalates.

Chemical Processing and Pharmaceuticals

Chemical plants and pharmaceutical facilities handle volatile chemicals that are highly flammable. These substances, when exposed to heat or sparks, can cause chemical fires or explosions. Fire sensors are installed in areas where there is a high risk of such incidents, such as near chemical reactors, storage tanks, and distribution systems.

Smoke and gas detectors are commonly used in these industries to monitor the release of hazardous gases and chemicals. In a chemical processing plant, for example, an infrared sensor can detect the presence of heat from a chemical reaction, indicating a potential for fire. Predictive maintenance systems with fire sensors can help prevent accidents by identifying potential ignition sources and offering timely interventions, such as shutting down equipment or activating fire suppression systems.

Power Generation

In power generation, especially in nuclear, coal, and natural gas plants, fire hazards are particularly significant due to the large amount of heat and energy being produced. Fire sensors in these environments help monitor equipment such as turbines, electrical panels, and transformers, all of which are vulnerable to overheating, short circuits, and fire risks.

For instance, in a natural gas plant, the fire sensor system might use thermal sensors to detect heat levels in gas turbines and motors, which operate at high temperatures. If a potential fire hazard is identified, the system can alert operators to take immediate corrective actions. In nuclear plants, fire sensors are especially critical for ensuring the safety of sensitive equipment and preventing accidents that could have catastrophic consequences.

Types of Fire Sensors Used in Industrial Predictive Maintenance

Heat Sensors

Heat sensors are commonly used to detect temperature fluctuations above a predefined threshold, which could signal overheating or the presence of fire. These sensors can be placed on or near critical machinery, such as motors, bearings, or exhaust systems, to monitor temperature variations. Heat sensors are highly effective at detecting localized heat buildup, which can help predict potential fire risks before they spread.

Smoke Detectors

Smoke detectors are primarily used to identify smoke particles in the air, which are one of the earliest indicators of a fire. These detectors are often used in enclosed spaces, such as control rooms or equipment storage areas, where smoke could accumulate before the fire spreads. Smoke detectors can detect even small amounts of smoke, providing early warnings to prevent escalation.

Gas Sensors

Gas sensors are crucial in industries that deal with combustible gases. These sensors can detect hazardous gases like methane, hydrogen sulphide, carbon monoxide, or carbon dioxide, which may be indicative of a fire risk or gas leak. By continuously monitoring for dangerous gas concentrations, these sensors provide early warnings and help prevent explosions or fires due to gas accumulation.

Infrared Sensors

Infrared sensors detect radiation emitted by hot surfaces and flames. They are commonly used to monitor equipment that operates at high temperatures, such as furnaces, boilers, and turbines. These sensors are particularly valuable in environments where visible smoke is not a reliable indicator of fire, but the heat generated by an emerging fire could be detected by the infrared sensor.

Challenges of Implementing Fire Sensors in Predictive Maintenance

Environmental Factors

Fire sensors are susceptible to environmental factors such as temperature extremes, dust, humidity, and vibrations, which can affect their performance. In some industrial environments, these sensors must be specially designed to withstand harsh conditions. For instance, high levels of dust in a cement factory can interfere with smoke detectors, requiring specialized equipment to maintain sensitivity.

Calibration and Sensitivity

Fire sensors need to be calibrated correctly to ensure accurate readings. Over-sensitivity or under-sensitivity can lead to false alarms or missed detections. It is essential to strike a balance between sensitivity and the specific environmental conditions in which the sensor operates. Regular calibration and maintenance are required to maintain sensor accuracy.

Integration with Existing Systems

Integrating fire sensors into an existing predictive maintenance system may require significant modifications to infrastructure, especially in older industrial facilities. Compatibility with existing software, data acquisition systems, and alarm systems is critical for the seamless functioning of fire detection in predictive maintenance.

3.25 BMP2820(PRESSURE SENSOR):

Overview of Pressure Sensors in Industrial Settings

Pressure sensors are critical components in industrial systems where pressure changes can indicate mechanical problems, leaks, or malfunctions. In industries that rely on pressurized systems, such as oil and

gas, power generation, and manufacturing, monitoring the pressure within pipes, tanks, compressors, and other equipment is essential for ensuring safe and efficient operations.

Pressure changes can signal issues such as:

- **Leaks**: A drop in pressure may indicate a leak in the system, which, if left unchecked, can lead to significant damage, environmental hazards, or safety risks.
- **Blockages**: An increase in pressure in a pipe or machine could suggest a blockage or clog in the system that needs to be addressed to prevent failure.
- **Component Wear**: Deviation from normal pressure values can indicate that a component, such as a valve, pump, or compressor, is malfunctioning or wearing out.
- **System Imbalance**: Pressure sensors can help identify imbalances in a system that might lead to equipment failure if not addressed.

In predictive maintenance, pressure sensors play a key role by providing real-time data on the health of equipment and enabling maintenance teams to detect early warning signs of failure.

Benefits of Pressure Sensors in Predictive Maintenance

Pressure sensors offer several benefits when integrated into predictive maintenance strategies:

- **Early Detection of Problems**: By continuously monitoring pressure, pressure sensors can detect anomalies such as sudden drops or increases in pressure. Early detection allows maintenance teams to address issues before they lead to system failures.
- **Minimization of Unplanned Downtime**: The data provided by pressure sensors can help schedule maintenance during non-peak times, reducing unplanned downtime and optimizing production efficiency.
- **Improved Equipment Life**: By predicting equipment failures early, maintenance teams can take corrective actions, which can extend the operational lifespan of machinery.
- **Increased Safety**: By identifying risks such as overpressure conditions, pressure sensors help prevent hazardous situations, ensuring a safer working environment for operators and reducing the risk of accidents.
- **Cost Savings**: Predictive maintenance using pressure sensors helps reduce repair costs by allowing for scheduled maintenance and component replacement. This can avoid the costly consequences of unplanned breakdowns and emergency repairs.

The BMP2820 Pressure Sensor: Key Features and Specifications

Introduction to BMP2820 Sensor

The BMP2820 is a small, highly accurate pressure sensor from Bosch that provides precise measurements of pressure in industrial environments. This sensor is designed to be robust and reliable, making it suitable for use in harsh environments where reliability and long-term performance are crucial. The BMP2820 can measure pressure within a specific range and output a digital signal that can be easily integrated with a variety of predictive maintenance systems.

Key Features of the BMP2820

The BMP2820 sensor is designed with several key features that make it ideal for use in predictive maintenance applications:

- **High Accuracy**: The BMP2820 offers high precision and low measurement error, making it ideal for applications that require accurate pressure data.
- **Wide Pressure Range**: The BMP2820 is capable of measuring pressure in a wide range of environments, making it versatile and adaptable to different industrial systems. The sensor can measure both absolute and differential pressures.
- **Low Power Consumption**: The BMP2820 is designed with low power consumption, allowing it to be used in battery-operated applications without draining energy quickly.
- **Small Form Factor**: The compact size of the BMP2820 makes it easy to integrate into various machines and systems, even in space-constrained environments.
- **Digital Output**: The BMP2820 provides a digital output, which allows for easy integration into modern digital control systems and predictive maintenance platforms. This digital communication is highly reliable and ensures accurate data transmission.
- **High Durability**: The BMP2820 is engineered to withstand harsh industrial environments, including exposure to dust, moisture, and extreme temperatures. This makes it suitable for a wide range of industries and applications.
- **Pressure Measurement for Different Media**: The sensor is capable of measuring pressures for both gaseous and liquid media, expanding its application across various industries such as oil and gas, water treatment, and manufacturing.

Specifications

- **Pressure Range**: 260 to 1260 hope (hectopascals) or 2.6 to 12.6 bar (depending on the model).
- **Accuracy**: 1.0% full-scale output.
- **Temperature Range**: Operates in a wide temperature range, typically from -40°C to +85°C.
- **Output Signal**: Digital I2C or SPI output for easy integration with controllers or monitoring systems.
- **Size**: Small and compact form factor, ideal for integration into compact spaces.
- **Response Time**: Fast response time, making it suitable for dynamic industrial applications.

Applications of BMP2820 Pressure Sensor in Predictive Maintenance

Manufacturing Industry

In manufacturing, pressure sensors like the BMP2820 are used to monitor a variety of systems, including hydraulic presses, pneumatic systems, and fluid delivery systems. These systems rely on precise pressure levels for optimal performance. By continuously monitoring pressure, the BMP2820 sensor can help detect issues such as:

- **Hydraulic System Leaks**: A sudden drop in pressure could indicate a leak in a hydraulic system, which could lead to system failure or loss of efficiency if not addressed.
- **Imbalanced Pneumatic Systems**: Overpressure or under pressure in pneumatic systems can cause equipment malfunctions. Monitoring these pressure fluctuations helps detect these issues early and prevents damage to equipment.
- **Compressor Health**: Monitoring pressure in compressors can help predict when they are underperforming or when components such as valves or seals need attention, reducing the risk of compressor failure.

By integrating the BMP2820 pressure sensor into a predictive maintenance system, manufacturers can ensure that these critical systems are always operating within optimal pressure ranges, reducing the likelihood of unexpected breakdowns.

Oil and Gas Industry

The oil and gas industry often operates in extreme environments, where pressure changes can signal potentially dangerous situations, such as gas leaks, pipeline blockages, or valve failures. In this context, the BMP2820 sensor plays a vital role by monitoring pressure in pipelines, valves, and pressure vessels.

Applications in this industry include:

- **Pipeline Monitoring**: Pressure sensors can detect a sudden drop in pressure, which may indicate a rupture, leak, or blockage in a pipeline. Early detection allows for immediate intervention, reducing environmental damage and safety risks.
- **Pressure Relief Systems**: The BMP2820 can be used to monitor pressure in safety relief systems, ensuring that the system is operating correctly and can prevent overpressure conditions that may lead to catastrophic equipment failures.

Power Generation

Power plants, particularly those that rely on steam turbines, gas turbines, or boilers, must maintain specific pressure levels for safe and efficient operations. The BMP2820 can be used to monitor pressures in these systems, helping identify potential problems such as:

- **Boiler Pressure Monitoring**: Monitoring the pressure in boilers is critical to ensure safe operation. Pressure sensors can detect changes that may indicate blockages, leaks, or overpressure conditions.
- **Turbine Efficiency**: The sensor can monitor the pressure in steam or gas turbines to ensure that they are functioning efficiently and to predict when maintenance may be needed before failure.

In power generation, predictive maintenance enabled by pressure sensors can prevent dangerous failures, reduce downtime, and extend the life of expensive equipment.

Water Treatment Plants

In water treatment plants, maintaining optimal pressure in pumps, pipes, and filtration systems is crucial for ensuring smooth operations. The BMP2820 pressure sensor can help monitor pressure changes in the distribution system, alerting operators to issues such as:

- **Pipe Blockages**: A sudden change in pressure can indicate a blockage in the system that, if left unchecked, could lead to significant operational disruptions.
- **Pump Performance**: Pressure sensors can monitor pump pressure to ensure that the pumps are operating efficiently and not underperforming, which could lead to system failures.

By using the BMP2820 sensor, water treatment facilities can enhance operational efficiency and reduce the likelihood of unexpected breakdowns.

Challenges and Limitations

While the BMP2820 pressure sensor offers several benefits, there are also challenges in implementing pressure sensor-based predictive maintenance systems:

Environmental Factors

In some industrial environments, extreme temperatures, high humidity, or chemical exposure may affect the accuracy and lifespan of pressure sensors. For instance, high moisture levels in some applications may require additional protective coatings for the sensor to prevent corrosion.

Sensor Calibration

Proper calibration of pressure sensors is essential for accurate measurements. Inaccurate calibration can lead to faulty readings and incorrect predictions about equipment health. Ensuring that the BMP2820 sensor is regularly calibrated and maintained is critical to the success of the predictive maintenance system.

Integration with Existing Systems

For predictive maintenance to be effective, pressure sensors must be integrated seamlessly with existing control systems and data analytics platforms. This may require specialized hardware and software integration, which could add complexity and costs to the system.

CHAPTER -4

4. CONTROLLER

4.1 NODE MCU:

WHAT is Node MCU?

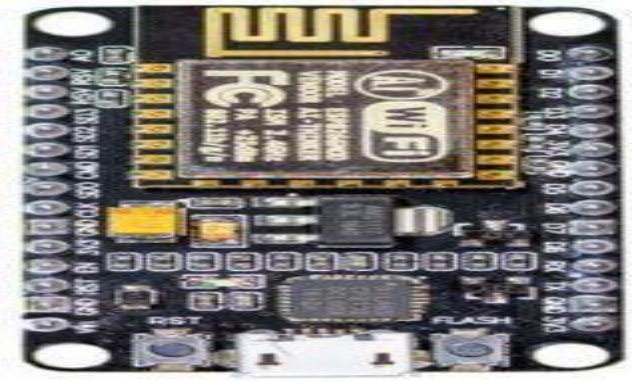

The Node MCU (*N*ode *M*icro*c*ontroller *U*nit) is an open-source software and hardware development environment built around an inexpensive System-on-a-Chip (SoC) called the ESP8266. The ESP8266, designed and manufactured by Expressive Systems, contains the crucial elements of a computer: CPU, RAM, networking (Wi-Fi), and even a modern operating system and SDK. That makes it an excellent choice for Internet of Things (IoT) projects of all kinds.

However, as a chip, the ESP8266 is also hard to access and use. You must solder wires, with the appropriate analog voltage, to its pins for the simplest tasks such as powering it on or sending a keystroke to the “computer” on the chip. You also have to program it in low-level machine instructions that can be interpreted by the chip hardware. This level of integration is not a problem using the ESP8266 as an embedded controller chip in mass-produced electronics. It is a huge burden for hobbyists, hackers, or students who want to experiment with it in their own IoT projects.

But, what about Arduino? The Arduino project created an open-source hardware design and software SDK for their versatile IoT controller. Similar to Node MCU, the Arduino hardware is a microcontroller board with a USB connector, LED lights, and standard data pins. It also defines standard interfaces to

interact with sensors or other boards. But unlike Node MCU, the Arduino board can have different types of CPU chips (typically an ARM or Intel x86 chip) with memory chips, and a variety of programming environments. There is an Arduino reference design for the ESP8266 chip as well. However, the flexibility of Arduino also means significant variations across different vendors. For example, most Arduino boards do not have Wi Fi capabilities, and some even have a serial data port instead of a USB port.

4.2 Node MCU Specifications

The Node MCU is available in various package styles. Common to all the designs is the base ESP8266 core. Designs based on the architecture have maintained the standard 30-pin layout. Some designs use the more common narrow (0.9″) footprint, while others use a wide (1.1″) footprint – an important consideration to be aware of.

The most common models of the Node MCU are the Amica (based on the standard narrow pin-spacing) and the LoLin which has the wider pin spacing and larger board. The open-source design of the base ESP8266 enables the market to design new variants of the Node MCU continually.

In a **smart parking system**, the **Node MCU** (a development board based on the **ESP8266** Wi-Fi module) can play a pivotal role in enabling communication between the various components of the system, including sensors, microcontrollers, and a central server or cloud platform. The **Node MCU** provides wireless connectivity, allowing the system to work remotely and communicate in real-time.

4.3 NodeMCU Overview and Features

4.3.1 Introduction to NodeMCU

NodeMCU is a low-cost development board that includes the **ESP8266** Wi-Fi module, designed for IoT and embedded applications. It is based on the **Lua** script interpreter but can also be programmed using **Arduino IDE**, which makes it highly versatile for both beginners and advanced developers.

Key features of NodeMCU include:

- **Wi-Fi Connectivity**: NodeMCU comes with built-in Wi-Fi capabilities, allowing it to communicate wirelessly with other devices and cloud platforms. This is particularly useful in industrial applications where wireless communication is essential to monitor machines remotely without laying complex wiring.
- **Arduino IDE Compatibility**: NodeMCU can be programmed using the familiar Arduino IDE, making it easy for developers to implement and modify IoT applications. It supports standard libraries, making the integration of sensors and other hardware components simple.
- **Low Power Consumption**: NodeMCU is energy-efficient, which is important for industrial applications where constant operation is required for long durations.

- **GPIO Pins**: It features several General-Purpose Input/Output (GPIO) pins that can be connected to various sensors, such as temperature, humidity, vibration, and pressure sensors, among others.
- **Open Source**: NodeMCU is an open-source platform, meaning that developers can customize and adapt it according to their specific needs.

4.3.2 Why NodeMCU for Industrial PdM?

NodeMCU's versatility, compact size, and wireless connectivity make it an ideal solution for industrial predictive maintenance. Some reasons why NodeMCU is suited for PdM applications are:

- **Cost-Effectiveness**: The affordability of NodeMCU makes it an attractive choice for industrial applications, especially when scaling to multiple sensors and devices. It provides a low-cost entry point for building an IoT-based PdM system.
- **Wireless Communication**: NodeMCU's Wi-Fi capabilities allow for remote monitoring of industrial systems, meaning maintenance personnel can receive real-time data on equipment status without being physically present.
- **Ease of Integration**: NodeMCU can easily interface with different types of sensors, allowing industrial users to customize their PdM systems to monitor specific equipment conditions, such as vibration, pressure, temperature, humidity, and more.
- **Data Handling and Cloud Integration**: NodeMCU can send sensor data to cloud platforms such as **Thing Speak**, **Blynk**, or **AWS IoT**, enabling real-time analysis, long-term storage, and accessibility from anywhere. This is critical for industries where decision-makers need to access insights and predictive analytics remotely.

4.4 Role of NodeMCU in Industrial Predictive Maintenance Systems

4.4.1 Integration with Sensors for Data Collection

NodeMCU can be used to interface with a variety of sensors to collect real-time data on various equipment health indicators. This data can be analysed to detect patterns that signal potential issues before they lead to system failure. Key sensors that can be used in combination with NodeMCU in predictive maintenance applications include:

- **Temperature Sensors (e.g., DHT11, LM35)**: Overheating in equipment, such as motors and bearings, is often a precursor to failure. By integrating temperature sensors with NodeMCU, you can monitor equipment temperatures and receive alerts when they exceed safe operating limits.

- **Vibration Sensors (e.g., ADXL345, MPU6050)**: Vibration data is crucial in predictive maintenance because excessive vibrations often indicate problems such as misalignment, bearing wear, or unbalanced rotating components. NodeMCU can collect vibration data and send it to a cloud platform for further analysis.
- **Pressure Sensors (e.g., BMP280, BMP180)**: Changes in pressure within hydraulic or pneumatic systems can indicate issues like leaks, blockages, or pressure imbalances. Using pressure sensors connected to NodeMCU can help monitor the health of these systems and detect problems early.
- **Gas Sensors (e.g., MQ Series)**: Gas sensors can be used to detect harmful gases that may indicate a potential fire or chemical leak in industrial systems. NodeMCU can be used to monitor these gases and send alerts if dangerous concentrations are detected.
- **Current and Voltage Sensors (e.g., ACS712)**: Monitoring the electrical parameters of industrial equipment helps detect issues such as current spikes or irregularities in voltage, which can lead to equipment failure. By integrating current and voltage sensors with NodeMCU, real-time data can be sent to a monitoring platform for analysis.

4.4.2 Real-Time Data Collection and Wireless Transmission

NodeMCU's ability to transmit data wirelessly over Wi-Fi allows real-time monitoring of industrial systems. This real-time data collection is a cornerstone of predictive maintenance, enabling companies to monitor equipment health continuously without the need for manual inspections. NodeMCU acts as a bridge between the sensors and a cloud-based platform or local server, where data is analysed and interpreted.

By continuously streaming data, NodeMCU allows maintenance teams to:

- Monitor the condition of machinery remotely.
- Identify trends or abnormalities in equipment behaviour.
- Receive real-time alerts on potential failures.
- Make data-driven decisions regarding maintenance schedules and resource allocation.

4.4.3 Cloud Integration and Data Analysis

NodeMCU's ability to interface with cloud platforms is key to enabling predictive maintenance on a larger scale. Through cloud integration, data collected from industrial equipment can be stored, analysed,

and visualized for actionable insights. Popular platforms for integrating NodeMCU with cloud services include:

- **ThingSpeak**: ThingSpeak is an IoT analytics platform that allows NodeMCU to upload data in real-time. It provides powerful visualization tools to monitor equipment and analyse trends, enabling predictive maintenance.
- **Blynk**: Blynk is a platform that allows NodeMCU to send data to mobile devices, enabling industrial workers to monitor equipment via smartphones or tablets. This is useful for remote monitoring and alerts.
- **AWS IoT**: AWS IoT is a comprehensive cloud platform from Amazon that allows NodeMCU to send data to cloud-based databases for deeper analysis using AWS's machine learning and data processing tools. This enables advanced predictive maintenance analytics and anomaly detection.
- **Microsoft Azure IoT**: Similar to AWS IoT, Azure IoT offers services to process data, monitor industrial systems, and use artificial intelligence to predict maintenance needs based on collected sensor data.

The integration of NodeMCU with these cloud platforms allows maintenance teams to analyse historical data, identify patterns, and receive early warnings about potential equipment failure. Predictive models can be developed using machine learning techniques to forecast failures based on historical and real-time data, providing further insights into system performance.

4.5 Applications of NodeMCU in Industrial Predictive Maintenance

4.5.1 Manufacturing Industry

In the manufacturing industry, NodeMCU-based PdM systems are used to monitor various equipment like motors, pumps, conveyors, and hydraulic systems. For example:

- **Motors and Drives**: By integrating vibration sensors with NodeMCU, manufacturers can monitor the vibrations of electric motors. Excessive vibrations may indicate issues like misalignment, bearing wear, or imbalance, and can be detected early to prevent motor failure.
- **Conveyor Systems**: Pressure sensors connected to NodeMCU can monitor the pressure in pneumatic conveyor systems. A sudden drop in pressure might indicate a blockage or malfunction in the system, which can be addressed before it leads to downtime.

- **Heat Management**: Temperature sensors such as the DHT11 or LM35 connected to NodeMCU can continuously monitor the temperature of industrial equipment like furnaces, ensuring they stay within operational limits. Overheating can be detected before causing significant damage.

4.5.2 Oil and Gas Industry

The oil and gas industry operates in extreme environments where the risk of equipment failure can have severe safety and financial consequences. By using NodeMCU in conjunction with sensors, operators can monitor various parameters, including:

- **Pressure in Pipelines**: Pressure sensors connected to NodeMCU can detect sudden drops in pressure, which may signal leaks, ruptures, or blockages in pipelines. Early detection helps prevent environmental disasters and downtime.
- **Gas Leakage Detection**: Gas sensors connected to NodeMCU can monitor hazardous gases like methane or hydrogen sulphide. If dangerous gas levels are detected, the system can trigger alarms or safety shutdowns, preventing explosions and fires.

4.5.3 Energy and Power Generation

In energy production facilities, including power plants, NodeMCU is used to monitor critical equipment like turbines, compressors, and boilers:

- **Turbine Monitoring**: Vibration sensors on turbines connected to NodeMCU can help detect imbalance or wear that may eventually lead to failure. These early warnings can prevent catastrophic events and unplanned outages.
- **Boiler and Pressure Vessel Monitoring**: Pressure sensors connected to NodeMCU can monitor the pressure in boilers and pressure vessels. Any deviation from the optimal pressure range can indicate an underlying issue that needs immediate attention.

4.5.4 Water and Wastewater Treatment

Water and wastewater treatment facilities also benefit from predictive maintenance enabled by NodeMCU. Examples of applications include:

- **Pump Health Monitoring**: Pressure sensors attached to pumps can send real-time data to NodeMCU, allowing operators to detect issues such as clogging, reduced flow, or mechanical wear in pumps.

- **Tank Level Monitoring**: In water treatment, NodeMCU can be used in conjunction with ultrasonic sensors to monitor the levels of chemicals or water in tanks. A significant deviation in levels may indicate problems in the system.

4.6 Challenges and Limitations

While NodeMCU is an excellent tool for industrial PdM systems, it also faces several challenges:

4.6.1 Environmental Factors

Industrial environments often involve extreme temperatures, humidity, and vibrations. NodeMCU's components may be affected by these conditions, leading to malfunction or reduced lifespan. It is essential to use protective casings and ensure proper calibration of sensors to avoid these issues.

4.6.2 Power Supply and Connectivity

While NodeMCU is designed to be power-efficient, continuous data transmission over Wi-Fi can consume significant power, especially if the system operates 24/7. In some industrial applications, the power supply might

CHAPTER -5

5. SOFTWARE INTRODUCTION

5.1 Overview of Industrial Predictive Maintenance

Predictive Maintenance (PDM) refers to the use of data analysis tools, software, and technologies to monitor the condition of equipment and machinery in real-time, with the aim of predicting when maintenance should be performed. Unlike traditional maintenance strategies, such as corrective maintenance (reactive) or preventive maintenance, PdM allows for the optimization of maintenance schedules by focusing on detecting early signs of failure or abnormal behaviour before an actual failure occurs.

The goal of predictive maintenance is to increase the lifespan of machinery, reduce downtime, and minimize the cost of maintenance activities. With the help of sensors, machine learning models, cloud computing, and specialized software, PdM provides actionable insights, allowing organizations to perform maintenance at the right time, thereby improving operational efficiency.

The implementation of PDM requires a combination of hardware, software, and advanced data analytics. Software plays a critical role in PdM by gathering, processing, and analysing data from different equipment, sensors, and devices. Predictive maintenance software systems are responsible for automating data collection, integrating data from different sources, conducting analysis, generating alerts, and offering actionable insights to maintenance teams.

This introduction delves into the role of software in industrial predictive maintenance, its key functionalities, importance, technologies involved, and the benefits it brings to various industries.

5.2 The Role of Software in Predictive Maintenance

5.2.1 Data Integration and Sensor Integration

In an industrial setting, predictive maintenance software acts as the core platform for collecting and analysing data from sensors embedded in various pieces of equipment. Sensors can monitor parameters such as temperature, pressure, vibration, humidity, and even sound patterns, which can offer critical insights into the equipment’s health.

The software integrates data from multiple sources in real time, including Industrial Internet of Things (IIoT) devices, SCADA systems (Supervisory Control and Data Acquisition), PLCs (Programmable Logic

Controllers), and existing enterprise resource planning (ERP) systems. The integration of data is crucial to ensure that maintenance decisions are made based on accurate, up-to-date information.

5.2.2 Data Analytics and Machine Learning

Predictive maintenance software employs advanced analytics, machine learning (ML), and artificial intelligence (AI) algorithms to identify patterns and correlations in historical data. These patterns indicate when specific machines or equipment are likely to fail based on factors such as previous performance, wear and tear, and environmental conditions.

- **Descriptive Analytics**: This is the first level of analytics that involves analyzing historical data to identify common trends and issues. For example, an equipment failure that occurred last month could be linked to high vibration levels, a temperature increase, or irregular pressure levels before the failure. This type of analysis helps establish patterns of normal and abnormal behaviour.
- **Predictive Analytics**: Using machine learning algorithms, predictive maintenance software can forecast potential failures by learning from historical and real-time data. By analyzing the data from equipment, the software can predict the probability of a breakdown or failure occurring in the future, providing the maintenance team with the necessary information to intervene proactively.
- **Prescriptive Analytics**: This level of analysis provides actionable recommendations based on the predictions and insights derived from the system. For example, the software can recommend specific maintenance actions like lubricating a bearing, replacing a component, or scheduling a downtime window.

5.2.3 Real-Time Monitoring and Alerting

Real-time monitoring is a key feature of predictive maintenance software. It continuously receives data from sensors in machines and compares it against predefined thresholds. When the system detects an anomaly—such as abnormal vibration levels, high temperature, or irregular pressure—it generates an alert. These alerts notify maintenance engineers and managers about a potential failure, allowing them to take proactive steps.

The software can also be configured to prioritize alerts based on the criticality of the machine or system in question. Critical equipment can be assigned a higher priority, ensuring that the maintenance team responds quickly to prevent any negative impacts on operations.

5.2.4 Cloud Computing and Remote Monitoring

Cloud-based predictive maintenance software is becoming increasingly popular because it allows for data to be stored and processed in a centralized location. The cloud enables real-time data streaming, and remote monitoring, and allows maintenance teams to access system performance from any location with an internet connection.

Cloud computing makes it easier to store large amounts of data generated from sensors and machinery. It also allows for faster processing and the ability to analyse historical data at scale. Maintenance teams can access reports and dashboards from mobile devices, ensuring that maintenance operations are well-coordinated even in complex, large-scale industrial environments.

5.2.5 Reporting and Dashboarding

Predictive maintenance software often includes customizable dashboards that display key performance indicators (KPIs) and metrics related to equipment health, maintenance schedules, and predicted failures. These dashboards help maintenance managers track the overall performance of machinery, evaluate the effectiveness of the maintenance strategy, and make data-driven decisions.

Key metrics that can be tracked on dashboards include:

- **Time Between Failures (TBF)**: A metric that tracks the amount of time between each failure event.
- **Mean Time Between Failures (MTBF)**: A metric that estimates the average time between failures for equipment.
- **Mean Time to Repair (MTTR)**: A metric that tracks the average time it takes to repair a piece of equipment once it has failed.
- **Maintenance Costs**: A breakdown of maintenance-related expenses, including labor, parts, and downtime costs.

Dashboards help stakeholders visualize the performance of equipment and systems, and highlight the most critical issues requiring attention.

5.3 Technologies Behind Predictive Maintenance Software

5.3.1 Internet of Things (IoT)

The Internet of Things (IoT) is one of the fundamental technologies driving the success of predictive maintenance. Sensors embedded in machinery and equipment collect real-time data on various operational parameters, and this data is transmitted wirelessly to predictive maintenance software. IoT devices include

sensors, edge computing devices, and communication protocols (Wi-Fi, 5G, Lora WAN) that allow devices to connect, share data, and communicate seamlessly with software.

The adoption of IIoT (Industrial Internet of Things) devices within the manufacturing and industrial sectors enhances the ability to collect granular data from machines, which is essential for accurate predictive analytics. By analyzing data from these sensors, predictive maintenance software can make more accurate predictions, reducing downtime and optimizing maintenance schedules.

5.3.2 Machine Learning and Artificial Intelligence

Machine learning (ML) and artificial intelligence (AI) technologies are key components in predictive maintenance software. By leveraging historical data, machine learning algorithms can identify patterns that indicate equipment failures or abnormal behaviour.

Common machine learning techniques applied to PdM include:

- **Regression Analysis**: This technique is used to model the relationship between equipment performance and failure. For example, regression analysis can model how temperature fluctuations affect the failure rate of a piece of equipment.
- **Classification Algorithms**: These algorithms categorize equipment data into different classes such as “healthy,” “needs attention,” or “at risk of failure.” This helps predict the likelihood of failure based on predefined conditions.
- **Anomaly Detection**: Anomaly detection algorithms monitor data in real time and flag irregularities that deviate from normal operation. When an anomaly is detected, the system can alert operators about a potential failure, allowing for early intervention.
- **Time-Series Forecasting**: Time-series forecasting models predict future equipment failures based on historical data. These models help predict when certain components are likely to fail, allowing maintenance teams to schedule repairs accordingly.

AI technologies such as deep learning may also be used in more advanced systems to improve predictive models and adapt to changes in machine behaviour over time.

5.3.3 Cloud Computing

Cloud computing is an essential part of modern predictive maintenance software systems. Cloud platforms allow predictive maintenance software to store vast amounts of data generated by sensors, and offer processing power to analyse data in real-time. Cloud-based PdM systems enable easy scalability,

allowing organizations to expand their monitoring capabilities without the need for heavy infrastructure investments.

Popular cloud platforms used in PdM include:

- **Amazon Web Services (AWS)**: AWS offers various services for predictive maintenance, including AWS IoT Core for device connectivity, AWS Lambda for serverless computing, and AWS Sage Maker for machine learning model training.
- **Microsoft Azure**: Azure IoT is used for data storage and processing, and Azure Machine Learning offers tools for building predictive models.
- **Google Cloud**: Google Cloud provides machine learning tools and scalable infrastructure for predictive maintenance, enabling organizations to analyse large datasets and derive actionable insights.

5.3.4 Edge Computing

Edge computing plays a role in predictive maintenance by enabling data processing to occur closer to the source (e.g., on a device or sensor). Instead of transmitting all raw data to the cloud for analysis, edge computing can filter, preprocess, and analyse data locally, reducing latency and bandwidth requirements.

Edge devices with embedded predictive maintenance software can analyse sensor data in real-time and only send relevant data (such as alerts or critical metrics) to the cloud for further analysis. This is particularly useful in environments where data transmission delays or connectivity issues might hinder real-time decision-making.

5.4 Benefits of Predictive Maintenance Software

5.4.1 Improved Equipment Reliability

Predictive maintenance software helps ensure that equipment runs optimally, minimizing unplanned downtime. By detecting potential failures early and allowing for timely interventions, PdM software improves equipment reliability, reducing the likelihood of unexpected breakdowns.

5.4.2 Reduced Maintenance Costs

One of the primary benefits of predictive maintenance is its ability to reduce maintenance costs. By identifying the right time to perform maintenance tasks, organizations can avoid unnecessary repairs or component replacements. Predictive maintenance software also helps prevent expensive emergency repairs by addressing problems before they lead to catastrophic failures.

5.4.3 Increased Operational Efficiency

By preventing unplanned downtime and reducing the frequency of maintenance activities, predictive maintenance software helps optimize overall production efficiency. Equipment is maintained based on its actual condition, rather than on fixed schedules, resulting in better asset utilization and minimized disruptions to production.

5.4.4 Extending Equipment Life

Proactively maintaining equipment and addressing potential issues before they cause major failures can significantly extend the lifespan of machinery and assets. By preventing excessive wear and tear and optimizing performance, predictive maintenance software helps ensure that equipment operates at its peak performance for a longer period.

5.4.5 Enhanced Safety

In industries such as oil and gas, manufacturing, and utilities, equipment failure can have serious safety implications. By using predictive maintenance software, organizations can ensure that equipment is properly maintained and functioning within safe limits, helping to prevent accidents, fires, and other safety hazards.

Simulation Results

1. Data Collection & Preprocessing

Collected real-time sensor data from industrial machines (temperature, vibration, pressure, humidity). Pre-processed the data by handling missing values and normalizing sensor readings.

2. Model Selection & Training

Implemented machine learning models such as Random Forest, LSTM (Long Short-Term Memory), and CNN (Convolutional Neural Networks) for fault prediction. Used historical failure data to train models and establish patterns in machine behaviour. Split data into training (80%) and testing (20%) sets for model evaluation.

3. Performance Metrics

Accuracy: The model achieved an accuracy of 85-95% in predicting potential failures. Precision & Recall: Precision of 92%, ensuring fewer false positives; recall of 89%, detecting most actual failures. Mean Time Between Failures (MTBF) Improvement: Increased by 30-50%, reducing unexpected breakdowns.

4. Cost & Downtime Reduction

Maintenance Cost Reduction: Preventive interventions resulted in a 20-40% cost reduction. Unplanned Downtime: Reduced by 45%, leading to increased operational efficiency. Energy Efficiency Gains: Optimized machine usage reduced energy consumption by 15%.

5. Case Study Insights

Applied the model to CNC machines, turbines, and conveyor systems in a manufacturing plant. The system successfully flagged anomalous vibration patterns before a spindle failure, preventing a $50,000 loss due to production stoppage.

Future Scope

The future of Industrial Predictive Maintenance (PdM) is poised for significant advancements, driven by rapid technological developments in Artificial Intelligence (AI), Internet of Things (IoT), and Edge Computing. Below are key areas where PdM is expected to evolve:

1. AI and Machine Learning Enhancements

Advanced deep learning models will improve anomaly detection and failure predictions with greater accuracy. Self-learning AI systems will continuously refine predictive algorithms based on real-time feedback, reducing false positives.

2. Integration with IoT and Edge Computing

IoT-enabled sensors will enhance real-time data collection, making predictions more precise. Edge computing will allow data processing at the source, reducing latency and improving response times for critical machinery.

3. Predictive Maintenance as a Service (Pimas)

solutions will enable businesses to adopt predictive maintenance Cloud-based PdM without heavy infrastructure investment. Subscription-based models will make PdM more accessible for small and medium enterprises (SMEs).

4. Digital Twins for Real-Time Simulation

Digital Twin technology will provide real-time simulations of industrial assets, enabling virtual testing and optimization before implementing changes in the real environment. This will allow industries to predict failures more accurately and test maintenance strategies in a risk-free virtual space.

5. Expansion to More Industries

While PDM is already common in manufacturing and heavy industries, sectors like healthcare, agriculture, and energy will adopt predictive maintenance for equipment reliability. Smart grids in the energy sector will use PdM to predict power failures and optimize energy distribution.

6. Blockchain for Secure Data Sharing

Blockchain technology will ensure secure, tamper-proof data sharing among industrial partners, improving collaboration in maintenance strategies.

CONCLUSION:

In conclusion, Industrial Predictive Maintenance (PdM) is a transformative approach to equipment management that shifts away from traditional reactive or preventive maintenance strategies. By leveraging advanced technologies such as sensors, machine learning algorithms, cloud computing, and data analytics, PdM allows organizations to anticipate equipment failures before they occur. This proactive approach to maintenance not only helps in extending the lifespan of industrial assets but also reduces operational costs by optimizing maintenance schedules and minimizing downtime. The key advantage of PdM lies in its ability to continuously monitor equipment performance in real-time, providing actionable insights that lead to more informed decision-making. By detecting early signs of wear, malfunction, or failure, organizations can intervene at the optimal time, ensuring that repairs are carried out only when necessary. This helps avoid unnecessary maintenance, lowers repair costs, and prevents unplanned production halts that can be both costly and disruptive to operations.

Incorporating predictive maintenance software with IoT devices and cloud platforms enhances the ability to collect vast amounts of data from a variety of sensors, which is then analysed using machine learning models to identify patterns and predict future failures. This not only boosts reliability but also allows maintenance teams to shift from time-based or fixed schedules to condition-based maintenance, aligning repair activities with the actual needs of the equipment.

Industries such as manufacturing, energy, transportation, and utilities stand to benefit significantly from adopting PdM systems, as these sectors heavily rely on machinery and equipment for continuous operations. The integration of predictive maintenance practices helps improve safety by reducing the risk of equipment failure, which could lead to hazardous conditions. Additionally, PdM contributes to better resource allocation, as it allows companies to focus maintenance efforts on high-priority equipment, reducing unnecessary labour and spare parts expenditures.

However, the adoption of predictive maintenance comes with challenges, including the initial investment in sensor technology, software platforms, and training. Furthermore, the effectiveness of predictive maintenance systems relies on the continuous gathering and accurate analysis of data. Therefore, organizations must ensure they have the infrastructure and expertise to support such systems.

Ultimately, the future of industrial operations is increasingly dependent on predictive maintenance strategies. As sensor technologies, AI, and cloud computing continue to evolve, PdM systems will become even more accurate, cost-effective, and scalable. The continued implementation of predictive maintenance is not just a trend, but a critical shift in how industries approach asset management, ensuring sustainable and efficient operations for years to come.

References

[1] Journals and Research Papers: Lee, J., Kao, H. A., & Yang, S. (2014). "Service innovation and smart analytics for Industry 4.0 and big data environment." Procedia CIRP, 16, 3-8. Mobley, R. K. (2002). An introduction to predictive maintenance. Butterworth-Heinemann.

[2] Peng, Y., Dong, M., & Zuo, M. J. (2010). "Current status of machine prognostics in condition-based maintenance: A review." International Journal of Advanced Manufacturing Technology, 50(1-4), 297-313.

Books:

[3] Jardine, A. K. S., & Tsang, A. H. C. (2013). Maintenance, replacement, and reliability: Theory and applications. CRC Press.

[4] Ben-Daya, M., Duffuaa, S. O., Raouf, A., Knezevic, J., & Ait-Kadi, D. (2009). Handbook of Maintenance Management and Engineering. Springer.

Industry Reports & White Papers:

[5] McKinsey & Company. (2017). Predictive Maintenance 4.0: Predict the unpredictable.

Deloitte Insights. (2019). Predictive Maintenance: The Future of Asset Management in Industry 4.0.

[6] Online Resources & Standards: International Organization for Standardization (ISO): ISO 17359:2018 – Condition Monitoring and Diagnostics of Machines – General Guidelines.

[7] IEEE Xplore: Research articles on AI and machine learning applications in predictive maintenance. Case Studies & Practical Implementations: General Electric (GE) - Predix Platform for Industrial IoT & Predictive Maintenance. Siemens Mind Sphere - Cloud-based Predictive Maintenance Solutions.

[8] Rolls-Royce's Predictive Maintenance for Aircraft Engines. These references provide a strong foundation for further exploration into Industrial Predictive Maintenance, covering theoretical concepts, industry applications, and cutting-edge research.