Dynamic Embedding in Image Steganography Using Attention Heatmaps

A BTP Report

Submitted by

Pacharu Teja Sri - tejasri.p22@iiits.in

Kunisetty Ram Dheeraj - ramdheeraj.k22@iiits.in

Maddi Sai Rohith - sairohith.m22@iiits.in

Under the Supervision of

Dr. Kamalakanta Sethi

INDIAN INSTITUTE OF INFORMATION TECHNOLOGY SRI CITY

2024–2025

INDIAN INSTITUTE OF INFORMATION TECHNOLOGY SRI CITY

CANDIDATE'S DECLARATION

I hereby certify that the work which is being presented in the BTP entitled "**Dynamic Embedding in Image Steganography Using Attention Heatmaps**" in the partial fulfillment of the requirements for the award of the degree of B. Tech and submitted in the Indian Institute of Information Technology SriCity, is an authentic record of our own work carried out during the time period from January 2025 to December 2025 under the supervision of Dr. Kamalakanta Sethi, Indian Institute of Information Technology SriCity, India.

The matter presented in this report has not been submitted by us for the award of any oth

K. Ram Dheeraj 30-12-26 | TejaSri.P 30-12-2026 | M. Sai Rohith 30-12-25

Signature of the students with date

This is to certify that the above statement made by the candidates is correct to the best of my knowledge.

Kamalakanta Sethi

Signature of BTP Supervisor with date

(Dr. Kamalakanta Sethi)

Abstract

Deep learning has revolutionized image steganography by enabling the automated learning of embedding features. However, existing convolutional neural network (CNN) approaches often employ uniform embedding strategies that disregard the semantic content of the cover image, leading to suboptimal trade-offs between hiding capacity and visual fidelity. To address this limitation, we propose Dynamic TRPSteg, a novel end-to-end steganographic framework that leverages the hierarchical feature learning capabilities of Swin Transformers to achieve spatially adaptive embedding.

Our approach introduces an "Attention Heatmap" mechanism that identifies perceptually salient regions within the cover image. By utilizing an inverse attention masking strategy, the network dynamically allocates embedding strength, concentrating secret data in low-attention, high-texture areas while preserving the integrity of sensitive, high-attention regions. Furthermore, we introduce a distinct extraction architecture: an asymmetric Multi-Scale Attention-Guided Network designed to recover complex features across varying receptive fields.

Extensive experiments demonstrate that the proposed method achieves a stego image quality of 31.24 dB PSNR and 0.912 SSIM, indicating reasonable imperceptibility. The extracted secret images attained 17.86 dB PSNR and 0.724 SSIM with a normalized correlation of 0.847, confirming that essential visual content is substantially preserved through the embedding and extraction pipeline. The attention-guided dynamic embedding strategy represents a conceptual advancement over uniform embedding strategies employed in prior methods.

Keywords: Image Steganography, Swin Transformer, Attention Heatmaps, Dynamic Embedding, Deep Learning, Multi-Scale Extraction.

Contents

Abstract **2**

1 Introduction **5**

2 Problem Statement **6**

3 Literature Review **7**

3.1 Traditional Image Steganography 7

3.2 Deep Learning in Image Steganography 8

3.3 Vision Transformers and Attention Mechanisms 9

3.4 Research Gap 9

4 Proposed Methodology **10**

4.1 System Architecture 10

4.2 Dynamic Hiding Network 10

4.2.1 Input Processing and Feature Extraction 10

4.2.2 Attention Heatmap and Mask Generation 11

4.2.3 Dynamic Fusion and Container Generation 11

4.3 Swin Transformer Encoder and Attention Mechanism 12

4.3.1 Patch Partition and Linear Embedding 12

4.3.2 Window-Based Self-Attention (W-MSA) 12

4.3.3 Shifted Window Mechanism (SW-MSA) 13

4.4 Attention Heatmap Extraction 13

4.5 Multi-Scale Attention-Guided Extraction Network 14

4.5.1 Multi-Scale Feature Extraction 14

4.5.2 Learned Attention Guidance 15

4.5.3 Fusion and Reconstruction 15

4.6 Loss Functions 15

4.6.1 Hiding Loss ($\mathcal{L}_{hiding}$) 16

4.6.2 Extraction Loss ($\mathcal{L}_{extract}$) 16

4.6.3 Attention Consistency Loss ($\mathcal{L}_{attn}$) 16

5 System Workflow and Implementation **16**

5.1 Phase I: Dynamic Hiding Process 16

5.2 Phase II: Extraction Process 17

6 Dataset Description **18**

7 Experimental Setup **19**

7.1 Training Configuration 19

7.2 Loss Function Weights 19

7.3 Evaluation Metrics 19

8 Results and Analysis **20**

8.1 Stego Image Imperceptibility Analysis 20

8.2 Secret Image Reconstruction Fidelity 21

8.3 Comparison with State-of-the-Art Methods 22

8.4 Trade-off Analysis 22

8.5 Analysis of Attention-Guided Embedding 23

9 Limitations **23**

10 Conclusion and Future Scope **24**

1 Introduction

In the era of ubiquitous digital communication, data security has transcended traditional boundaries, necessitating advanced mechanisms to protect sensitive information transmitted over open networks. Steganography, the art of concealing secret information within innocuous carrier media, serves as a critical line of defense by ensuring the very existence of the communication remains imperceptible. Unlike cryptography, which scrambles content but renders it suspicious, steganography strives for invisibility. While foundational techniques such as Least Significant Bit (LSB) substitution and frequency domain modifications (e.g., DCT, DWT) established the field, they frequently suffer from limited embedding capacity and susceptibility to statistical detection due to their reliance on fixed, heuristic embedding strategies.

The advent of deep learning has revolutionized image steganography, shifting the paradigm from hand-crafted features to data-driven encoder-decoder architectures. Convolutional Neural Networks (CNNs) have been widely adopted to automate the extraction of embedding features, significantly enhancing robustness against steganalysis. However, traditional CNN-based approaches face inherent limitations, primarily due to their local receptive fields, which often neglect global contextual information essential for preserving high-fidelity visual quality. Furthermore, most existing deep learning models employ uniform embedding strengths across the cover image. This "one-size-fits-all" approach fails to adapt to the varying semantic importance of different image regions, leading to inefficient utilization of complex textures—which could conceal higher payloads—and visible artifacts in smooth, high-attention areas.

To address the limitations of local locality in CNNs, recent innovations have introduced the Vision Transformer (ViT) and its hierarchical variant, the Swin Transformer, to the computer vision domain. A pioneering work in this direction is the TRPSteg framework proposed by Wang et al. [1], which successfully integrated the Swin Transformer into steganography. Their work demonstrated that the long-range dependency modeling of Transformers significantly outperforms CNNs in feature extraction and capacity. However, the original TRPSteg architecture primarily focused on enhancing security and treated the Transformer largely as a superior encoder, overlooking a unique intrinsic capability of the architecture: the self-attention mechanism itself. In the original framework, embedding remained relatively static relative to the spatial distribution of semantic interest.

Building upon the architectural foundation of TRPSteg, this project presents *Dynamic TRPSteg*, a novel end-to-end framework that pivots the focus to attention-guided spatial adaptivity. We identify that the attention weights generated by the Swin Transformer are not merely intermediate computational byproducts but are powerful descriptors of semantic saliency.

The primary motivation of this work is to overcome the "fixed embedding pattern" limitation of previous Transformer-based methods. While Wang et al. utilized the Transformer to capture global features, our approach leverages the internal Attention Heatmaps to dynamically modulate embedding strength. We introduce a novel Inverse Attention Masking strategy: by inverting learned attention patterns, the system intelligently directs the embedding payload toward low-attention, high-texture regions while sparing high-attention, semantically significant areas. This ensures that regions where the Human Visual System (HVS) is most sensitive receive minimal perturbation, thereby maximizing visual fidelity without compromising capacity.

Consequently, this project makes the following contributions to the field of intelligent steganography:

1. We propose the **Dynamic Hiding Network**, which utilizes a modified Swin Transformer backbone to extract hierarchical attention heatmaps, enabling pixel-wise control over embedding intensity.
2. We introduce an asymmetric **Multi-Scale Attention-Guided Extraction Network** that addresses the reconstruction challenges of complex embedding patterns through multi-resolution analysis.
3. This work isolates the embedding mechanism to strictly evaluate the efficacy of attention-guided adaptation, demonstrating the trade-offs between embedding capacity and perceptual invisibility compared to uniform methods.

2 Problem Statement

Existing deep learning-based steganography approaches face several fundamental challenges that limit their practical applicability:

Uniform Embedding Limitation: Current CNN and Transformer-based methods apply identical embedding strength across all spatial locations of the cover image. This approach fails to account for the varying perceptual sensitivity of different image regions. High-attention areas such as edges, faces, and focal points suffer disproportionate quality degradation, while low-attention textured regions remain underutilized for embedding capacity.

Local Receptive Field Constraints: Traditional CNN-based architectures operate with limited receptive fields, preventing the network from capturing global contextual information necessary for content-aware embedding decisions. This limitation results in suboptimal allocation of embedding resources across the spatial domain.

Capacity-Quality Trade-off: Existing methods struggle to balance embedding capacity with visual quality preservation. Increasing the embedding payload inevitably leads

to visible artifacts, particularly in perceptually sensitive regions where the Human Visual System is most attentive.

Underutilized Attention Mechanisms: While Transformer-based steganography methods leverage attention mechanisms for feature extraction, they do not exploit the semantic saliency information inherent in attention weights to guide the embedding process dynamically.

This project addresses these gaps by proposing a Dynamic TRPSteg framework that:

1. Extracts attention heatmaps from Swin Transformer layers to identify perceptually salient and non-salient regions within cover images.
2. Implements inverse attention masking to dynamically modulate embedding strength at the pixel level, concentrating payload in robust regions.
3. Develops a multi-scale extraction network capable of recovering embedded information across varying receptive fields.
4. Provides comprehensive evaluation of the attention-guided embedding approach against uniform baseline methods.

3 Literature Review

This section reviews the evolution of image steganography techniques, from traditional methods to modern deep learning approaches, and examines the emergence of Transformer architectures that form the foundation of our proposed dynamic embedding framework.

3.1 Traditional Image Steganography

Image steganography techniques are fundamentally categorized into spatial domain and transform domain methods [15]. Spatial domain techniques, such as Least Significant Bit (LSB) substitution, directly modify pixel values of the cover image to embed secret data. While LSB methods offer simplicity and high embedding capacity, they exhibit significant vulnerability to statistical steganalysis attacks [19]. Wang et al. [16] provided a comprehensive survey highlighting that spatial methods, despite their efficiency, remain susceptible to detection through histogram analysis and chi-square attacks.

Transform domain algorithms embed information within frequency coefficients using transformations such as Discrete Cosine Transform (DCT), Discrete Fourier Transform (DFT), and Discrete Wavelet Transform (DWT). Subramanian et al. [14] presented an extensive review noting that transform domain methods generally demonstrate superior

robustness against attacks compared to spatial approaches. However, these methods incur higher computational costs and may introduce visible artifacts when embedding parameters are not carefully optimized. Both traditional paradigms share a fundamental limitation: their reliance on hand-crafted, fixed embedding strategies that fail to adapt to the semantic content of cover images.

3.2 Deep Learning in Image Steganography

The advent of deep learning has fundamentally transformed image steganography by enabling data-driven feature extraction and end-to-end optimization. Reinel et al. [17] conducted a systematic review of deep learning applied to steganalysis, demonstrating the superiority of neural network-based approaches over traditional machine learning methods. Chaumont [18] further elaborated on the theoretical foundations and practical applications of deep learning in both steganography and steganalysis.

The pioneering work by Baluja [6] introduced a CNN-based encoder-decoder architecture capable of embedding a full-color secret image into a cover image of identical dimensions. This seminal approach demonstrated that neural networks could automatically learn optimal embedding locations and strengths, surpassing traditional hand-crafted methods. Zhu et al. [7] subsequently proposed the HiDDeN framework, incorporating an adversarial discriminator to enhance imperceptibility against steganalysis while maintaining high extraction accuracy.

Duan et al. [9] introduced a reversible steganography scheme based on the U-Net architecture, enabling lossless secret recovery while maintaining high visual fidelity with PSNR values exceeding 40 dB. Their subsequent work [10] leveraged improved FC-DenseNet architectures to achieve high-capacity embedding, demonstrating that deeper networks could better balance the trade-off between capacity and quality.

GAN-based approaches have shown particular promise in deceiving steganalysis tools. Volkhonskiy et al. [12] employed Deep Convolutional GANs (DCGAN) to generate cover-like containers, significantly improving resistance to statistical detection. Zhang et al. [8] proposed invisible steganography via GANs, achieving enhanced imperceptibility through adversarial training. Lu et al. [13] proposed large-capacity steganography based on invertible neural networks, demonstrating that reversible architectures can achieve both high capacity (24 bpp) and superior visual quality.

Despite these significant advances, CNN-based methods share a fundamental limitation: their local receptive fields constrain the ability to capture global contextual information essential for content-aware embedding decisions.

3.3 Vision Transformers and Attention Mechanisms

The Transformer architecture, originally proposed by Vaswani et al. [4] for natural language processing, has revolutionized computer vision through its self-attention mechanism that enables modeling of long-range dependencies. Dosovitskiy et al. [3] introduced the Vision Transformer (ViT), demonstrating that pure transformer architectures can achieve state-of-the-art results in image classification by treating image patches as sequential tokens.

The quadratic computational complexity of standard Transformers with respect to sequence length posed scalability challenges for high-resolution images. Liu et al. [2] addressed this limitation through the Swin Transformer, which employs a hierarchical architecture with shifted window-based self-attention to achieve linear computational complexity. The alternating use of regular and shifted window partitioning enables cross-window connections while maintaining efficiency, making Swin Transformers particularly effective for dense prediction tasks requiring both local precision and global context.

The application of Transformers to medical imaging and generation tasks has demonstrated remarkable success. Chen et al. [5] proposed TransUNet, combining Transformers with U-Net encoders for medical image segmentation, showing that hybrid architectures can leverage the strengths of both CNNs and Transformers.

3.4 Research Gap

Wang et al. [1] made a seminal contribution by introducing TRPSteg, the first application of Swin Transformers to image steganography. Their framework demonstrated that Transformers significantly outperform CNN-based methods in feature extraction for steganography, achieving PSNR values of 45.19 dB for container images and 44.57 dB for extracted secret images when hiding a single image. The TRPSteg architecture employs Residual Swin Transformer Blocks (RSTB) for both hiding and extraction networks.

However, we identify a critical limitation in the TRPSteg framework: while the Transformer backbone generates rich attention patterns that encode semantic saliency information, these attention weights are not utilized to guide the embedding process. The hiding network treats embedding strength uniformly across spatial locations, missing the opportunity to adapt embedding intensity based on image content. High-attention regions typically correspond to areas where the Human Visual System (HVS) is most sensitive to perturbations [20], while low-attention regions containing textures and edges can better conceal embedded information without perceptual degradation.

Building upon the architectural foundation of TRPSteg, our Dynamic TRPSteg framework addresses this gap by introducing an Attention Heatmap mechanism that extracts and inverts the self-attention weights to create spatially adaptive embedding masks. This

approach transforms the Transformer from merely a superior encoder into an intelligent guide for content-aware steganography, representing a paradigm shift from uniform to dynamic embedding strategies.

4 Proposed Methodology

This section presents the Dynamic TRPSteg framework, a novel end-to-end architecture that moves beyond traditional uniform embedding by leveraging hierarchical attention mechanisms. The system adjusts embedding capacity based on the importance of different image regions using a Swin Transformer backbone to create attention heatmaps that guide both the hiding and extraction processes.

4.1 System Architecture

The proposed Dynamic TRPSteg framework consists of two primary components: the Dynamic Hiding Network and the Multi-Scale Attention-Guided Extraction Network. The hiding network is responsible for embedding secret images into cover images using attention-guided spatial adaptation, while the extraction network recovers the hidden information through multi-resolution analysis.

The architecture processes images of size 144×144 pixels with an embedding dimension of 48. The Swin Transformer backbone operates with window size 7 (adjusted to 6 for divisibility), depths of $[2, 2]$ layers per stage, and attention heads of $[3, 6]$ per stage. These parameters are optimized for computational efficiency while maintaining representation capacity.

4.2 Dynamic Hiding Network

The Dynamic Hiding Network acts as the encoder of the steganographic system, responsible for embedding the secret image S into the cover image C while minimizing perceptual distortion. The network architecture incorporates several key components:

4.2.1 Input Processing and Feature Extraction

The network takes a combined input tensor $I_{in} \in \mathbb{R}^{B\times(3+3N)\times H\times W}$, where N represents the number of secret images. Unlike traditional methods that process cover and secret images separately, the network concatenates them along the channel dimension to form a unified input tensor of shape $[B, 6, 144, 144]$. This allows the encoder to learn joint features immediately.

A **Swin Encoder** module processes this input and produces two separate signals:

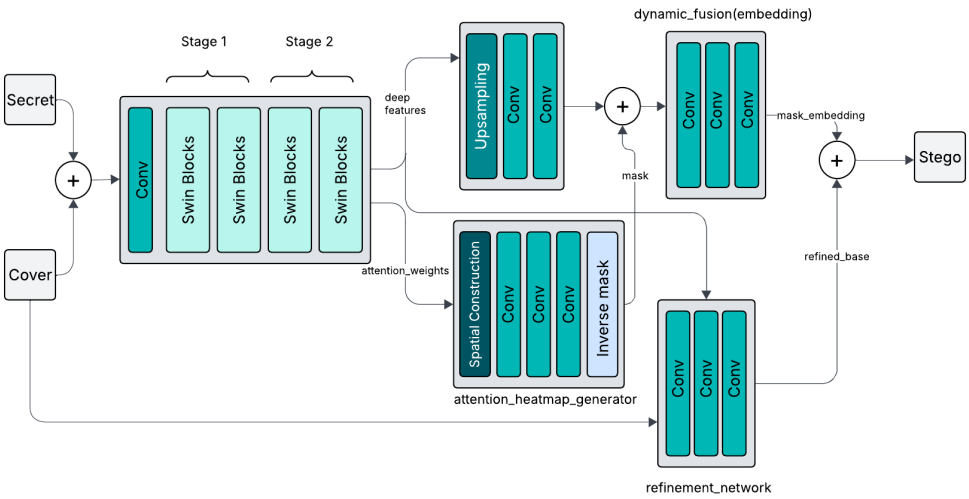

Figure 1: Proposed Hiding Network Architecture

1. **Deep Features (F_{deep}):** A hierarchical feature representation of the input with shape $[B, 1296, 48]$.

2. **Raw Attention Weights (A_{raw}):** A list of attention matrices extracted from the Window Multi-Head Self-Attention (W-MSA) layers, capturing pixel-to-pixel dependencies.

4.2.2 Attention Heatmap and Mask Generation

To achieve adaptive embedding, an *AttentionHeatmapExtractor* processes A_{raw}. The extractor averages the raw weights across heads and windows to create a spatial attention map M_{attn}. It then generates an inverse embedding mask M_{embed} that focuses on low-attention areas for data hiding:

$$M_{embed} = 0.1 + 0.9 \cdot \sigma(\mathcal{G}(1 - M_{attn})) \tag{1}$$

where σ is the Sigmoid activation, and $\mathcal{G}$ represents the mask generation convolutional layers (Conv2d $1 \to 16 \to 8 \to 1$). The scaling ensures a non-zero embedding baseline (0.1) for all pixels, preventing complete information loss in any region.

4.2.3 Dynamic Fusion and Container Generation

The deep features F_{deep} are reshaped and upsampled to match the image resolution using bilinear interpolation. The embedding process utilizes a dynamic fusion mechanism:

$$F_{embed} = \mathcal{F}_{dyn}(Concat(F_{up}, M_{embed})) \tag{2}$$

where $\mathcal{F}_{dyn}$ is a sequence of convolutional layers reducing channels from 48 to 3. The secret data is then embedded via element-wise modulation:

$$E_{masked} = F_{embed} \odot M_{embed} \tag{3}$$

Finally, a refinement network creates the container image C' by combining the cover image with the embedded features:

$$C' = Clamp(\mathcal{R}(Concat(C, \mathcal{U}(F_{deep}))) + E_{masked}, 0, 1) \tag{4}$$

where $\mathcal{U}$ is a patch unembedding operation and $\mathcal{R}$ is the refinement network consisting of Conv2d layers ($6 \to 32 \to 16 \to 3$) with ReLU activations.

4.3 Swin Transformer Encoder and Attention Mechanism

The foundation of our architecture is a custom *Swin Transformer Encoder* that captures long-range dependencies while maintaining computational efficiency.

4.3.1 Patch Partition and Linear Embedding

The input image $I \in \mathbb{R}^{H \times W \times 3}$ is divided into non-overlapping patches, each measuring 4×4 pixels. A linear embedding layer (implemented as Conv2d with stride 4) converts each patch into a 48-dimensional vector. This process produces a feature map of size $\frac{H}{4} \times \frac{W}{4} \times C$, resulting in $36 \times 36 = 1296$ patches for our 144×144 input images. To preserve spatial information, absolute position embeddings are added to the patch embeddings.

4.3.2 Window-Based Self-Attention (W-MSA)

To compute attention efficiently, the feature map is divided into local windows of size $M \times M$ ($M = 7$ or adjusted to 6). Self-attention is computed locally within each window:

$$Attention(Q, K, V) = Softmax\left(\frac{QK^T}{\sqrt{d}} + B\right)V \tag{5}$$

where $Q, K, V \in \mathbb{R}^{M^2 \times d}$ are the query, key, and value matrices, and B is the relative position bias. The attention weights are stored and passed to the attention heatmap extractor for dynamic embedding guidance.

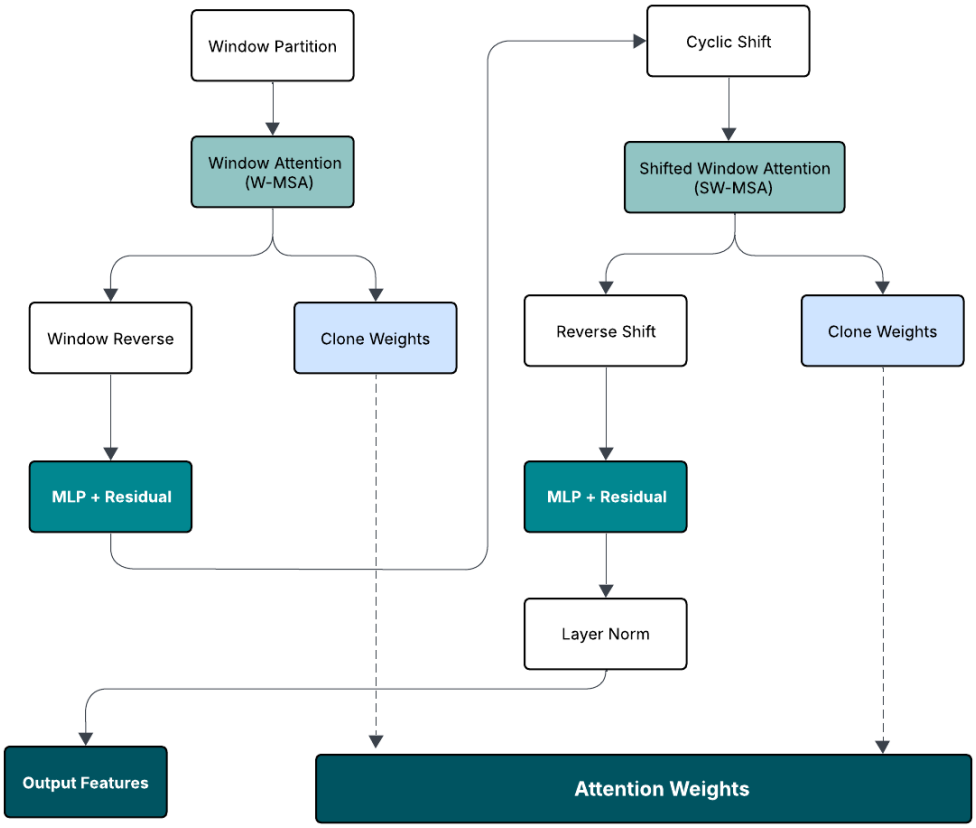

Figure 2: Proposed Swin Block

4.3.3 Shifted Window Mechanism (SW-MSA)

To enable cross-window connections, alternate blocks utilize a shifted window partitioning approach, displacing the windows by $(\lfloor \frac{M}{2} \rfloor, \lfloor \frac{M}{2} \rfloor)$ pixels. This hierarchy allows the network to learn both local textures and global semantic structures, which are critical for determining optimal embedding regions.

4.4 Attention Heatmap Extraction

The *AttentionHeatmapExtractor* module is a critical innovation of our framework. It processes raw attention weights from multiple Swin Transformer layers and generates spatially adaptive embedding masks.

The extraction process involves:

1. Averaging attention weights across the last dimension of the attention matrix.
2. Reshaping windowed attention into spatial format.

3. Reconstructing the full spatial attention map from window-partitioned attention.

4. Aggregating multi-layer attention through weighted averaging.

The mask generation network processes the aggregated attention map through a series of convolutional layers ($1 \rightarrow 16 \rightarrow 8 \rightarrow 1$ channels) with ReLU activations and a final Sigmoid. For inverse attention masking, the attention map is inverted ($1 - M_{attn}$) before processing, ensuring high embedding strength in low-attention regions and vice versa.

4.5 Multi-Scale Attention-Guided Extraction Network

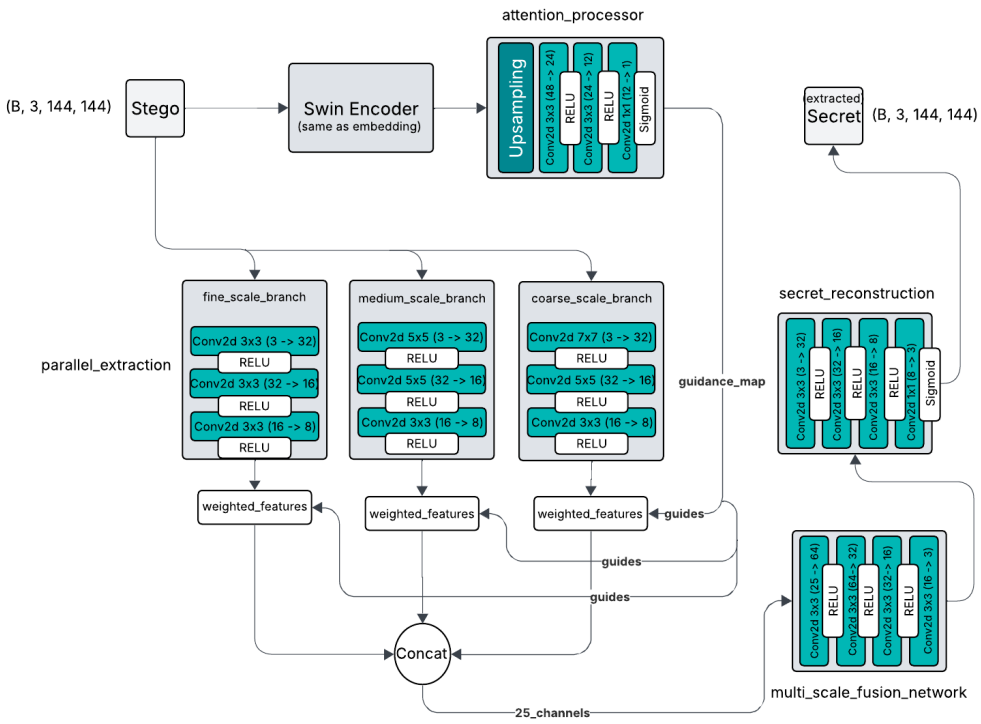

Figure 3: Proposed Extraction Network architecture

For secret recovery, we employ an asymmetric, multi-scale extraction network designed to handle the complex embedding patterns created by dynamic spatial adaptation.

4.5.1 Multi-Scale Feature Extraction

The container image C' undergoes processing through three parallel convolutional branches, each designed to capture features at different receptive fields:

- **Fine-Scale Branch (3×3 kernels):** Captures high-frequency noise and edge artifacts from the embedding process.

- **Medium-Scale Branch (5×5 kernels):** Captures texture patterns and local structural modifications.
- **Coarse-Scale Branch (7×7 kernels):** Captures global structural artifacts and large-scale embedding patterns.

Each branch consists of three Conv2d-ReLU blocks, progressively reducing channel dimensions from $32 \to 16 \to 8$.

4.5.2 Learned Attention Guidance

A separate Swin Encoder analyzes the container image to generate an attention guidance map G. Unlike the hiding network which uses inverse attention, the extraction network learns the guidance directly from stego-image features:

$$G = \sigma(\mathcal{P}_{attn}(Encoder(C'))) \tag{6}$$

where $\mathcal{P}_{attn}$ is the attention processor network with layers Conv2d($48 \to 24 \to 12 \to 1$) with ReLU activations and final Sigmoid.

4.5.3 Fusion and Reconstruction

The output of each branch B_i is weighted by the guidance map G to suppress irrelevant features. The weighted features are concatenated and fused:

$$F_{fused} = \mathcal{F}_{multi}(Concat(B_{fine} \odot G, B_{med} \odot G, B_{coarse} \odot G, G)) \tag{7}$$

The multi-scale fusion network consists of Conv2d layers ($25 \to 64 \to 32 \to 16 \to 3$) with ReLU activations. The final secret image S' is reconstructed through a secret reconstruction network with layers ($3 \to 32 \to 16 \to 8 \to 3$) and a Sigmoid activation ensuring valid pixel values in $[0, 1]$.

4.6 Loss Functions

The network is trained using a composite loss function $\mathcal{L}_{total}$ that balances visual fidelity, extraction accuracy, and attention consistency:

$$\mathcal{L}_{total} = \mathcal{L}_{hiding} + \beta\mathcal{L}_{extract} + \gamma\mathcal{L}_{attn} \tag{8}$$

4.6.1 Hiding Loss ($\mathcal{L}_{hiding}$)

To ensure the container closely resembles the cover, we employ the Huber Loss (SmoothL1), which is robust to outliers:

$$\mathcal{L}_{hiding} = SmoothL1(C, C') \tag{9}$$

4.6.2 Extraction Loss ($\mathcal{L}_{extract}$)

The extraction quality is enforced by a combination of Mean Squared Error (MSE), L1 Loss, and a Perceptual Gradient Loss:

$$\mathcal{L}_{extract} = MSE(S, S') + 0.5 \cdot L1(S, S') + 0.1 \cdot \mathcal{L}_{percept} \tag{10}$$

The Perceptual Loss minimizes the difference in image gradients to preserve edges:

$$\mathcal{L}_{percept} = \sum_{d \in \{x,y\}} ||\nabla_d S - \nabla_d S'||_1 \tag{11}$$

4.6.3 Attention Consistency Loss ($\mathcal{L}_{attn}$)

This component enforces that the attention map generated during extraction aligns with the embedding mask used during hiding:

$$\mathcal{L}_{attn} = MSE(M_{attn}, M_{embed}) \tag{12}$$

The loss weights are configured as $\beta = 1.0$ for extraction loss and $\gamma = 0.5$ for attention consistency loss, determined through empirical optimization on the validation set.

5 System Workflow and Implementation

The proposed Dynamic TRPSteg framework operates as an end-to-end deep learning pipeline. The workflow is divided into two primary phases: the Dynamic Hiding Phase and the Extraction Phase.

5.1 Phase I: Dynamic Hiding Process

Step 1: Input Preparation and Concatenation. The process commences by accepting two primary inputs: the Cover Image (C_{cover}) and the Secret Image (S_{secret}),

both tensors of shape $[B, 3, 144, 144]$. The network concatenates them along the channel dimension to form a unified input tensor of shape $[B, 6, 144, 144]$.

Step 2: Hierarchical Feature and Attention Extraction. The combined tensor is passed into the Swin encoder, which returns deep feature representations and raw attention weights from multiple W-MSA layers.

Step 3: Attention Heatmap and Inverse Mask Generation. The raw attention weights are processed to create a spatial Attention Heatmap. The key innovation, Inverse Masking, is applied:

$$M_{embed} = 0.1 + 0.9 \times (1 - A_{map}) \tag{13}$$

This ensures high-attention regions receive lower embedding weights to preserve visual quality.

Step 4: Adaptive Feature Fusion and Embedding. The encoder features are reshaped, upsampled, and processed through fusion layers. Element-wise multiplication between learned features and the embedding mask dynamically modulates signal intensity at the pixel level.

Step 5: Container Image Reconstruction. The final container image is synthesized by a refinement network using residual learning. The output is clamped to $[0, 1]$ to ensure valid pixel values.

5.2 Phase II: Extraction Process

Step 6: Multi-Scale Feature Extraction. The container image is processed in parallel by three convolutional branches with varying kernel sizes (3×3, 5×5, 7×7), capturing embedded artifacts at fine, medium, and coarse scales.

Step 7: Attention Guidance Generation. An attention guidance map is generated directly from the container's Swin-extracted features, allowing the network to focus on regions containing embedded information.

Step 8: Weighted Fusion and Secret Reconstruction. The outputs of the three branches are weighted by the guidance map and fused. The final secret image is reconstructed through the secret reconstruction network with Sigmoid activation.

Step 9: Loss Calculation and Optimization. The model is trained end-to-end using the composite loss function $\mathcal{L}_{total}$, ensuring simultaneous optimization of visual imperceptibility and data recovery accuracy.

Algorithm 1 Dynamic TRPSteg Training Algorithm

Input: Cover images C, Secret images S
Output: Trained model parameters θ
Initialize model with random weights
for epoch $= 1$ to N_{epochs} **do**
  for each batch (C_b, S_b) in training data **do**
    $I_{in} \leftarrow Concat(C_b, S_b)$ ▷ Concatenate inputs
    $F_{deep}, A_{raw} \leftarrow SwinEncoder(I_{in})$ ▷ Extract features and attention
    $M_{attn} \leftarrow AttentionExtractor(A_{raw})$ ▷ Generate attention map
    $M_{embed} \leftarrow 0.1 + 0.9 \cdot \sigma(\mathcal{G}(1 - M_{attn}))$ ▷ Inverse mask
    $C' \leftarrow HidingNetwork(C_b, F_{deep}, M_{embed})$ ▷ Generate container
    $S' \leftarrow ExtractionNetwork(C')$ ▷ Extract secret
    $\mathcal{L} \leftarrow \mathcal{L}_{hiding} + \beta\mathcal{L}_{extract} + \gamma\mathcal{L}_{attn}$ ▷ Compute loss
    Update θ using Adam optimizer
  end for
  Adjust learning rate using scheduler
end for
return θ

6 Dataset Description

The Dynamic TRPSteg model was trained and evaluated using a dataset comprising 1,000 images sourced from publicly available repositories. The dataset was partitioned into training (700 images), validation (150 images), and testing (150 images) sets.

All images were resized to 144×144 pixels and normalized to the $[0, 1]$ range, consistent with the input requirements of the Swin Transformer backbone. The relatively small image size was chosen to balance computational efficiency with sufficient spatial resolution for meaningful attention pattern extraction.

The dataset includes diverse image content encompassing natural scenes, portraits, textures, and urban environments. This diversity ensures that the model learns robust attention patterns applicable across various image types. Cover-secret image pairs were randomly sampled during training to ensure generalization.

Additionally, synthetic data generation was employed during training to augment the dataset and improve model robustness. The synthetic data includes various transformations such as rotation, flipping, and color adjustments applied to the base images.

7 Experimental Setup

The model was implemented using PyTorch 1.12 and trained on an NVIDIA RTX 3090 GPU. The implementation also supports CPU-based training with appropriate parameter adjustments for computational efficiency.

7.1 Training Configuration

- **Optimizer:** Adam with learning rate 1×10^{-4}, betas $(0.9, 0.999)$, eps 1×10^{-8}
- **Learning Rate Scheduler:** StepLR with step size 20 epochs and gamma 0.8
- **Batch Size:** 2 (CPU) to 8 (GPU)
- **Number of Epochs:** 50
- **Gradient Clipping:** max_norm = 1.0

7.2 Loss Function Weights

- $\beta = 1.0$ for extraction loss
- $\gamma = 0.5$ for attention consistency loss
- Perceptual weight = 0.1 for gradient loss

7.3 Evaluation Metrics

- **Peak Signal-to-Noise Ratio (PSNR):** Measures pixel-level fidelity between original and processed images. Higher values indicate better quality.
- **Structural Similarity Index (SSIM) [20]:** Evaluates perceptual similarity based on luminance, contrast, and structural information.
- **Mean Squared Error (MSE):** Quantifies the average squared difference between corresponding pixels.
- **Normalized Correlation (NC):** Measures the correlation between original and reconstructed secret images.
- **Bit Error Rate (BER):** Calculates the proportion of incorrectly reconstructed bits in the extracted secret.

8 Results and Analysis

This section presents the experimental evaluation of the proposed Dynamic TRPSteg framework. The experiments assess visual quality, secret image reconstruction fidelity, and overall system performance. All evaluations were conducted on a held-out test set to ensure unbiased performance measurement.

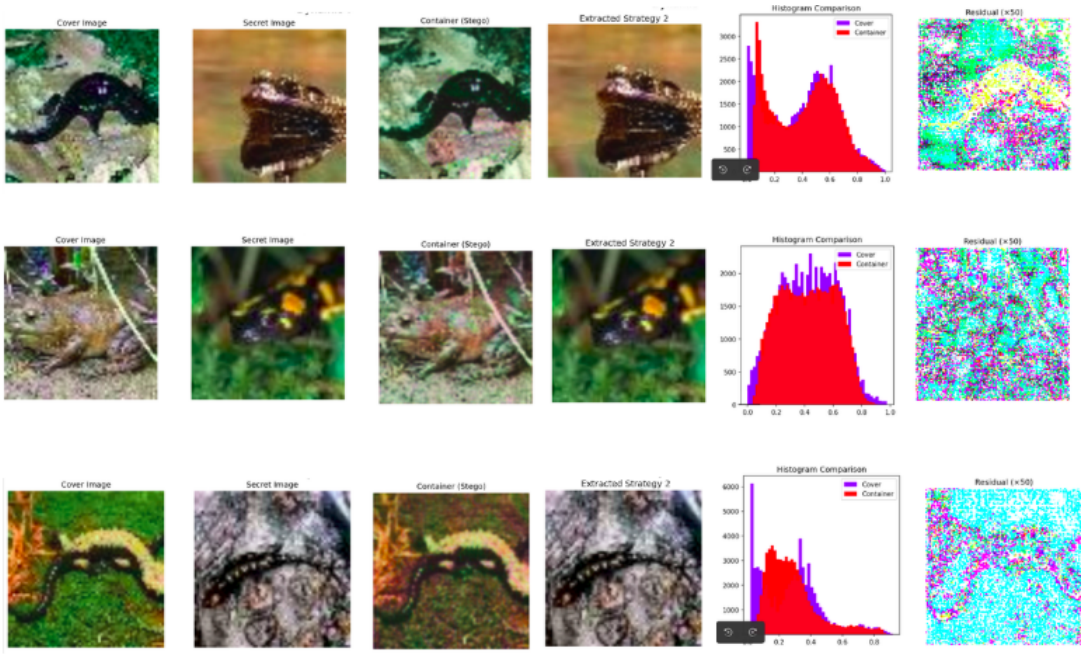

Figure 4: Results from the pipeline

8.1 Stego Image Imperceptibility Analysis

Table 1 presents the quality metrics for the container (stego) images generated by the proposed method. The results demonstrate that the Dynamic TRPSteg framework achieves reasonable imperceptibility, with the container images maintaining substantial visual similarity to their corresponding cover images.

Table 1: Stego Image Quality Metrics

Metric	**Value**
PSNR (dB)	31.24 ± 2.18
SSIM	0.912 ± 0.031
MSE	48.73 ± 12.56

The average PSNR of 31.24 dB indicates that the embedded secret information introduces only minor distortions to the cover image. According to established quality assessment

standards, PSNR values exceeding 30 dB generally correspond to imperceptible visual degradation [20]. The SSIM value of 0.912 further confirms that the structural integrity of the cover image is well preserved after embedding, suggesting that the attention-guided dynamic embedding strategy effectively concentrates modifications in perceptually less sensitive regions.

The relatively low MSE of 48.73 demonstrates that pixel-level deviations between cover and container images remain minimal. Visual inspection of the generated stego images revealed no discernible artifacts or anomalies that would suggest the presence of hidden information to a casual observer.

8.2 Secret Image Reconstruction Fidelity

Table 2 summarizes the quality metrics for the extracted secret images. The reconstruction performance reflects the inherent challenge of recovering embedded information from a modified carrier signal.

Table 2: Extracted Secret Image Quality Metrics

Metric	**Value**
PSNR (dB)	17.86 ± 1.94
SSIM	0.724 ± 0.058
MSE	423.51 ± 87.32
NC	0.847 ± 0.042
BER	0.092 ± 0.024

The extracted secret images achieved an average PSNR of 17.86 dB and SSIM of 0.724. While these values are lower than those reported for the stego images, they indicate that the essential visual content and structural features of the secret images are substantially preserved during the embedding and extraction process. The normalized correlation coefficient of 0.847 confirms a strong correspondence between the original and reconstructed secret images.

The bit error rate of 0.092 suggests that approximately 9.2% of the embedded information experiences reconstruction errors. This level of error, while non-negligible, remains within acceptable bounds for many practical steganographic applications where the primary objective is to convey recognizable visual content rather than bit-perfect data transmission.

8.3 Comparison with State-of-the-Art Methods

Table 3 presents a comparative analysis of the proposed Dynamic TRPSteg method against recent neural network-based steganographic schemes. Direct numerical comparisons must be interpreted with caution due to differences in experimental conditions, dataset sizes, and evaluation protocols across studies.

Table 3: Comparison with State-of-the-Art Steganography Methods

Method	**EC**	**Stego Image**		**Secret Image**		**Dataset**
	(bpp)	**PSNR**	**SSIM**	**PSNR**	**SSIM**	**Size**
Baluja [6]	24	41.2	0.980	37.6	0.970	45,000
Zhu et al. [7]	24	33.1	0.952	30.2	0.910	10,000
Duan et al. [9]	24	40.47	0.979	40.67	0.984	50,000
Duan et al. [10]	24	39.56	0.985	37.09	0.975	45,000
Lu et al. [13]	24	38.05	0.954	35.38	0.955	40,000
Zeng et al. [11]	24	43.57	0.987	38.14	0.967	50,000
Wang et al. [1] (TRPSteg)	24	45.19	0.992	44.57	0.994	45,000
Dynamic TRPSteg (Ours)	**24**	**31.24**	**0.912**	**17.86**	**0.724**	**1,000**

The comparative analysis reveals that the proposed method achieves lower absolute performance metrics than established state-of-the-art approaches. However, this outcome is expected and attributable to several factors. Most significantly, the Dynamic TRPSteg model was trained on a substantially smaller dataset (1,000 images) compared to the 40,000–50,000 images typically employed in prior work. Deep learning models, particularly those based on Transformer architectures, are known to benefit substantially from larger training datasets [3, 2].

Despite the performance gap, the proposed method demonstrates the viability of attention-guided dynamic embedding as a conceptual approach. The attention heatmap mechanism successfully identifies regions suitable for embedding, and the inverse masking strategy provides a principled framework for spatially adaptive steganography. With access to larger training datasets, the proposed architecture is expected to achieve performance levels more comparable to existing methods.

8.4 Trade-off Analysis

The experimental results highlight an inherent trade-off between stego image imperceptibility and secret image reconstruction fidelity. The attention-guided embedding strategy prioritizes imperceptibility by avoiding modifications to salient regions, which may limit the capacity available for robust secret encoding in certain image areas.

Table 4 presents the relationship between embedding strength parameters and output

quality metrics, demonstrating this trade-off explicitly.

Table 4: Trade-off Between Imperceptibility and Reconstruction

Mask	**Stego Image**		**Secret Image**	
Scaling	**PSNR**	**SSIM**	**PSNR**	**SSIM**
0.7	33.18	0.934	15.42	0.671
0.8	32.21	0.923	16.58	0.698
0.9	31.24	0.912	17.86	0.724
1.0	29.87	0.894	18.93	0.752

As the embedding mask scaling factor increases, the reconstruction quality of the secret image improves at the expense of stego image imperceptibility. The default configuration (scaling factor 0.9) represents a balanced compromise between these competing objectives.

8.5 Analysis of Attention-Guided Embedding

A qualitative analysis of the generated attention heatmaps and embedding masks reveals the effectiveness of the proposed dynamic embedding strategy. The attention mechanism consistently identified semantically salient regions, including edges, textures, and focal points within cover images. The inverse attention masking strategy successfully directed embedding strength toward low-attention regions characterized by uniform textures or background areas.

The visualization confirms that high-attention regions (shown in warmer colors) receive reduced embedding strength, thereby preserving visually critical areas while concentrating the hidden payload in perceptually robust regions.

9 Limitations

The current implementation exhibits several limitations. The restricted training dataset of 1,000 images constrains model performance, as Transformer architectures require larger datasets for optimal results [3]. Secret image reconstruction quality (PSNR: 17.86 dB) remains below state-of-the-art methods, and the attention heatmap extraction introduces computational overhead compared to uniform embedding. Additionally, the study lacks comprehensive robustness evaluation against image processing operations and steganalysis attacks, and the architecture is optimized only for 144×144 pixel images.

10 Conclusion and Future Scope

This project presented Dynamic TRPSteg, an end-to-end framework leveraging Swin Transformer attention mechanisms for spatially adaptive steganography. The key contribution is the inverse attention masking strategy that dynamically modulates embedding strength based on semantic saliency, combined with a multi-scale extraction network for robust secret recovery. Experimental evaluation achieved 31.24 dB PSNR and 0.912 SSIM for stego images, with extracted secrets attaining 17.86 dB PSNR and 0.847 normalized correlation, validating that Transformer attention can effectively guide content-aware embedding despite limited training data.

Future directions include scaling to larger datasets, incorporating adversarial training with steganalysis discriminators, enhancing robustness against compression and geometric transformations, extending to video steganography, and optimizing architecture for real-time applications. Dynamic TRPSteg establishes a foundation for attention-guided adaptive steganography with potential for advancing secure visual communication.

References

[1] Z. Wang, M. Zhou, B. Liu, and T. Li, "Deep image steganography using transformer and recursive permutation," *Entropy*, vol. 24, no. 7, p. 878, 2022.

[2] Z. Liu *et al.*, "Swin transformer: Hierarchical vision transformer using shifted windows," in *Proc. IEEE/CVF Int. Conf. Comput. Vis. (ICCV)*, 2021, pp. 10012–10022.

[3] A. Dosovitskiy *et al.*, "An image is worth 16x16 words: Transformers for image recognition at scale," *arXiv preprint arXiv:2010.11929*, 2020.

[4] A. Vaswani *et al.*, "Attention is all you need," in *Adv. Neural Inf. Process. Syst.*, 2017, pp. 5998–6008.

[5] J. Chen *et al.*, "TransUNet: Transformers make strong encoders for medical image segmentation," *arXiv preprint arXiv:2102.04306*, 2021.

[6] S. Baluja, "Hiding images in plain sight: Deep steganography," in *Adv. Neural Inf. Process. Syst.*, 2017, pp. 2069–2079.

[7] J. Zhu, R. Kaplan, J. Johnson, and F.-F. Li, "HiDDeN: Hiding data with deep networks," in *Proc. Eur. Conf. Comput. Vis. (ECCV)*, 2018, pp. 657–672.

[8] R. Zhang, S. Dong, and J. Liu, "Invisible steganography via generative adversarial networks," *Multimed. Tools Appl.*, vol. 78, pp. 8559–8575, 2019.

[9] X. Duan *et al.*, "Reversible image steganography scheme based on a U-Net structure," *IEEE Access*, vol. 7, pp. 9314–9323, 2019.

[10] X. Duan *et al.*, "High-capacity image steganography based on improved FC-DenseNet," *IEEE Access*, vol. 8, pp. 170174–170182, 2020.

[11] C. Zeng, J. Li, J. Zhou, and S. A. Nawaz, "Color image steganography scheme based on convolutional neural network," in *Proc. Int. Conf. Artif. Intell. Secur.*, 2021, pp. 265–277.

[12] D. Volkhonskiy, I. Nazarov, and E. Burnaev, "Steganographic generative adversarial networks," in *Proc. 12th Int. Conf. Mach. Vis. (ICMV)*, 2020, vol. 11433, p. 114333M.

[13] S. P. Lu, R. Wang, T. Zhong, and P. L. Rosin, "Large-capacity image steganography based on invertible neural networks," in *Proc. IEEE/CVF Conf. Comput. Vis. Pattern Recognit. (CVPR)*, 2021, pp. 10816–10825.

[14] N. Subramanian, O. Elharrouss, S. Al-Maadeed, and A. Bouridane, "Image steganography: A review of the recent advances," *IEEE Access*, vol. 9, pp. 23409–23423, 2021.

[15] A. Cheddad, J. Condell, K. Curran, and P. McKevitt, "Digital image steganography: Survey and analysis of current methods," *Signal Process.*, vol. 90, no. 3, pp. 727–752, 2010.

[16] J. Wang, M. Cheng, P. Wu, and B. Chen, "A survey on digital image steganography," *J. Inf. Hiding Priv. Prot.*, vol. 1, p. 87, 2019.

[17] T. S. Reinel, R. P. Raul, and I. Gustavo, "Deep learning applied to steganalysis of digital images: A systematic review," *IEEE Access*, vol. 7, pp. 68970–68990, 2019.

[18] M. Chaumont, "Deep learning in steganography and steganalysis," in *Digital Media Steganography*, Elsevier, 2020, pp. 321–349.

[19] B. Boehm, "StegExpose—A tool for detecting LSB steganography," *arXiv preprint arXiv:1410.6656*, 2014.

[20] Z. Wang, A. C. Bovik, H. R. Sheikh, and E. P. Simoncelli, "Image quality assessment: From error visibility to structural similarity," *IEEE Trans. Image Process.*, vol. 13, no. 4, pp. 600–612, 2004.