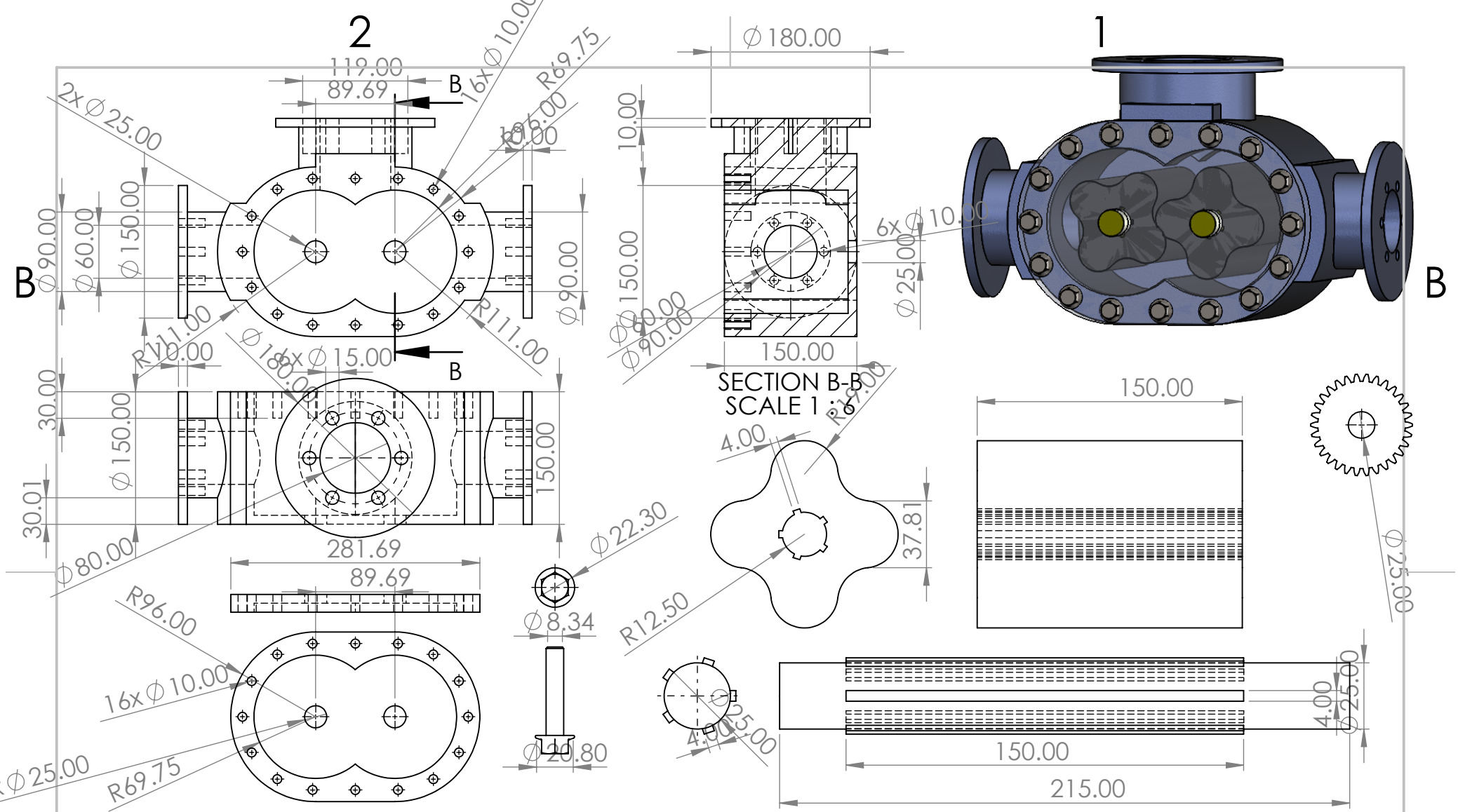

PART	ITEM	MATERIAL	QUANTITY
1	Housing	C.I.	1
2	Back Cover	C.I.	1
3	Impeller	Matte Steel	2
4	Shaft	Cast Carbon Steel	2
5	Gear	Stainless Steel	2
6	Hex flange	Aluminium	16