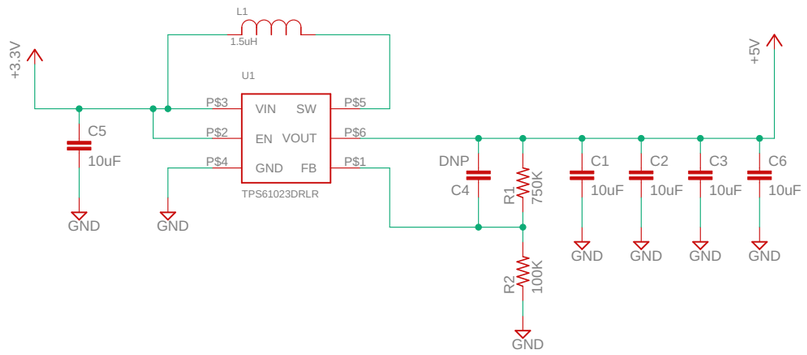

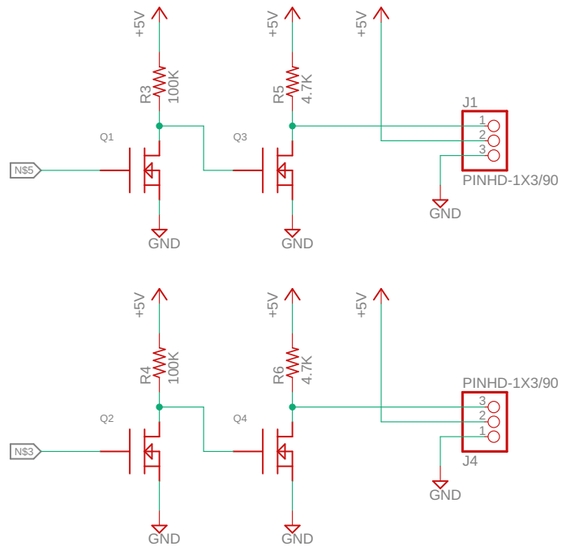

POWER

CONNECTORS/PADS

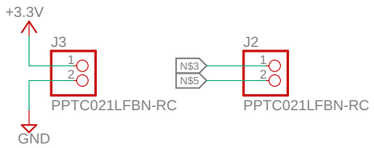

TITLE: BB-BattShield-TEST	
Document Number:	REV:
Date: 05/08/2020 19:17	Sheet: 1/1