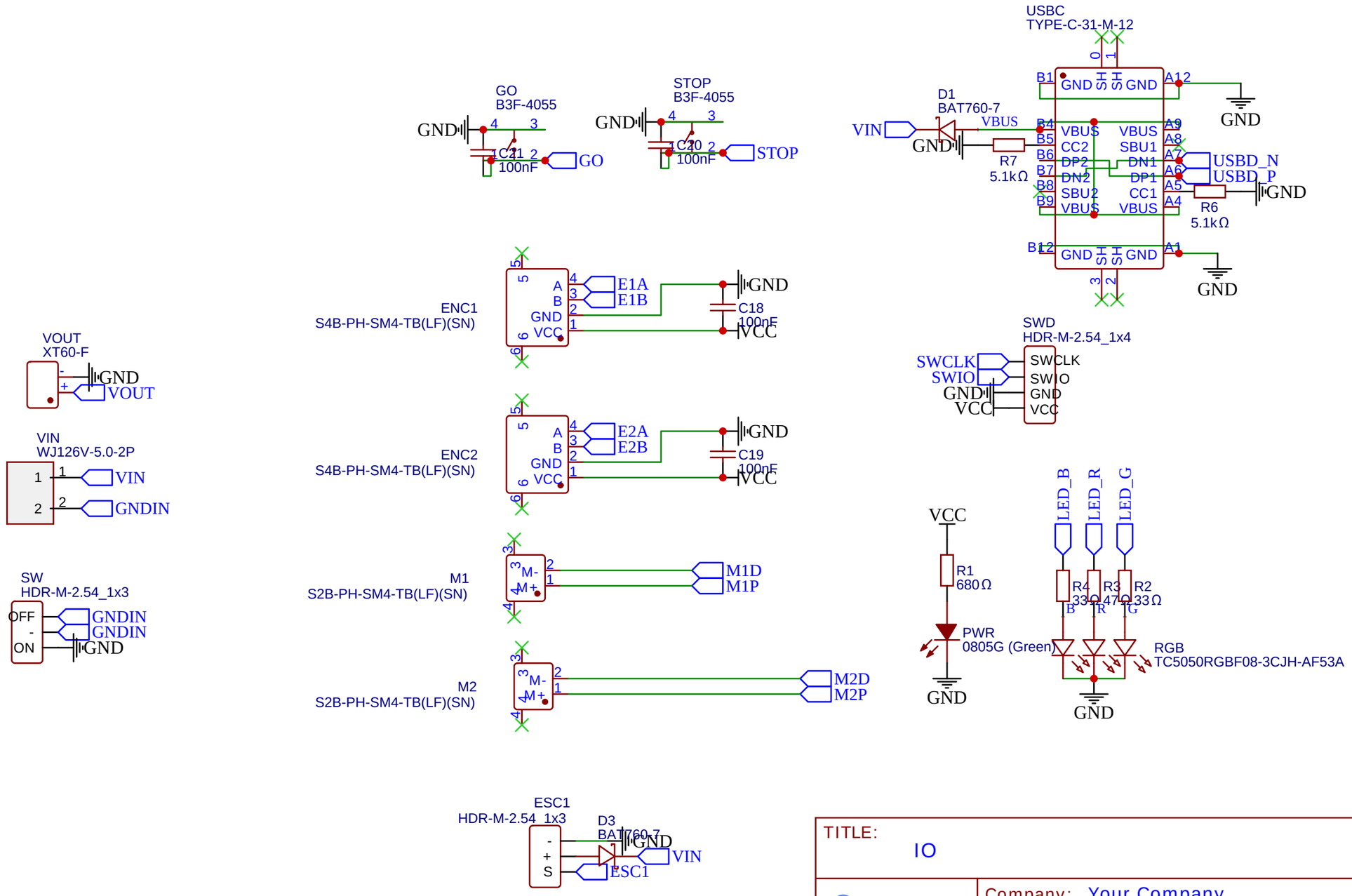

TITLE: IO		REV: 1.0
EasyEDA	Company: Your Company	Sheet: 1/1
	Date: 2024-06-23 Drawn By: nv7_eda	

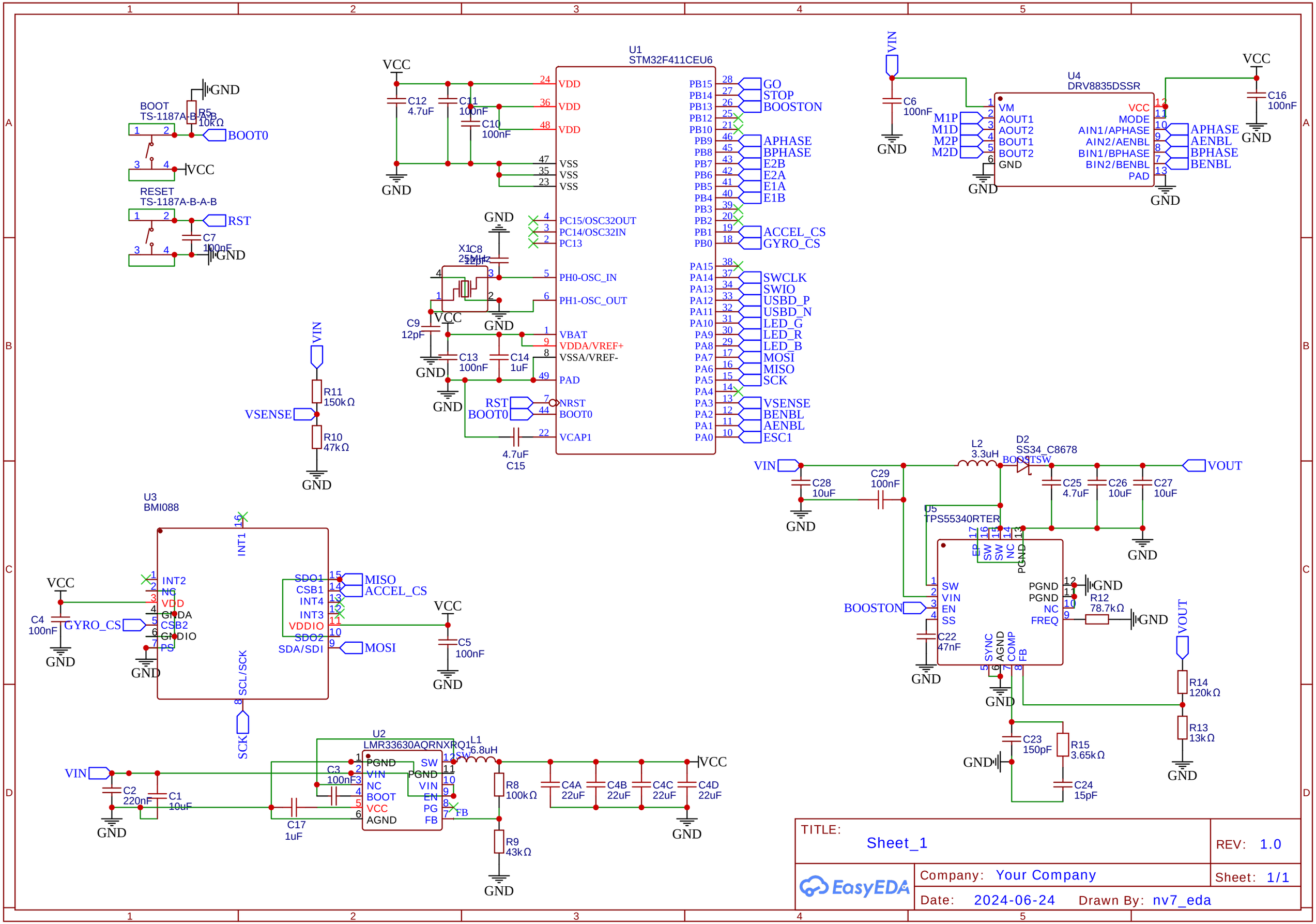

TITLE: Sheet_1	REV: 1.0
Company: Your Company	Sheet: 1/1
Date: 2024-06-24 Drawn By: nv7_eda	