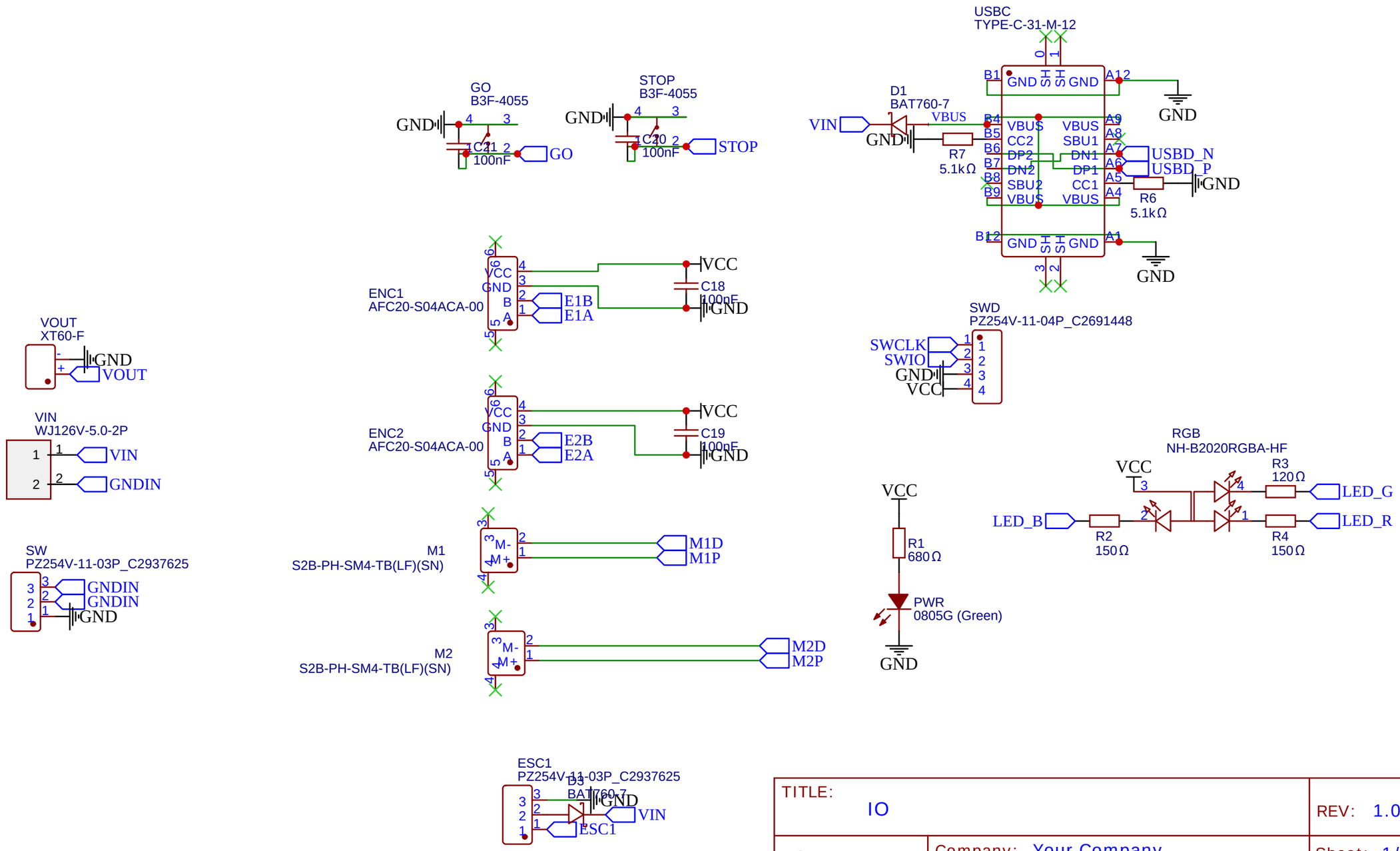

TITLE: IO		REV: 1.0
EasyEDA	Company: Your Company	Sheet: 1/1
	Date: 2024-06-23 Drawn By: nv7_eda	

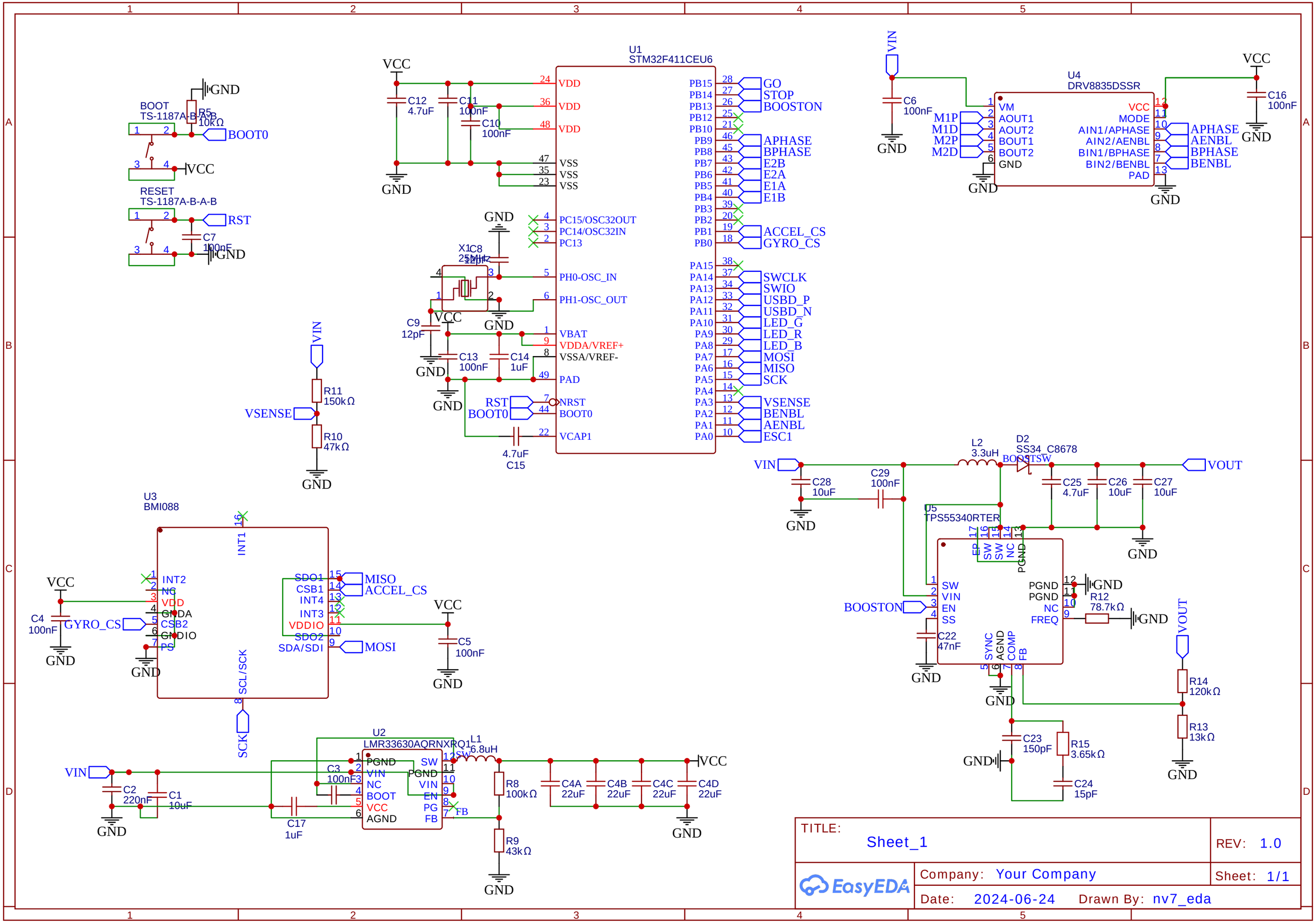
U1
STM32F411CEU6
U2
LMR33630AQRNXRQ1
U3
BMI088
U4
DRV8835DSSR
U5
TPS55340RTER
BOOT
TS-1187A-B-A-B
RESET
TS-1187A-B-A-B
R5
10kΩ
BOOT0
RST
C7
100nF
C12
4.7uF
C11
100nF
C10
100nF
X1
25MHz
C8
12pF
C9
12pF
C13
100nF
C14
1uF
4.7uF
C15
R11
150kΩ
R10
47kΩ
VSENSE
VIN
VCC
GND
C6
100nF
C16
100nF
M1P
M1D
M2P
M2D
APHASE
AENBL
BPHASE
BENBL
GO
STOP
BOOSTON
E2B
E2A
E1A
E1B
ACCEL_CS
GYRO_CS
SWCLK
SWIO
USBD_P
USBD_N
LED_G
LED_R
LED_B
MOSI
MISO
SCK
ESC1
C4
100nF
C5
100nF
INT1
INT2
SCL/SCK
C2
220nF
C1
10uF
C3
100nF
C17
1uF
L1
6.8uH
R8
100kΩ
R9
43kΩ
C4A
22uF
C4B
22uF
C4C
22uF
C4D
22uF
L2
3.3uH
D2
SS34_C8678
BOOTSW
VOUT
C28
10uF
C29
100nF
C25
4.7uF
C26
10uF
C27
10uF
C22
47nF
R12
78.7kΩ
R14
120kΩ
R13
13kΩ
C23
150pF
R15
3.65kΩ
C24
15pF
TITLE:
Sheet_1
REV: 1.0
Company: Your Company
Sheet: 1/1
Date: 2024-06-24
Drawn By: nv7_eda
EasyEDA