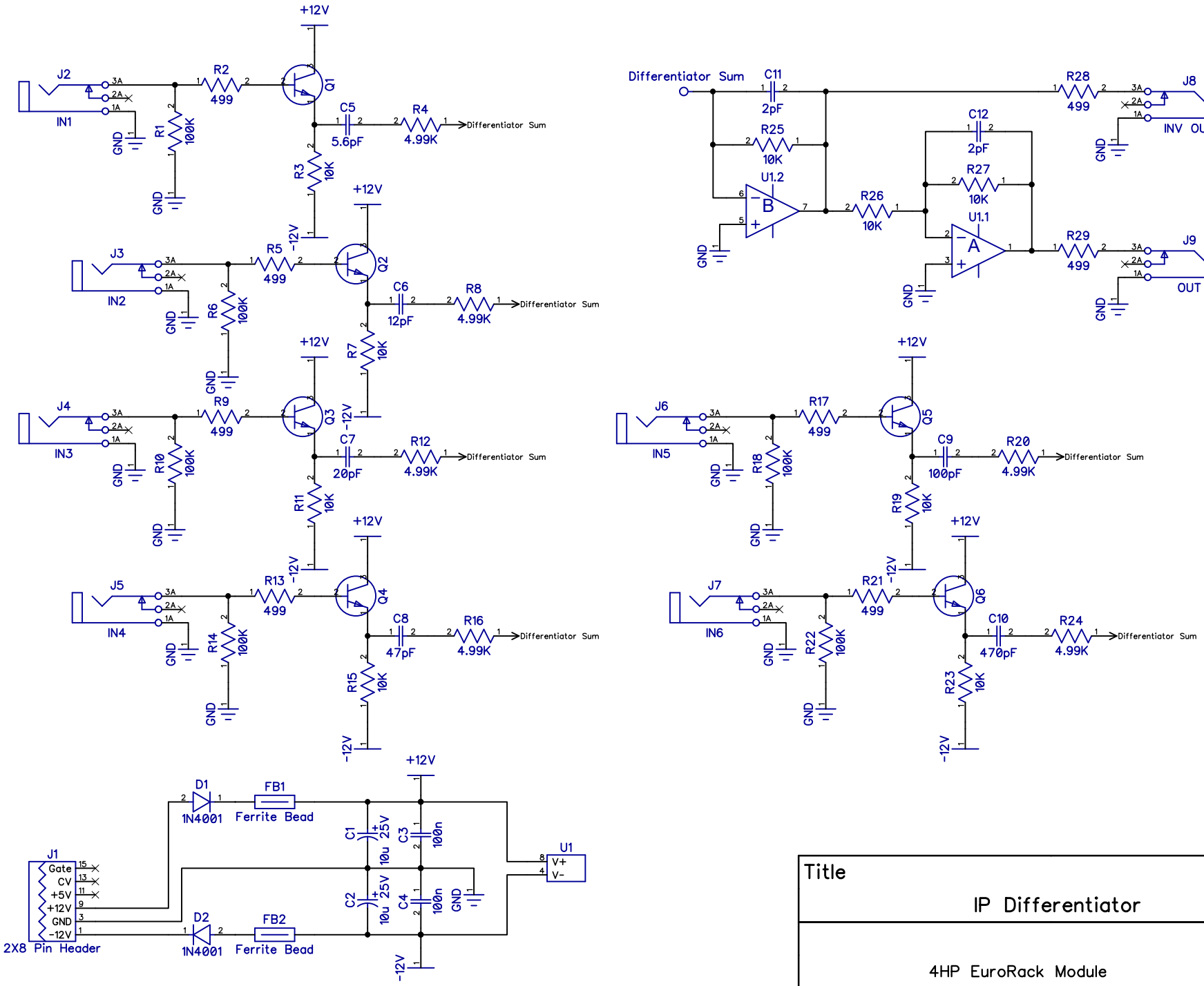

Original Design by D. Sandin. Update by L. Larsen E. Leckie.

Title	IP Differentiator
4HP EuroRack Module	Rev A
26-01-2021	Phil Baljeu
1:1	Sheet 1