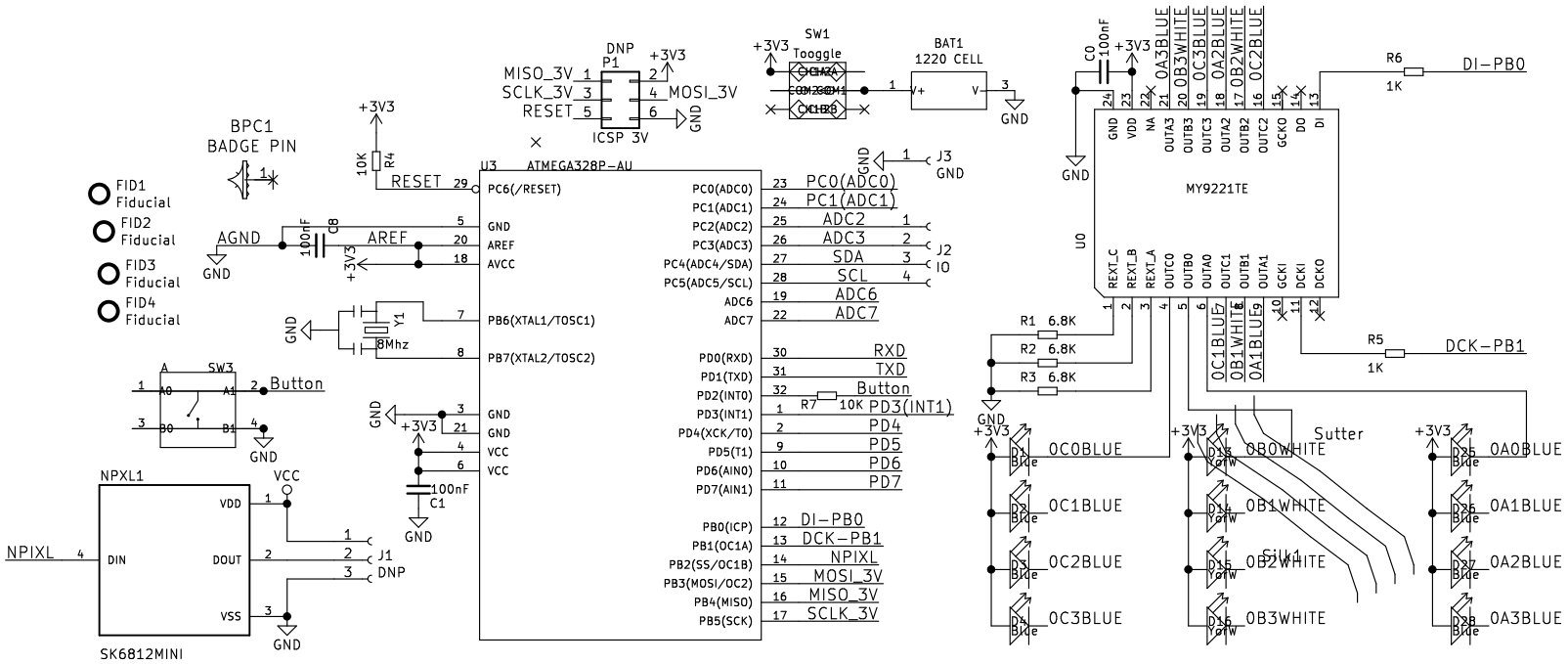

Sheet: /
File: MyBadge.sch

Title:

Size: A4	Date: 2 dec 2013	**Rev:**
KiCad E.D.A. kicad (5.1.2)-1		Id: 1/1