# EXPRESSIVE VOICE CONVERSION WITH CONTROLLABLE EMOTIONAL INTENSITY

*Nannan Teng*[1,2] *Ying Hu*[1,2*] *Zhijian Ou*[3] *Sheng Li*[4]

[1] Joint International Research Laboratory of Silk Road Multilingual Cognitive Computing, China
[2] School of Computer Science and Technology, Xinjiang University, China
[3] Department of Electrical Engineering, Tsinghua University, China
[4] School of Engineering, Institute of Science Tokyo, Japan

## ABSTRACT

Expressive voice conversion (VC) aims to transfer the speaker identity and emotion from the target speech to the source speech. In this paper, we propose an expressive voice conversion model with controllable emotional intensity named CEI-VC, which includes a specific attribute augmentation (SAA) training strategy for perturbing the speaker and emotional attributes of source speech, and an emotional disentanglement and intensity control (EDIC) module to control the emotional intensity of converted speech. Moreover, we leverage perturbation adaptive instance normalization (PbAdaIN) to further boost the synthesis quality. Experimental results demonstrate that our proposed CEI-VC outperforms five compared models and is capable of controlling the emotional intensity of converted speech. Demos and codes are available at https://tengnn.github.io/ExpressiveVC/.

***Index Terms—*** expressive voice conversion, data augmentation, emotional intensity control, feature perturbation

## 1. INTRODUCTION

Expressive voice conversion (VC) performs the transfer of speaker identity and emotion while preserving the linguistic content [1–6]. It improves human-robot interaction in dialogue systems and is used in movies and serials dubbing [7].

Early emotional VC methods, which only transfer the emotional style of speech, typically relied on parallel datasets [8, 9]. However, creating the corpora of parallel emotional speech is challenging, thus many researchers have begun to explore non-parallel speech synthesis. Guo et al. proposed to extract the content features from the pre-trained cross-lingual speech recognition model Whisper for cross-lingual VC, and introduce a style consistency loss to achieve better style conversion [2]. Guo et al. continued to propose the X-E-Speech to disentangle the speaker style and cross-lingual content features by jointly training VC and text-to-speech (TTS) models [3]. Yao et al. proposed the StableVC, which independently converts the timbre and style to unseen speakers by a conditional flow matching module and dual attention mechanism [4]. Akti et al. utilized a similarity loss and mixed-style layer normalization to reinforce style embeddings, realizing the transfer of both speaker identity and expressive attributes by incorporating local F0 information [5]. Zuo et al. proposed the PFlow-VC, which combined global timbre embeddings with time-varying timbre tokens and introduced discrete pitch tokens for expressive VC [6].

Currently, speech synthesis methods have achieved preferable performance in terms of speech quality. Therefore, many researchers have shifted their attention to speech synthesis with controllable emotional intensity. Zhou et al. proposed to use a learned ranking function to control emotional intensity for emotional VC [9]. For the task of TTS, Li et al. utilized a scalar to directly multiply the emotion embeddings for controlling the emotional intensity [10]. Cho et al. introduced a coordinate transformation that models an emotion-adaptive spherical vector to control emotional style and intensity [11].

Existing methods focus solely on either style conversion or emotional intensity control, neglecting the interplay between these two aspects. Therefore, we propose the CEI-VC, an expressive voice conversion model with controllable emotional intensity. The main contributions are as follows:

i) We propose a Specific Attribute Augmentation (SAA) strategy that improves robustness by perturbing speaker and emotional attributes with different approaches.
ii) We design an Emotional Disentanglement and Intensity Control (EDIC) module to achieve control over the emotional intensity of converted speech.
iii) We propose the Perturbation Adaptive Instance Normalization (PbAdaIN), which applies a perturbation to the style features within AdaIN layer to enhance the expressiveness of converted speech.

## 2. PROPOSED METHOD

The overall architecture of CEI-VC is illustrated in Fig. 1. During the training phase, the content encoder takes

*Corresponding author. This work is supported by the 2025 Local Government-Sponsored Study Abroad Program named Research on Multimodal Information Fusion Processing Methods and Central Guidance Local Science and Technology Development Fund (ZYYD2025JD10).

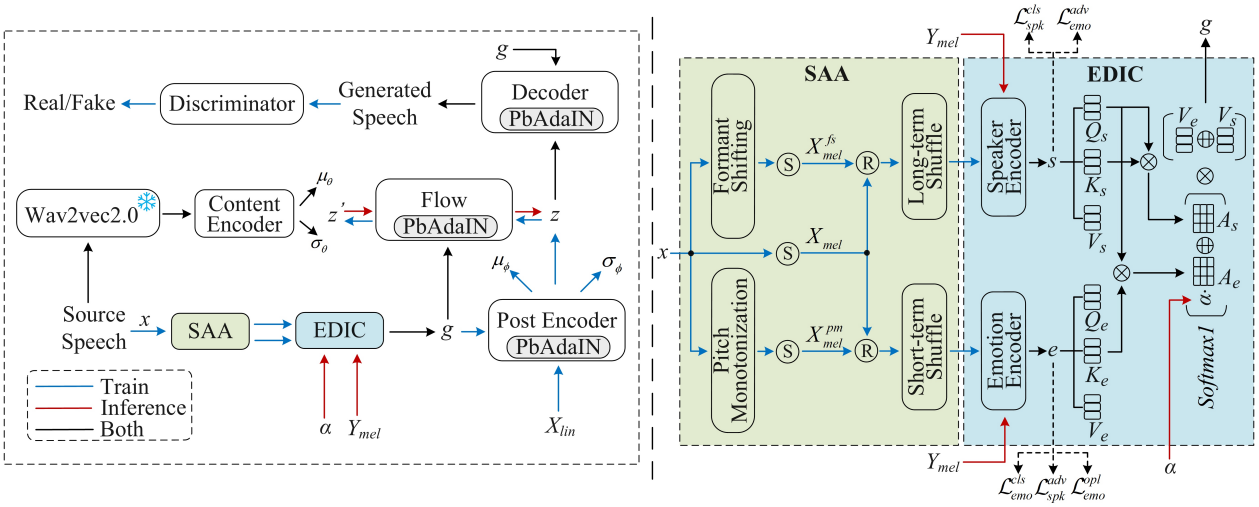


**Fig. 1**. Architecture of the proposed CEI-VC. The left half illustrates the overall architecture of CEI-VC, and the right half illustrates the flow diagram of the SAA strategy and EDIC module. $X_{lin}$ and $Y_{mel}$ represent the linear-spectrogram of source speech and mel-spectrogram of target one, respectively. The symbol $\oplus$ denotes the concatenation, Ⓡ the random replace and Ⓢ the short-time fourier transform (STFT). $s$, $e$, and $g$ represent speaker, emotion and style embeddings, respectively.

the self-supervised representations of source speech from Wav2vec2.0 as input to generate a prior distribution with the parameters $(\mu_\theta, \sigma_\theta)$. The post encoder takes the linear-spectrogram of source speech $X_{lin}$ as input to generate a posterior distribution with the parameters $(\mu_\phi, \sigma_\phi)$, from which a latent representation $z$ is sampled. The normalizing flow maps the posterior distribution to the prior distribution. SAA takes the source speech $x$ as input to generate two augmented mel-spectrograms, and feeds them into the EDIC module to obtain the style representations $g$, which is further fed into the post encoder, flow and decoder each of them equipped a PbAdaIN. The generated speech output from the decoder will be used to identify the real or fake by a discriminator. During the inference phase, the mel-spectrogram of target speech $Y_{mel}$ is fed into the EDIC module, together with an emotion-controllable parameter $\alpha$. Meanwhile, the reverse flow generates the style-injected representations $z$ from content features $z'$, enabling the converted speech to preserve the source content while adopting the target style.

### 2.1. Specific Attribute Augmentation

Lei et al. proposed to perturb the timbre and emotion-related features to obtain and model the timbre and emotion-independent signals for emotional TTS [12]. Sato et al. proposed ShuffleAugment, which randomly shuffles data along the time order, and applied it to tasks of speaker and speech emotion recognitions [13]. Inspired by [12, 13], we propose a Specific Attribute Augmentation (SAA) training strategy to enhance generalization. Specifically, we apply two distinct perturbation approaches on the source speech to perturb its speaker and emotional attributes, as shown in the upper and lower branches in SAA flow diagram of Fig. 1. The formant shifting function alters the speaker's timbre by resizing the spectrogram along the frequency dimension within a random range, while the pitch monotonization function suppresses the speaker's emotional expression by monotonizing the pitch values to the average pitch of the utterance. The perturbed signals generated by formant shifting and pitch monotonization functions together with original source speech $x$ are processed by STFT to obtain three spectrograms, $X^{fs}_{mel}$, $X^{pm}_{mel}$, $X_{mel}$. For each branch, we randomly replace the half mel-spectrogram of the perturbed signal with that of source speech, which partly preserves the original acoustic features.

To mitigate interference from linguistic information, we shuffle the perturbed signals of the two branches. For the upper branch, we perform the long-term shuffle by segmenting the mel-spectrogram into non-overlapping 25-frame blocks and randomly permutes them, while maintaining intra-block temporal coherence. For the lower branch, we perform the short-term shuffle by segmenting the mel-spectrogram into non-overlapping 30-frame blocks, subdividing each block into three 10-frame sub-blocks, and randomly shuffling the order of these sub-blocks while keeping the overall sequence of blocks unchanged.

### 2.2. Emotional Disentanglement and Intensity Control

Deng et al. proposed a reweighted attention mechanism to realize the image style transfer [16]. Li et al. proposed an emotional disentangling module to learn emotion and speaker embeddings for emotion transfer in text-to-speech [10]. We propose an Emotional Disentanglement and Intensity Control (EDIC) module referring to abovementioned methods [10, 16]

**Table 1**. Comparison with five models on subjective and objective metrics under the scenarios of seen-to-seen and unseen-to-unseen. Best performances are highlighted in bold, while second-best by an underline. The unseen means unseen speaker.

| | Seen-to-Seen | | | | | Unseen-to-Unseen | | | | | | |
|---|---|---|---|---|---|---|---|---|---|---|---|---|
| **Models** | **nMOS↑** | **sMOS↑** | **eMOS↑** | **SECS↑** | **EECS↑** | **nMOS↑** | **sMOS↑** | **eMOS↑** | **SECS↑** | **EECS↑** | **WER↓** | **Pub.** |
| Style-VC [1] | 3.51±0.50 | 3.45±0.50 | 3.67±0.47 | 0.8010 | 0.6642 | 3.09±0.28 | 2.53±0.50 | 2.42±0.49 | 0.6967 | 0.5816 | 17.80% | 22'Interspeech |
| ConsistencyVC [2] | 3.78±0.44 | 3.84±0.43 | 3.97±0.16 | 0.8509 | 0.6583 | 3.78±0.41 | 3.05±0.22 | 3.02±0.25 | 0.7449 | 0.5899 | 12.76% | 23'ASRU |
| X-E-Speech [3] | 4.01±0.11 | 3.87±0.33 | 3.98±0.13 | 0.8467 | 0.6957 | 3.90±0.33 | 3.14±0.42 | 3.29±0.46 | 0.7217 | 0.6132 | 13.99% | 24'Interspeech |
| DDDM-VC [14] | 4.10±0.43 | **4.04±0.29** | 4.01±0.08 | **0.8707** | 0.7390 | 3.96±0.22 | 3.37±0.41 | 3.20±0.45 | 0.7653 | 0.6342 | 14.20% | 24'AAAI |
| ExVC [15] | 4.00±0.47 | 4.03±0.34 | 4.00±0.06 | 0.8505 | 0.6990 | 3.94±0.24 | 3.26±0.44 | 3.18±0.38 | 0.7548 | 0.6257 | **12.30%** | 25'ICASSP |
| CEI-VC | **4.19±0.39** | 4.03±0.39 | **4.05±0.40** | 0.8656 | **0.7629** | **4.02±0.41** | **3.39±0.49** | **3.30±0.46** | **0.7755** | **0.6663** | 12.59% | — |

for realizing the controllability of emotional intensity.

As shown in Fig. 1, two shuffled mel-spectrograms obtained by SAA are fed into the speaker and emotion encoders to generate speaker embeddings $s$ and emotion embeddings $e$, which would be used to calculate the CE losses for speaker and emotion classifications, $\mathcal{L}_{spk}^{cls}$, $\mathcal{L}_{emo}^{cls}$, and the adversarial losses computed via gradient reversal layer (GRL) for emotion and speaker classifications, $\mathcal{L}_{emo}^{adv}$, $\mathcal{L}_{spk}^{adv}$, respectively. The disentanglement loss $L_{DIS}$ is as follows:

$$\mathcal{L}_{DIS} = \mathcal{L}_{spk}^{cls} + \mathcal{L}_{emo}^{adv} + \mathcal{L}_{emo}^{cls} + \mathcal{L}_{spk}^{adv} \tag{1}$$

where $cls$ denotes classification, and $adv$ adversarial.

Under the influence of disentanglement loss $\mathcal{L}_{DIS}$, emotion embeddings $e$ removing the speaker information will also partly lose the emotion information [17]. To mitigate this issue, we adopt the orthogonal projection loss $\mathcal{L}_{emo}^{opl}$ [17], which imposes the orthogonal constraint on the emotion embedding space, to reduce the loss of emotional information.

$$\mathcal{L}_{emo}^{opl} = (1 - \sum_{c_i=c_j}^{n} \langle e_i, e_j \rangle) + 0.5 * | \sum_{c_i \neq c_k}^{n} \langle e_i, e_k \rangle | \tag{2}$$

where $c$ denotes the emotion classes and $\langle \cdot, \cdot \rangle$ is the cosine similarity operator the two emotion embeddings. The second and third terms in Eq. 2 measure the similarities between the emotion embeddings of intra- and inter-classes, respectively.

We adopt the same *softmax1* with [18], which introduces an escape mechanism in the negative direction by adding 1 to the denominator of $softmax$ function. The style features $g$ is obtained by the united attention (UA) mechanism, which is inspired by [16] and [18]:

$$g = Softmax1\left(\left[\alpha \cdot \frac{Q_s K_e^T}{\sqrt{d}}, \frac{Q_s K_s^T}{\sqrt{d}}\right]\right) * \begin{bmatrix} V_e \\ V_s \end{bmatrix} \tag{3}$$

where $\alpha$ denotes the weight parameter, which is set to 1 during the training phase and input manually the inference phase.

The UA mechanism takes into account both the differences between the feature embeddings of same speaker, and that feature embeddings of speaker and emotion by concatenating the style cross-attention and the speaker self-attention. During the inference process, $\alpha$ is manually input to control the emotional intensity of converted speech.

### 2.3. Perturbation Adaptive Instance Normalization

Zhang et al. proposed a style adaptor to capture the style feature and uncertainty-modeling layer normalization (UMLN) to enhance generalization for singing voice synthesis model [19]. Existing VITS-based VC methods employ simple addition function to fuse style and hidden representations, resulting in insufficient expressiveness of converted speech [2, 20]. To mitigate this issue, we propose the Perturbation Adaptive Instance Normalization (PbAdaIN) based on UMLN [19]. The formula of AdaIN is defined as follows:

$$AdaIN(c, g) = \gamma(g)\left(\frac{c - \mu(c)}{\sigma(c)}\right) + \beta(g) \tag{4}$$

$c$ and $g$ denote the hidden and style representations, $\mu(\cdot)$ and $\sigma(\cdot)$ the mean and standard deviation functions. Scale parameter $\gamma(\cdot)$ and shift parameter $\beta(\cdot)$ are obtained through two linear layers with the input of same style features, respectively.

Our proposed PbAdaIN applies a perturbation on the style features within each AdaIN layer, which is defined as follows:

$$PbAdaIN(c, g) = \hat{\gamma}(g)\left(\frac{c - \mu(c)}{\sigma(c)}\right) + \hat{\beta}(g) \tag{5}$$

$$\widehat{\gamma}(g) = \gamma(g) + \lambda\epsilon_\gamma\sigma_\gamma(g), \widehat{\beta}(g) = \beta(g) + \lambda\epsilon_\beta\sigma_\beta(g) \tag{6}$$

where $\epsilon_\gamma, \epsilon_\beta \sim \mathcal{N}(0, 1)$, and $\sigma_\gamma(\cdot)$, $\sigma_\beta(\cdot)$ are the standard deviations of $\gamma(\cdot)$, $\beta(\cdot)$, respectively. $\lambda$ represents a hyperparameter and is set to 0.3 during the training phase.

## 3. EXPERIMENT

### 3.1. Experimental Setup and Evaluation Metrics

We conducted the experiments using the ESD English dataset, which contains 350 utterances spoken by 10 speakers in 5 emotional classes. The source and target speech under the unseen scenarios for testing are selected from the RAVDESS dataset. Five models are selected to be compared: Style-VC [1]; ConsistencyVC [2]; X-E-Speech [3]; DDDM-VC [14]; ExVC [15]. For a fair comparison, we implemented five models on the same dataset.

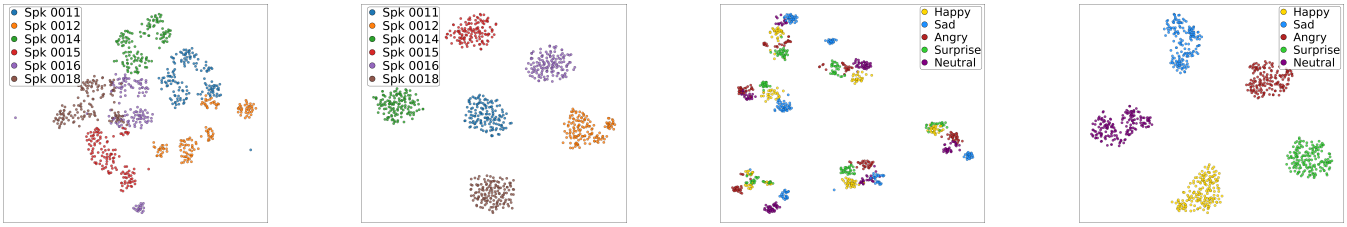


**Fig. 2**. The t-SNE visualization of speaker and emotion feature distributions. The two sub-figures in the left half illustrate the speaker feature distributions before and after applying the loss $\mathcal{L}_{DIS}$, while the two sub-figures in the right half illustrate the emotion feature distributions under the same conditions.

**Table 2**. Ablation study of three key components in CEI-VC under the unseen-to-unseen scenario.

| Models | nMOS↑ | sMOS↑ | eMOS↑ | SECS↑ | EECS↑ | WER↓ |
|---|---|---|---|---|---|---|
| CEI-VC | 4.02±0.41 | 3.39±0.49 | 3.30±0.46 | 0.7755 | 0.6663 | 12.59% |
| - UA | 3.94±0.24 | 3.28±0.45 | 3.24±0.47 | 0.7562 | 0.6455 | 16.49% |
| - SAA | 3.97±0.18 | 3.21±0.41 | 3.20±0.44 | 0.7447 | 0.6346 | 14.83% |
| - PbAdaIN | 3.94±0.23 | 3.23±0.42 | 3.24±0.44 | 0.7455 | 0.6351 | 15.65% |
| - SAA, PbAdaIN | 3.96±0.24 | 3.10±0.30 | 3.03±0.24 | 0.7358 | 0.6181 | 14.39% |

We conducted subjective and objective evaluations. Subjective metrics include Naturalness MOS (nMOS), Speaker Similarity MOS (sMOS) and Emotion Similarity MOS (eMOS), all on a 1–5 scale. Objective metrics include Word Error Rate (WER[1]), Speaker Embedding Cosine Similarity (SECS[2]) and Emotion Embedding Cosine Similarity (EECS[3]). The scores for all subjective metrics are averaged based on ratings from 15 proficient English volunteers for 40 samples, and objective metrics are computed on 800 samples.

### 3.2. Performance Comparison and Ablation Study

We compared CEI-VC with five models under the scenarios of seen-to-seen and unseen-to-unseen, as shown in Table 1. Under the seen-to-seen scenario, CEI-VC demonstrates outstanding performance in naturalness and emotion similarity, but slightly underperforms DDDM-VC in speaker similarity. Under the unseen-to-unseen scenario, CEI-VC is marginally inferior to ExVC only in intelligibility, while outperforming all comparative models in other respects.

We conducted the ablation study to verify the effectiveness of three key components. Without UA means that CEI-VC adopts the vanilla cross-attention mechanism instead of UA in Eq. 3. As shown in Table 2, without SAA, PbAdaIN, or UA, CEI-VC all has decreased performances to some extent. These demonstrate that three key components are all effective for CEI-VC with controllable emotional intensity. Fig. 2 illustrates the t-SNE visualization of speaker and emotion feature distributions before and after applying the loss $\mathcal{L}_{DIS}$. It intuitively demonstrates the effectiveness of loss $\mathcal{L}_{DIS}$ for the disentanglement of speaker and emotion features, and realizing emotional intensity control.

[1]https://huggingface.co/openai/whisper-large
[2]https://huggingface.co/microsoft/wavlm-base-plus-sv
[3]https://huggingface.co/emotion2vec/emotion2vec_plus_large

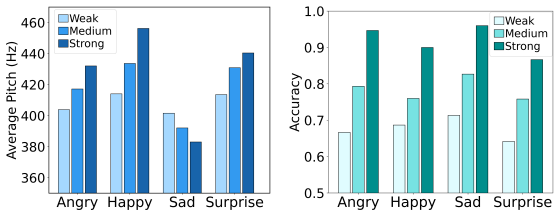


**Fig. 3**. The bar charts of average pitch (left) and subjective emotion classification accuracy (right) of converted speech based on three emotional intensities.

### 3.3. Controllability of Emotional Intensity

For the CEI-VC model, one can control the emotional intensity by altering the value of parameter $\alpha$, which is set to 0.2, 0.5 and 0.9 corresponding to the emotional intensity of weak, medium and strong. As shown in Fig. 3, we calculated the average pitch and the subjective emotion classification accuracy of the converted speech based on three emotional intensities. It shows that as the emotional intensity increases, the pitches of speech except the type of sad emotion also increase, and the accuracy of emotion classification increase, reflecting the nature of the emotion. These results indicate that CEI-VC can control the intensity of emotion in converted speech.

## 4. CONCLUSION

In this paper, we propose the CEI-VC model for expressive voice conversion with controllable emotional intensity. It comprises three key components, SAA strategy, EDIC module, and PbAdaIN. Experimental results demonstrate that CEI-VC can effectively control the emotional intensity of converted speech, and achieves outstanding performance.

## 5. REFERENCES


[1] Zongyang Du, Berrak Sisman, Kun Zhou, and Haizhou Li, "Disentanglement of emotional style and speaker identity for expressive voice conversion," in *Interspeech 2022*, 2022, pp. 2603–2607.

[2] Houjian Guo, Chaoran Liu, Carlos Toshinori Ishi, and Hiroshi Ishiguro, "Using joint training speaker encoder with consistency loss to achieve cross-lingual voice conversion and expressive voice conversion," in *2023 ASRU*. IEEE, 2023, pp. 1–8.

[3] Houjian Guo, Chaoran Liu, Carlos Toshinori Ishi, and Hiroshi Ishiguro, "Xe-speech: Joint training framework of nonautoregressive cross-lingual emotional text-to-speech and voice conversion,"," in *Proc. Interspeech 2024*, 2024, pp. 4983–4987.

[4] Jixun Yao, Yang Yuguang, Yu Pan, Ziqian Ning, Jianhao Ye, Hongbin Zhou, and Lei Xie, "Stablevc: Style controllable zero-shot voice conversion with conditional flow matching," in *AAAI*, 2025, vol. 39, pp. 25669–25677.

[5] Şeymanur Akti and Tuan-Nam Nguyen and Alexander Waibel, "Towards Better Disentanglement in Non-Autoregressive Zero-Shot Expressive Voice Conversion," in *Interspeech 2025*, 2025, pp. 1358–1362.

[6] Jialong Zuo, Shengpeng Ji, Minghui Fang, Ziyue Jiang, Xize Cheng, Qian Yang, Wenrui Liu, Guangyan Zhang, Zehai Tu, Yiwen Guo, et al., "Enhancing expressive voice conversion with discrete pitch-conditioned flow matching model," in *ICASSP*. IEEE, 2025, pp. 1–5.

[7] Ashishkumar Prabhakar Gudmalwar, Ishan Darshan Biyani, Nirmesh J Shah, Pankaj Wasnik, and Rajiv Ratn Shah, "Emoreg: Directional latent vector modeling for emotional intensity regularization in diffusion-based voice conversion," in *AAAI*, 2025, vol. 39, pp. 23960–23968.

[8] Kun Zhou, Berrak Sisman, and Haizhou Li, "Limited data emotional voice conversion leveraging text-to-speech: Two-stage sequence-to-sequence training," in *Interspeech 2021*, 2021, pp. 811–815.

[9] Kun Zhou, Berrak Sisman, Rajib Rana, Björn W Schuller, and Haizhou Li, "Emotion intensity and its control for emotional voice conversion," *IEEE Transactions on Affective Computing*, vol. 14, no. 1, pp. 31–48, 2022.

[10] Tao Li, Xinsheng Wang, Qicong Xie, Zhichao Wang, and Lei Xie, "Cross-speaker emotion disentangling and transfer for end-to-end speech synthesis," *IEEE/ACM Transactions on Audio, Speech, and Language Processing*, vol. 30, pp. 1448–1460, 2022.

[11] Deok-Hyeon Cho, Hyung-Seok Oh, Seung-Bin Kim, and Seong-Whan Lee, "Emosphere++: Emotion-controllable zero-shot text-to-speech via emotion-adaptive spherical vector," *IEEE Transactions on Affective Computing*, 2025.

[12] Yi Lei, Shan Yang, Xinfa Zhu, Lei Xie, and Dan Su, "Cross-speaker emotion transfer through information perturbation in emotional speech synthesis," *IEEE Signal Processing Letters*, vol. 29, pp. 1948–1952, 2022.

[13] Yoshinao Sato, Narumitsu Ikeda, and Hirokazu Takahashi, "Shuffleaugment: A data augmentation method using time shuffling," in *ICASSP*. IEEE, 2023, pp. 1–5.

[14] Ha-Yeong Choi, Sang-Hoon Lee, and Seong-Whan Lee, "Dddm-vc: Decoupled denoising diffusion models with disentangled representation and prior mixup for verified robust voice conversion," in *AAAI*, 2024, vol. 38, pp. 17862–17870.

[15] Obed Irihose and Le Zhang, "Exvc: Leveraging mixture of experts models for efficient zero-shot voice conversion," in *ICASSP*. IEEE, 2025, pp. 1–5.

[16] Yingying Deng, Xiangyu He, Fan Tang, and Weiming Dong, "Z*: Zero-shot style transfer via attention reweighting," in *Proceedings of the IEEE/CVF Conference on Computer Vision and Pattern Recognition*, 2024, pp. 6934–6944.

[17] Tao Li, Chenxu Hu, Jian Cong, Xinfa Zhu, Jingbei Li, Qiao Tian, Yuping Wang, and Lei Xie, "Diclet-tts: Diffusion model based cross-lingual emotion transfer for text-to-speech—a study between english and mandarin," *IEEE/ACM Transactions on Audio, Speech, and Language Processing*, vol. 31, pp. 3418–3430, 2023.

[18] Ziqian Ning, Yuepeng Jiang, Pengcheng Zhu, Shuai Wang, Jixun Yao, Lei Xie, and Mengxiao Bi, "Dualvc 2: Dynamic masked convolution for unified streaming and non-streaming voice conversion," in *ICASSP*. IEEE, 2024, pp. 11106–11110.

[19] Yu Zhang, Rongjie Huang, Ruiqi Li, JinZheng He, Yan Xia, Feiyang Chen, Xinyu Duan, Baoxing Huai, and Zhou Zhao, "Stylesinger: Style transfer for out-of-domain singing voice synthesis," in *AAAI*, 2024, vol. 38, pp. 19597–19605.

[20] Jingyi Li, Weiping Tu, and Li Xiao, "Freevc: Towards high-quality text-free one-shot voice conversion," in *ICASSP*. IEEE, 2023, pp. 1–5.