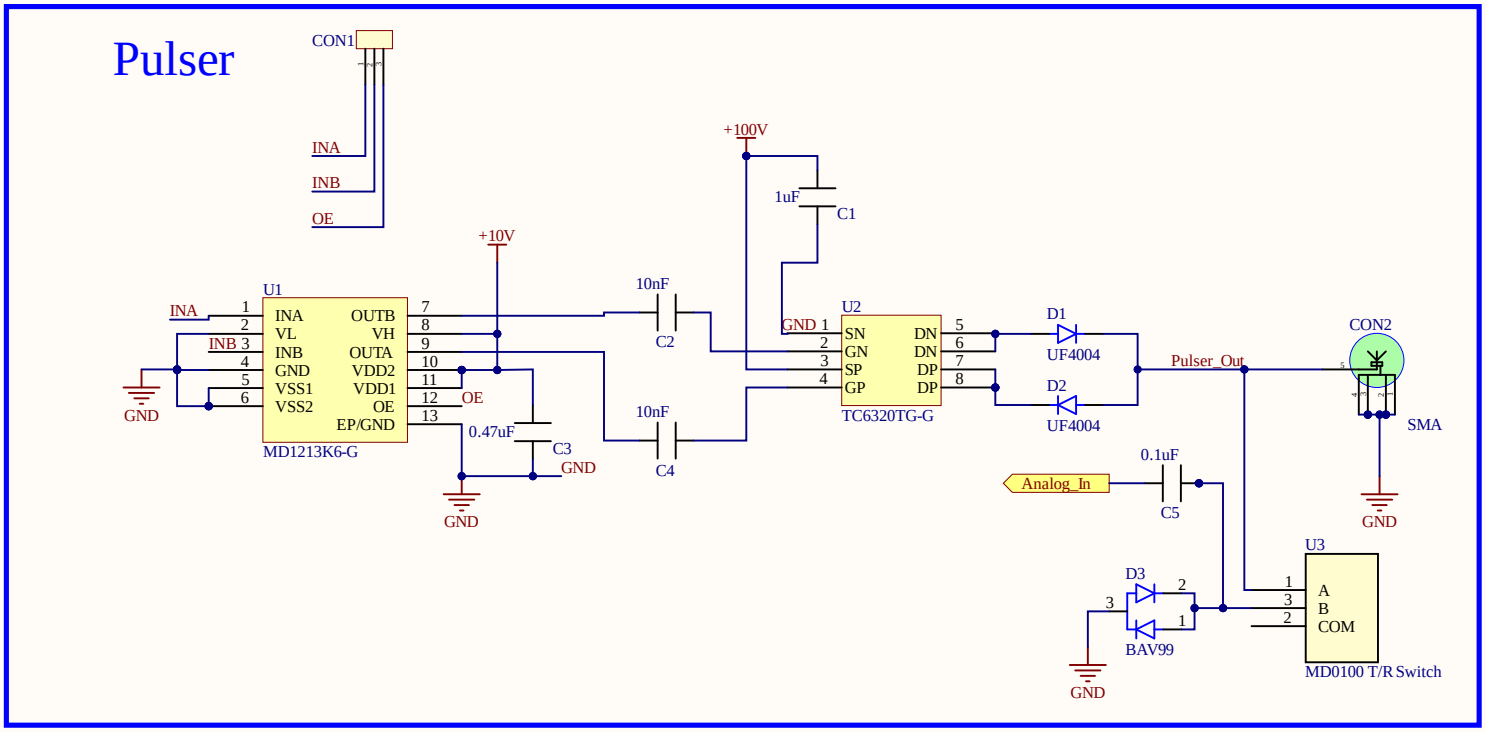

Title		
Size A4	Number	Revision
Date: 3/31/2026		Sheet of
File: C:\Projects\..\Pulser.SchDoc		Drawn By:

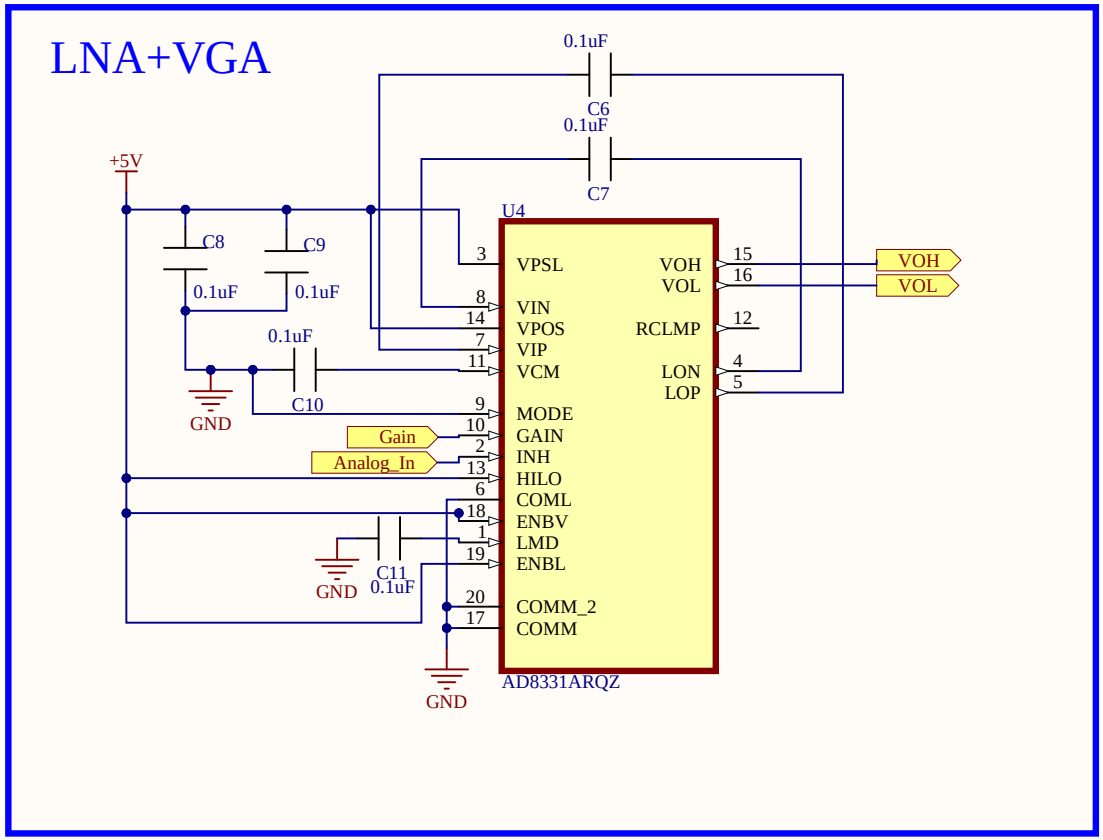

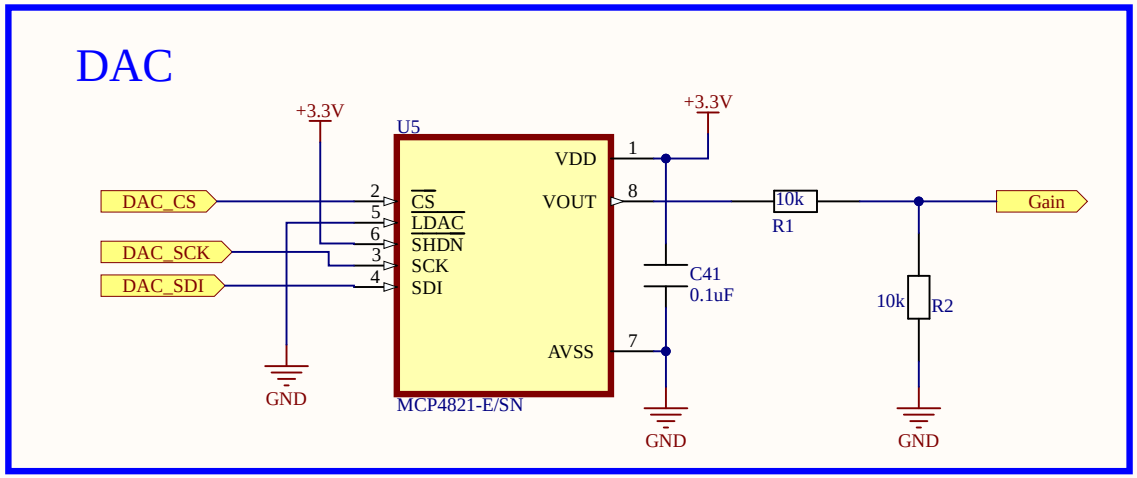

Title		
Size A	Number	Revision
Date: 3/31/2026		Sheet of
File: C:\Projects\..\Analog Front End.SchDoc		Drawn By:

ADC + FPGA Connector

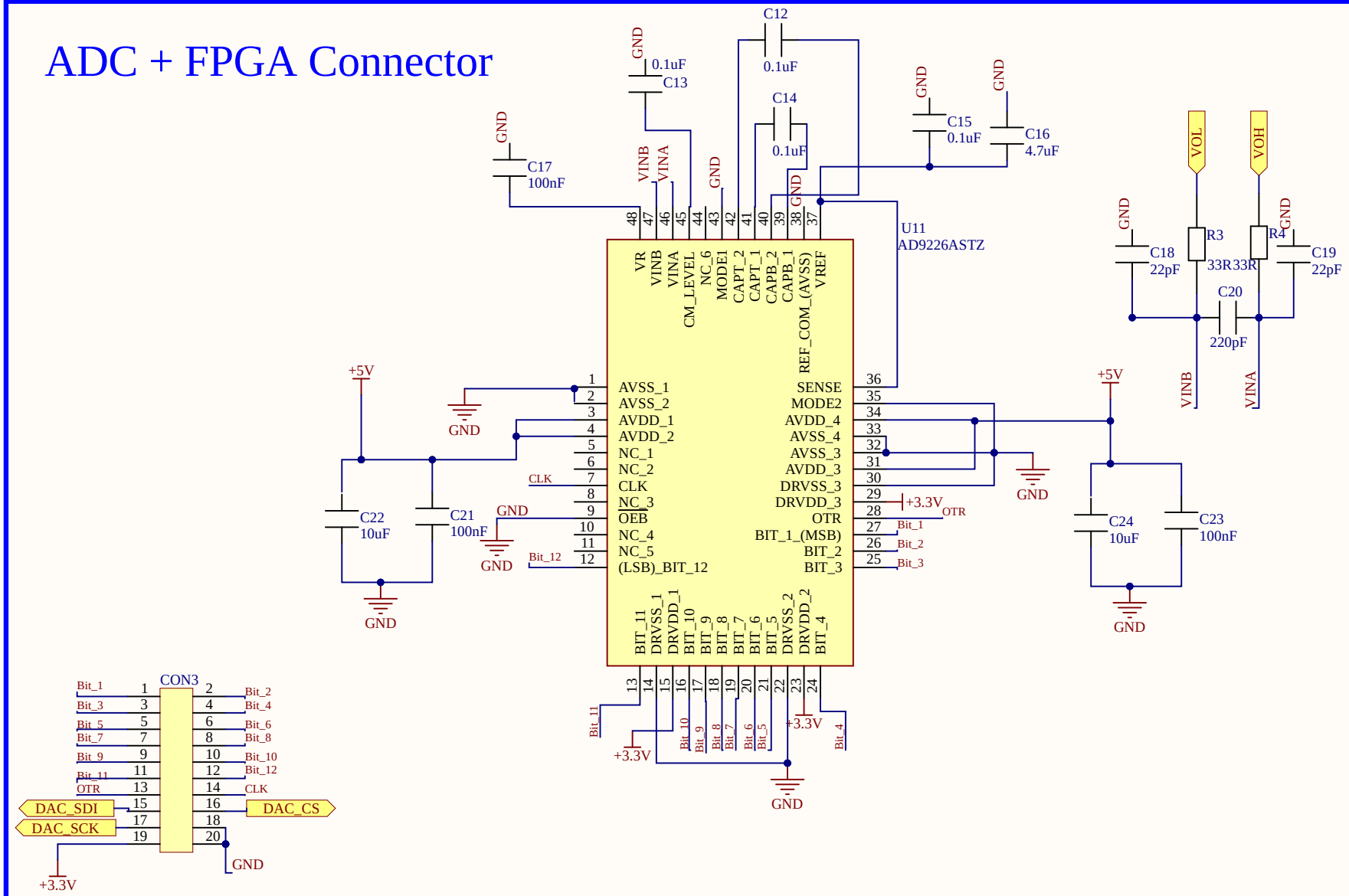

Title		
Size A	Number	Revision
Date: 3/31/2026		Sheet of
File: C:\Projects\..\ADC.SchDoc		Drawn By:

Power LDOs + Jack Connectors

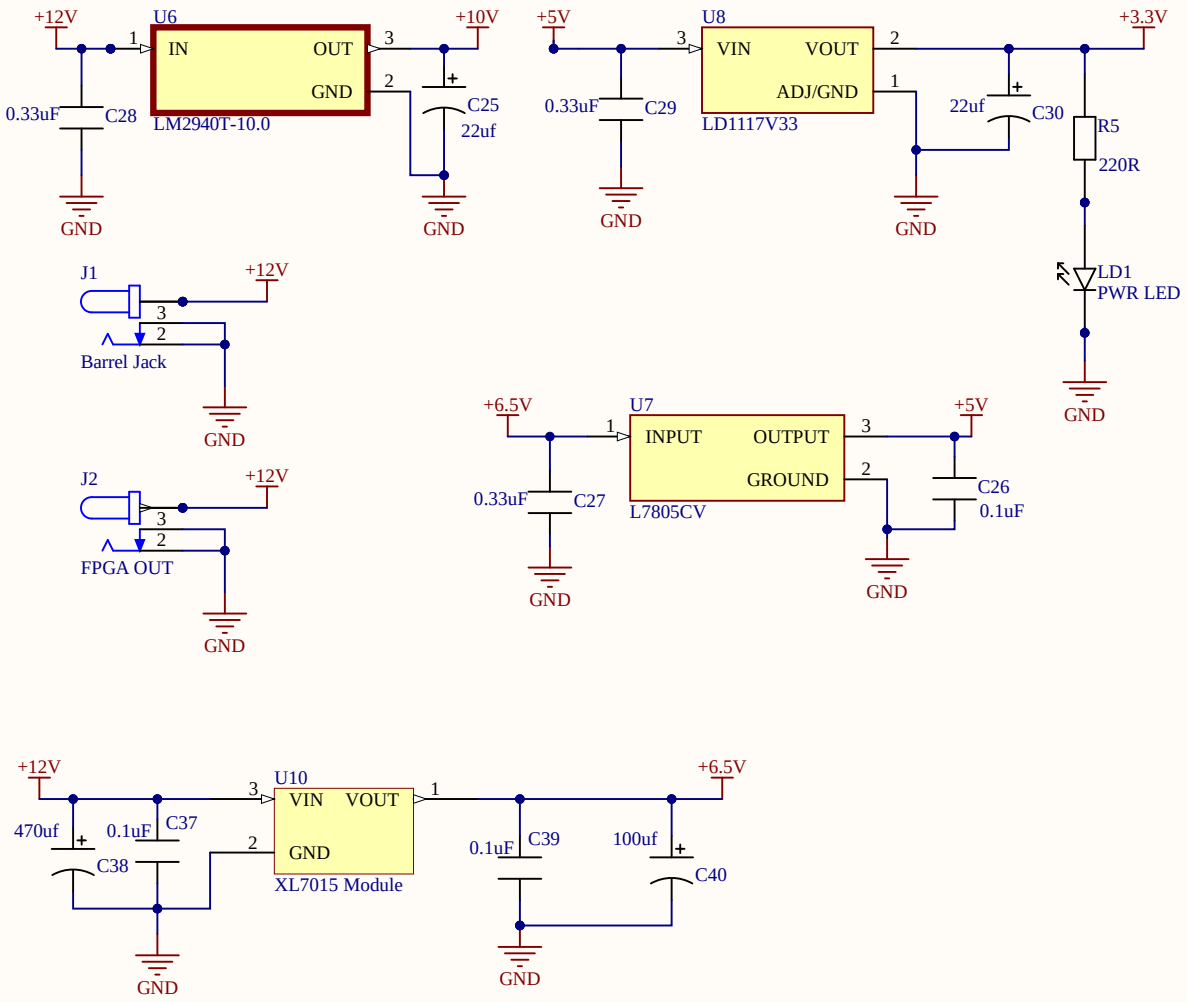

Title		
Size A	Number	Revision
Date: 3/31/2026		Sheet of
File: C:\Projects\..\Power.SchDoc		Drawn By:

Boost Converter

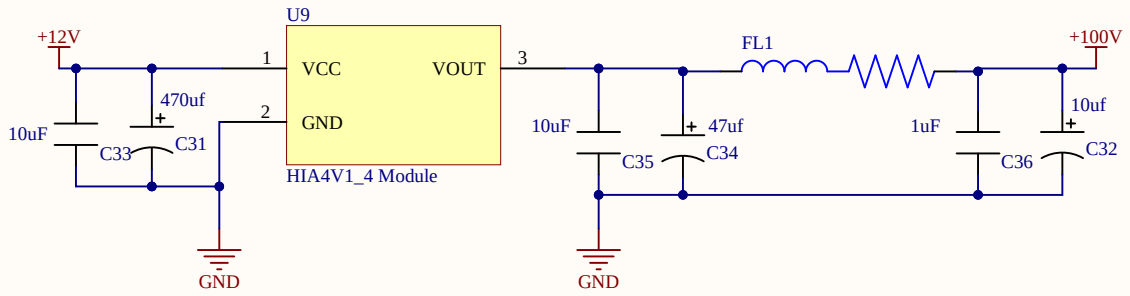

Title		
Size A	Number	Revision
Date: 3/31/2026		Sheet of
File: C:\Projects\..\Boost Converter.SchDoc		Drawn By:

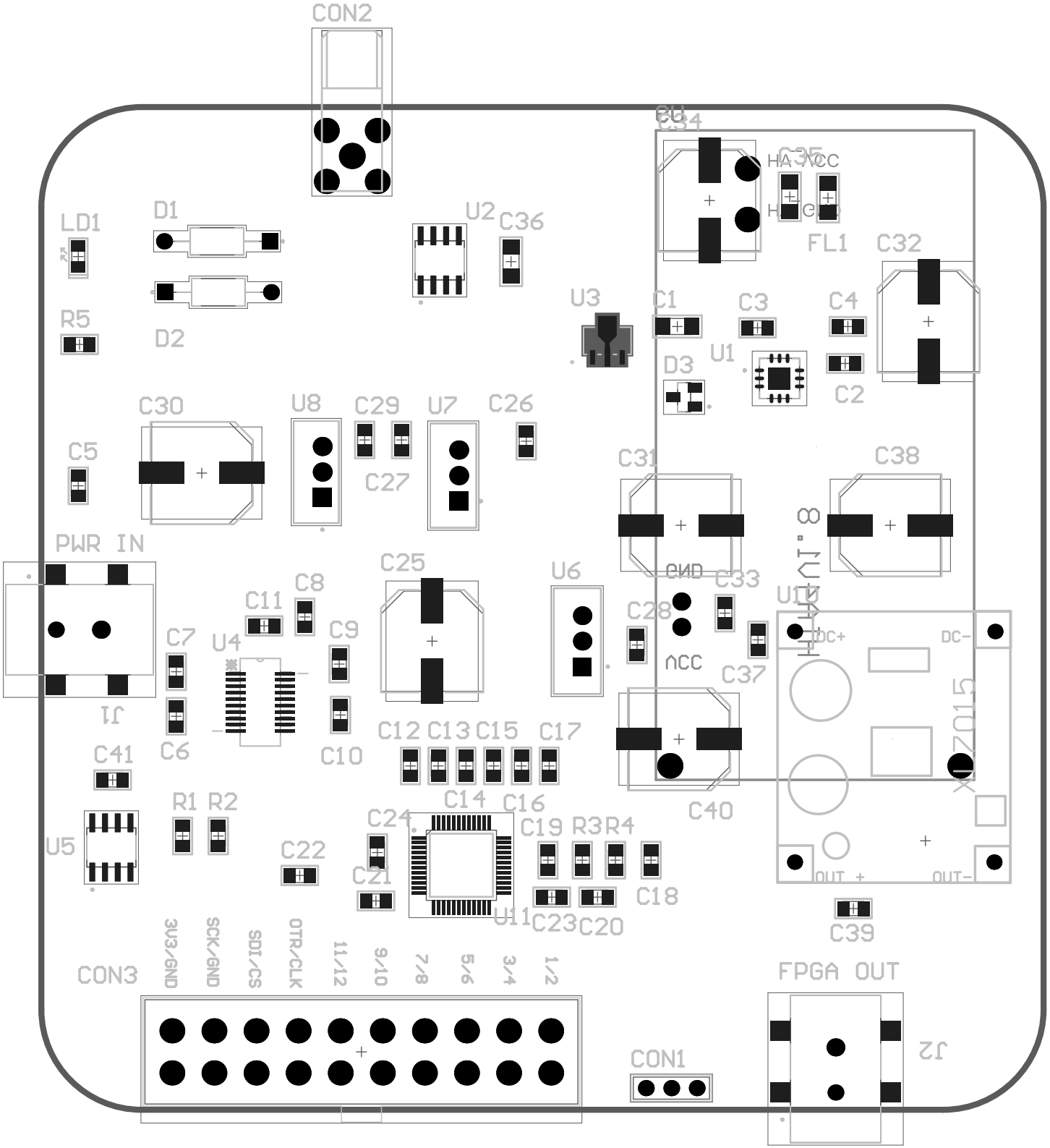
CON2
LD1
D1
D2
R5
U2
C36
U3
C1
C3
C4
C2
U1
D3
FL1
C32
C34
C35
HA VCC
HA GND
C30
C5
U8
C29
C27
U7
C26
C31
C38
PWR IN
J1
C25
U6
C8
C11
C7
U4
C9
C6
C10
C28
C33
U10
DC+
DC-
OUT +
OUT-
C37
C40
C12
C13
C15
C17
C41
R1
R2
U5
C14
C16
C24
C22
C21
C19
R3
R4
C18
U11
C23
C20
C39
CON3
3V3/GND
SCK/GND
SDI/CS
OTR/CLK
11/12
9/10
7/8
5/6
3/4
1/2
CON1
FPGA OUT
J2