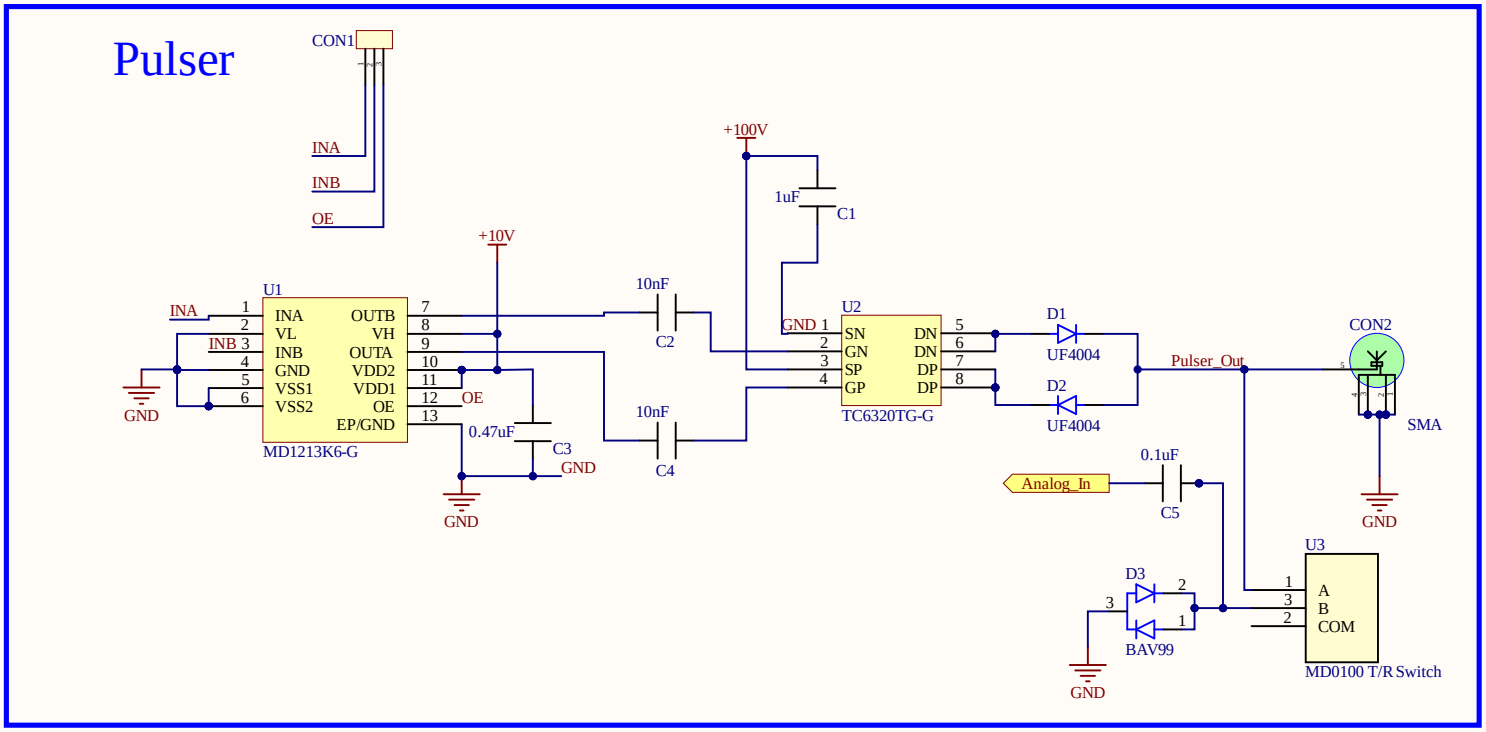

Title		
Size A4	Number	Revision
Date: 3/31/2026		Sheet of
File: C:\Projects\..\Pulser.SchDoc		Drawn By:

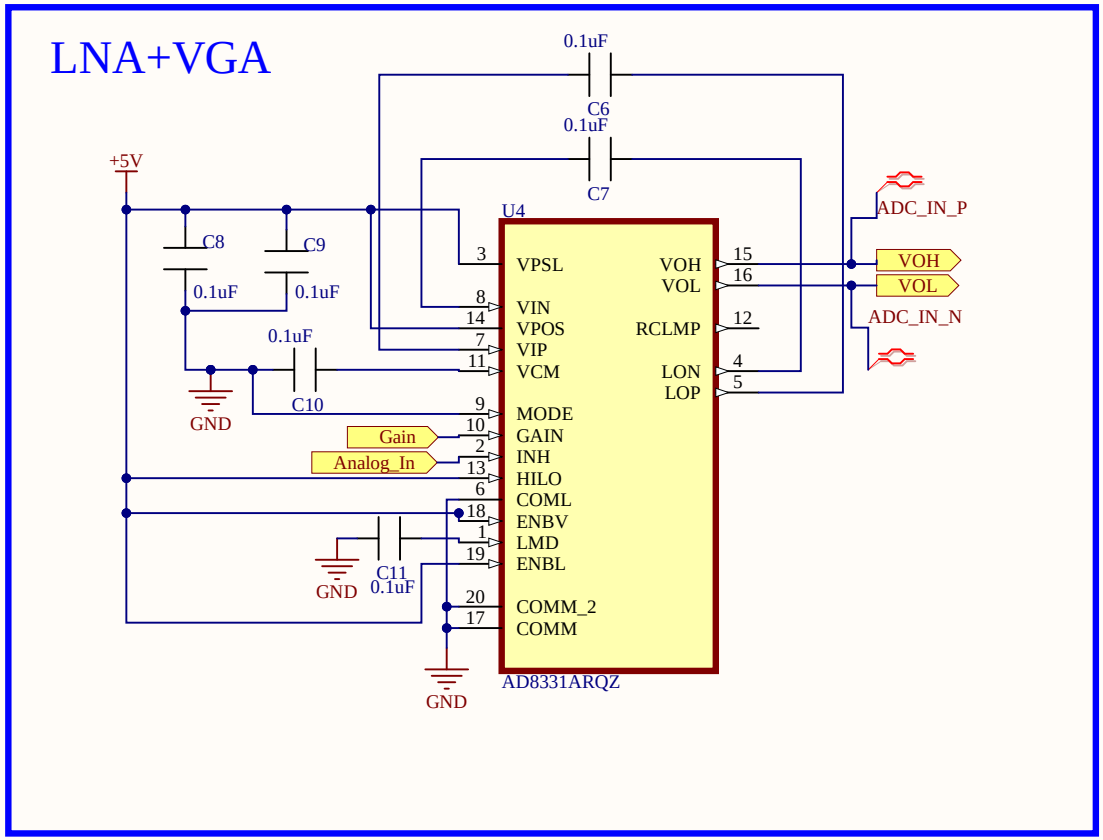

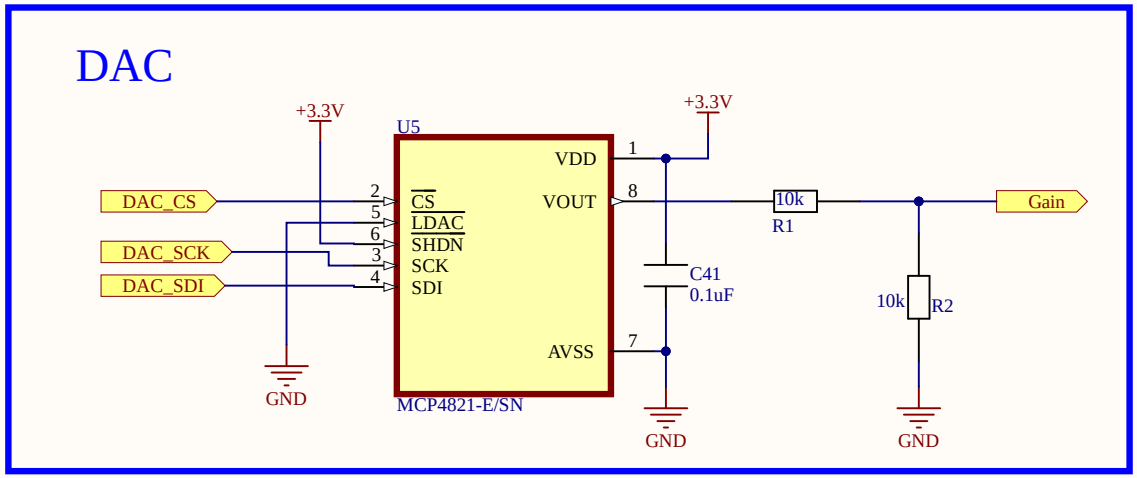

Title		
Size A	Number	Revision
Date: 3/31/2026	Sheet of	
File: C:\Projects\..\Analog Front End.SchDoc	Drawn By:	

ADC + FPGA Connector

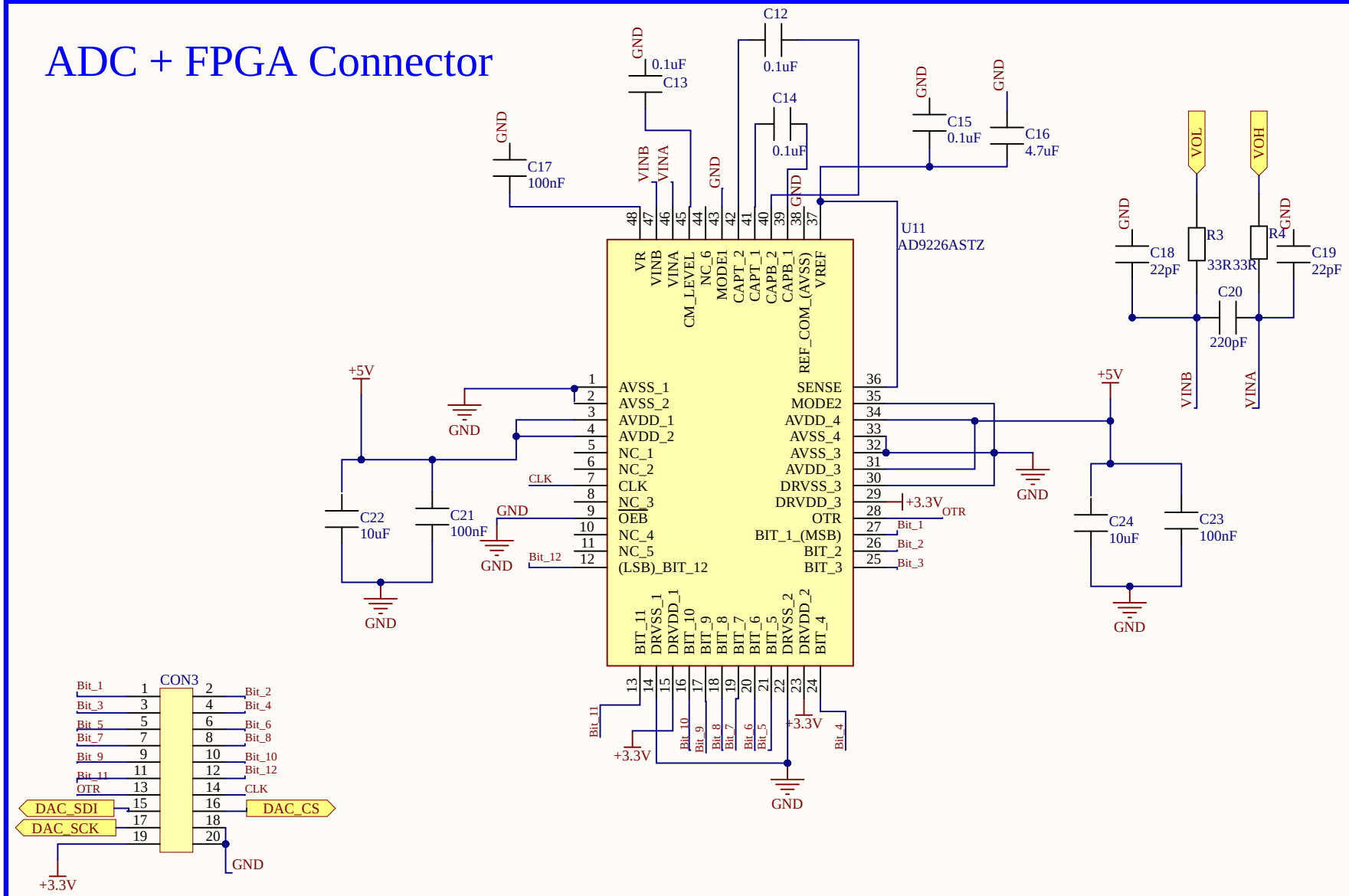

Title		
Size A	Number	Revision
Date: 3/31/2026		Sheet of
File: C:\Projects\..\ADC.SchDoc		Drawn By:

Power LDOs + Jack Connectors

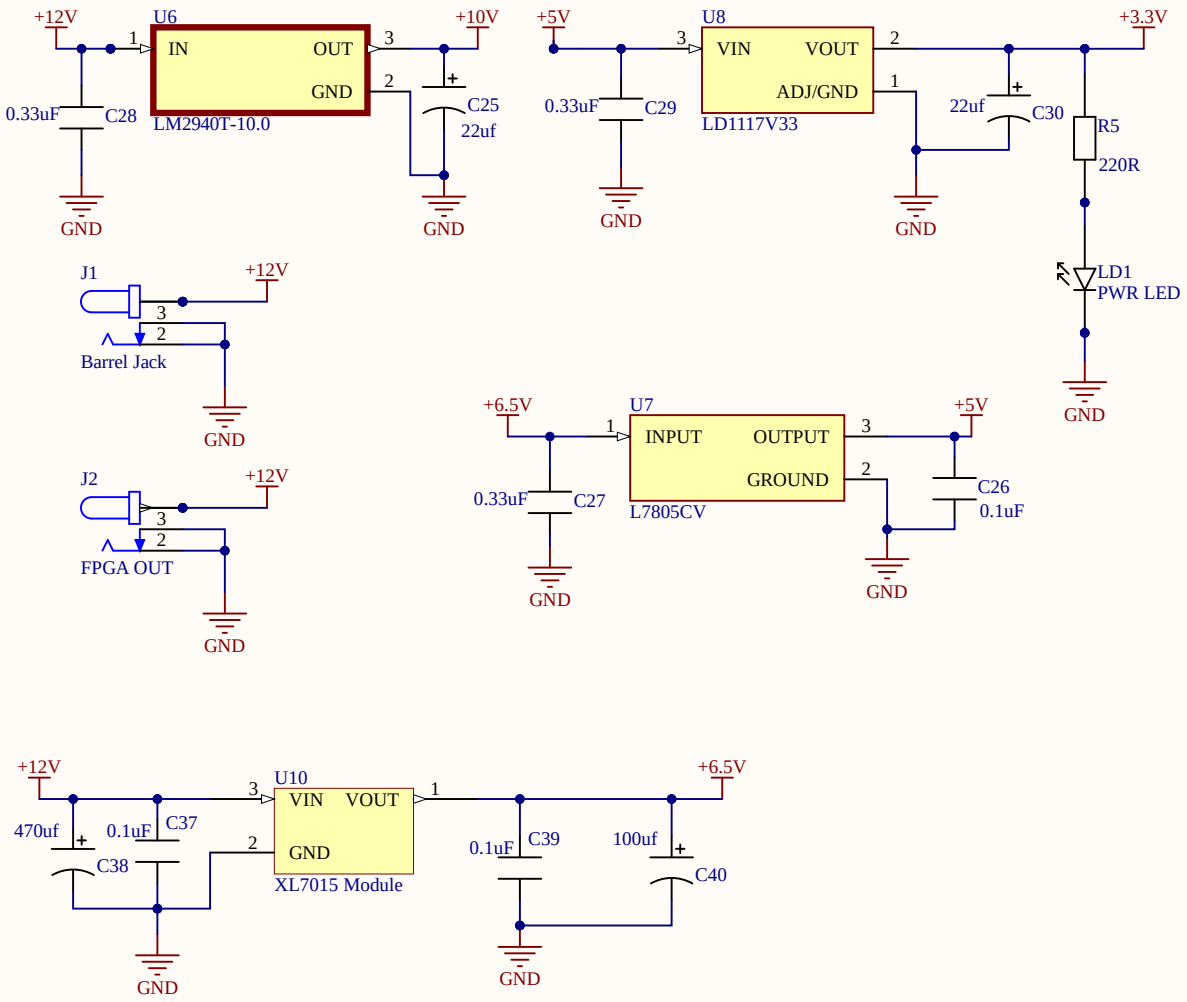

Title		
Size A	Number	Revision
Date: 3/31/2026		Sheet of
File: C:\Projects\..\Power.SchDoc		Drawn By:

Boost Converter

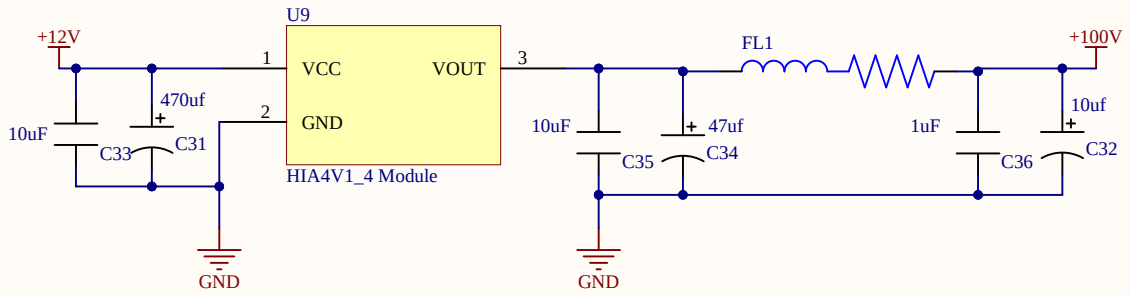

Title		
Size A	Number	Revision
Date: 3/31/2026		Sheet of
File: C:\Projects\..\Boost Converter.SchDoc		Drawn By:

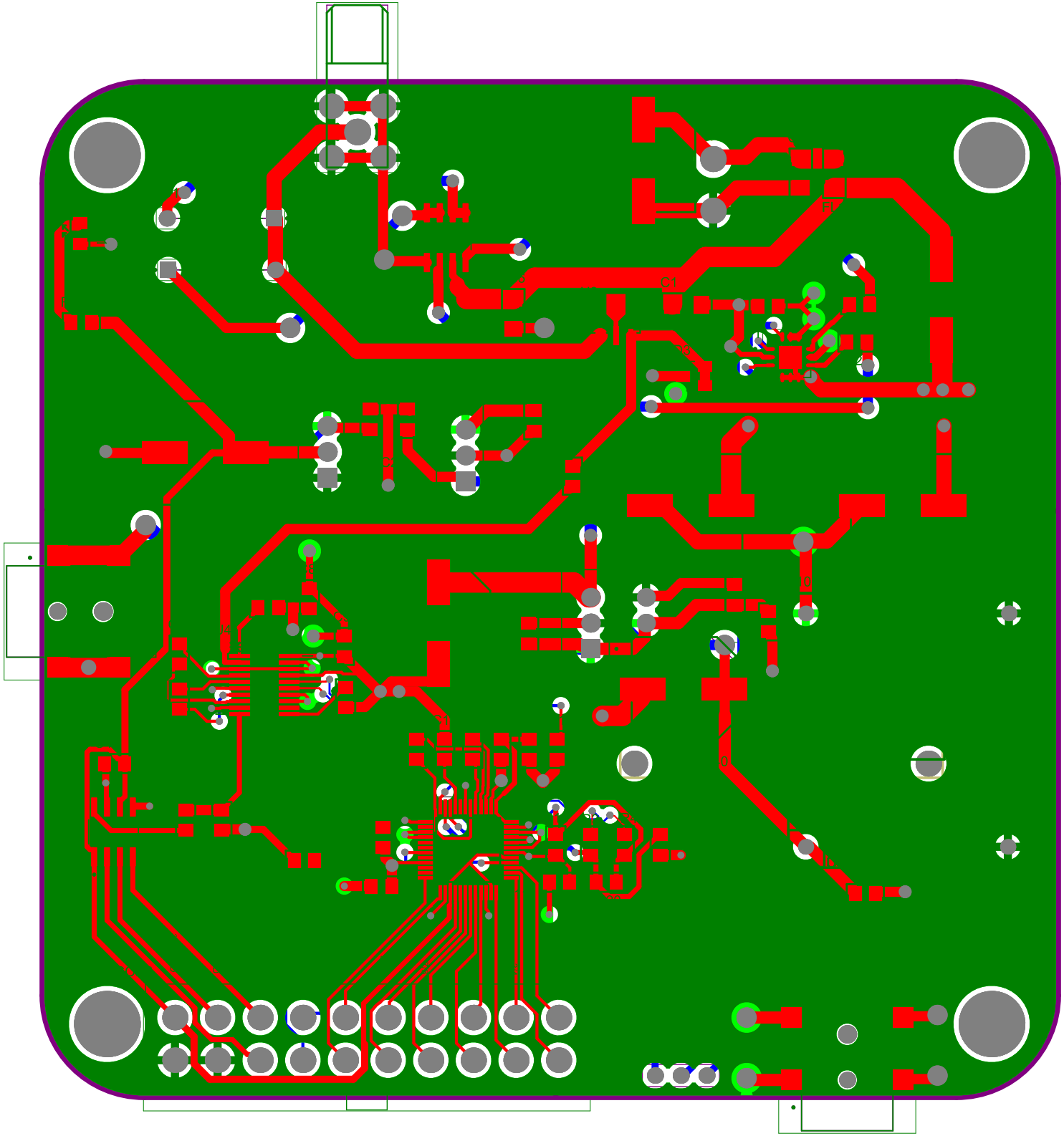
C1
F1
J4
J1