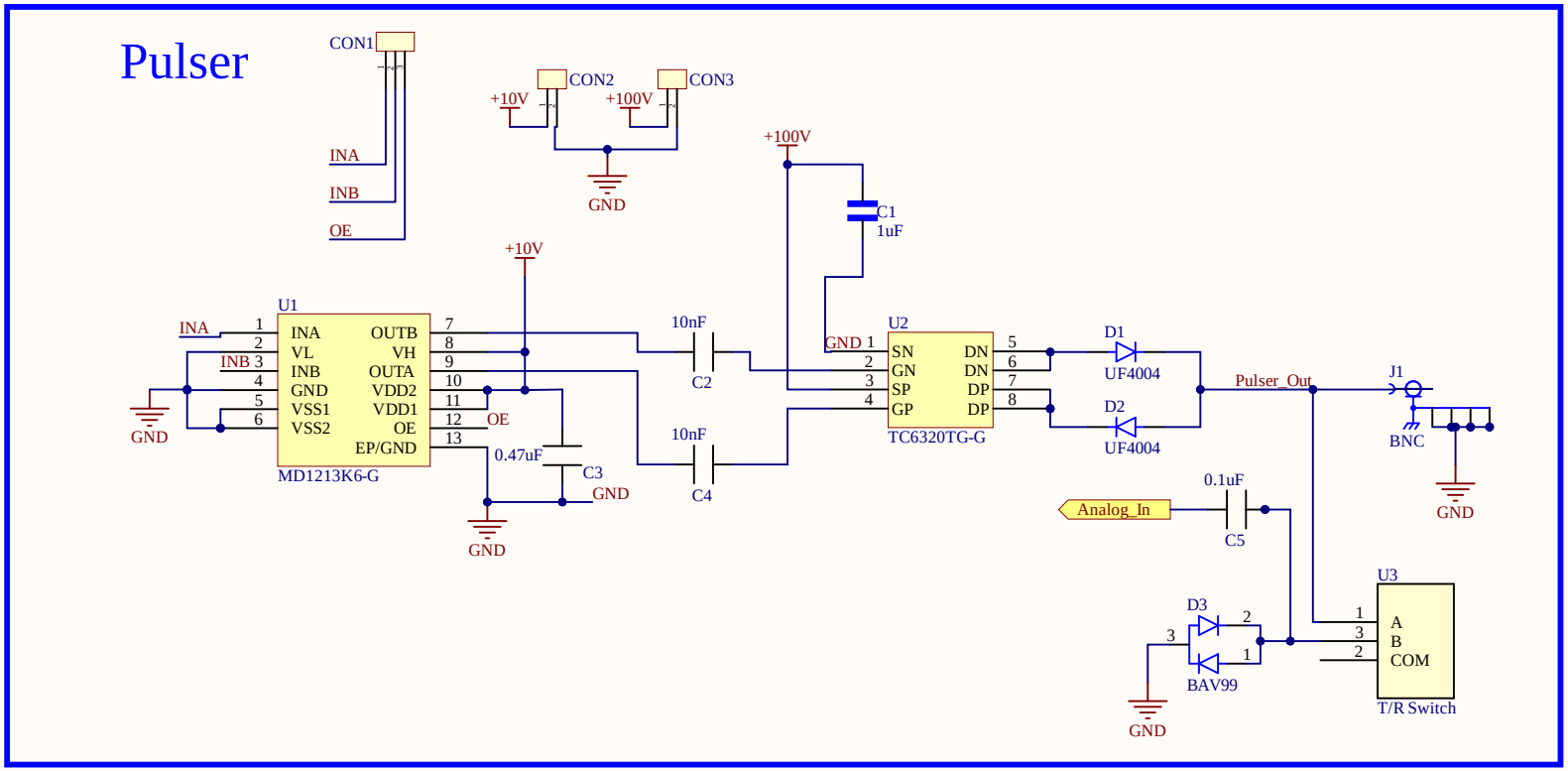

Title		
Size A4	Number	Revision
Date: 3.28.2026		Sheet of
File: C:\FREEUNI\..\Pulser.SchDoc		Drawn By:

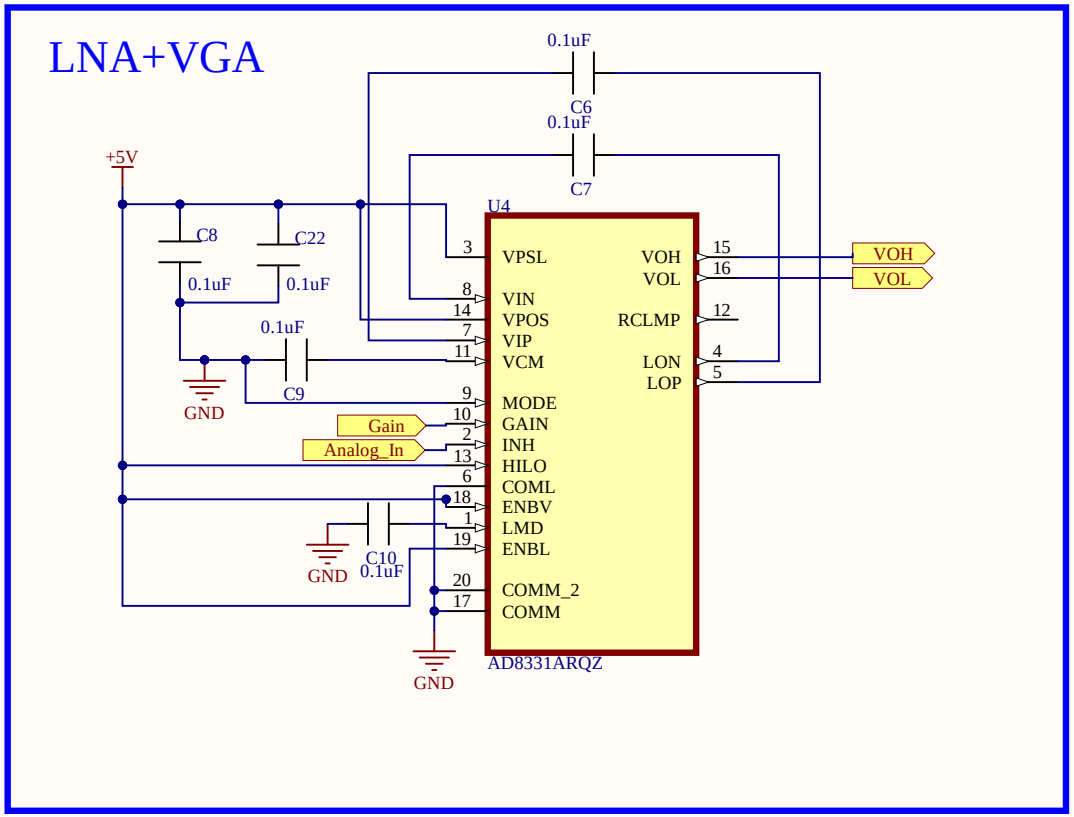

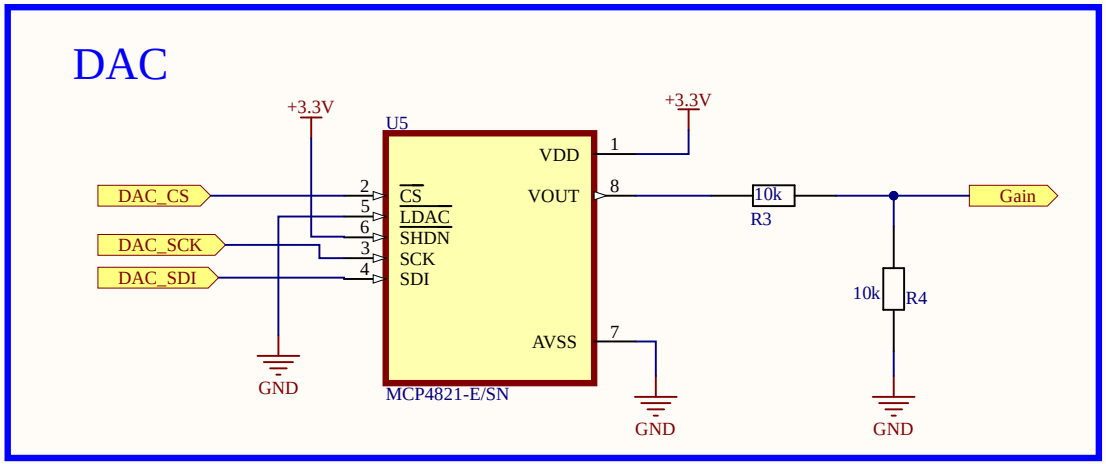

Title		
Size A	Number	Revision
Date: 3.28.2026	Sheet of	
File: C:\FREEUNI\..\Analog Front End.SchDoc	Drawn By:	

ADC + FPGA Connector

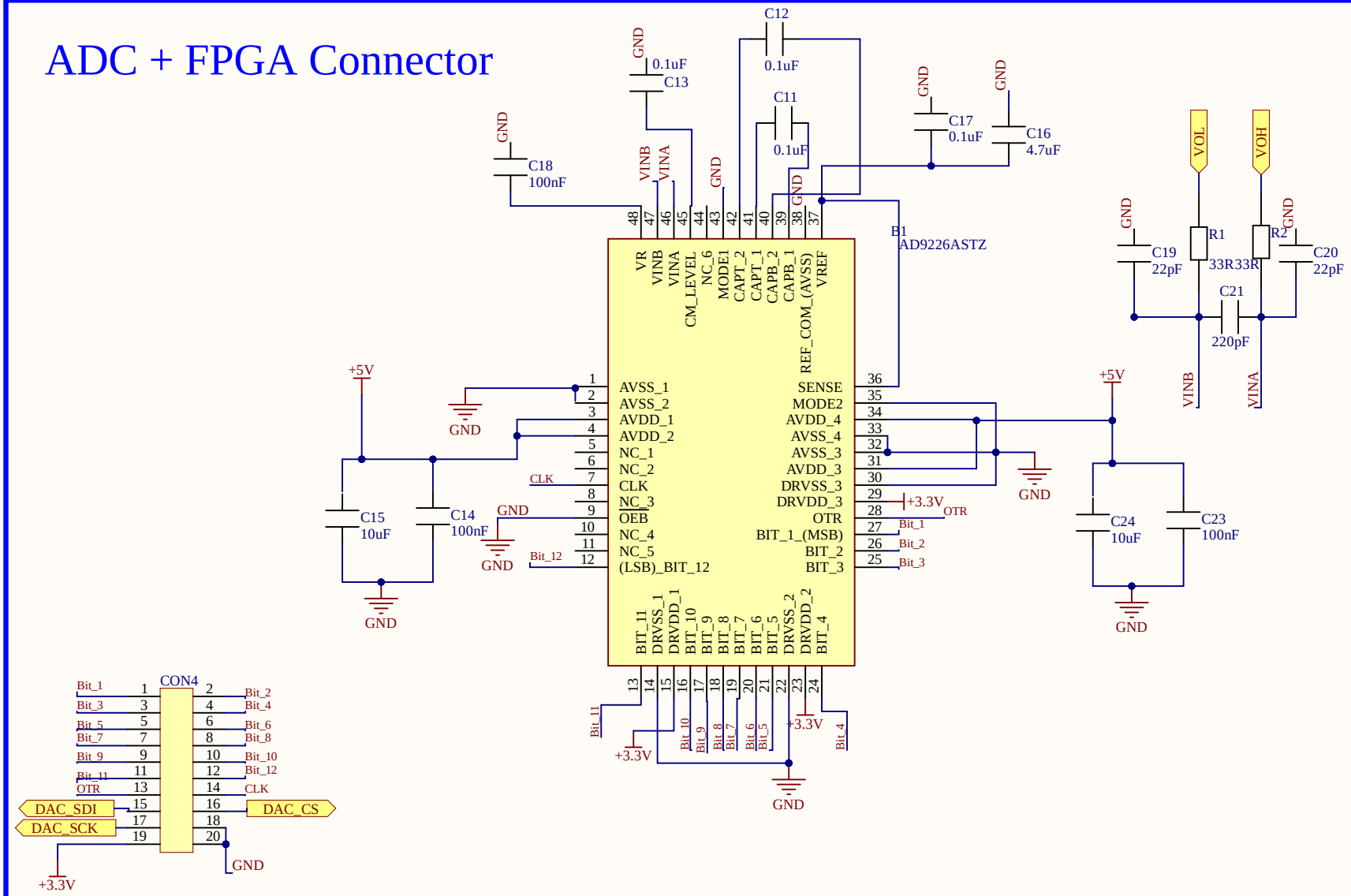

Title		
Size A	Number	Revision
Date: 3.28.2026		Sheet of
File: C:\FREEUNI\..\ADC.SchDoc		Drawn By:

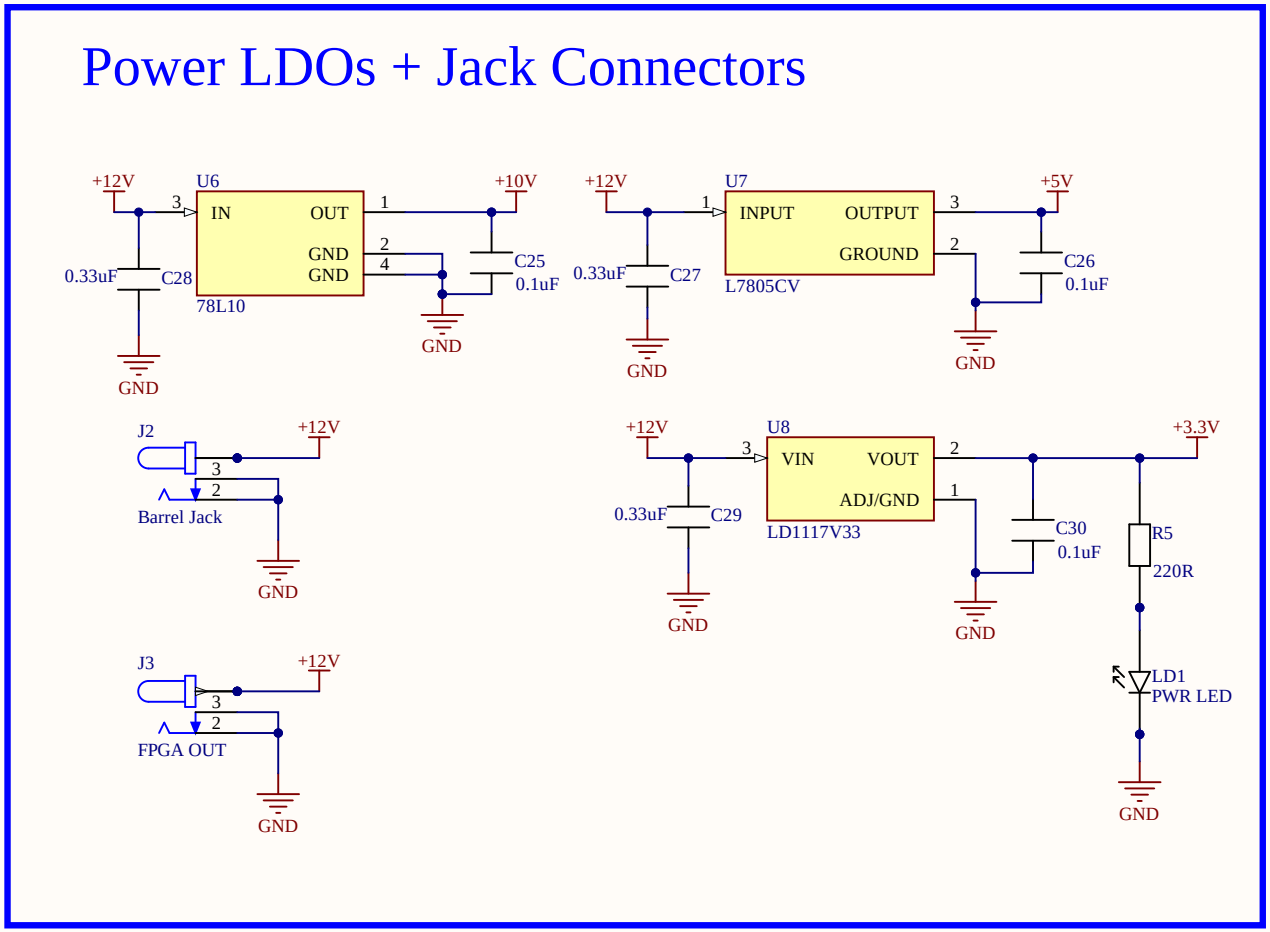

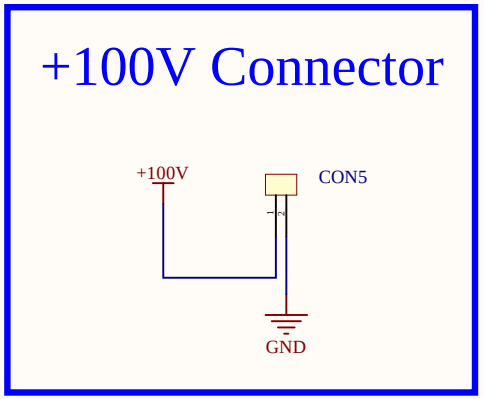

Title		
Size A	Number	Revision
Date: 3.28.2026		Sheet of
File: C:\FREEUNI\..\Power.SchDoc		Drawn By: